TM 55-1520-209-34P-3

DEPARTMENT OF THE ARMY TECHNICAL MANUAL

DS AND GS MAINTENANCE REPAIR PARTS AND SPECIAL TOOLS LIST (INCLUDING DEPOT MAINTENANCE REPAIR PARTS AND SPECIAL TOOLS)

HELICOPTER, CARGO TRANSPORT CH-47A, CH-47B, CH-47C (VERTOL)

FSN 1520-633-6836 (CH-47A)
1520-990-2941 (CH-47B)
1520-871-7308 (CH-47C)

HEADQUARTERS, DEPARTMENT OF THE ARMY
SEPTEMBER 1974

TECHNICAL MANUAL
TM 55-1520-209-34P-3

HEADQUARTERS
DEPARTMENT OF THE ARMY
WASHINGTON, D. C., *13 September 1974*

DIRECT SUPPORT AND GENERAL SUPPORT MAINTENANCE REPAIR PARTS AND SPECIAL TOOLS LIST

(INCLUDING DEPOT MAINTENANCE REPAIR PARTS AND SPECIAL TOOLS)

FOR

HELICOPTER, CARGO TRANSPORT
CH-47A, CH-47B, CH-47C (VERTOL)

FSN 1520-633-6836 (CH-47A)
1520-990-2941 (CH-47B)
1520-871-7308 (CH-47C)

Current as of 28 May 1974

NOTE:

This manual is printed in three volumes, as follows:
TM 55-1520-209-34P-1, consisting of Table of Contents, section I and section II (Functional Groups 01 thru 04, and 06).
TM 55-1520-209-34P-2, consisting of section II (Functional Groups 08 thru 12; 17 thru 19; 30, and 50).
TM 55-1520-209-34P-3, consisting of section II (Functional Groups 60 and 70), section III, and section IV.
The Table of Contents, section I and IV are applicable to the -1, -2, and -3.

*This manual, together with TM 55-1520-209-34P-1, 13 September 1974, and TM 55-1520-209-34P-2, 13 September 1974, supersedes TM 55-1520-209-34P-1, 21 December 1973; TM 55-1520-209-34P-2, 21 December 1973, and TM 55-1520-209-34P-3, 21 December 1973, including all changes.

Digitized by the Internet Archive
in 2025 with funding from
Amateur Radio Digital Communications, Grant 151

https://archive.org/details/tm55152020934p300unse

	(1) SMR CODE	(2) FEDERAL STOCK NUMBER	(3) DESCRIPTION REFERENCE NUMBER & MFR CODE		USABLE ON CODE	(4) UNIT OF MEAS	(5) QTY INC IN UNIT	(6) 30-DAY DS/GS MAINT ALW (a) 1-20	(b) 21-50	(c) 51-100	(7) 1-YR ALWPER 100 EQUIP CNTGCY	(8) DEPOT MAINT ALWPER 100 EQUIP	(9) ILLUSTRATION (a) FIG NO	(b) ITEM NO
			FUNCTIONAL GROUP - 60 BULK MATERIALS		CH-47									
	PA-DZ-Z	1560-736-8866	114R1374-11	77272	CHANNEL,WING.....	ABC	EA					*	BULK	
	PA-OZ-Z	1670-692-7823	48A7141-1	98745	CLAMP ASSEMBLY.....	ABC	EA		*	*	*	*		
	PA-DZ-Z	2835-015-8603	19490-1	55820	RING,OIL SLINGER COMP	ABC	EA					*		
	PA-HZ-Z	2840-781-6677	2-110-128-04	91547	ADAPTER,OIL TRANSFER,AIR..... DIFFUSER COMP	ABC	EA		*	*	*	*		
	PA-HZ-Z	2925-043-1901	114E2005-712	77272	CABLE ASSEMBLY SPEC.....	ABC	EA		*	*	*	*		
	PA-HZ-Z	2925-043-1979	114E2568-1	77272	CABLE ASSEMBLY.....	ABC	EA		*	*	*	*		
	PA-HZ-Z	2925-880-4798	114E2005-711	77272	CABLE ASSEMBLY SPEC.....	ABC	EA		*	*	*	*		
N	PA-FZ-Z	3110-042-4804			BEARING,BALL,AIRFRAME-STEEL,.. SINGLE ROW,INTERNAL SELF-ALIGNING, ANTI-FRICTION,RETAINERLESS TYPE,0.190 IN.BORE DIA, 0.777 IN.OD,0.297 IN.W	ABC	EA		*	*	*	*		
	PB-FZ-Z	3110-068-9395	13889-13830	60038	BEARING,ROLLER,TAPE-COMP.....	ABC	EA		*	*	*	*		
	PA-FZ-Z	3110-293-9225	B542DDFS160	21335	BEARING,BALL,AIRFRAME.....	ABC	EA		*	*	*	*		
R	PA-DZ-Z	5310-566-8869	MS172207	96906	WASHER KEY-STEEL,1.213 IN.... ID,1.458 IN.OD,0.054 IN. THK,1 INTERNAL KEY,13 EXTERNAL KEYS	ABC	EA					*		
	PA-FZ-Z	3120-133-6475	NAS75-3-103	80205	BUSHING,SLEEVE-STEEL,0.191... IN.ID,0.314 IN.OD, 1.089 IN.LG	ABC	EA		*	*	*	*		
	PA-FZ-Z	3120-133-6477	NAS77-4-90	80205	BUSHING,SLEEVE-STEEL BRONZE,.. 0.250 IN.ID,0.376 IN. OD,0.090 IN.LG	ABC	EA		*	*	*	*		
	PA-FZ-Z	3120-133-6478	NAS538B12P094	80205	BUSHING,SLEEVE-BRONZE,0.741.. IN.ID,0.939 IN.OD, 0.990 IN.LG	ABC	EA		*	*	*	*		
	PA-FZ-Z	3120-287-6989	NAS75-4-006	80205	BUSHING,SLEEVE-STEEL ALLOY... 0.250 IN.ID,0.3761 IN.OD, 0.005 IN.LG,1/4 IN. BOLT SIZE	ABC	EA		*	*	*	*		
	PA-FZ-Z	3120-516-1540	NAS77-3-5	80205	BUSHING,SLEEVE-STEEL ALLOY... 0.190 IN.ID,0.437 IN.OD, 0.050 IN.LG,FOR NO.10 BOLT SIZE	ABC	EA		*	*	*	*		
	PA-FZ-Z	3120-516-1803	NAS75-3-003	80205	BUSHING,SLEEVE-STEEL ALLOY... 0.190 IN.ID,0.3136 IN.LG, 0.314 IN.OD,FOR NO.10 BOLT SIZE	ABC	EA		*	*	*	*		
	PA-FZ-Z	3120-516-1852	NAS75-3-018	80205	BUSHING,SLEEVE-STEEL ALLOY,...	ABC	EA		*	*	*	*		

(1) SMR CODE	(2) FEDERAL STOCK NUMBER	(3) DESCRIPTION REFERENCE NUMBER & MFR CODE		USABLE ON CODE	(4) UNIT OF MEAS	(5) QTY INC IN UNIT	(6) 30-DAY DS/GS MAINT ALW (a) 1-20	(b) 21-50	(c) 51-100	(7) 1-YR ALWPER 100 EQUIP CNTGCY	(8) DEPOT MAINT ALWPER 100 EQUIP	(9) ILLUSTRATION (a) FIG NO	(b) ITEM NO
		FUNCTIONAL GROUP - 60	BULK MATERIALS	CH-47									
			CONTINUED CADMIUM PLATED,0.190 IN.ID, 0.314 IN.OD,0.563 IN.LG									BULK	
PA-FZ-Z	3120-517-8385	NAS77-3-21	80205 BUSHING,SLEEVE-STEEL BRONZE,.. 0.190 IN.ID,0.314 IN. OD,0.210 IN.LG	ABC	EA		*	*	*		*		
PA-DZ-Z	3120-517-8413	NAS75-4-017	80205 BUSHING,SLEEVE-STEEL ALLOY,.. 0.250 IN.ID,0.376 IN.OD, 17/32 IN.LG,FOR 1/4 IN.BOLT SIZE	ABC	EA		*	*	*		*		
PA-FZ-Z	3120-517-8432	NAS75-3-005	80205 BUSHING,SLEEVE-STEEL ALLOY,.. CADMIUM PLATED,0.190 IN.ID, 0.314 IN.OD,5/32 IN.LG	ABC	EA		*	*	*		*		
PA-OZ-Z	3120-540-8747	NAS75-3-016	80205 BUSHING,SLEEVE.....	ABC	EA		*	*	*		*		
PA-FZ-Z	3120-554-4842	NAS77A3-10P	80205 BUSHING,SLEEVE-STEEL,0.625... ID,0.814 IN.OD,5/8 IN. BOLT SIZE	ABC	EA		*	*	*		*		
PA-OZ-Z	3120-585-5839	NAS75-8-016	80205 BUSHING,SLEEVE-STEEL ALLOY,.. CADMIUM PLATED,1/2 IN.ID, 0.627 IN.OD,1/2 IN.LG	ABC	EA		*	*	*		*		
XB-FZ-Z		NAS77A3-25P	80205 BUSHING,SLEEVE.....	ABC	EA								
PA-OZ-Z	3120-661-4131	NAS77-3-25	80205 BUSHING,SLEEVE-STEEL ALLOY,.. CADMIUM PLATED,0.190 IN.ID, 0.314 IN.OD,0.250 IN.LG,FOR NO.10 BOLT SIZE	ABC	EA		*	*	*		*		
XB-FZ-Z		NAS77-4-44	80205 BUSHING,SLEEVE-STEEL ALLOY,.. CADMIUM PLATED,0.250 IN.ID, 0.376 IN.OD,0.440 IN.LG,FOR 1/4 IN.BOLT SIZE	ABC	EA								
PB-OZ-Z	3120-661-4340	NAS77-6-37	80205 BUSHING,SLEEVE-STEEL ALLOY,.. CADMIUM PLATED,0.375 IN.ID, 0.501 IN.OD,0.370 IN.LG,FOR 3/8 IN.BOLT SIZE	ABC	EA		*	*	*		*		
PA-FZ-Z	3120-661-5099	NAS77-4-32	80205 BUSHING,SLEEVE-STEEL ALLOY... CADMIUM PLATED,0.250 IN.ID, 0.376 IN.OD,0.320 IN.LG, FOR 1/4 IN.BOLT SIZE	ABC	EA		*	*	*		*		
PA-FZ-Z	3120-684-2398	NAS75-6-007	80205 BUSHING,SLEEVE.....	ABC	EA		*	*	*		*		
PB-OZ-Z	3120-761-2857	NAS77-6-74	80205 BUSHING,SLEEVE-STEEL ALLOY,.. CADMIUM PLATED,0.375 IN.ID, 0.501 IN.OD,0.740 IN.LG,FOR 3/8 IN.BOLT SIZE	ABC	EA		*	*	*		*		
PA-OZ-Z	3120-807-2307	NAS75-3-020	80205 BUSHING,SLEEVE-STEEL ALLOY,.. CADMIUM PLATED,0.190 IN.ID, 0.314 IN.OD,5/8 IN.LG,FOR NO.10 BOLT SIZE	ABC	EA		*	*	*		*		
PA-FZ-Z	3120-839-7093	NAS77A5-19	80205 BUSHING,SLEEVE-BRONZE,0.313.. IN.ID,0.562 IN.OD,0.190 IN.LG,FOR 5/16 IN.BOLT	ABC	EA		*	*	*		*		
PA-FZ-Z	3120-849-4507	VS15102-8-50	77272 BUSHING,SLEEVE.....	ABC	EA		*	*	*		*		

(1) SMR CODE	(2) FEDERAL STOCK NUMBER	(3) DESCRIPTION REFERENCE NUMBER & MFR CODE			USABLE ON CODE CH-47	(4) UNIT OF MEAS	(5) QTY INC IN UNIT	(6) 30-DAY DS/GS MAINT ALW (a) 1-20	(b) 21-50	(c) 51-100	(7) 1-YR ALWPER 100 EQUIP CNTGCY	(8) DEPOT MAINT ALWPER 100 EQUIP	(9) ILLUSTRATION (a) FIG NO	(b) ITEM NO
		FUNCTIONAL GROUP - 60	BULK MATERIALS											
PA-FZ-Z	3120-853-4151	NAS76A12-014	80205	BUSHING,SLEEVE-ALUMINUM..... BRONZE,0.750 IN.ID,0.9393 IN.OD,0.4375 IN.LG	ABC	EA		*	*	*		*	BULK	
PA-FZ-Z	3120-881-1297	NAS77-7-19	80205	BUSHING,SLEEVE-STEEL ALLOY,.. 0.4375 IN.ID,0.5638 IN. OD,0.190 IN.LG	ABC	EA		*	*	*		*		
PA-FZ-Z	3120-931-4790	NAS77-7-118	80205	BUSHING,SLEEVE-STEEL ALLOY,.. CADMIUM PLATED,0.438 IN.ID, 0.564 IN.OD,1.180 IN.LG,FOR 7/16 IN.BOLT SIZE	ABC	EA		*	*	*		*		
PA-OZ-Z	3120-944-2918	NAS75-5-030	80205	BUSHING,SLEEVE-STEEL,0.313... IN.ID,0.439 IN.OD,15/16 IN.LG	ABC	EA		*	*	*		*		
PA-OZ-Z	3120-944-4848	NAS75-3-105	80205	BUSHING,SLEEVE-STEEL ALLOY,.. 0.190 IN.ID,0.314 IN.OD, 1-5/32 IN.LG	ABC	EA		*	*	*		*		
XB-FZ-Z		NAS77-7-27	80205	BUSHING,SLEEVE-STEEL ALLOY,.. 0.438 IN.ID,0.564 IN.OD, 0.270 IN.LG	ABC	EA								
PA-FZ-Z	3120-945-4564	NAS77A3-20	80205	BUSHING,SLEEVE-ALUMINUM..... BRONZE,0.190 IN.ID,0.314 IN.OD,0.200 IN.LG	ABC	EA		*	*	*		*		
PA-OZ-Z	3120-948-9372	NAS77-3-31	80205	BUSHING,SLEEVE-STEEL ALLOY,.. 0.190 IN.ID,0.314 IN.OD, 0.310 IN.LG	ABC	EA		*	*	*		*		
PA-FZ-Z	3120-971-6354	NAS75-12-408	80205	BUSHING,SLEEVE-STEEL ALLOY,.. 0.750 IN.ID,0.939 IN.OD, 4-1/4 IN.LG	ABC	EA		*	*	*		*		
PA-FZ-Z	3120-971-6355	NAS75-10-408	80205	BUSHING,SLEEVE-STEEL ALLOY,.. 0.625 IN.OD,0.814 IN.OD, 4-1/4 IN.LG	ABC	EA		*	*	*		*		
PA-FZ-Z	3120-975-2162	NAS75-8-007	80205	BUSHING,SLEEVE-STEEL ALLOY,.. CADMIUM PLATED,1/2 IN.ID, 0.627 IN.OD,7/32 IN.LG,FOR 1/2 IN.BOLT SIZE	ABC	EA		*	*	*		*		
PA-FZ-Z	3120-975-2165	NAS77-6-455	80205	BUSHING,SLEEVE-STEEL ALLOY,.. CADMIUM PLATED,0.375 IN.ID, 0.501 IN.OD,4.617 IN.LG	ABC	EA		*	*	*		*		
PA-FZ-Z	3120-975-2166	NAS77-8-14	80205	BUSHING,SLEEVE-STEEL ALLOY,.. CADMIUM PLATED,1/2 IN.ID, 0.627 IN.OD,0.140 IN.LG,FOR 1/2 IN.BOLT SIZE	ABC	EA		*	*	*		*		
PA-FZ-Z	3120-997-8990	NAS77-7-13	80205	BUSHING,SLEEVE-STEEL ALLOY,.. CADMIUM PLATED,0.438 IN.ID, 0.564 IN.OD,0.130 IN.LG,FOR 7/16 IN.BOLT SIZE	ABC	EA		*	*	*		*		
PA-OZ-Z	3439-224-3567		81348	SOLDER,TIN ALLOY-ROSIN CURED, 3/32 IN.DIA FED QQ-S-571, TYPE SN60WRAP3,5 LB SPOOL	ABC	LB		*	*	*		*		
PA-FZ-Z	3439-273-8824		81348	ROD,WELDING-NICKEL ALLOY,1/16	ABC	LB		*	*	*		*		

(1) SMR CODE	(2) FEDERAL STOCK NUMBER	(3) DESCRIPTION REFERENCE NUMBER & MFR CODE		USABLE ON CODE CH-47	(4) UNIT OF MEAS	(5) QTY INC IN UNIT	(6) 30-DAY DS/GS MAINT ALW (a) 1-20	(b) 21-50	(c) 51-100	(7) 1-YR ALWPER 100 EQUIP CNTGCY	(8) DEPOT MAINT ALWPER 100 EQUIP	(9) ILLUSTRATION (a) FIG NO	(b) ITEM NO
		FUNCTIONAL GROUP - 60 BULK MATERIALS											
			CONTINUED IN.DIA,36 IN.LG,FOR OXYACETYLENE WELDING, FED QQ-R-571,TYPE 2,CLASS RNICRFE-4									BULK	
PA-FZ-Z	3439-288-1469	81349	ROD,WELDING-CRES,1/8 IN.DIA,.. 36 IN.LG,FOR GAS OR ARC WELDING,MIL-R-5031,CLASS 3	ABC	LB		*	*	*		*		
N PA-HZ-Z	3439-400-1971	1544 75297	FLUX,SOLDERING.....	ABC	PT		*	*	*		*		
PA-HZ-Z	3439-411-5097	81348	SOLDER,TIN ALLOY-COPPER..... 0.032 IN.DIA,FED QQ-S-571	ABC	LB		*	*	*		*		
PA-FZ-Z	3439-464-4774	81349	BRAZING ALLOY,SILVER-1/16 IN. DIA,FED QQ-S-561,5 OZ COIL	ABC	TO		*	*	*		*		
N PA-HZ-Z	3439-141-8244	QQS571 81348	SOLDER,LEAD ALLOY.....	ABC	LB		*	*	*		*		
PA-FZ-Z	3439-935-7863	81349	FLUX,SOLDERING-MIL-F-14256...	ABC	EA		*	*	*		*		
PA-FZ-Z	4010-056-0555	NAS303-22-0201 80205	WIRE ROPE ASSEMBLY,SINGLE.... LEG-STEEL,CARBON,3/32 IN. DIA,20 1/8 IN.LG,USE WITH MS20667 TERMINAL BOTH ENDS	ABC	EA		*	*	*		*		
PA-FZ-Z	4010-222-4474	12Z12100-2 10001	WIRE ROPE,STEEL-CRES,..... 3/32 IN.DIA,MIL-C-5424 COMP	ABC	FT		*	*	*		*		
PA-FZ-Z	4010-222-4482	81349	WIRE ROPE,STEEL-CRES,1/16 IN. DIA,1000 FT,480 LB BREAKING STRENGTH,MIL-C-5424 COMP	ABC	FT		*	*	*		*		
PA-OZ-Z	4010-262-1551	42C14155-1 80244	CHAIN,WELDLESS-ALUMINUM,..... ANODIZED,SAFETY STYLE,30 LB MIN BREAKING STRENGTH, 27-1/2 LINKS PER FT,0.028 IN.THK,FED RR-C-271,TYPE 2, CLASS 6 COMP	ABC	FT		*	*	*		*		
PA-OZ-Z	4010-554-8661	NAS1455B00-6 80205	CHAIN,WELDLESS-BRASS,NICKEL.. PLATED,0.018 IN.THK,27 LINKS PER FT,90 LB MIN BREAKING STRENGTH,FED RR-C-271,TYPE 2,CLASS 6	ABC	IN		*	*	*		*		
PA-FZ-Z	4010-633-5974	EAB210 81996	CHAINHOOKS-C/O 50 FT NO.00... BRONZE CHAIN & 100 NO.95 S HOOKS	ABC	EA		*	*	*		*		
PB-FZ-Z	4010-944-4854	1560CH47-214-4	81996 WIRE ROPE ASSEMBLY.....	ABC	EA		*	*	*		*		
PA-FZ-Z	4010-997-8819	BACC13Y3-65	81205 WIRE STRAND ASSEMBLY.....	ABC	EA		*	*	*		*		
PB-OZ-Z	4020-202-1345	SCD28053-1	80063 ROPE,POLYESTER-3 STRANDS..... 5/8 IN.CIRC,84 FT PER LB, 1000 LB MIN BREAKING STRENGTH,OLIVE DRAB, MIL-R-30500,2700 FT	ABC	FT		*	*	*		*		
PA-OZ-Z	4020-202-1924	81349	TWINE,NYLON-WAXED,3 STRANDS,.. CABLE LAID CONSTRUCTION, BLACK,48 LB BREAKING STRENGTH,2250 FT PER LB,	ABC	LB		*	*	*		*		

(1) SMR CODE	(2) FEDERAL STOCK NUMBER	(3) DESCRIPTION REFERENCE NUMBER & MFR CODE		USABLE ON CODE	(4) UNIT OF MEAS	(5) QTY INC IN UNIT	(6) 30-DAY DS/GS MAINT ALW (a) 1-20	(b) 21-50	(c) 51-100	(7) 1-YR ALWPER 100 EQUIP CNTGCY	(8) DEPOT MAINT ALWPER 100 EQUIP	(9) ILLUSTRATION (a) FIG NO	(b) ITEM NO
		FUNCTIONAL GROUP - 60 BULK MATERIALS		CH-47									
			CONTINUED MIL-T-7130,TYPE P,CLASS 2, 1/2 LB COMP									BULK	
PA-OZ-Z	4020-240-2154	829475	19203 CORD,NYLON-1/16 IN.DIA,100 LB MIN BREAKING STRENGTH, NATURAL COLOR,3 PLIES PER END,MIL-C-5040,TYPE 1,500 YD SPOOL	ABC	YD		*	*	*		*		
PA-FZ-Z	4020-246-0688	SCD86348-1	80063 CORD,NYLON-NYLON CORE,OLIVE.. DRAB,550 LB MIN BREAKING STRENGTH,400 YD SPOOL	ABC	YD		*	*	*		*		
PA-OZ-Z	4020-247-1737		81349 TWINE,VEGETABLE FIBER-12..... PLIES,S-TWIST,900 FT PER LB,70 LB MIN BREAKING STRENGTH,MIL-T-713,TYPE N, CLASS 1,1 LB TUBE	ABC	FT		*	*	*		*		
PA-OZ-Z	4020-262-2019		81349 CORD,NYLON-DYED OLIVE..... GREEN,375 LB MIN BREAKING STRENGTH,MIL-C-5040,TYPE 1, AMEND.1	ABC	YD		*	*	*		*		
PA-OZ-Z	4020-954-1118		81349 TWINE,NYLON-WAXED,3 STRANDS,.. 4 PLIES,1650 FT PER LB,30 LB BREAKING STRENGTH, MIL-T-713,TYPE P,CLASS 1	ABC	EA		*	*	*		*		
PA-OZ-Z	4020-968-1356		81349 ROPE,NYLON-3 STRANDS,3/8 IN.. DIA,600 FT LG,3000 LB BREAKING STRENGTH, MIL-R-17343	ABC	FT		*	*	*		*		
PA-FZ-Z	4030-078-4307	BACF22U3	81205 FERRULE,WIRE ROPE-COPPER..... 0.179 IN.DIA	ABC	EA		*	*	*		*		
PA-FZ-Z	4030-082-0655	MS20667-3	96906 TERMINAL,WIRE ROPE,SWAGING... CRES,0.190 IN.DIA PIVOT HOLE,0.108 IN.W BETWEEN FORKS,1.945 IN.LG,0.218 IN. SLEEVE DIA,0.109 IN.BORE DIA,0.254 IN.H,0.438 IN.W OF TONGUE,FOR 3/32 IN. DIA CABLE	ABC	EA		*	*	*		*		
PA-FZ-Z	4030-082-0656	MS20668-3	96906 TERMINAL,WIRE ROPE,SWAGING... CRES,PASSIVATED,0.190 IN. DIA.PIVOT HOLE,2.043 IN.LG, 0.218 IN.SLEEVE DIA,0.109 IN.BORE DIA,0.103 IN.H, 0.438 IN.W OF TONGUE,FOR 3/32 IN.DIA CABLE	ABC	EA		*	*	*		*		
PA-OZ-Z	4030-273-3081	MS20664C2	96906 BALL END,WIRE,ROPE,SWAGING... CRES,SINGLE SHANK,0.212 IN. BALL DIA,0.269 IN.LG, FOR 1/16 IN.DIA CABLE COMP	ABC	EA		*	*	*		*		
PB-OZ-Z	4030-431-5536	28-1C	76691 SWAGING SLEEVE,WIRE ROPE.....	ABC	EA		*	*	*		*		

(1) SMR CODE	(2) FEDERAL STOCK NUMBER	(3) DESCRIPTION REFERENCE NUMBER & MFR CODE		USABLE ON CODE	(4) UNIT OF MEAS	(5) QTY INC IN UNIT	(6) 30-DAY DS/GS MAINT ALW (a) 1-20	(b) 21-50	(c) 51-100	(7) 1-YR ALWPER 100 EQUIP CNTGCY	(8) DEPOT MAINT ALWPER 100 EQUIP	(9) ILLUSTRATION (a) FIG NO	(b) ITEM NO
		FUNCTIONAL GROUP - 60 BULK MATERIALS		CH-47									
		CONTINUED COPPER,GALVANIZED,3/8 IN.H, 0.251 IN.LG,0.170 IN.W,FOR 1/16 IN.DIA WIRE ROPE COMP										BULK	
PA-FZ-Z	4030-801-5342	NAS1090-1	80205	HOOK,CHAIN.....	ABC	EA		*	*	*		*		
PA-FZ-Z	4030-878-8693	325167	00779	FERRULE,WIRE ROPE.....	ABC	EA		*	*	*		*		
PA-OZ-Z	4030-958-8039	MS20667-4	96906	TERMINAL,WIRE ROPE,SWAGING... CRES,0.190 IN.DIA PIVOT HOLE,0.547 IN.W BETWEEN FORKS,2.352 IN.LG,0.250 IN. SLEEVE DIA,0.141 IN.BORE DIA,0.383 IN.H,0.547 IN.W OF TONGUE,FOR 1/8 IN.DIA CABLE	ABC	EA		*	*	*		*		
PB-OZ-Z	4710-142-3010		81349	TUBE,ALUMINUM ALLOY..... GR6061-T6,SEAMLESS,PLAIN ENDS,1/2 IN.OD,0.035 IN. WALL THK,8 FT TO 12 FT LG, MIL-T-7081	ABC	IN		*	*	*		*		
PA-FZ-Z	4710-203-6244		81349	TUBE,CORROSION RESISTING..... STEEL-COLD DRAWN,COLD FINISHED,SEAMLESS OR BUTT WELDED,PLAIN ENDS,1/2 IN. DIA,0.035 IN.WALL THK,12 FT LG,MIL-T-6845 COMP	ABC	IN		*	*	*		*		
PA-FZ-Z	4710-278-1972		81349	TUBE,CORROSION RESISTING..... STEEL-SEAMLESS,ANNEALED, PLAIN ENDS,3/16 IN.DIA, 0.035 IN.WALL THK, MIL-T-8506 COMP	ABC	EA		*	*	*		*		
C PB-FZ-Z	4710-278-2101		81348	TUBE,ALUMINUM ALLOY..... GR6061-T6,SEAMLESS,0.438 IN.DIA,0.035 IN.WALL THK,FED WW-T-700/6	ABC	IN		*	*	*		*		
PA-FZ-Z	4710-278-2907		81349	TUBE,CORROSION RESISTING..... STEEL-SEAMLESS,ANNEALED, COLD FINISHED,BOTH ENDS PLAIN,0.375 IN.DIA,0.049 IN.WALL THK,10 FT TO 12 FT LG,MIL-T-8606,TYPE 1, COMPOSITION G321	ABC	IN		*	*	*		*		
PA-FZ-Z	4710-278-3281		81349	TUBE,CORROSION RESISTING..... STEEL-SEAMLESS,COLD FINISHED,3/8 IN.OD,0.028 IN.WALL THK,10 FT TO 12 FT LG,PLAIN END,MIL-T-6845 COMP	ABC	EA		*	*	*		*		
PB-FZ-Z	4710-278-3282	9031917	18876	TUBE,CORROSION RESISTING..... STEEL-SEAMLESS,COLD FINISH,	ABC	EA		*	*	*		*		

(1) SMR CODE	(2) FEDERAL STOCK NUMBER	(3) DESCRIPTION REFERENCE NUMBER & MFR CODE			USABLE ON CODE	(4) UNIT OF MEAS	(5) QTY INC IN UNIT	(6) 30-DAY DS/GS MAINT ALW (a) 1-20	(b) 21-50	(c) 51-100	(7) 1-YR ALWPER 100 EQUIP CNTGCY	(8) DEPOT MAINT ALWPER 100 EQUIP	(9) ILLUSTRATION (a) FIG NO	(b) ITEM NO
		FUNCTIONAL GROUP - 60	BULK MATERIALS		CH-47									
				CONTINUED									BULK	
				PLAIN ENDS,3/8 IN.DIA,0.035 IN.WALL THK,10 FT TO 12 FT LG,MIL-T-6845 COMP										
PA-OZ-Z	4710-278-3291		81349	TUBE,CORROSION RESISTING..... STEEL-SEAMLESS,COLD FINISHED,PLAIN ENDS,0.250 IN.DIA,10 FT TO 12 FT LG, MIL-T-6845 COMP	ABC	EA		*	*	*		*		
PA-OZ-Z	4710-278-3294	MS21921-4D	81349	TUBE,CORROSION RESISTING..... STEEL-RD,PLAIN ENDS, SEAMLESS,COLD FINISH,1/4 IN.OD,0.028 IN.WALL THK,10 FT THRU 12 FT LG,MIL-T-6845 COMP	ABC	EA		*	*	*		*		
PA-FZ-Z	4710-278-3302		81349	TUBE,CORROSION RESISTANT..... 5/8 IN.DIA,0.049 IN.WALL THK,MIL-T-6845	ABC	IN		*	*	*		*		
PA-DZ-Z	4710-278-6381		81348	TUBE,ALUMINUM ALLOY..... SEAMLESS,0.750 IN.DIA,0.065 IN.WALL THK,8 FT TO 12 FT LG,FED WW-T-785B,TYPE 1	ABC	EA						*		
PA-OZ-Z	4710-278-6398	2735-5	01634	TUBE,ALUMINUM ALLOY-GR5052-0, ANNEALED,SEAMLESS,PLAIN ENDS,1/4 IN.OD,0.035 IN. WALL THK,10 FT TO 12 FT LG, FED WW-T-700/4 COMP	ABC	IN		*	*	*		*		
PB-FZ-Z	4710-278-6434		81348	TUBE,ALUMINUM ALLOY..... GR6061-T6,SEAMLESS,0.650 IN.DIA,0.058 IN.WALL THK, FED WW-T-700/6,TYPE 1	ABC	IN		*	*	*		*		
PA-FZ-Z	4710-278-8723		81348	TUBE,ALUMINUM ALLOY-GR5052-0, SEAMLESS,ANNEALED,PLAIN ENDS,1.00 IN.DIA,0.035 IN. WALL THK,8 FT TO 12 FT LG, 250 PSI WORKING PRESSURE, FED WW-T-700/4,TYPE 1 COMP	ABC	IN		*	*	*		*		
PA-FZ-Z	4710-278-8724		81348	TUBE,ALUMINUM ALLOY-GR5052-0, SEAMLESS,ANNEALED,PLAIN ENDS,1 IN.DIA,0.049 IN.WALL THK,8 FT TO 12 FT LG,FED WW-T-700/4,TYPE 1 COMP	ABC	IN		*	*	*		*		
PA-FZ-Z	4710-278-8726	248639	36378	TUBE,ALUMINUM ALLOY-ANNEALED, SEAMLESS,BOTH ENDS PLAIN, 0.375 IN.OD,0.035 IN.WALL THK,8 FT TO 12 FT LG, FED WW-T-700/4 TYPE 1 COMP	ABC	EA		*	*	*		*		
PA-FZ-Z	4710-278-8733		81348	TUBE,ALUMINUM ALLOY-SEAMLESS, COLD WORKED,BOTH ENDS	ABC	IN		*	*	*		*		

(1) SMR CODE	(2) FEDERAL STOCK NUMBER	(3) DESCRIPTION REFERENCE NUMBER & MFR CODE		USABLE ON CODE CH-47	(4) UNIT OF MEAS	(5) QTY INC IN UNIT	(6) 30-DAY DS/GS MAINT ALW (a) 1-20	(b) 21-50	(c) 51-100	(7) 1-YR ALWPER 100 EQUIP CNTGCY	(8) DEPOT MAINT ALWPER 100 EQUIP	(9) ILLUSTRATION (a) FIG NO	(b) ITEM NO
		FUNCTIONAL GROUP - 60	BULK MATERIALS										
			CONTINUED PLAIN,1/2 IN.DIA,0.035 IN. WALL THK,8 FT TO 12 FT LG, 250 PSI WP,FED WW-T-700/3, TYPE 1,TEMPER T3									BULK	
PA-FZ-Z	4710-278-8740	81348	TUBE,ALUMINUM ALLOY-GR5052-0, SEAMLESS,ANNEALED,PLAIN ENDS,5/8 IN.DIA,0.049 IN. WALL THK,8 FT TO 12 FT LG, FED WW-T-700/4,TYPE 1	ABC	IN		*	*	*		*		
PB-FZ-Z	4710-278-8742	41384209 81755	TUBE,ALUMINUM ALLOY-GR5052-0, SEAMLESS,ANNEALED,PLAIN ENDS,5/8 IN.DIA,0.035 IN. WALL THK,8 FT TO 12 FT LG, FED WW-T-700/4 COMP	ABC	IN		*	*	*		*		
PA-OZ-Z	4710-279-0020	81349	TUBE,ALUMINUM ALLOY..... SEAMLESS,PLAIN ENDS,5/8 IN. DIA,0.035 IN.WALL THK,10 FT TO 12 FT LG,3000 PSI WP, MIL-T-7081-T6 COMP	ABC	IN		*	*	*		*		
PB-FZ-Z	4710-279-0897	41374249 81755	TUBE,ALUMINUM ALLOY..... GR2024-T3,SEAMLESS,COLD WORKED,BOTH ENDS PLAIN,250 PSI HYDROSTATIC TEST PRESSURE RATING,0.750 IN. ID,0.035 IN.WALL THK,8 FT TO 12 FT LG COMP	ABC	EA		*	*	*		*		
PB-FZ-Z	4710-279-0899	81348	TUBE,ALUMINUM ALLOY-SEAMLESS, COLD WORKED,BOTH ENDS PLAIN,0.625 IN.DIA,0.065 IN.WALL THK,8 FT TO 12 FT LG,FED WW-T-700/3,TYPE 1, TEMPER T3	ABC	EA		*	*	*		*		
PA-FZ-Z	4710-279-0917	81348	TUBE,ALUMINUM ALLOY-HEAT..... TREATED,COLD WORKED, SEAMLESS,PLAIN ENDS,1/4 IN. DIA,0.035 IN.WALL THK,8 FT TO 12 FT LG,FED WW-T-700/3, TYPE 1,T3	ABC	EA		*	*	*		*		
PA-FZ-Z	4710-279-0950	81348	TUBE,ALUMINUM ALLOY-GR5052-0, ANNEALED,SEAMLESS,PLAIN ENDS,1/2 IN.DIA,0.035 IN. WALL THK,8 FT TO 12 FT LG, FED WW-T-700/4,TYPE 1 COMP	ABC	IN		*	*	*		*		
PB-FZ-Z	4710-289-2780	81349	TUBE,ALUMINUM ALLOY..... GR6061-T6,SEAMLESS,3000 PSI WP,0.250 IN.OD,0.028 IN. THK,MIL-T-7081	ABC	IN		*	*	*		*		
PA-FZ-Z	4710-289-2781	81349	TUBE,ALUMINUM ALLOY.....	ABC	IN		*	*	*		*		

(1) SMR CODE	(2) FEDERAL STOCK NUMBER	(3) DESCRIPTION REFERENCE NUMBER & MFR CODE		USABLE ON CODE	(4) UNIT OF MEAS	(5) QTY INC IN UNIT	(6) 30-DAY DS/GS MAINT ALW (a) 1-20	(b) 21-50	(c) 51-100	(7) 1-YR ALWPER 100 EQUIP CNTGCY	(8) DEPOT MAINT ALWPER 100 EQUIP	(9) ILLUSTRATION (a) FIG NO	(b) ITEM NO
		FUNCTIONAL GROUP - 60	BULK MATERIALS	CH-47									
			CONTINUED GR6061-T6,SEAMLESS,PLAIN ENDS,3000 PSI WP,0.250 IN. OD,0.035 IN.WALL THK,10 FT TO 12 FT LG,MIL-T-7081 COMP									BULK	
PA-FZ-Z	4710-289-2914		81349 TUBE,STEEL-SEAMLESS,..... ANNEALED,3/8 IN.OD,0.035 IN.WALL THK,MIL-T-8504	ABC	EA		*	*	*		*		
C PA-FZ-Z	4710-420-4789		81349 TUBE,CORROSION RESISTING..... STEEL-SEAMLESS,1/2 IN.OD, 0.042 IN.WALL THK,10 FT TO 12 FT LG,MIL-T-6845 COMP	ABC	FT		*	*	*		*		
PA-FZ-Z	4710-541-4932		81348 TUBE,ALUMINUM ALLOY-GR5052-O, ANNEALED,SEAMLESS,PLAIN ENDS,1/4 IN.DIA,0.028 IN. WALL THK,10 FT TO 12 FT LG, FED WW-T-700/4,TYPE 1 COMP	ABC	IN		*	*	*		*		
PA-FZ-Z	4710-595-2413		81348 TUBE ALUMINUM ALLOY-GR5052-O, SEAMLESS,ANNEALED,PLAIN ENDS,1/2 IN.DIA,0.028 IN. WALL THK,10 FT TO 12 FT LG, FED WW-T-700/4,TYPE 1	ABC	IN		*	*	*		*		
PB-FZ-Z	4710-595-2416		81348 TUBE,ALUMINUM ALLOY-GR5052-O, ANNEALED,SEAMLESS,PLAIN ENDS,0.625 IN.DIA,0.028 IN. WALL THK,10 FT TO 12 FT LG, FED WW-T-700/4 COMP	ABC	EA		*	*	*		*		
PB-OZ-Z	4710-684-5074		81349 TUBE,ALUMINUM ALLOY..... GR6061-T6,SEAMLESS,BOTH ENDS PLAIN,0.375 IN.DIA, 0.035 IN.WALL THK,12 FT LG, MIL-T-7081 COMP	ABC	IN		*	*	*		*		
PB-FZ-Z	4710-728-8405		81348 TUBE,ALUMINUM ALLOY..... SEAMLESS,PLAIN END,1/4 IN. DIA,0.032 IN.WALL THK,FED WW-T-700/4 COMP	ABC	IN		*	*	*		*		
PB-FZ-Z	4710-731-1546		81349 ALUMINUM ALLOY TUBE..... MILT7081-6061T6-1875-035	ABC	IN		*	*	*		*		
PA-FZ-Z	4710-813-9872		81349 TUBE,CORROSION RESISTING..... STEEL-SEAMLESS,1/2 IN.OD, 0.049 IN.WALL THK,10 FT TO 12 FT LG,MIL-T-6845 COMP	ABC	EA		*	*	*		*		
PA-OZ-Z	4710-933-4415	PE16	23356 TUBING PLASTIC-POLYETHYLENE.. RIGID,MILK WHITE,0.149 IN. ID,0.375 IN.OD,1500 IN.LG, PINCHED CLOSED ON BOTH ENDS,CUT AT TIME OF USE,	ABC	EA		*	*	*		*		

(1) SMR CODE	(2) FEDERAL STOCK NUMBER	(3) DESCRIPTION REFERENCE NUMBER & MFR CODE		USABLE ON CODE CH-47	(4) UNIT OF MEAS	(5) QTY INC IN UNIT	(6) 30-DAY DS/GS MAINT ALW (a) 1-20	(b) 21-50	(c) 51-100	(7) 1-YR ALWPER 100 EQUIP CNTGCY	(8) DEPOT MAINT ALWPER 100 EQUIP	(9) ILLUSTRATION (a) FIG NO	(b) ITEM NO
		FUNCTIONAL GROUP - 60 BULK MATERIALS										BULK	
				CONTINUED									
				25 PER BAG									
PA-OZ-Z	4710-933-4417	PE20-25	23356	TUBING,PLASTIC-POLYETHYLENE,.. RIGID,MILK WHITE,0.124 IN. ID,0.250 IN.OD,20 IN.LG, PINCHED CLOSED ON BOTH ENDS,CUT AT TIME OF USE	ABC	EA	*	*	*		*		
PA-FZ-Z	4710-957-6693		81349	TUBE,CORROSION RESISTING..... STEEL-SEAMLESS,ANNEALED, 0.148 IN.OD,0.015 IN.WALL THK,5 FT TO 24 FT LG,TYPE 1,MATERIAL G321,MIL-T-8606 COMP	ABC	IN	*	*	*		*		
PA-FZ-Z	4720-074-0963	R23100-5	50599	SLEEVE,ANTI-CHAFE COMP	ABC	FT	*	*	*		*		
PB-FZ-Z	4720-181-8687		81349	TUBING RUBBER-0.675 IN.ID,... 0.063 IN.W, MIL-S-6855CL2GR40	ABC	FT	*	*	*		*		
PB-OZ-Z	4720-189-9715		81348	TUBING,RUBBER-SYNTHETIC,1/4.. IN.ID,0.125 IN.WALL THK,FED ZZ-T-831,GRADE B COMP	ABC	IN	*	*	*		*		
PB-FZ-Z	4720-225-9109	NAS520-20-96	80205	HOSE,AIR DUCT-PLAIN ENDS,.... 2-1/2 IN.ID,0.096 IN.WALL THK,2 FT LG,20 PSI WORKING PRESSURE,MINUS 65 DEG F TO PLUS 450 DEG F DESIGNED TEMP RANGE COMP	ABC	EA	*	*	*		*		
PA-FZ-Z	4720-225-9110	NAS520-14-96	80205	HOSE,AIR DUCT-PLAIN ENDS,.... 1-3/4 IN.ID,0.096 IN.WALL THK,2 FT LG COMP	ABC	EA	*	*	*		*		
N PA-FZ-Z	5320-069-0781	NAS1669-3L6	81205	RIVET,BLIND.....	ABC	EA	*	*	*		*		
PB-FZ-Z	4720-225-9111	NAS520-28-96	80205	HOSE,AIR DUCT-PLAIN ENDS,.... 3-1/2 IN.ID,0.096 IN.WALL THK,2 FT LG COMP	ABC	EA	*	*	*		*		
PB-FZ-Z	4720-225-9112	NAS520-34-96	80205	HOSE,AIR DUCT-PLAIN ENDS,.... 4.250 IN.ID,0.096 IN.WALL THK,2 FT LG COMP	ABC	EA	*	*	*		*		
PB-FZ-Z	4720-225-9113	NAS520-4-96	80205	HOSE,AIR DUCT-PLAIN ENDS,.... 0.500 IN.ID,0.096 IN.WALL THK,2 FT LG COMP	ABC	EA	*	*	*		*		
PB-FZ-Z	4720-225-9114	NAS520-58-96	80205	HOSE,AIR DUCT-PLAIN ENDS,.... 7.250 IN.ID,0.096 IN.WALL THK,2 FT LG COMP	ABC	EA	*	*	*		*		
PB-FZ-Z	4720-225-9115	NAS520-60-96	80205	HOSE,AIR DUCT-PLAIN ENDS,.... 7.500 IN.ID,0.096 IN.WALL THK,2 FT LG COMP	ABC	EA	*	*	*		*		
C PA-OZ-Z	4720-231-2483		81348	TUBING,RUBBER-NATURAL,..... OXIDATION RESISTANT,3/8 IN. ID,0.125 IN.WALL THK, 12 FT LG,FED ZZ-T-831 GRADE A,HEAVY WALL	ABC	FT	*	*	*		*		
PB-FZ-Z	4720-235-1775		81348	TUBING,RUBBER-SYNTHETIC,.....	ABC	EA	*	*	*		*		

(1) SMR CODE	(2) FEDERAL STOCK NUMBER	(3) DESCRIPTION REFERENCE NUMBER & MFR CODE		USABLE ON CODE	(4) UNIT OF MEAS	(5) QTY INC IN UNIT	(6) 30-DAY DS/GS MAINT ALW (a) 1-20	(b) 21-50	(c) 51-100	(7) 1-YR ALWPER 100 EQUIP CNTGCY	(8) DEPOT MAINT ALWPER 100 EQUIP	(9) ILLUSTRATION (a) FIG NO	(b) ITEM NO
		FUNCTIONAL GROUP - 60 BULK MATERIALS		CH-47									
			CONTINUED									BULK	
			BLACK,HEAVY WALL,FLAME RESISTANT,700 PSI TENSILE STRENGTH,3/4 IN.ID,1/8 IN. WALL THK,FED ZZ-T-831B GRADE B,TYPE 2 COMP										
PA-OZ-Z	4720-235-1778	81348	TUBING,RUBBER-SYNTHETIC,5/8.. IN.ID,0.125 IN.WALL THK, FLAME RESISTANT,FED ZZ-T-831,TYPE 2,GRADE 8	ABC	IN		*	*	*		*		
PB-FZ-Z	4720-246-4354	81349	TUBING,RUBBER-SYNTHETIC,..... 1/2 IN.ID,0.063 IN.WALL THK,MIL-R-6855,CLASS 2, GRADE 60	ABC	IN		*	*	*		*		
PB-OZ-Z	4720-271-9841	81349	TUBING,RUBBER-0.313 IN.ID.... 1/8 IN.WALL THK,MIL-S-6855	ABC	IN		*	*	*		*		
PA-OZ-Z	4720-277-2889	81349	TUBE,RUBBER-SYNTHETIC,7/16... IN.ID,3/32 IN.WALL THK,8 FT LG,OIL RESISTANT, MIL-R-6855,CLASS 2,GRADE 60	ABC	IN		*	*	*		*		
C PC-OZ-Z	4720-278-1096	R300-3-8	73842 HOSE,RUBBER-SYNTHETIC INNER.. SURFACE,MOLDED NEOPRENE RUBBER OUTER COVERING, SMOOTH BORE,0.375 IN.ID, 0.750 IN.OD,1000 PSI BURST PRESSURE,MIL-H-6000	ABC	IN		*	*	*		*		
PB-OZ-Z	4720-278-1107		81349 HOSE,RUBBER-SYNTHETIC RUBBER. INNER SURFACE,MOLDED NEOPRENE RUBBER OUTER COVERING,SMOOTH BORE,0.625 IN.ID,1.00 IN.OD,1000 PSI BURST PRESSURE,MIL-H-6000 COMP	ABC	IN		*	*	*		*		
PB-OZ-Z	4720-278-1111	R300-1-1-2	73842 HOSE,RUBBER-SYNTHETIC RUBBER. INNER SURFACE,MOLDED NEOPRENE RUBBER OUTER COVERING,SMOOTH BORE,1-1/2 IN.ID,1.875 IN.OD,800 PSI BURST PRESSURE,MIL-H-6000 COMP	ABC	EA		*	*	*		*		
PC-FZ-Z	4720-278-1323		81349 HOSE,RUBBER-SYNTHETIC,SMOOTH. BORE,0.035 IN.ID,0.671 IN. OD,9.000 PSI BURST PRESSURE,MIL-H-8794 COMP	ABC	IN		*	*	*		*		
PA-FZ-Z	4720-421-1321	676-8	00624 HOSE,TEFLON COMP	ABC	IN		*	*	*		*		
PC-FZ-Z	4720-540-1368	223DC14	93230 HOSE-RUBBER-SYNTHETIC RUBBER. INNER SURFACE,ONE BRAID COTTON OUTER COVERING, SMOOTH BORE,1/2 IN.ID,1750 PSI WORKING PRESSURE,7000	ABC	IN		*	*	*		*		

(1) SMR CODE	(2) FEDERAL STOCK NUMBER	(3) DESCRIPTION REFERENCE NUMBER & MFR CODE		USABLE ON CODE	(4) UNIT OF MEAS	(5) QTY INC IN UNIT	(6) 30-DAY DS/GS MAINT ALW (a) 1-20	(b) 21-50	(c) 51-100	(7) 1-YR ALW PER 100 EQUIP CNTGCY	(8) DEPOT MAINT ALW PER 100 EQUIP	(9) ILLUSTRATION (a) FIG NO	(b) ITEM NO
		FUNCTIONAL GROUP - 60 BULK MATERIALS		CH-47									
			CONTINUED PSI BURST PRESSURE,MINUS 65 DEG F TO PLUS 325 DEG F TEMP RANGE,MIL-H-8794, SIZE 10 COMP									BULK	
PA-OZ-Z	4720-540-3644		81349 TUBING,RUBBER-SYNTHETIC,BLACK W/WHITE MARKINGS,OIL RESISTANT,3/8 IN.ID,1/8 IN. WALL THK,MIL-R-6855,CLASS 2 GRADE 40 COMP	ABC	IN		*	*	*		*		
PA-FZ-Z	4720-540-6434	MS87027-16	96906 HOSE,NONMETALLIC-SYNTHETIC... RUBBER INNER SURFACE, BRAIDED CRES WIRE OUTER COVERING,FUEL & OIL RESISTANT,0.875 IN.ID,1.156 IN.OD,1000 PSI WORKING PRESSURE,2500 PSI BURST PRESSURE,MINUS 40 TO PLUS 300 DEG F TEMP RANGE COMP	ABC	IN		*	*	*		*		
PA-FZ-Z	4720-541-8328	MS87027-10	96906 HOSE,NONMETALLIC-SYNTHETIC... RUBBER INNER SURFACE, BRAIDED CRES WIRE OUTER COVERING,FUEL & OIL RESISTANT,0.562 IN.ID,0.797 IN.OD,1000 PSI OPERATING PRESSURE,5000 PSI BURST PRESSURE,MINUS 40 TO PLUS 300 DEG F TEMP RANGE COMP	ABC	IN		*	*	*		*		
PA-FZ-Z	4720-541-9281	MS87027-4	96906 HOSE,NONMETALLIC-SYNTHETIC... RUBBER INNER SURFACE, BRAIDED CRES WIRE OUTER COVERING,FUEL & OIL RESISTANT,0.219 IN.ID,0.438 IN.OD,1250 PSI WORKING PRESSURE,5000 PSI BURST PRESSURE,MINUS 40 TO PLUS 300 DEG F TEMP RANGE COMP	ABC	EA		*	*	*		*		
PA-FZ-Z	4720-555-3499	MS87027-12	96906 HOSE,NONMETALLIC-SYNTHETIC... RUBBER INNER SURFACE, BRAIDED CRES WIRE OUTER COVERING,FUEL & OIL RESISTANT,0.688 IN.ID,0.938 IN.OD,1250 PSI WORKING PRESSURE,3750 PSI BURST PRESSURE,MINUS 40 TO PLUS 300 DEG F TEMP RANGE COMP	ABC	IN		*	*	*		*		
PA-FZ-Z	4720-580-6618	MS87027-8	96906 HOSE,NONMETALLIC-SYNTHETIC... RUBBER INNER SURFACE, BRAIDED CRES WIRE OUTER COVERING,SMOOTH BORE,FUEL &	ABC	IN		*	*	*		*		

(1) SMR CODE	(2) FEDERAL STOCK NUMBER	(3) DESCRIPTION REFERENCE NUMBER & MFR CODE		USABLE ON CODE	(4) UNIT OF MEAS	(5) QTY INC IN UNIT	(6) 30-DAY DS/GS MAINT ALW (a) 1-20	(b) 21-50	(c) 51-100	(7) 1-YR ALWPER 100 EQUIP CNTGCY	(8) DEPOT MAINT ALWPER 100 EQUIP	(9) ILLUSTRATION (a) FIG NO	(b) ITEM NO
		FUNCTIONAL GROUP - 60	BULK MATERIALS	CH-47									
			CONTINUED									BULK	
			OIL RESISTANT,0.438 IN.ID, 0.641 IN.OD,1000 PSI OPERATING PRESSURE,5000 PSI BURST PRESSURE,MINUS 65 TO PLUS 375 DEG F TEMP RANGE COMP										
C PA-FZ-Z	4720-580-6944	MS87027-20	96906 HOSE,NONMETALLIC-SYNTHETIC... RUBBER INNER SURFACE, BRAIDED CRES WIRE OUTER COVERING,SMOOTH BORE,FUEL & OIL RESISTANT,1.125 IN.ID, 1.437 IN.OD,45 FT LG,800 PSI WORKING PRESSURE,2000 PSI BURST PRESSURE,MINUS 40 TO PLUS 300 DEG F TEMP RANGE COMP	ABC	IN		*	*	*		*		
C PC-FZ-Z	4720-595-1088		81349 HOSE,NONMETALLIC.....	ABC	IN		*	*	*		*		
PC-FZ-Z	4720-595-1089		81349 HOSE,RUBBER-SYNTHETIC RUBBER. INNER SURFACE,RUBBER IMPREGNATED 1 BRAID COTTON OUTER COVERING,SMOOTH BORE, 5/8 IN.ID,1500 PSI WORKING PRESSURE,6000 PSI BURST PRESSURE,MINUS 65 TO PLUS 250 DEG F TEMP RANGE, MIL-H-8794,SIZE 12 COMP	ABC	IN		*	*	*		*		
PA-FZ-Z	4720-611-2548	MS87027-6	96906 HOSE,NONMETALLIC-SYNTHETIC... RUBBER INNER SURFACE, BRAIDED CRES WIRE OUTER COVERING,SMOOTH BORE,FUEL & OIL RESISTANT,0.344 IN.ID, 0.547 IN.OD,8 FT LG,1500 PSI WORKING PRESSURE,6000 PSI BURST PRESSURE,MINUS 40 DEG TO PLUS 300 DEG F TEMP RANGE COMP	ABC	IN		*	*	*		*		
PC-OZ-Z	4720-684-0260		81349 HOSE,NONMETALLIC-SYNTHETIC... RUBBER INNER SURFACE,MOLDED SYNTHETIC RUBBER OUTER COVERING,SMOOTH BORE,1/4 IN.ID,1000 PSI BURST PRESSURE,FOR FUEL, OIL,COOLANT,WATER & ALCOHOL SYSTEMS,MIL-H-6000 COMP	ABC	IN		*	*	*		*		
PA-DZ-Z	4720-803-7157	676-4	00624 HOSE,NONMETALLIC COMP	ABC	EA						*		
PB-OZ-Z	4720-809-2889	X322	61463 HOSE,RUBBER-SYNTHETIC RUBBER. INNER SURFACE,MOLDED SYNTHETIC RUBBER OUTER COVERING,SMOOTH BORE,3/4	ABC	IN		*	*	*		*		

(1) SMR CODE	(2) FEDERAL STOCK NUMBER	(3) DESCRIPTION REFERENCE NUMBER & MFR CODE	USABLE ON CODE CH-47	(4) UNIT OF MEAS	(5) QTY INC IN UNIT	(6) 30-DAY DS/GS MAINT ALW (a) 1-20	(b) 21-50	(c) 51-100	(7) 1-YR ALWPER 100 EQUIP CNTGCY	(8) DEPOT MAINT ALWPER 100 EQUIP	(9) ILLUSTRATION (a) FIG NO	(b) ITEM NO
		FUNCTIONAL GROUP - 60 BULK MATERIALS										
		CONTINUED									BULK	
		IN.ID,1.062 IN.OD,1000 PSI BURST PRESSURE,MIL-H-6000										
PB-FZ-Z	4720-815-6354	81349 HOSE,NONMETALLIC..... TETRAFLUOROETHYLENE INNER CONVEYING SURFACE,CRES BRAIDED WIRE OUTER COVERING,PASSIVATED FINISH, 0.406 IN.ID,0.563 IN.OD, 6 FT LG,1500 PSI RATED WP, 3000 PSI HYDROSTATIC TEST PRESSURE,8000 PSI BURST PRESSURE,MINUS 65 DEG F TO PLUS 450 DEG F DESIGNED TEMP RANGE,MIL-H-27267,SIZE 8 COMP	ABC	EA		*	*	*		*		
PA-FZ-Z	4720-857-1729	81349 HOSE,NONMETALLIC..... TETRAFLUOROETHYLENE INNER CONVEYING SURFACE,CRES BRAIDED WIRE OUTER COVERING,PASSIVATED FINISH, 0.875 IN.ID,1.109 IN.OD, 1250 PSI RATED WP,2500 PSI HYDROSTATIC TEST PRESSURE, 3500 PSI BURST PRESSURE HIGH TEMP,5000 PSI BURST PRESSURE ROOM TEMP,MINUS 67 DEG F TO 450 DEG F DESIGNED TEMP RANGE,DESIGEND FOR HYDRAULIC FLUIDS, MIL-H-27267,SIZE 16Z COMP	ABC	EA		*	*	*		*		
PB-FZ-Z	4720-857-1730	81349 HOSE,NONMETALLIC..... TETRAFLUOROETHYLENE INNER CONVEYING SURFACE,CRES BRAIDED WIRE OUTER COVERING,PASSIVATED FINISH, 1/2 IN.ID,21/32 IN.OD,1500 PSI RATED WP,3000 PSI HYDROSTATIC TEST PRESSURE, 5500 PSI BURST PRESSURE HIGH TEMP,7000 PSI BURST PRESSURE ROOM TEMP,MINUS 67 DEG F TO 450 DEG F DESIGNED TEMP RANGE,DESIGNED FOR HYDRAULIC FLUIDS, MIL-H-27267-10 COMP	ABC	IN		*	*	*		*		
PA-FZ-Z	4720-857-1731	81349 HOSE,NONMETALLIC..... TETRAFLUOROETHYLENE INNER CONVEYING SURFACE,CRES BRAIDED WIRE OUTER	ABC	EA		*	*	*		*		

(1) SMR CODE	(2) FEDERAL STOCK NUMBER	(3) DESCRIPTION REFERENCE NUMBER & MFR CODE	USABLE ON CODE	(4) UNIT OF MEAS	(5) QTY INC IN UNIT	(6) 30-DAY DS/GS MAINT ALW (a) 1-20	(b) 21-50	(c) 51-100	(7) 1-YR ALWPER 100 EQUIP CNTGCY	(8) DEPOT MAINT ALWPER 100 EQUIP	(9) ILLUSTRATION (a) FIG NO	(b) ITEM NO
		FUNCTIONAL GROUP - 60 BULK MATERIALS	CH-47									
		CONTINUED COVERING,PASSIVATED FINISH, 0.313 IN.ID,0.446 IN.OD, 1500 PSI RATED WP,3000 PSI HYDROSTATIC TEST PRESSURE, 6500 PSI BURST PRESSURE HIGH TEMP,9000 PSI BURST PRESSURE ROOM TEMP,MINUS 67 DEG F TO 450 DEG F DESIGNED TEMP RANGE,DESIGNED FOR HYDRAULIC FLUIDS, MIL-H-27267,SIZE 6 COMP									BULK	
PA-FZ-Z	4720-857-1732	81349 HOSE,NONMETALLIC.....	ABC	EA		*	*	*		*		
		TETRAFLUOROETHYLENE INNER CONVEYING SURFACE,CRES BRAIDED WIRE OUTER COVERING,PASSIVATED FINISH, 0.188 IN.ID,0.312 IN.OD, 1500 PSI RATED WP,3000 PSI HYDROSTATIC TEST PRESSURE, 7000 PSI BURST PRESSURE HIGH TEMP,12000 PSI BURST PRESSURE ROOM TEMP,MINUS 67 DEG F TO 450 DEG F DESIGNED TEMP RANGE,DESIGNED FOR HYDRAULIC FLUIDS, MIL-H-27267,SIZE 4 COMP										
PA-OZ-Z	4720-857-1733	81349 HOSE,NONMETALLIC.....	ABC	IN		*	*	*		*		
		TETRAFLUOROETHYLENE INNER CONVEYING SURFACE,CRES BRAIDED WIRE OUTER COVERING,PASSIVATED FINISH, 1-1/8 IN.ID,1-23/64 IN.OD, 1000 PSI RATED WP,2000 PSI HYDROSTATIC TEST PRESSURE, 3000 PSI BURST PRESSURE HIGH TEMP,4000 PSI BURST PRESSURE ROOM TEMP,MINUS 67 DEG F TO 450 DEG F DESIGNED TEMP RANGE,DESIGNED FOR HYDRAULIC FLUIDS, MIL-H-27267-2,SIZE 20Z										
PB-OZ-Z	4720-857-1734	81349 HOSE,NONMETALLIC.....	ABC	EA		*	*	*		*		
		TETRAFLUOROETHYLENE INNER CONVEYING SURFACE,CRES BRAIDED WIRE OUTER COVERING,PASSIVATED FINISH, 0.625 IN.ID,0.789 IN.OD, 1000 PSI RATED WP,2000 PSI HYDROSTATIC TEST PRESSURE										

(1) SMR CODE	(2) FEDERAL STOCK NUMBER	(3) DESCRIPTION REFERENCE NUMBER & MFR CODE		USABLE ON CODE CH-47	(4) UNIT OF MEAS	(5) QTY INC IN UNIT	(6) 30-DAY DS/GS MAINT ALW (a) 1-20	(b) 21-50	(c) 51-100	(7) 1-YR ALWPER 100 EQUIP CNTGCY	(8) DEPOT MAINT ALWPER 100 EQUIP	(9) ILLUSTRATION (a) FIG NO	(b) ITEM NO
		FUNCTIONAL GROUP - 60 BULK MATERIALS										BULK	
			CONTINUED 3500 PSI BURST PRESSURE HIGH,TEMP 5500 PSI BURST PRESSURE ROOM TEMP,MINUS 67 DEG F TO 450 DEG F DESIGNED TEMP RANGE,DESIGNED FOR HYDRAULIC FLUIDS, MIL-H-27267,SIZE 12 COMP										
PB-FZ-Z	4720-857-1735		81349 HOSE,NONMETALLIC..... TETRAFLUOROETHYLENE INNER CONVEYING SURFACE,CRES BRAIDED WIRE OUTER COVERING,PASSIVATED FINISH, 1/8 IN.ID,1/4 IN.OD,1500 PSI RATED WP,3000 PSI HYDROSTATIC TEST PRESSURE, 7500 PSI BURST PRESSURE HIGH TEMP,12000 PSI BURST PRESSURE ROOM TEMP,MINUS 67 DEG F TO 450 DEG F DESIGNED TEMP RANGE,DESIGNED FOR HYDRAULIC FLUIDS, MIL-H-27267-3	ABC	IN		*	*	*		*		
PA-FZ-Z	4720-857-1736		81349 HOSE,NONMETALLIC..... TETRAFLUOROETHYLENE INNER CONVEYING SURFACE,CRES BRAIDED WIRE OUTER COVERING,PASSIVATED FINISH, 1/4 IN.ID,3/8 IN.OD,1500 PSI RATED WP,3000 PSI HYDROSTATIC TEST PRESSURE, 6500 PSI BURST PRESSURE HIGH TEMP,10000 PSI BURST PRESSURE ROOM TEMP,MINUS 67 DEG F TO 450 DEG F DESIGNED TEMP RANGE,DESIGNED FOR HYDRAULIC FLUIDS, MIL-H-27267,SIZE 5	ABC	IN		*	*	*		*		
PB-FZ-Z	4720-860-5543	MS27363E0220	96906 HOSE ASSEMBLY..... TETRAFLUOROETHYLENE	ABC	EA		*	*	*		*		
PA-OZ-Z	4720-886-1418	EA8665	81996 TUBING,RUBBER-NATURAL,BLACK,. 1/2 IN.ID,1/8 IN.WALL THK, 30 FT TO 50 FT LG,FED ZZ-T-831,TYPE 2,GRADE L	ABC	FT		*	*	*		*		
PA-FZ-Z	4720-975-2885	676-6	00624 HOSE,NONMETALLIC COMP	ABC	IN		*	*	*		*		
PA-FZ-Z	4730-013-6969	MS27060-6C	96906 ELBOW,TUBE TO HOSE-CRES,..... FLARED,W/SWIVEL NUT,90 DEG FORGED ELBOW,FOR U/W MIL-H-27267-6 HOSE COMP	ABC	EA		*	*	*		*		
PA-OZ-Z	4730-013-6970	MS27060-4C	96906 ELBOW,TUBE TO HOSE-CRES,.....	ABC	EA		*	*	*		*		

(1) SMR CODE	(2) FEDERAL STOCK NUMBER	(3) DESCRIPTION REFERENCE NUMBER & MFR CODE		USABLE ON CODE	(4) UNIT OF MEAS	(5) QTY INC IN UNIT	(6) 30-DAY DS/GS MAINT ALW (a) 1-20	(b) 21-50	(c) 51-100	(7) 1-YR ALWPER 100 EQUIP CNTGCY	(8) DEPOT MAINT ALWPER 100 EQUIP	(9) ILLUSTRATION (a) FIG NO	(b) ITEM NO
		FUNCTIONAL GROUP - 60	BULK MATERIALS	CH-47									
			CONTINUED										
			FLARED,W/SWIVEL NUT,90 DEG FORGED ELBOW,FOR U/W MIL-H-27267-4 HOSE COMP									BULK	
R PA-FZ-Z	4730-135-8851	MS27057-16	96906 ELBOW,TUBE TO HOSE-CRES WIRE, SOCKET & SLEEVE,ALUMINUM ALLOY UNION,NUT,SHOULDER, ELBOW & NIPPLE,W/SWIVEL NUT,FLARED,90 DEG ELBOW,FOR U/W MIL-H-27267-16 HOSE COMP	ABC	EA		*	*	*		*		
PA-FZ-Z	4730-015-1418	900591A14C	00624 CLAMP,HOSE.....	ABC	EA		*	*	*		*		
PA-FZ-Z	4730-017-8234	MS27053-16C	96906 ADAPTER,STRAIGH,TUBE..... TO HOSE-CRES,FLARED, W/SWIVEL NUT,FOR U/W MIL-H-27267-16 HOSE COMP	ABC	EA		*	*	*		*		
PB-FZ-Z	4730-017-8661	MS27061-16	96906 ADAPTER,STRAIGHT,TUBE TO..... HOSE-ALUMINUM ALLOY,CRES WIRE,FLARED,W/SWIVEL NUT, FOR U/W MIL-H-27267-16 HOSE	ABC	EA		*	*	*		*		
PA-FZ-Z	4730-017-8846	MS27063-12	96906 ELBOW,TUBE TO HOSE-ALUMINUM.. ALLOY,CRES WIRE,45 DEG ELBOW,FLARED,W/SWIVEL NUT, FOR U/W MIL-H-27267-12 HOSE	ABC	EA		*	*	*		*		
PB-FZ-Z	4730-017-8886	MS27065-10	96906 ELBOW,TUBE TO HOSE-ALUMINUM.. ALLOY,CRES WIRE,FLARED,90 DEG ELBOW,W/SWIVEL NUT,FOR U/W MIL-H-27267-10 HOSE	ABC	EA		*	*	*		*		
PA-FZ-Z	4730-017-8887	MS27065-12	96906 ELBOW,TUBE TO HOSE-ALUMINUM.. ALLOY,CRES WIRE,FLARED,90 DEG ELBOW,W/SWIVEL NUT,FOR U/W MIL-H-27267-12 HOSE	ABC	EA		*	*	*		*		
PA-OZ-Z	4730-050-4205	MS15001-3	96906 FITTING,LUBRICATION-STEEL,... HYDRAULIC TYPE,1/4 IN.-28 NF,7/8 IN.H	ABC	EA		*	*	*		*		
PA-FZ-Z	4730-051-3612	MS21914-8D	96906 CAP,TUBE-ALUMINUM ALLOY..... 3/4 IN.-16 NF,FOR 1/2 IN.OD TUBING	ABC	EA		*	*	*		*		
PB-FZ-Z	4730-052-7691	MS27062-8C	96906 ADAPTER,SWIVEL FLANGE,HOSE... CRES,SQUARE FLANGE,FOR U/W MIL-H-27267-8 HOSE	ABC	EA		*	*	*		*		
PB-FZ-Z	4730-052-7694	MS27062-12C	96906 ADAPTER,SWIVEL FLANGE,HOSE... CRES,SQUARE FLANGE,FOR U/W MIL-H-27267-12 HOSE	ABC	EA		*	*	*		*		
PA-FZ-Z	4730-052-9517	MS27063-10C	96906 ELBOW,TUBE TO HOSE-CRES,..... FLARED,45 DEG ELBOW, W/SWIVEL NUT,FOR U/W MIL-H-27267-10 HOSE	ABC	EA		*	*	*		*		
PB-FZ-Z	4730-052-9518	MS27065-20C	96906 ELBOW,TUBE TO HOSE-CRES,..... FLARED,90 DEG ELBOW,	ABC	EA		*	*	*		*		

(1) SMR CODE	(2) FEDERAL STOCK NUMBER	(3) DESCRIPTION REFERENCE NUMBER & MFR CODE		USABLE ON CODE CH-47	(4) UNIT OF MEAS	(5) QTY INC IN UNIT	(6) 30-DAY DS/GS MAINT ALW (a) 1-20	(b) 21-50	(c) 51-100	(7) 1-YR ALWPER 100 EQUIP CNTGCY	(8) DEPOT MAINT ALWPER 100 EQUIP	(9) ILLUSTRATION (a) FIG NO	(b) ITEM NO
		FUNCTIONAL GROUP - 60 BULK MATERIALS											
		CONTINUED W/SWIVEL NUT,FOR U/W MIL-H-27267-20 HOSE										BULK	
PB-FZ-Z	4730-052-9520	MS27065-10C	96906	ELBOW,TUBE TO HOSE-CRES..... FLARED,90 DEG ELBOW, W/SWIVEL NUT,FOR U/W MIL-H-27267-10 HOSE	ABC	EA	*	*	*		*		
PA-FZ-Z	4730-053-0379	MS27381-6C	96906	ADAPTER,STRAIGHT,TUBE TO HOSE CRES,W/SWIVEL NUT,FOR U/W MIL-H-27267-6 HOSE COMP	ABC	EA	*	*	*		*		
N PA-QZ-Z	5340-655-7853		80205	PIN,QUICK RELEASE-STEEL..... CADMIUM PLATED,2 CRES LOCKING ELEMENTS,PASSIVATED FINISH,W/ATTACHING PULL RING,3/4 IN.HEAD DIA,1/4 IN.BODY DIA,1/2 IN.GRIP LG	ABC	EA	*	*	*		*		
PA-FZ-Z	4730-053-0380	MS27385-6C	96906	ELBOW,TUBE TO HOSE-CRES..... W/SWIVEL NUT,90 DEG FORGED ELBOW,FOR U/W MIL-H-27267-6 HOSE COMP	ABC	EA	*	*	*		*		
PA-FZ-Z	4730-053-0389	MS27381-8	96906	ADAPTER,STRAIGHT,TUBE TO..... HOSE-CRES SOCKET,SLEEVE & WIRE,ALUMINUM ALLOY NIPPLE & NUT,W/SWIVEL NUT,FOR U/W MIL-H-27267-8 HOSE COMP	ABC	EA	*	*	*		*		
PA-FZ-Z	4730-053-0391	MS27382-10	96906	ELBOW,TUBE TO HOSE-CRES..... SOCKET,SLEEVE & WIRE, ALUMINUM ALLOY UNION,NUT, SHOULDER,ELBOW & NIPPLE,45 DEG ELBOW,W/SWIVEL NUT,FOR U/W MIL-H-27267-10 HOSE COMP	ABC	EA	*	*	*		*		
PA-FZ-Z	4730-053-0395	MS27382-16	96906	ELBOW,TUBE TO HOSE-CRES..... SOCKET,SLEEVE & WIRE, ALUMINUM ALLOY UNION,NUT, SHOULDER,ELBOW & NIPPLE,45 DEG ELBOW,W/SWIVEL NUT,FOR U/W MIL-H-27267-16 HOSE COMP	ABC	EA	*	*	*		*		
PA-FZ-Z	4730-053-0411	MS27382-12	96906	ELBOW,TUBE TO HOSE-CRES..... SOCKET,SLEEVE & WIRE, ALUMINUM ALLOY UNION,NUT, SHOULDER,ELBOW & NIPPLE,45 DEG ELBOW,W/SWIVEL NUT,FOR U/W MIL-H-27267-12 HOSE	ABC	EA	*	*	*		*		
PA-FZ-Z	4730-053-0415	MS27383-10	96906	ELBOW,TUBE TO HOSE-CRES..... SOCKET,SLEEVE & WIRE, ALUMINUM ALLOY UNION,NUT, SHOULDER,ELBOW & NIPPLE,90 DEG ELBOW,W/SWIVEL NUT,FOR	ABC	EA	*	*	*		*		

(1) SMR CODE	(2) FEDERAL STOCK NUMBER	(3) DESCRIPTION REFERENCE NUMBER & MFR CODE		USABLE ON CODE	(4) UNIT OF MEAS	(5) QTY INC IN UNIT	(6) 30-DAY DS GS MAINT ALW a 1-20	b 21-50	c 51-100	(7) 1 YR ALWPER 100 EQUIP CNTGCY	(8) DEPOT MAINT ALWPER 1 EQUIP	(9) ILLUSTRATION (a) FIG NO	(b) ITEM NO
		FUNCTIONAL GROUP - 60 BULK MATERIALS		CH-47									
		CONTINUED											
		U/W MIL-H-27267-10 HOSE COMP										BULK	
PA-FZ-Z	4730-053-0416	MS27381-16	96906 ADAPTER,STRAIGHT,TUBE TO HOSE ALUMINUM ALLOY NUT & NIPPLE,CRES SOCKET,SLEEVE & WIRE,W/SWIVEL NUT,FOR U/W MIL-H-27267-16 HOSE COMP	ABC	EA		*	*	*		*		
PA-FZ-Z	4730-053-0418	MS27381-10	96906 ADAPTER,STRAIGHT,TUBE TO HOSE ALUMINUM ALLOY NUT & NIPPLE,CRES SOCKET,SLEEVE & WIRE,W/SWIVEL NUT,FOR U/W MIL-H-27267-10 HOSE COMP	ABC	EA		*	*	*		*		
PA-FZ-Z	4730-054-7633	MS27383-12	96906 ELBOW,TUBE TO HOSE-CRES..... SOCKET,SLEEVE & WIRE, ALUMINUM ALLOY UNION,NUT, SHOULDER,ELBOW & NIPPLE,90 DEG ELBOW,W/SWIVEL NUT,FOR U/W MIL-H-27267-12 HOSE COMP	ABC	EA		*	*	*		*		
PA-FZ-Z	4730-054-7635	MS27384-8	96906 ELBOW,TUBE TO HOSE-CRES..... SOCKET,SLEEVE,UNION & WIRE, ALUMINUM ALLOY NUT & ELBOW, 45 DEG FORGED ELBOW, W/SWIVEL NUT,FOR U/W MIL-H-27267-8 HOSE COMP	ABC	EA		*	*	*		*		
PA-FZ-Z	4730-054-7650	MS27381-4C	96906 ADAPTER,STRAIGHT,TUBE TO HOSE CRES,W/SWIVEL NUT,FOR U/W MIL-H-27267-4 HOSE COMP	ABC	EA		*	*	*		*		
PA-FZ-Z	4730-054-7661	MS27381-12	96906 ADAPTER,STRAIGHT,TUBE TO..... HOSE-ALUMINUM ALLOY NUT & NIPPLE,CRES SOCKET,SLEEVE & WIRE,W/SWIVEL NUT,FOR U/W MIL-H-27267-12 HOSE COMP	ABC	EA		*	*	*		*		
PA-FZ-Z	4730-057-0663	MS27385-8	96906 ELBOW,TUBE TO HOSE-CRES..... UNION,WIRE,SOCKET & SLEEVE, ALUMINUM ALLOY NUT & ELBOW, W/SWIVEL NUT,90 DEG FORGED ELBOW,FOR U/W MIL-H-27267-8 HOSE COMP	ABC	EA		*	*	*		*		
PA-FZ-Z	4730-057-0664	MS27385-4C	96906 ELBOW,TUBE TO HOSE-CRES..... W/SWIVEL NUT,90 DEG FORGED ELBOW,FOR U/W MIL-H-27267-4 HOSE COMP	ABC	EA		*	*	*		*		
PA-FZ-Z	4730-057-0665	MS27384-4C	96906 ELBOW,TUBE TO HOSE-CRES,45... DEG FORGED ELBOW,W/SWIVEL NUT,FOR U/W MIL-H-27267-4 HOSE COMP	ABC	EA		*	*	*		*		
PB-FZ-Z	4730-057-4554	MS24397D31	96906 REDUCER,MACHINE THREAD..... ALUMINUM ALLOY,DRILLED HEX	ABC	EA		*	*	*		*		

(1) SMR CODE	(2) FEDERAL STOCK NUMBER	(3) DESCRIPTION — REFERENCE NUMBER & MFR CODE		USABLE ON CODE	(4) UNIT OF MEAS	(5) QTY INC IN UNIT	(6) 30-DAY DS/GS MAINT ALW (a) 1-20	(b) 21-50	(c) 51-100	(7) 1-YR ALWPER 100 EQUIP CNTGCY	(8) DEPOT MAINT ALWPER 100 EQUIP	(9) ILLUSTRATION (a) FIG NO	(b) ITEM NO
		FUNCTIONAL GROUP - 60 BULK MATERIALS		CH-47									
			CONTINUED									BULK	
			WRENCHING,ONE END,7/16 IN.-20 NF,INTERNAL,FOR 1/4 IN.OD TUBE,OTHER END,7/8 IN.-14 NF,EXTERNAL,FOR 5/8 IN.OD TUBE,27/32 IN.LG										
PA-FZ-Z	4730-057-6427	MS27383-16	96906	ELBOW,TUBE TO HOSE-CRES..... SOCKET,SLEEVE & WIRE, ALUMINUM ALLOY UNION,NUT, SHOULDER,ELBOW & NIPPLE,90 DEG ELBOW,W/SWIVEL NUT,FOR U/W MIL-H-27267-16 HOSE COMP	ABC	EA		*	*	*		*		
PA-FZ-Z	4730-060-2852	MS24398D4-2	96906	ADAPTER,STRAIGHT,TUBE TO..... BOSS-ALUMINUM ALLOY, 3/8 IN.-24 NF,INTERNAL, 5/6 IN.-24 NF EXTERNAL,FOR 3/16 IN.& 1/8 IN.TUBES	ABC	EA		*	*	*		*		
PA-OZ-Z	4730-062-6821	MS24393D8	96906	NIPPLE,TUBE-ALUMINUM ALLOY... 3/4 IN.-16 NF,FOR 1/2 IN. OD TUBE	ABC	EA		*	*	*		*		
PA-FZ-Z	4730-062-7437	MS21920-59R	96906	CLAMP,HOSE-CRES BAND,..... PASSIVATED FINISH,STEEL ALLOY NUT & BOLT,CADMIUM PLATED,QUICK RELEASE LATCH, 7 IN.TO 7.380 IN.ID,0.625 IN.W,0.028 IN.THK	ABC	EA		*	*	*		*		
PA-FZ-Z	4730-087-1008	MS87023-12	96906	ELBOW,TUBE TO HOSE-ALUMINUM.. 90 DEG,ELBOW,W/SWIVEL NUT, FOR U/W MS87027-12 HOSE COMP	ABC	EA		*	*	*		*		
PA-FZ-Z	4730-087-1010	MS87022-12	96906	ADAPTER,TUBE TO HOSE-ALUMINUM 45 DEG ELBOW,W/SWIVEL NUT, FOR U/W MS87027-12 HOSE COMP	ABC	EA		*	*	*		*		
PA-FZ-Z	4730-087-1015	MS87022-20	96906	ADAPTER,FLARELESS COMP	ABC	EA		*	*	*		*		
PA-FZ-Z	4730-087-1016	MS87022-16	96906	ELBOW,TUBE TO HOSE-ALUMINUM,. 45 DEG ELBOW,W/SWIVEL NUT, FOR U/W MS87027-16 HOSE COMP	ABC	EA		*	*	*		*		
PB-FZ-Z	4730-089-6303	MS27065-12C	96906	ELBOW,TUBE TO HOSE-CRES,..... FLARED,90 DEG ELBOW, W/SWIVEL NUT,FOR U/W MIL-H-27267-12 HOSE	ABC	EA		*	*	*		*		
PA-FZ-Z	4730-105-6025	MS21921-20D	96906	NUT,TUBE COUPLING-ALUMINUM... ALLOY,ANODIZED,1-5/8 IN.-12N,1.050 IN.LG,FOR 1-1/4 IN.OD TUBE	ABC	EA		*	*	*		*		
PA-FZ-Z	4730-106-4416	AE14024H	00624	FITTING,FLARELESS-450 DEG.... ADJUSTABLE,FOR USE	ABC	EA		*	*	*		*		

(1) SMR CODE	(2) FEDERAL STOCK NUMBER	(3) REFERENCE NUMBER & MFR CODE	DESCRIPTION	USABLE ON CODE	(4) UNIT OF MEAS	(5) QTY INC IN UNIT	(6) 30-DAY DS GS MAINT ALW (a) 1-20	(b) 21-50	(c) 51-100	(7) 1YR ALWPER 100 EQUIP CONTGCY	(8) DEPOT MAINT ALWPER 100 EQUIP	(9) ILLUSTRATION (a) FIG NO	(b) ITEM NO
		FUNCTIONAL GROUP - 60	BULK MATERIALS	CH-47									
			CONTINUED										
R PA-FZ-Z	4730-106-4416	AE14020H	W/-8 HOSE COMP 00624 FITTING,STRAIGHT FLARELESS... COMP	ABC	EA		*	*	*		*	BULK	
PA-FZ-Z	4730-114-0933	76144-4	00624 ELBOW,TUBE TO HOSE COMP	ABC	EA		*	*	*		*		
PA-FZ-Z	4730-114-0934	AE14026H	00624 FITTING ASSEMBLY COMP	ABC	EA		*	*	*		*		
PA-FZ-Z	4730-128-9819	MS27384-6C	96906 ELBOW,TUBE TO HOSE-CRES,45... DEG FORGED ELBOW,W/SWIVEL NUT,FOR U/W MIL-H-27267-6 HOSE COMP	ABC	EA		*	*	*		*		
PA-FZ-Z	4730-142-1571	NAS397-12	80205 CLAMP,HOSE-STEEL,0.688 IN.... TO 0.750 IN.OD HOSE	ABC	EA		*	*	*		*		
PB-FZ-Z	4730-142-2167	AN818-6D	88044 NUT,TUBE COUPLING-ALUMINUM... ALLOY,ANODIZED,9/16 IN.-18 NF,23/32 IN.LG,FOR 3/8 IN. OD TUBE	ABC	EA		*	*	*		*		
PA-FZ-Z	4730-168-1782	76144-6	00624 ELBOW ASSEMBLY,HOSE-COMP.....	ABC	EA		*	*	*		*		
PA-HZ-Z	4730-188-3493	AN932D2	88044 PLUG,PIPE-ALUMINUM ALLOY,HEX. RECESSED DRIVE,1/8 IN.-27 NPT,0.270 IN.LG	ABC	EA		*	*	*		*		
PA-OZ-Z	4730-194-1055	AN839-12D	88044 ELBOW,TUBE TO HOSE-ALUMINUM.. ALLOY,45 DEG,1-1/16-12N,FOR 3/4 IN.OD TUBE & 3/4 IN.ID HOSE	ABC	EA		*	*	*		*		
PA-OZ-Z	4730-202-9169	MS21913D5	96906 PLUG,MACHINE THREAD-ALUMINUM. ALLOY,HEX HEAD,1/2 IN.-20 NF,43/64 IN.LG,FOR 5/16 IN.OD TUBE	ABC	EA		*	*	*		*		
PA-OZ-Z	4730-203-0246	MS21913D12	96906 PLUG,MACHINE THREAD-ALUMINUM. ALLOY,HEX HEAD,1-1/16 IN.-12N,1-1/32 IN.LG,FOR 3/4 IN.OD TUBE	ABC	EA		*	*	*		*		
PA-FZ-Z	4730-203-2661	AN818-6C	88044 NUT,TUBE COUPLING-CRES,9/16.. IN.-18 NF,FOR 3/8 IN.OD TUBE	ABC	EA		*	*	*		*		
PA-OZ-Z	4730-203-2662	AN818-8C	88044 NUT,TUBE COUPLING-STEEL,3/4.. IN.-16 NF,0.570 IN.ID,27/32 IN.LG,FOR 1/2 IN.OD TUBE	ABC	EA		*	*	*		*		
PA-OZ-Z	4730-203-2982	MS21943-4L	96906 CONNECTOR,MULTIPLE,FLUID..... PRESSURE LINE-ALUMINUM ALLOY,ANODIZED,1.730 IN. LG,7/16 IN.-20 NF,U/W 1/4 IN.OD TUBE	ABC	EA		*	*	*		*		
PA-OZ-Z	4730-203-4782	MS21910-8	96906 TEE,TUBE TO BOSS-STEEL..... 3/4 IN.-16 NF,EXTERNAL,2 ENDS,FOR 1/2 IN.OD TUBE	ABC	EA		*	*	*		*		
PA-FZ-Z	4730-203-7304	MS27224-16	96906 ELBOW,TUBE TO HOSE-ALUMINUM.. ALLOY,ANODIZED,90 DEG ELBOW,W/SWIVEL NUT,FOR U/W MIL-H-8794-16 HOSE COMP	ABC	EA		*	*	*		*		
PA-OZ-Z	4730-203-9749	MS21938-6H	96906 BOLT,FLUID PASSAGE-ALUMINUM..	ABC	EA		*	*	*		*		

(1) SMR CODE	(2) FEDERAL STOCK NUMBER	(3) DESCRIPTION REFERENCE NUMBER & MFR CODE		USABLE ON CODE CH-47	(4) UNIT OF MEAS	(5) QTY INC IN UNIT	(6) 30-DAY DS/GS MAINT ALW (a) 1-20	(b) 21-50	(c) 51-100	(7) 1-YR ALWPER 100 EQUIP CNTGCY	(8) DEPOT MAINT ALWPER 100 EQUIP	(9) ILLUSTRATION (a) FIG NO	(b) ITEM NO
		FUNCTIONAL GROUP - 60 BULK MATERIALS											
		CONTINUED ALLOY,ANODIZED,2.594 IN. LG,9/16 IN.-18 NF,BOTH ENDS U/W 0.375 IN.OD TUBE										BULK	
PA-OZ-Z	4730-221-2134	AN932D1	88044	ABC	EA		*	*	*		*		
		PLUG,PIPE-ALUMINUM ALLOY,HEX. RECESSED DRIVE,1/16 IN.-27 NPT,0.270 IN.LG											
PA-FZ-Z	4730-222-1915	AN818-16D	88044	ABC	EA		*	*	*		*		
		NUT,TUBE COUPLING-ALUMINUM... ALLOY,1-5/16 IN.-12N, 1-1/8 IN.LG,FOR 1 IN.OD TUBE COMP											
PA-OZ-Z	4730-274-7120	MS21914-16	96906	ABC	EA		*	*	*		*		
		CAP,TUBE-STEEL,1-5/16..... IN.-12N,FOR 3/4 IN.OD TUBE											
PA-OZ-Z	4730-277-2461	AN939D12	88044	ABC	EA		*	*	*		*		
		ELBOW,BOSS-ALUMINUM ALLOY,... ANODIZED,1-1/16 IN.-12N, 1-23/64 IN.LG											
PA-OZ-Z	4730-277-2462	AN939D16	88044	ABC	EA		*	*	*		*		
		ELBOW,BOSS-ALUMINUM ALLOY.... 1-5/16 IN.-12N,FOR 1 IN. OD TUBE											
PA-OZ-Z	4730-277-4749	AN894-5-4	88044	ABC	EA		*	*	*		*		
		ADAPTER,STRAIGHT,TUBE TO..... BOSS-STEEL,CADMIUM PLATED, 1/2 IN.-20 NF,INTERNAL, FOR 5/16 IN.OD TUBING,OTHER END,7/16 IN.-20 NF, EXTERNAL,FOR 1/4 IN.OD TUBING,1-1/2 IN.LG											
PA-OZ-Z	4730-277-5096	AN6289-16	88044	ABC	EA		*	*	*		*		
		LOCKNUT,TUBE FITTING..... ALUMINUM ALLOY,1-5/16 IN.-12N,FOR 1 IN.OD TUBE											
PB-FZ-Z	4730-277-5098	MS20819-2D	96906	ABC	EA		*	*	*		*		
		SLEEVE,FLARED TUBE FITTING... ALUMINUM ALLOY,0.344 IN.LG, FOR 1/8 IN.OD TUBE											
PB-FZ-Z	4730-277-5157	AN938D4	88044	ABC	EA		*	*	*		*		
		TEE,BOSS-STEEL,7/16..... IN.-20 NF,1/4 IN.OD TUBE											
N PA-OZ-Z	4730-277-5373	MS20819-8D	96906	ABC	EA		*	*	*		*		
		SLEEVE,FLARED,TUBE FITTING... ALUMINUM ALLOY,9/16 IN.O/A, FOR 1/2 IN.OD TUBE											
PA-OZ-Z	4730-277-6437	AN832-10D	88044	ABC	EA		*	*	*		*		
		NIPPLE,TUBE-ALUMINUM ALLOY,.. 7/8 IN.-14 NF,FOR 5/8 IN.OD TUBE,2-23/32 IN.LG											
PB-HZ-Z	4730-278-0678	MS20819-4	96906	ABC	EA		*	*	*		*		
		SLEEVE,FLARED,TUBE FITTING... STEEL,CADMIUM PLATED,0.255 IN.ID,0.297 IN.OD,0.406 IN. LG,FOR 1/4 IN.OD TUBE COMP											
PA-OZ-Z	4730-278-2782	AN938-6	88044	ABC	EA		*	*	*		*		
		TEE,BOSS-STEEL,9/16 IN.-18... NF,1 END,FOR 3/8 IN.OD TUBE											
C PA-FZ-Z	4730-278-3122	MS24396D10	96906	ABC	EA		*	*	*		*		
		ELBOW,TUBE-ALUMINUM ALLOY,45. DEG ELBOW,7/8 IN.-14 NF, EXTERNAL,BOTH ENDS,FOR 5/8 IN.OD TUBE											
PB-FZ-Z	4730-278-6070	MS20819-6D	96906	ABC	EA		*	*	*		*		
		SLEEVE,FLARED,TUBE FITTING...											

(1) SMR CODE	(2) FEDERAL STOCK NUMBER	(3) DESCRIPTION REFERENCE NUMBER & MFR CODE		USABLE ON CODE	(4) UNIT OF MEAS	(5) QTY INC IN UNIT	(6) 30-DAY DS/GS MAINT ALW (a) 1-20	(b) 21-50	(c) 51-100	(7) 1-YR ALWPER 100 EQUIP CNTGCY	(8) DEPOT MAINT ALWPER 100 EQUIP	(9) ILLUSTRATION (a) FIG NO	(b) ITEM NO
		FUNCTIONAL GROUP - 60 BULK MATERIALS		CH-47									
		CONTINUED ALUMINUM ALLOY,0.380 IN.ID, 0.432 IN.OD,1/2 IN.LG,FOR 3/8 IN.OD TUBING										BULK	
PB-FZ-Z	4730-278-8469	AN937D4	88044	CROSS,BOSS-ALUMINUM ALLOY.... 7/16 IN.-20 NF,INTERNAL,4 ENDS,1-1/2 IN.LG,FOR 1/4 IN.OD TUBING	ABC	EA	*	*	*		*		
PB-FZ-Z	4730-278-9102	AN737RM74	88044	CLAMP,HOSE-CRES..... RADIAL-MACHINE SCREW TYPE, 1-7/8 IN.ID,USED WITH 1-3/4 IN.ID NON-SELF-SEALING HOSE & 1-1/2 IN.ID SELF-SEALING HOSE	ABC	EA	*	*	*		*		
PA-FZ-Z	4730-278-9140	AN737RM91	88044	CLAMP,HOSE-CRES,..... RADIAL-MACHINE SCREW TYPE, 2-13/32 IN.ID,FOR U/W 2 IN. ID SELF-SEALING HOSE	ABC	EA	*	*	*		*		
PB-FZ-Z	4730-278-9442	AN871-6D	88044	FLANGE,PIPE-ALUMINUM ALLOY,.. 9/16 IN.-18 NF,FOR 3/8 IN.OD TUBE	ABC	EA	*	*	*		*		
PB-DZ-Z	4730-278-9443	AN871-8D	88044	FLANGE,PIPE-ALUMINUM ALLOY,.. 3/4 IN.-16 NF,FOR 1/2 IN.OD TUBE	ABC	EA	*	*	*		*		
PA-FZ-Z	4730-279-0163	MS21916D12-10	96906	REDUCER,TUBE-ALUMINUM..... ALLOY,ANODIZED,ONE END 1-1/16 IN.-12N,EXTERNAL,FOR 3/4 IN.OD TUBE,OTHER END 7/8 IN.-14 NF,EXTERNAL,FOR 5/8 IN.OD TUBE W/HEX NUT WRENCHING FEATURE,1-11/16 IN.LG	ABC	EA	*	*	*		*		
PA-HZ-Z	4730-287-0065	MS20819-16D	96906	SLEEVE,FLARED,TUBE FITTING... ALUMINUM ALLOY,ANODIZED, 1.006 IN.ID,1.081 IN.OD, 0.781 IN.LG,FOR 1 IN.OD TUBE	ABC	EA	*	*	*		*		
N PA-DZ-Z	4730-287-0288	AN818-8D	88044	NUT,TUBE COUPLING-ALUMINUM... ALLOY,ANODIZED,3/4 IN.-16 NF,27/32 IN.LG,FOR 1/2 IN. OD TUBE	ABC	EA	*	*	*		*		
PA-FZ-Z	4730-287-0289	AN818-4D	88044	NUT,TUBE COUPLING-ALUMINUM... ALLOY,ANODIZED,7/16 IN.-20 NF,39/64 IN.LG,FOR 1/4 IN. OD TUBE COMP	ABC	EA	*	*	*		*		
PA-FZ-Z	4730-287-0291	AN818-2D	88044	NUT,TUBE COUPLING-ALUMINUM... ALLOY,ANODIZED,5/16 IN.-24 NF,17/32 IN.LG,FOR 1/8 IN. OD TUBE	ABC	EA	*	*	*		*		
C PA-DZ-Z	4730-289-0222	NAS593-16H	80205	NUT,TUBE COUPLING-ALUMINUM...	ABC	EA	*	*	*		*		

(1) SMR CODE	(2) FEDERAL STOCK NUMBER	(3) DESCRIPTION REFERENCE NUMBER & MFR CODE		USABLE ON CODE CH-47	(4) UNIT OF MEAS	(5) QTY INC IN UNIT	(6) 30-DAY DS/GS MAINT ALW (a) 1-20	(b) 21-50	(c) 51-100	(7) 1-YR ALWPER 100 EQUIP CNTGCY	(8) DEPOT MAINT ALWPER 100 EQUIP	(9) ILLUSTRATION (a) FIG NO	(b) ITEM NO
		FUNCTIONAL GROUP - 60	BULK MATERIALS										
			CONTINUED ALLOY,DRILLED HEXAGON, 1-5/16 IN.-12N,1.188 IN.LG, FOR 1 IN.OD TUBE COMP									BULK	
PA-OZ-Z	4730-289-1162	MS21905D8	96906 TEE,TUBE-ALUMINUM ALLOY,3/4.. IN.-16 NF,EXTERNAL,3 ENDS, FOR 1/2 IN.OD TUBE	ABC	EA		*	*	*		*		
PA-FZ-Z	4730-289-1563	NAS591-16H	80205 INVERTED NUT,TUBE COUPLING... ALUMINUM ALLOY,HEX DRILLED HEAD,1-5/16 IN.-12N,0.813 IN.LG,1.012 IN.ID, FOR 1 IN.OD TUBING COMP	ABC	EA		*	*	*		*		
PA-OZ-Z	4730-289-3067	MS21909D8	96906 TEE,TUBE.....	ABC	EA		*	*	*		*		
PA-OZ-Z	4730-289-5438	MS21906D6	96906 CROSS,TUBE-ALUMINUM ALLOY.... 9/16 IN.-18 NF,FOR 3/8 IN. OD TUBE	ABC	EA		*	*	*		*		
PA-FZ-Z	4730-289-8619	MS21922-4	96906 SLEEVE,CLINGH,TUBE FITTING... STEEL,CARBON,0.255 IN.ID, 0.294 IN.OD,0.520 IN.LG,FOR 1/4 IN.OD TUBE COMP	ABC	EA		*	*	*		*		
PA-FZ-Z	4730-289-8620	MS21922-5	96906 SLEEVE,CLINCH,TUBE FITTING... STEEL,CARBON,0.318 IN.ID, 0.360 IN.OD,0.590 IN.LG,FOR 5/16 IN.OD TUBE	ABC	EA		*	*	*		*		
PA-FZ-Z	4730-289-8622	MS21922-12	96906 SLEEVE,CLINCH,TUBE FITTING... STEEL,CARBON,0.758 IN.ID, 0.817 IN.OD,3/4 IN.LG,FOR 3/4 IN.OD TUBE	ABC	EA		*	*	*		*		
PA-OZ-Z	4730-289-8623	MS21922-16	96906 SLEEVE,CLINCH,TUBE FITTING... STEEL,CARBON,1.008 IN.ID, 1.065 IN.OD,0.80 IN.LG,FOR 1 IN.OD TUBE	ABC	EA		*	*	*		*		
PA-FZ-Z	4730-289-8624	MS21922-20	96906 SLEEVE,COUPLING,FLARELESS.... STEEL,1-1/4 IN.THD,1.258 IN.ID,1.320 IN.OD	ABC	EA		*	*	*		*		
PA-OZ-Z	4730-289-8626	MS21913-16	96906 PLUG,MACHINE THREAD-STEEL,... HEX HEAD,1-5/16 IN.-12N, 1-1/16 IN.LG,FOR 1 IN.OD TUBE	ABC	EA		*	*	*		*		
PA-OZ-Z	4730-289-8633	MS21914-3D	96906 CAP,TUBE-ALUMINUM ALLOY..... 3/8 IN.-24 NF,FOR 3/16 IN. OD TUBING	ABC	EA		*	*	*		*		
PB-FZ-Z	4730-302-8641	MS20819-4D	96906 SLEEVE,FLARED,TUBE FITTING... ALUMINUM ALLOY,ANODIZED, 0.255 IN.ID,0.297 IN.OD, 0.406 IN.LG,FOR 1/4 IN.OD TUBING COMP	ABC	EA		*	*	*		*		
PA-FZ-Z	4730-464-4214	NAS594-4	80205 INVERTED NUT,TUBE COUPLING... CRES,7/16 IN.-20 NF,0.610 IN.LG,FOR 1/4 IN.OD TUBE	ABC	EA		*	*	*		*		
PA-OZ-Z	4730-540-6719	MS20819-8C	96906 SLEEVE,FLARED,TUBE FITTING...	ABC	EA		*	*	*		*		

(1) SMR CODE	(2) FEDERAL STOCK NUMBER	(3) DESCRIPTION REFERENCE NUMBER & MFR CODE		USABLE ON CODE	(4) UNIT OF MEAS	(5) QTY INC IN UNIT	(6) 30-DAY DS/GS MAINT ALW (A) 1-20	(B) 21-50	(C) 51-100	(7) LIR ALWPER 100 EQUIP CNTGCY	(8) DEPOT MAINT ALWPER 100 EQUIP	(9) ILLUSTRATION (A) FIG NO	(B) ITEM NO
		FUNCTIONAL GROUP - 60	BULK MATERIALS	CH-47									
			CONTINUED									BULK	
			CRES,0.505 IN.ID,0.562 IN. OD,0.562 IN.LG,FOR 1/2 IN. OD TUBE										
PA-FZ-Z	4730-541-0844	MS27226-16	96906 ELBOW,TUBE TO HOSE-HYDRAULIC, 45 DEG,W/SWIVEL NUT,U/W MIL-H-8794 HOSE COMP	ABC	EA		*	*	*		*		
PA-OZ-Z	4730-541-1755	MS21924D10	96906 NIPPLE,TUBE-ALUMINUM ALLOY,.. 7/8 IN.-14 NF,EXTERNAL,BOTH ENDS,2-1/4 IN.LG,FOR 5/8 IN.OD TUBE	ABC	EA		*	*	*		*		
PA-FZ-Z	4730-541-3154	MS27224-10	96906 ELBOW,TUBE TO HOSE COMP	ABC	EA		*	*	*		*		
PA-FZ-Z	4730-541-3169	MS21905-4	96906 TEE,TUBE-STEEL,7/16 IN.-20... NF,EXTERNAL,3 ENDS,1-3/4 IN.LG,FOR 1/4 IN.OD TUBE	ABC	EA		*	*	*		*		
PA-OZ-Z	4730-541-7725	MS21922-10	96906 SLEEVE,CLINCH,TUBE FITTING... STEEL,0.633 IN.ID,0.682 IN. OD,0.800 IN.LG,FOR 5/8 IN. OD TUBE COMP	ABC	EA		*	*	*		*		
PA-FZ-Z	4730-541-8234	MS87019-6	96906 ELBOW,TUBE TO HOSE-ALUMINUM,. 45 DEG ELBOW,W/SWIVEL NUT, FLARED,FOR U/W MS87027-6 HOSE	ABC	EA		*	*	*		*		
PA-OZ-Z	4730-541-8296	AN929A8	88044 CAP,TUBE-ALUMINUM ALLOY,..... ANODIZED,3/4 IN.-16 NF, INTERNAL,FOR 1/2 IN.OD TUBE	ABC	EA		*	*	*		*		
PA-FZ-Z	4730-541-9105	MS87018-10	96906 ADAPTER,STRAIGHT TUBE TO..... HOSE-ALUMINUM,W/SWIVEL NUT, FLARED,FOR U/W MS87027-10 HOSE COMP	ABC	EA		*	*	*		*		
PA-OZ-Z	4730-554-7397	MS21921-6D	96906 NUT,TUBE COUPLING-ALUMINUM... ALLOY,ANODIZED,9/16 IN.-18 NF,0.800 IN.LG.FOR 3/8 IN. OD TUBE COMP	ABC	EA		*	*	*		*		
PA-OZ-Z	4730-554-7398	MS21922-6	96906 SLEEVE,CLINCH,TUBE FITTING... STEEL,0.380 IN.ID,0.419 IN. OD,0.660 IN.LG,FOR 3/8 IN. OD TUBE COMP	ABC	EA		*	*	*		*		
PA-OZ-Z	4730-554-8015	MS21921-4	96906 NUT,TUBE COUPLING-STEEL,..... CADMIUM PLATED,7/16 IN.-20 NF,0.720 IN.LG,FOR 1/4 IN. OD TUBE COMP	ABC	EA		*	*	*		*		
PA-OZ-Z	4730-554-8018	MS21921-8	96906 NUT,TUBE COUPLING-STEEL,3/4.. IN.-16 NF,0.860 IN.LG,FOR 1/2 IN.OD TUBE	ABC	EA		*	*	*		*		
PA-FZ-Z	4730-555-0595	MS21921-8D	96906 NUT,TUBE COUPLING-ALUMINUM... ALLOY,3/4 IN.-16 NF,0.860 IN.LG,FOR 1/2 IN.OD TUBE COMP	ABC	EA		*	*	*		*		
PA-FZ-Z	4730-555-8196	MS21921-16D	96906 NUT,TUBE COUPLING-ALUMINUM...	ABC	EA		*	*	*		*		

(1) SMR CODE	(2) FEDERAL STOCK NUMBER	(3) DESCRIPTION REFERENCE NUMBER & MFR CODE			USABLE ON CODE CH-47	(4) UNIT OF MEAS	(5) QTY INC IN UNIT	(6) 30-DAY DS/GS MAINT ALW (a) 1-20	(b) 21-50	(c) 51-100	(7) 1-YR ALWPER 100 EQUIP CNTGCY	(8) DEPOT MAINT ALWPER 100 EQUIP	(9) ILLUSTRATION (a) FIG NO	(b) ITEM NO
		FUNCTIONAL GROUP - 60	BULK MATERIALS											
				CONTINUED ALLOY,ANODIZED,1-5/16 IN.-12N,1.050 IN.LG,FOR 1 IN.OD TUBE									BULK	
PA-OZ-Z	4730-555-8203	MS21921D4	96906	NUT,TUBE COUPLING-ALUMINUM... ALLOY,ANODIZED,7/16 IN.-20 NF,0.720 IN.LG,FOR 1/4 IN. OD TUBE COMP	ABC	EA		*	*	*		*		
PA-OZ-Z	4730-555-8204	MS21921-10D	96906	NUT,TUBE COUPLING-ALUMINUM... ALLOY,7/8 IN.-14 NF,FOR 5/8 IN.OD TUBE COMP	ABC	EA		*	*	*		*		
PA-FZ-Z	4730-555-8205	MS21921-12D	96906	NUT,TUBE COUPLING-ALUMINUM... ALLOY,1-1/16 IN.-12N,FOR 3/4 IN.OD TUBE	ABC	EA		*	*	*		*		
PA-FZ-Z	4730-580-2120	MS21922-8	96906	SLEEVE,CLINCH,TUBE FITTING... STEEL,CARBON,0.506 IN.ID, 0.546 IN.OD,3/4 IN.LG,FOR 1/2 IN.OD TUBE COMP	ABC	EA		*	*	*		*		
PA-FZ-Z	4730-580-6453	MS87020-16	96906	ELBOW,TUBE TO HOSE-ALUMINUM,. FLARED,90 DEG ELBOW, W/SWIVEL NUT,FOR U/W MS87027-16 HOSE COMP	ABC	EA		*	*	*		*		
PA-DZ-Z	4730-580-7471	MS20819-4J	96906	SLEEVE,FLARED,TUBE FITTING... CRES,PASSIVATED FINISH, 0.255 IN.ID,0.297 IN.OD, 0.406 IN.LG,FOR 1/4 IN.OD TUBING COMP	ABC	EA						*		
PA-FZ-Z	4730-585-6212	MS87018-16	96906	ADAPTER,STRAIGHT,TUBE TO HOSE ALUMINUM,W/SWIVEL NUT, FLARED,FOR U/W MS87027-16 HOSE COMP	ABC	EA		*	*	*		*		
PA-OZ-Z	4730-595-3102	MS20819-6C	96906	SLEEVE,FLARED TUBE FITTING... STEEL,0.432 IN.ID,0.502 IN. OD,0.500 IN.LG,FOR 3/8 IN. OD TUBE	ABC	EA		*	*	*		*		
PA-FZ-Z	4730-613-1859	MS87018-6	96906	ADAPTER,STRAIGHT,TUBE TO HOSE ALUMINUM,W/SWIVEL NUT, FLARED,FOR U/W MS87027-6 HUSE, COMP	ABC	EA		*	*	*		*		
PA-FZ-Z	4730-618-7378	MS87018-4	96906	ADAPTER,STRAIGHT,TUBE TO HOSE ALUMINUM SOCKET,CARBON STEEL NIPPLE ASSEMBLY, W/SWIVEL NUT,FLARED,FOR U/W MS87027-4 HOSE COMP	ABC	EA		*	*	*		*		
C XB-FZ-Z		NAS652DD16	80205	INVERTED NUT,TUBE COUPLING... ALUMINUM ALLOY,1-5/16 IN.-12N,1.630 IN.LG,FOR 1 IN.OD TUBE	ABC	EA								
PA-FZ-Z	4730-618-8509	NAS593-12	80205	NUT,TUBE COUPLING-ALUMINUM... ALLOY,1-1/16 IN.-12N,1.120	ABC	EA		*	*	*		*		

(1) SMR CODE	(2) FEDERAL STOCK NUMBER	(3) DESCRIPTION REFERENCE NUMBER & MFR CODE		USABLE ON CODE	(4) UNIT OF MEAS	(5) QTY INC IN UNIT	(6) 30-DAY DS/GS MAINT ALW (a) 1-20	(b) 21-50	(c) 51-100	(7) 1 YR ALWPER 100 EQUIP CNTGCY	(8) DEPOT MAINT ALWPER 100 EQUIP	(9) ILLUSTRATION (a) FIG NO	(b) ITEM NO
		FUNCTIONAL GROUP - 60 BULK MATERIALS		CH-47									
			CONTINUED										
			IN.LG,FOR 3/4 IN.OD TUBE									BULK	
PA-OZ-Z	4730-618-8862	MS87020-4	96906 ELBOW,TUBE TO HOSE-ALUMINUM.. SOCKET,CARBON STEEL NIPPLE ASSEMBLY,W/SWIVEL NUT, FLARED,90 DEG ELBOW,FOR U/W MS87027-4 HOSE COMP	ABC	EA		*	*	*		*		
PA-FZ-Z	4730-632-2002	MS87018-8	96906 ADAPTER,STRAIGHT,TUBE TO HOSE ALUMINUM,FLARED,W/SWIVEL NUT,FOR U/W MS87027-8 HOSE COMP	ABC	EA		*	*	*		*		
PA-OZ-Z	4730-640-5829	MS21907D20	96906 ELBOW,TUBE-ALUMINUM ALLOY,... 1-5/8 IN.-12N,2-13/32 IN. LG,FOR 1-1/4 IN.OD TUBE,45 DEG ANGLE	ABC	EA		*	*	*		*		
PB-FZ-Z	4730-640-7213	MS21902D5	96906 NIPPLE,TUBE-ALUMINUM ALLOY,.. 1/2 IN.-20 NF,FOR 5/16 IN.OD TUBE	ABC	EA		*	*	*		*		
PA-FZ-Z	4730-684-6909	MS24392C8	96906 NIPPLE,TUBE-CRES,3/4 IN.-16.. NF,EXTERNAL,BOTH ENDS, 1-9/16 IN.LG,FOR 1/2 IN. OD TUBE	ABC	EA		*	*	*		*		
PB-FZ-Z	4730-684-6911	MS24392-4	96906 NIPPLE,TUBE-STEEL,7/16..... IN.-20 NF,EXTERNAL,BOTH ENDS,1-1/4 IN.LG,FOR 1/4 IN.OD TUBE	ABC	EA		*	*	*		*		
PB-FZ-Z	4730-684-6912	MS24392C4	96906 NIPPLE,TUBE-CRES,7/16 IN.-20. NF,EXTERNAL,BOTH ENDS,1-1/4 IN.LG,FOR 1/4 IN.OD TUBE	ABC	EA		*	*	*		*		
PB-FZ-Z	4730-684-6913	MS24392D16	96906 NIPPLE,TUBE-ALUMIMUM ALLOY... 1-5/16 IN.-12N,EXTERNAL BOTH ENDS,2-3/16 IN.LG, FOR 1 IN.OD TUBE	ABC	EA		*	*	*		*		
PB-FZ-Z	4730-684-6915	MS24392D8	96906 NIPPLE,TUBE-ALUMINUM ALLOY... 3/4 IN.-16 NF,EXTERNAL,BOTH ENDS,1-9/16 IN.LG,FOR 1/2 IN.OD TUBE	ABC	EA		*	*	*		*		
N PA-FZ-Z	4730-684-6916	MS24392D6	96906 NIPPLE,TUBE-ALUMINUM ALLOY... 9/16 IN.-18 NF,EXTERNAL, BOTH ENDS,1-3/8 IN.LG, FOR 3/8 IN.OD TUBE	ABC	EA		*	*	*		*		
PA-OZ-Z	4730-684-7081	NAS593-8	80205 NUT,TUBE COUPLING-ALUMINUM... ALLOY,3/4 IN.-16 NF,1.022 IN.LG,FOR 1/2 IN.OD TUBE	ABC	EA		*	*	*		*		
PA-FZ-Z	4730-684-7157	MS24399D7	96906 REDUCER,TUBE-ALUMINUM ALLOY.. ONE END,9/16 IN.-18 NF, EXTERNAL,FOR 3/8 IN.OD TUBE,OTHER END,7/16 IN.-20 NF,EXTERNAL,FOR 1/4 IN.OD TUBE,W/HEX NUT WRENCHING	ABC	EA		*	*	*		*		

(1) SMR CODE	(2) FEDERAL STOCK NUMBER	(3) DESCRIPTION REFERENCE NUMBER & MFR CODE		USABLE ON CODE CH-47	(4) UNIT OF MEAS	(5) QTY INC IN UNIT	(6) 30-DAY DS/GS MAINT ALW (a) 1-20	(b) 21-50	(c) 51-100	(7) 1-YR ALWPER 100 EQUIP CNTGCY	(8) DEPOT MAINT ALWPER 100 EQUIP	(9) ILLUSTRATION (a) FIG NO	(b) ITEM NO
		FUNCTIONAL GROUP - 60 BULK MATERIALS											
			CONTINUED									BULK	
PB-FZ-Z	4730-684-7161	MS24399D22	96906	FEATURE,1-13/32 IN.LG REDUCER,TUBE-ALUMINUM ALLOY,.. ONE END,1-5/16 IN.-12N, EXTERNAL,FOR 1 IN.OD TUBE, OTHER END,7/16 IN.-20 NF, EXTERNAL,FOR 1/4 IN.OD TUBE,W/HEX NUT WRENCHING FEATURE,1-27/32 IN.LG	ABC	EA		*	*	*		*		
PA-OZ-Z	4730-684-7301	NAS591-4	80205	INVERTED NUT,TUBE-ALUMINUM... ALLOY,7/16 IN.-20 NF,1/2 IN.LG,FOR 1/4 IN.OD TUBE	ABC	EA		*	*	*		*		
PA-OZ-Z	4730-684-7303	NAS591-8	80205	INVERTED NUT,TUBE COUPLING... ALUMINUM ALLOY,3/4 IN.-16 NF,0.660 IN.LG,0.505 IN.ID, FOR 1/2 IN.OD TUBING	ABC	EA		*	*	*		*		
PA-OZ-Z	4730-684-7304	NAS593-4	80205	NUT,TUBE COUPLING-ALUMINUM... ALLOY,7/16 IN.-20 NF,0.917 IN.LG,FOR 1/4 IN.OD TUBE COMP	ABC	EA		*	*	*		*		
PA-OZ-Z	4730-684-7305	NAS593-6	80205	NUT,TUBE COUPLING-ALUMINUM... ALLOY,9/16 IN.-18 NF,0.917 IN.LG,FOR 3/8 IN.OD TUBE COMP	ABC	EA		*	*	*		*		
PA-FZ-Z	4730-709-3887	MS87019-4	96906	ELBOW,TUBE TO HOSE-ALUMINUM.. SOCKET,CARBON STEEL NIPPLE ASSEMBLY,W/SWIVEL NUT, FLARED,45 DEG ELBOW,FOR USE W/MS87027-4 HOSE. COMP	ABC	EA		*	*	*		*		
PA-OZ-Z	4730-720-0231	MS21916-12-8C	96906	REDUCER,TUBE-CRES,1-1/16..... IN.-12N,3/4 IN.-16 NF,FOR 3/4 IN.& 1/2 IN.OD TUBE	ABC	EA		*	*	*		*		
PA-FZ-Z	4730-720-0235	MS21910-4C	96906	TEE,TUBE TO BOSS-CRES,7/16... IN.-20 NF,EXTERNAL,INTERNAL THREAD ON RUN,2.766 IN.LG, FOR 1/4 OD TUBE	ABC	EA		*	*	*		*		
N PA-OZ-Z	4730-720-0288	MS24394-4	96906	ELBOW,TUBE.....	ABC			*	*	*		*		
PA-FZ-Z	4730-720-1166	MS87020-6	96906	ELBOW,TUBE TO HOSE-ALUMINUM,. W/SWIVEL NUT,FLARED,90 DEG. ELBOW,FOR U/W MS87027-6 HOSE COMP	ABC	EA		*	*	*		*		
PB-FZ-Z	4730-720-4984	MS24390D4	96906	TEE,TUBE-ALUMINUM ALLOY,..... 7/16 IN.-20 NF,3 ENDS, FOR 1/4 IN.OD TUBE	ABC	EA		*	*	*		*		
PB-FZ-Z	4730-722-7214	MS24394C4	96906	ELBOW,TUBE-CRES,90 DEG ELBOW, 7/16 IN.-20 NF,EXTERNAL, BOTH ENDS,FOR 1/4 IN.OD TUBE	ABC	EA		*	*	*		*		
PA-OZ-Z	4730-773-2620	3755-6	00624	COUPLING HALF,QUICK..... DISCONNECT	ABC	EA		*	*	*		*		
PA-FZ-Z	4730-795-0945	MS87020-8	96906	ELBOW,TUBE TO HOSE-ALUMINUM,.	ABC	EA		*	*	*		*		

(1) SMR CODE	(2) FEDERAL STOCK NUMBER	(3) DESCRIPTION REFERENCE NUMBER & MFR CODE			USABLE ON CODE	(4) UNIT OF MEAS	(5) QTY INC IN UNIT	(6) 30-DAY DS/GS MAINT ALW (a) 1-20	(b) 21-50	(c) 51-100	(7) 1-YR ALWPER 100 EQUIP CNTGCY	(8) DEPOT MAINT ALWPER 100 EQUIP	(9) ILLUSTRATION (a) FIG NO	(b) ITEM NO
		FUNCTIONAL GROUP - 60	BULK MATERIALS		CH-47									
				CONTINUED W/SWIVEL NUT,FLARED,90 DEG ELBOW,FOR U/W MS87027-8 HOSE COMP									BULK	
PB-FZ-Z	4730-804-1932	MS24396D8	96906	ELBOW,TUBE-ALUMINUM ALLOY,45. DEG ELBOW,3/4 IN.-16 NF, EXTERNAL,BOTH ENDS,FOR 1/2 IN.OD TUBE	ABC	EA		*	*	*		*		
PA-OZ-Z	4730-810-4499	MS21921-6	96906	NUT,TUBE COUPLING-STEEL,..... CARBON,9/16 IN.-18 NF,0.800 IN.LG,FOR 3/8 IN.OD TUBE COMP	ABC	EA		*	*	*		*		
PB-FZ-Z	4730-812-7405	MS24390D8	96906	TEE,TUBE-ALUMINUM ALLOY,3/4.. IN.-16 NF,EXTERNAL,3 ENDS, FOR 1/2 IN.OD TUBE	ABC	EA		*	*	*		*		
PA-FZ-Z	4730-813-6923	MS87019-10	96906	ELBOW,TUBE TO HOSE-ALUMINUM,. FLARED,45 DEG ELBOW, W/SWIVEL NUT,FOR U/W MS87027-10 HOSE	ABC	EA		*	*	*		*		
PA-OZ-Z	4730-815-5424	MS21912-6	96906	TEE,TUBE-STEEL,9/16 IN.-18... NF,EXTERNAL,3 ENDS,FOR 3/8 IN.OD TUBE	ABC	EA		*	*	*		*		
PB-FZ-Z	4730-816-7046	NAS593-10H	80205	NUT,TUBE COUPLING-ALUMINUM... ALLOY,DRILLED HEXAGON,7/8 IN.-14 NF,1.120 IN.LG,FOR 5/8 IN.OD TUBE COMP	ABC	EA		*	*	*		*		
PA-FZ-Z	4730-833-9669	MS21916-16-4	96906	REDUCER,TUBE-STEEL,LARGE..... END 1-5/16 IN.-12N,FOR 1 IN.OD TUBE,SMALL END 7/16 IN.-20 NF,FOR 1/2 IN.OD TUBE	ABC	EA		*	*	*		*		
PA-FZ-Z	4730-842-1139	MS24587-16	96906	ADAPTER,STRAIGHT,TUBE TO..... HOSE-STEEL,7/8 IN.ID FOR 1 IN.OD TUBING COMP	ABC	EA		*	*	*		*		
PA-FZ-Z	4730-842-2199	MS24587D12	96906	ADAPTER,STRAIGHT,TUBE TO HOSE ALUMINUM ALLOY,ANODIZED, W/SWIVEL NUT,FOR U/W MIL-H-8794-12 HOSE COMP	ABC	EA		*	*	*		*		
PA-FZ-Z	4730-843-0269	MS24587-6	96906	ADAPTER,STRAIGHT,TUBE TO HOSE STEEL NIPPLE & NUT,ALUMINUM ALLOY SOCKET,W/SWIVEL NUT, FOR U/W MIL-H-8794-6 HOSE	ABC	EA		*	*	*		*		
PA-FZ-Z	4730-866-1829	MS24392D10	96906	NIPPLE,TUBE-ALUMINUM ALLOY,.. 7/8 IN.-14 NF,BOTH ENDS, 1-53/64 IN.LG,FOR 5/8 IN.OD TUBE	ABC	EA		*	*	*		*		
PA-OZ-Z	4730-866-1835	MS24392D5	96906	NIPPLE,TUBE-ALUMINUM ALLOY,.. 1/2 IN.-20 NF,BOTH ENDS, 1-9/32 IN.LG,FOR 5/16 IN. OD TUBE	ABC	EA		*	*	*		*		
PA-FZ-Z	4730-873-5715	880629-10D	00624	NIPPLE,FLANGED COMP	ABC	EA		*	*	*		*		

(1) SMR CODE	(2) FEDERAL STOCK NUMBER	(3) DESCRIPTION REFERENCE NUMBER & MFR CODE		USABLE ON CODE	(4) UNIT OF MEAS	(5) QTY INC IN UNIT	(6) 30-DAY DS/GS MAINT ALW (a) 1-20	(b) 21-50	(c) 51-100	(7) 1-YR ALWPER 100 EQUIP CNTGCY	(8) DEPOT MAINT ALWPER 100 EQUIP	(9) ILLUSTRATION (a) FIG NO	(b) ITEM NO
		FUNCTIONAL GROUP - 60 BULK MATERIALS		CH-47									
PA-FZ-Z	4730-884-1232	MS27055-10C	96906	ELBOW,TUBE TO HOSE-CRES..... W/SWIVEL NUT,45 DEG FLARED ELBOW,U/W MIL-H-27267-10 HUSE COMP	ABC	EA		*	*	*		*	BULK	
PA-FZ-Z	4730-886-2369	MS27224-6	96906	ELBOW,TUBE TO HOSE-HYDRAULIC. 90 DEG,W/SWIVEL NUT,U/W MIL-H-8794-6 HUSE COMP	ABC	EA		*	*	*		*		
PB-FZ-Z	4730-889-2262	MS24397D151	96906	REDUCER,MACHINE THREAD..... ALUMINUM ALLOY,DRILLED HEX WRENCHING,ONE END,3/4 IN.-16 NF,INTERNAL,FOR 1/2 IN.OD TUBE,OTHER END,7/8 IN.-14 NF,EXTERNAL,FOR 5/8 IN.OD TUBE,1-3/8 IN.LG	ABC	EA		*	*	*		*		
PA-FZ-Z	4730-889-2465	MS27059-4C	96906	ELBOW,TUBE TO HOSE-CRES,..... W/SWIVEL NUT,FLARED,45 DEG ELBOW,FOR U/W MIL-H-27267-4 HOSE COMP	ABC	EA		*	*	*		*		
PA-FZ-Z	4730-889-2466	MS27059-5C	96906	ELBOW,TUBE TO HOSE-CRES,..... FLARED,45 DEG FORGED ELBOW, W/SWIVEL NUT,FOR U/W MIL-H-27267-5 HOSE	ABC	EA		*	*	*		*		
PA-FZ-Z	4730-889-2468	MS27059-6C	96906	ELBOW,TUBE TO HOSE-CRES,..... FLARED,45 DEG FORGED ELBOW, W/SWIVEL NUT,FOR U/W MIL-H-27267-6 HOSE COMP	ABC	EA		*	*	*		*		
PA-FZ-Z	4730-889-2473	MS27053-16	96906	ADAPTER,STRAIGHT,TUBE TO HOSE CRES SOCKET,SLEEVE & WIRE, ALUMINUM ALLOY NIPPLE & NUT,FLARED,W/SWIVEL NUT,FOR U/W MIL-H-27267-16 HOSE COMP	ABC	EA		*	*	*		*		
PA-FZ-Z	4730-889-2474	MS27053-4C	96906	ADAPTER,STRAIGHT,TUBE TO HOSE CRES,FLARED,W/SWIVEL NUT, FOR U/W MIL-H-27267-4 HOSE COMP	ABC	EA		*	*	*		*		
PA-FZ-Z	4730-889-2477	MS27053-10C	96906	ADAPTER,STRAIGHT,TUBE TO HOSE CRES,FLARED,W/SWIVEL NUT, FOR U/W MIL-H-27267-10 HOSE	ABC	EA		*	*	*		*		
PA-FZ-Z	4730-889-2478	MS27053-12C	96906	ADAPTER,STRAIGHT,TUBE TO HOSE CRES,FLARED,W/SWIVEL NUT, FOR U/W MIL-H-27267-12 HOSE	ABC	EA		*	*	*		*		
PA-FZ-Z	4730-919-6785	MS87020-10	96906	ELBOW,TUBE TO HOSE-ALUMINUM,. FLARED,90 DEG ELBOW, W/SWIVEL NUT,FOR U/W MS87027-10 HOSE	ABC	EA		*	*	*		*		
PA-FZ-Z	4730-922-2687	MS27055-10	96906	ELBOW,TUBE,TO HOSE-CRES WIRE, SOCKET & SLEEVE,ALUMINUM ALLOY UNION,NUT,SHOULDER, ELBOW & NIPPLE,FLARED,45	ABC	EA		*	*	*		*		

(1) SMR CODE	(2) FEDERAL STOCK NUMBER	(3) DESCRIPTION REFERENCE NUMBER & MFR CODE		USABLE ON CODE	(4) UNIT OF MEAS	(5) QTY INC IN UNIT	(6) 30-DAY DS/GS MAINT ALW (a) 1-20	(b) 21-50	(c) 51-100	(7) LYR ALWPER 10% EQUIP CNTGCY	(8) DEPOT MAINT ALWPER 1% EQUIP	(9) ILLUSTRATION a FIG NO	b ITEM NO
		FUNCTIONAL GROUP - 60	BULK MATERIALS	CH-47									
			CONTINUED									BULK	
			DEG ELBOW,W/SWIVEL NUT,FOR U/W MIL-H-27267-10 HOSE										
PA-OZ-Z	4730-925-4752	AN815-4D	88044 NIPPLE,TUBE.....	ABC	EA		*	*	*		*		
PA-FZ-Z	4730-929-5705	MS27381-8C	96906 ADAPTER ASSEMBLY-CRES..... W/SWIVEL NUT,USE WITH MIL-H-27267-8 HOSE	ABC	EA		*	*	*		*		
PA-FZ-Z	4730-930-2262	406101	92555 PLUG.....	ABC	EA		*	*	*		*		
PA-FZ-Z	4730-933-0747	MS87021-8	96906 ADAPTER,STRAIGHT,TUBE..... TO HOSE-ALUMINUM,W/SWIVEL NUT,FOR U/W MS87027-8 HOSE COMP	ABC	EA		*	*	*		*		
PA-FZ-Z	4730-936-2180	114HS146-67	77272 ELBOW,HOSE TO BOSS COMP	ABC	EA		*	*	*		*		
XB-OZ-Z		4240-10	98159 INVERTED NUT,TUBE-COMP.....	ABC	EA								
PA-FZ-Z	4730-936-2361	MS87023-20	96906 FITTING ASSEMBLY,ADAPTER-COMP	ABC	EA		*	*	*		*		
PA-FZ-Z	4730-936-2362	MS87021-4	96906 ADAPTER,STRAIGHT,TUBE TO..... HOSE-ALUMINUM SOCKET,CARBON STEEL NIPPLE ASSEMBLY, W/SWIVEL NUT,FOR U/W MS87027-4 HOSE COMP	ABC	EA		*	*	*		*		
PA-FZ-Z	4730-936-2363	MS87021-20	96906 ADAPTER,STRAIGHT,TUBE TO..... HOSE COMP	ABC	EA		*	*	*		*		
PA-FZ-Z	4730-936-2364	MS87021-16	96906 ADAPTER,STRAIGHT,TUBE TO..... HOSE-ALUMINUM W/SWIVEL NUT, FOR U/W MS87027-16 HOSE COMP	ABC	EA		*	*	*		*		
PA-FZ-Z	4730-936-2365	MS87021-12	96906 ADAPTER,STRAIGHT,TUBE TO HOSE ALUMINUM,W/SWIVEL NUT,FOR U/W MS87027-12 HOSE COMP	ABC	EA		*	*	*		*		
PA-FZ-Z	4730-936-2367	MS87023-4	96906 FITTING ASSEMBLY,SWIVEL-COMP.	ABC	EA		*	*	*		*		
PA-OZ-Z	4730-941-3760	NAS591-10	80205 INVERTED NUT,TUBE COUPLING... ALUMINUM ALLOY,7/8 IN.-14 NF,0.813 IN.LG,0.632 IN.ID, FOR 5/8 IN.OD TUBING	ABC	EA		*	*	*		*		
PA-FZ-Z	4730-948-9314	78024-4	00624 ADAPTER,STRAIGHT,TUBE TO HOSE COMP	ABC	EA		*	*	*		*		
PA-FZ-Z	4730-948-9623	78024-6	00624 ADAPTER,STRAIGHT,TUBE COMP .	ABC	EA		*	*	*		*		
PA-FZ-Z	4730-949-1656	76145-4	00624 ELBOW,TUBE TO HOSE COMP	ABC	EA		*	*	*		*		
PB-FZ-Z	4730-967-9514	MS27069-5C	96906 NUT,HOSE COUPLING-CRES,9/16.. IN.-24 NEF,0.411 IN.ID,5/8 IN.OD,0.834 IN.LG,FOR 3/8 IN.OD HOSE	ABC	EA		*	*	*		*		
PA-FZ-Z	4730-967-9522	MS27070-5C	96906 SLEEVE,HOSE COUPLING-CRES,... PASSIVATED FINISH,0.274 IN. ID,7/16 IN.OD,0.285 IN.LG	ABC	EA		*	*	*		*		
PA-FZ-Z	4730-967-9528	MS27070-20C	96906 SLEEVE,HOSE,COUPLING-CRES,... PASSIVATED FINISH,1.160 IN. ID,1.470 IN.OD,0.740 IN.LG	ABC	EA		*	*	*		*		
PB-FZ-Z	4730-969-6665	MS27068-8C	96906 ELBOW,TUBE TO HOSE-CRES,..... FLARED,90 DEG FORGED ELBOW,	ABC	EA		*	*	*		*		

(1) SMR CODE	(2) FEDERAL STOCK NUMBER	(3) DESCRIPTION REFERENCE NUMBER & MFR CODE		USABLE ON CODE CH-47	(4) UNIT OF MEAS	(5) QTY INC IN UNIT	(6) 30-DAY DS/GS MAINT ALW (a) 1-20	(b) 21-50	(c) 51-100	(7) 1-YR ALWPER 100 EQUIP CNTGCY	(8) DEPOT MAINT ALWPER 100 EQUIP	(9) ILLUSTRATION (a) FIG NO	(b) ITEM NO
		FUNCTIONAL GROUP - 60	BULK MATERIALS										
			CONTINUED W/SWIVEL NUT,FOR U/W MIL-H-27267-8 HOSE									BULK	
PB-FZ-Z	4730-969-6666	MS27068-6C	96906 ELBOW,TUBE TO HOSE-CRES,..... FLARED,90 DEG FORGED ELBOW, W/SWIVEL NUT,FOR U/W MIL-H-27267-6 HOSE	ABC	EA		*	*	*		*		
PB-FZ-Z	4730-969-6667	MS27068-5C	96906 ELBOW,TUBE TO HOSE-CRES,..... FLARED,90 DEG FORGED ELBOW, W/SWIVEL NUT,FOR U/W MIL-H-27267-5 HOSE	ABC	EA		*	*	*		*		
PB-FZ-Z	4730-969-6668	MS27068-4C	96906 ELBOW,TUBE TO HOSE-CRES,..... FLARED,90 DEG FORGED ELBOW, W/SWIVEL NUT,FOR U/W MIL-H-27267-4 HOSE	ABC	EA		*	*	*		*		
PB-FZ-Z	4730-969-6670	MS27067-6C	96906 ELBOW,TUBE TO HOSE-CRES,45... DEG FORGED ELBOW,W/SWIVEL NUT,FLARED,FOR U/W MIL-H-27267-6 HOSE	ABC	EA		*	*	*		*		
PB-FZ-Z	4730-969-6671	MS27067-5C	96906 ELBOW,TUBE TO HOSE-CRES,45... DEG FORGED ELBOW,W/SWIVEL NUT,FLARED,FOR U/W MIL-H-27267-5 HOSE	ABC	EA		*	*	*		*		
PB-FZ-Z	4730-969-6672	MS27067-4C	96906 ELBOW,TUBE TO HOSE-CRES,45... DEG FORGED ELBOW,W/SWIVEL NUT,FLARED,FOR U/W MIL-H-27267-4 HOSE	ABC	EA		*	*	*		*		
PA-FZ-Z	4730-978-7001	NAS596-4	80205 NUT,TUBE COUPLING-CRES,..... 7/16 IN.-20 NF,FOR 1/4 IN.OD TUBE	ABC	EA		*	*	*		*		
PA-FZ-Z	4730-982-9736	MS27053-6C	96906 ADAPTER,STRAIGHT,TUBE TO..... HOSE-CRES,FLARED,W/SWIVEL NUT,USE WITH MIL-H-27267-6 HOSE COMP	ABC	EA		*	*	*		*		
PA-OZ-Z	4730-989-3167	NAS592-4E	80205 SLEEVE,COMPRESSION TUBE..... ALUMINUM ALLOY,0.192 IN.ID, 0.382 IN.OD,FOR 1/4 IN.OD TUBE	ABC	EA		*	*	*		*		
PA-OZ-Z	4730-989-3168	NAS592-10E	80205 SLEEVE,COMPRESSION,TUBE,..... HOSE FITTING-ALUMINUM,0.527 IN.ID,0.793 IN.OD,FOR 5/8 IN.OD TUBE	ABC	EA		*	*	*		*		
PA-OZ-Z	4730-989-3169	NAS592-8E	80205 SLEEVE,COMPRESSION,TUBE..... ALUMINUM,0.492 IN.ID, 0.684 IN.OD,FOR 1/2 IN. OD TUBE	ABC	EA		*	*	*		*		
PA-OZ-Z	4730-990-5704	MS24653D4	96906 ELBOW,TUBE-ALUMINUM ALLOY.... 7/16 IN.-20 NF,FOR 1/4 IN. OD TUBE	ABC	EA		*	*	*		*		
PA-OZ-Z	5120-224-3160	RX22	55719 WRENCH,OPEN END BOX-SINGLE...	ABC	EA		*	*	*		*		

(1) SMR CODE	(2) FEDERAL STOCK NUMBER	(3) DESCRIPTION REFERENCE NUMBER & MFR CODE			USABLE ON CODE	(4) UNIT OF MEAS	(5) QTY INC IN UNIT	(6) 30-DAY DS/GS MAINT ALW (a) 1-20	(b) 21-50	(c) 51-100	(7) 1YR ALWPER FOR EQUIP CNTGCY	(8) DEPOT MAINT ALWPER FOR EQUIP	(9) ILLUSTRATION (a) FIG NO	(b) ITEM NO
		FUNCTIONAL GROUP - 60	BULK MATERIALS		CH-47									
				CONTINUED									BULK	
				END,11/16 IN.SIZE,12 POINT TYPE,FED GGG-W-636,TYPE X1V COMP										
PA-OZ-Z	5120-967-8151	220548	92108	NOZZLE,CALKING GUN-2-1/2 IN.. LG,1/8 IN.ORIFICE	ABC	EA		*	*	*		*		
PA-DZ-Z	5305-043-1275	WA1273-3	93697	SCREW,TAPPING,THREAD CUTTING. STEEL,CADMIUM PLATED, RD HEAD,SLOT DRIVE,NO.2-56 NC,0.187 IN.LG	ABC	EA						*		
PB-FZ-Z	5305-044-2255	AN525D416R12	88044	SCREW,MACHINE-ALUMINUM ALLOY, ANODIZED,ROUND EXTENDED WASHER HEAD,RECESSED HEAD, 1/4 IN.-28 NF,3/4 IN.LG, 11/32 IN.GRIP LG	ABC	EA		*	*	*		*		
PA-OZ-Z	5305-045-3179	MS24694S102	96906	SCREW,MACHINE-STEEL ALLOY,... CADMIUM PLATED,FLAT HEAD, RECESSED HEAD,1/4 IN.-28 NF,31/32 IN.LG,7/16 IN.GRIP LG	ABC	EA		*	*	*		*		
XB-FZ-Z		AN525D416R14	88044	SCREW,MACHINE-ALUMINUM ALLOY, ANODIZED,ROUND EXTENDED WASHER HEAD,RECESSED HEAD, 1/4 IN.-28 NF,7/8 IN.LG, 15/32 IN.GRIP LG	ABC	EA								
PA-OZ-Z	5305-051-6521	MS24693S25	96906	SCREW,MACHINE-STEEL,CARBON,.. CADMIUM PLATED,FLAT HEAD, RECESSED HEAD,NO.6-32 NC, 5/16 IN.LG	ABC	EA		*	*	*		*		
PB-FZ-Z	5305-051-7341	MS24693S33	96906	SCREW,MACHINE-STEEL,CARBON,.. CADMIUM PLATED,FLAT HEAD, RECESSED HEAD,NO.6-32 NC, 1-1/8 IN.LG	ABC	EA		*	*	*		*		
PA-OZ-Z	5305-052-6763	NAS514P440-8P	80205	SCREW,MACHINE-STEEL ALLOY,... CADMIUM PLATED,FLAT HEAD, RECESSED HEAD,NO.4-40 NC, 1/2 IN.LG COMP	ABC	EA		*	*	*		*		
PA-FZ-Z	5305-052-8251	MS16698-50	96906	SCREW,CAP,SOCKET HEAD-STEEL.. ALLOY,CADMIUM PLATED,FLAT FILLISTER HEAD,INTERNAL HEX WRENCHING,1/4 IN.-28 NF, 2-1/4 IN.LG,1 IN.GRIP LG	ABC	EA		*	*	*		*		
PA-FZ-Z	5305-052-9501	MS35219-60	96906	SCREW,MACHINE-ALUMINUM ALLOY, ANODIZED,PAN HEAD,RECESSED HEAD,NO.10-32 NF,1-1/4 IN.LG	ABC	EA		*	*	*		*		
PA-OZ-Z	5305-052-9954	MS24619-12	96906	SCREW,TAPPING,THREAD FORMING. STEEL,CARBON,CADMIUM PLATED,FLAT HEAD,RECESSED HEAD,DOG POINT,NO.6-20 THD,	ABC	EA		*	*	*		*		

(1) SMR CODE	(2) FEDERAL STOCK NUMBER	(3) DESCRIPTION REFERENCE NUMBER & MFR CODE		USABLE ON CODE CH-47	(4) UNIT OF MEAS	(5) QTY INC IN UNIT	(6) 30-DAY DS/GS MAINT ALW (a) 1-20	(b) 21-50	(c) 51-100	(7) 1-YR ALWPER 100 EQUIP CNTGCY	(8) DEPOT MAINT ALWPER 100 EQUIP	(9) ILLUSTRATION (a) FIG NO	(b) ITEM NO
		FUNCTIONAL GROUP - 60 BULK MATERIALS											
		CONTINUED										BULK	
		1/2 IN.LG											
PA-FZ-Z	5305-052-9955	MS24619-13	96906	SCREW,TAPPING,THREAD FORMING. STEEL,CARBON,CADMIUM PLATED,FLAT HEAD,RECESSED HEAD,DOG POINT,NO.6-20 THD, 5/8 IN.LG	ABC	EA	*	*	*		*		
PA-OZ-Z	5305-053-9365	MS35266-107	96906	SCREW,MACHINE-STEEL,CARBON,.. CADMIUM PLATED,FILLISTER HEAD,DRILLED HEAD,3/8 IN.-24 NF,1/2 IN.LG	ABC	EA	*	*	*		*		
PB-OZ-Z	5305-054-5647	MS51957-13	96906	SCREW,MACHINE-CRES,PAN HEAD,. RECESSED HEAD, NO.4-40 NC,1/4 IN.LG	ABC	EA	*	*	*		*		
PA-DZ-Z	5305-054-5650	MS51957-16	96906	SCREW,MACHINE-CRES,PASSIVATED FINISH,PAN HEAD,RECESSED HEAD,NO.4-40 NC,7/16 IN.LG	ABC	EA	*	*	*		*		
PA-OZ-Z	5305-054-6652	MS51957-28	96906	SCREW,MACHINE-CRES,PASSIVATED FINISH,PAN HEAD,RECESSED HEAD,NO.6-32 NC,3/8 IN.LG	ABC	EA	*	*	*		*		
PA-OZ-Z	5305-054-6657	MS51957-33	96906	SCREW,MACHINE-CRES,PASSIVATED FINISH,PAN HEAD,RECESSED HEAD,NO.6-32 NC,7/8 IN.LG	ABC	EA	*	*	*		*		
PB-FZ-Z	5305-054-6670	MS51957-45	96906	SCREW,MACHINE-CRES,PASSIVATED FINISH,PAN HEAD,RECESSED HEAD,NO.8-32 NC,1/2 IN.LG	ABC	EA	*	*	*		*		
PA-OZ-Z	5305-055-2797	MS24673-9	96906	SCREW,CAP,SOCKET HEAD-CRES,.. PASSIVATED FINISH,HEX SOCKET,FLAT FILLISTER HEAD, DRILLED HEAD,1/4 IN.-28 NF, 1/2 IN.LG	ABC	EA	*	*	*		*		
PA-FZ-Z	5305-057-0487	MS24694S13	96906	SCREW,MACHINE-STEEL ALLOY,... FLAT HEAD,RECESSED HEAD, NO.8-32 NC,1-1/32 IN.LG	ABC	EA	*	*	*		*		
PA-FZ-Z	5305-058-4005	MS24694S113	96906	SCREW,MACHINE-STEEL ALLOY,... CADMIUM PLATED,FLAT HEAD, RECESSED HEAD,1/4 IN.-28 NF,1-21/32 IN.LG,1-1/8 IN. GRIP LG	ABC	EA	*	*	*		*		
PA-OZ-Z	5305-058-4007	MS24694S115	96906	SCREW,MACHINE-STEEL ALLOY,... CADMIUM PLATED,FLAT HEAD,RECESSED HEAD,1/4 IN.-28 NF,1-25/32 IN.LG	ABC	EA	*	*	*	•	*		
PA-OZ-Z	5305-058-4013	MS24694S108	96906	SCREW,MACHINE-STEEL ALLOY,... CADMIUM PLATED,FLAT HEAD, RECESSED HEAD,1/4 IN.-28 NF,1-11/32 IN.LG,13/16 IN. GRIP LG	ABC	EA	*	*	*		*		
PA-OZ-Z	5305-058-4021	MS24694S123	96906	SCREW,MACHINE-STEEL ALLOY,... CADMIUM PLATED,FLAT HEAD,	ABC	EA	*	*	*		*		

(1) SMR CODE	(2) FEDERAL STOCK NUMBER	(3) REFERENCE NUMBER & MFR CODE	DESCRIPTION	USABLE ON CODE	(4) UNIT OF MEAS	(5) QTY INC IN UNIT	(6) 30-DAY DS/GS MAINT ALW (a) 1-20	(b) 21-50	(c) 51-100	(7) 1 YR ALWPER 100 EQUIP CNTGCY	(8) DEPOT MAINT ALWPER 100 EQUIP	(9) ILLUSTRATION (a) FIG NO	(b) ITEM NO
		FUNCTIONAL GROUP - 60	BULK MATERIALS	CH-47									
			CONTINUED									BULK	
			RECESSED HEAD,1/4 IN.-28 NF,2-9/32 IN.LG										
PB-FZ-Z	5305-059-2490	MS51976-46 96906	SETSCREW.....	ABC	EA		*	*	*		*		
PA-OZ-Z	5305-059-3657	MS51958-61 96906	SCREW,MACHINE-CRES,PASSIVATED FINISH,PAN HEAD,RECESSED HEAD,NO.10-32 NF,3/8 IN.LG	ABC	EA		*	*	*		*		
PA-OZ-Z	5305-059-3661	MS51958-65 96906	SCREW,MACHINE-CRES,PASSIVATED FINISH,PAN HEAD,RECESSED HEAD,NO.10-32 NF,3/4 IN.LG	ABC	EA		*	*	*		*		
PA-FZ-Z	5305-059-3662	MS51958-66 96906	SCREW,MACHINE-CRES,PASSIVATED FINISH,PAN HEAD,RECESSED HEAD,NO.10-32 NF,7/8 IN.LG	ABC	EA		*	*	*		*		
C PA-FZ-Z	5305-059-3663	MS51958-67 96906	SCREW,MACHINE-CRES,PASSIVATED FINISH,PAN HEAD,RECESSED HEAD,NO.10-32 NF,1.00 IN.LG	ABC	EA		*	*	*		*		
PA-OZ-Z	5305-059-3667	MS51958-71 96906	SCREW,MACHINE-CRES,PASSIVATED FINISH,PAN HEAD,RECESSED HEAD,NO.10-32 NF,2 IN.LG	ABC	EA		*	*	*		*		
PA-OZ-Z	5305-059-3676	MS51958-80 96906	SCREW,MACHINE-CRES,PASSIVATED FINISH,PAN HEAD,RECESSED HEAD,1/4 IN.-28 NF,5/8 IN. LG	ABC	EA		*	*	*		*		
PA-OZ-Z	5305-059-4544	MS35190-227 96906	SCREW,MACHINE-STEEL,CADMIUM.. PLATED,CARBON,FLAT HEAD, RECESSED HEAD,NO.4-40 NC, 3/4 IN.LG	ABC	EA		*	*	*		*		
PA-OZ-Z	5305-059-8243	MS35214-18 96906	SCREW,MACHINE-BRASS,BLACK.... OXIDE FINISH,PAN HEAD, RECESSED HEAD,NO.4-40 NC, 3/4 IN.LG	ABC	EA		*	*	*		*		
PA-FZ-Z	5305-059-8685	MS35218-42 96906	SCREW,MACHINE-ALUMINUM ALLOY. PAN HEAD,RECESSED HEAD, NO.8-32 NC,1/2 IN.LG	ABC	EA		*	*	*		*		
PA-OZ-Z	5305-063-3503	MS24693S50 96906	SCREW,MACHINE-STEEL,CARBON,.. FLAT HEAD,RECESSED HEAD, NO.8-32 NC,1/2 IN.LG	ABC	EA		*	*	*		*		
PB-FZ-Z	5305-067-9914	MS24674-7 96906	SCREW,CAP,SOCKET HEAD-CRES,... PASSIVATED FINISH,FLAT FILLISTER HEAD,HEX SOCKET, DRILLED HEAD,NO.8-32 NC,3/8 IN.LG	ABC	EA		*	*	*		*		
PA-FZ-Z	5305-068-0522	MS24621-45 96906	SCREW,TAPPING,THREAD FORMING. STEEL,CARBON,PAN HEAD, RECESSED HEAD,DOG POINT,NO. 10-16 THD,3/4 IN.LG	ABC	EA		*	*	*		*		
PA-HZ-Z	5305-068-0543	MS24678-11 96906	SCREW,CAP,SOCKET HEAD-STEEL.. ALLOY,CADMIUM PLATED,HEX SOCKET,FLAT FILLISTER HEAD, DRILLED HEAD,NO.10-32 NF,	ABC	EA		*	*	*		*		

(1) SMR CODE	(2) FEDERAL STOCK NUMBER	(3) DESCRIPTION REFERENCE NUMBER & MFR CODE		USABLE ON CODE	(4) UNIT OF MEAS	(5) QTY INC IN UNIT	(6) 30-DAY DS/GS MAINT ALW (a) 1-20	(b) 21-50	(c) 51-100	(7) 1YR ALWPER 100 EQUIP CNTGCY	(8) DEPOT MAINT ALWPER 100 EQUIP	(9) ILLUSTRATION (a) FIG NO	(b) ITEM NO
		FUNCTIONAL GROUP - 60	BULK MATERIALS										
			CONTINUED									BULK	
			5/8 IN.LG										
PA-DZ-Z	5305-071-1322	MS51960-65	96906 SCREW,MACHINE-CRES,PASSIVATED FINISH,FLAT HEAD,RECESSED HEAD,NO.10-32 NF,1/2 IN.LG	ABC	EA						*		
PA-FZ-Z	5305-088-9665	MS24693C29	96906 SCREW,MACHINE-CRES,PASSIVATED FINISH,FLAT HEAD,RECESSED HEAD,NO.6-32 NC,5/8 IN.LG,	ABC	EA		*	*	*		*		
XB-FZ-Z		AN507C640R10	88044 SCREW,MACHINE-CRES,FLAT..... HEAD,RECESSED HEAD,NO.6-40 NF,5/8 IN.LG	ABC	EA								
XB-OZ-Z		AN501AD616-22	88044 SCREW,MACHINE-CRES,PASSIVATED FINISH,FILLISTER HEAD, DRILLED HEAD,3/8 IN.-24 NF, 1-3/8 IN.LG	ABC	EA								
XB-OZ-Z		61401100018	89944 SCREW,MACHINE-BRASS,FLAT..... FILLISTER HEAD,SLOT DRIVE, NO.0-80 NF,0.281 IN.LG	ABC	EA								
PA-OZ-Z	5305-127-0198	NAS1189-3P14	80205 SCREW,SELF-LOCKING.....	ABC	EA		*	*	*		*		
PB-HZ-Z	5305-145-6931	AN510B8-4	88044 SCREW,MACHINE-BRASS,FLAT..... HEAD,NO.3-56 NF,1/4 IN.LG	ABC	EA		*	*	*		*		
PA-OZ-Z	5305-150-9208	AN502-10-16	88044 SCREW,MACHINE-STEEL,CADMIUM.. PLATED,FILLISTER HEAD, DRILLED HEAD,NO.10-32 NF,1 IN.LG	ABC	EA		*	*	*		*		
N PA-DZ-Z	5305-150-9211	AN502-10-10	81352 SCREW,MACHINE-STEEL,CADMIUM.. FINISH,FILLISTER HEAD, DRILLED HEAD,NO.10-32 NF, 5/8 IN.LG	ABC	EA						*		
PA-FZ-Z	5305-150-9219	AN503-10-18	88044 SCREW,MACHINE-STEEL,DRILLED.. FILLISTER HEAD,NO.10-24 NC, 1-1/8 IN.LG	ABC	EA		*	*	*		*		
PA-FZ-Z	5305-150-9516	AN502-416-14	88044 SCREW,MACHINE-STEEL,..... FILLISTER HEAD,DRILLED HEAD,1/4 IN.-28 NF,7/8 IN. LG	ABC	EA		*	*	*		*		
PA-FZ-Z	5305-151-1492	AN520-3R5	88044 SCREW,MACHINE-STEEL,RD HEAD.. RECESSED DRIVE,NO.3-56 NF,5/16 IN.LG	ABC	EA		*	*	*		*		
PB-OZ-Z	5305-151-2721	AN502-416-22	88044 SCREW,MACHINE-STEEL..... FILLISTER HEAD,DRILLED HEAD,1/4 IN.-28 NF, 1-3/8 IN.LG	ABC	EA		*	*	*		*		
PA-OZ-Z	5305-165-6954	NAS222-16	80205 SCREW,MACHINE-STEEL,RD..... HEAD,RECESSED HEAD,1/4 IN.-28 NF,1-1/32 IN.LG	ABC	EA		*	*	*		*		
PA-FZ-Z	5305-174-0756	AN520DD10R6	88044 SCREW,MACHINE-ALUMINUM..... ALLOY,RD HEAD,RECESSED HEAD,NO.10-32 NF,3/8 IN.LG	ABC	EA		*	*	*		*		
PA-HZ-Z	5305-177-5475	NAS1173-13L	80205 SCREW,CLOSE TOLERANCE-STEEL..	ABC	EA		*	*	*		*		

(1) SMR CODE	(2) FEDERAL STOCK NUMBER	(3) DESCRIPTION REFERENCE NUMBER & MFR CODE			USABLE ON CODE	(4) UNIT OF MEAS	(5) QTY INC IN UNIT	(6) 30-DAY DS/GS MAINT ALW (a) 1-20	(b) 21-50	(c) 51-100	(7) 1-YR ALWPER 100 EQUIP CNTGCY	(8) DEPOT MAINT ALWPER 100 EQUIP	(9) ILLUSTRATION (a) FIG NO	(b) ITEM NO
		FUNCTIONAL GROUP - 60	BULK MATERIALS		CH-47									
				CONTINUED ALLOY,CADMIUM PLATED, W/NONMETALLIC STRIP TYPE LOCKING ELEMENT,PAN HEAD, TORO-SET,NO.10-32 NF,1.150 IN.LG,0.812 IN.GRIP LG									BULK	
PA-OZ-Z	5305-180-0005	AN525-8R6	88044	SCREW,MACHINE-STEEL,CADMIUM.. OR ZINC PLATED,ROUND EXTENDED WASHER HEAD, RECESSED HEAD,NO.8-36 NF, 3/8 IN.LG,1/32 IN.GRIP LG	ABC	EA		*	*	*		*		
PA-FZ-Z	5305-180-0009	AN525-10R7	88044	SCREW,MACHINE-STEEL,RD HEAD.. EXTENDED,WASHER HEAD, RECESSED HEAD,NO.10-32 NF, 7/16 IN.LG,1/16 IN.GRIP LG	ABC	EA		*	*	*		*		
PA-OZ-Z	5305-182-1365	AN525-10R26	88044	SCREW,MACHINE-STEEL,CADMIUM.. OR ZINC PLATED,ROUND EXTENDED WASHER HEAD, RECESSED HEAD,NO.10-32 NF, 1-5/8 IN.LG,1-7/32 IN.GRIP LG	ABC	EA		*	*	*		*		
PA-FZ-Z	5305-206-2510	MS35215-55	96906	SCREW,MACHINE-BRASS,PAN HEAD. RECESSED DRIVE,NO.10-32 NF,1/2 IN.LG	ABC	EA		*	*	*		*		
PA-FZ-Z	5305-206-8701	AN525D10R20	88044	SCREW,MACHINE-ALUMINUM ALLOY, ANODIZED,ROUND EXTENDED WASHER HEAD,RECESSED HEAD, NO.10-32 NF,1-1/4 IN.LG, 27/32 IN.GRIP LG	ABC	EA		*	*	*		*		
PA-HZ-Z	5305-207-3647	FFIL609	89944	SCREW,MACHINE-BRASS,FLAT..... FILLISTER HEAD,NO.6-40 NF, 9/32 IN.LG	ABC	EA		*	*	*		*		
XB-OZ-Z		FFIL409B	89944	SCREW,MACHINE-BRASS,BLACK.... OXIDE FINISH,FLAT FILLISTER HEAD,NO.4-48 NF, 9/32 IN.LG	ABC	EA								
PA-FZ-Z	5305-207-3903	FFIL303	89944	SCREW,MACHINE-BRASS,FLAT..... FILLISTER HEAD,NO.3-56 NF, 0.093 IN.LG	ABC	EA		*	*	*		*		
PA-FZ-Z	5305-207-3919	FFIL212	89944	SCREW,MACHINE-BRASS,FLAT..... FILLISTER HEAD,NO.2-64 NF,0.375 IN.LG	ABC	EA		*	*	*		*		
PA-HZ-Z	5305-207-5401	FFIL407B	89944	SCREW,MACHINE-BRASS,OXIDE.... FINISH,FLAT FILLISTER HEAD, NO.4-48 NF,7/32 IN.LG	ABC	EA		*	*	*		*		
PB-OZ-Z	5305-207-7465	MS35214-14	96906	SCREW,MACHINE-BRASS,PAN..... HEAD,RECESSED HEAD,NO. 4-40 NC,3/8 IN.LG	ABC	EA		*	*	*		*		
C PA-FZ-Z	5305-207-7468	MS35214-16	96906	SCREW,MACHINE-BRASS,PAN HEAD. RECESSED HEAD,NO.4-40 NC,	ABC	EA		*	*	*		*		

	(1) SMR CODE	(2) FEDERAL STOCK NUMBER	(3) DESCRIPTION REFERENCE NUMBER & MFR CODE		USABLE ON CODE CH-47	(4) UNIT OF MEAS	(5) QTY INC IN UNIT	(6) 30-DAY DS/GS MAINT ALW (a) 1-20	(b) 21-50	(c) 51-100	(7) 1-YR ALWPER 100 EQUIP CNTGCY	(8) DEPOT MAINT ALWPER 100 EQUIP	(9) ILLUSTRATION (a) FIG NO	(b) ITEM NO
			FUNCTIONAL GROUP - 60 BULK MATERIALS											
			CONTINUED										BULK	
			1/2 IN.LG											
C	PA-FZ-Z	5305-225-7105	MS24674-12	96906	SCREW,CAP,SOCKET HEAD-CRES,... PASSIVATED FINISH,FLAT FILLISTER HEAD,HEX SOCKET, DRILLED HEAD,NO.8-32NC, 1.016 IN.LG	ABC	EA		*	*	*		*		
	XB-DZ-Z		NAS609-4-8	80205	SCREW,CAP,SOCKET HEAD..... STEEL,BLACK OXIDE,FLAT FILLISTER HEAD,1/4 IN.-20 NC,0.520 IN.LG,130,000 PSI MIN YS	ABC	EA								
	PA-DZ-Z	5305-250-2141	NAS1189-3P16	80205	SCREW,SELF-LOCKING-STEEL..... ALLOY,CADMIUM PLATED,NYLON LOCKING ELEMENT,FLAT HEAD, RECESSED HEAD,NO.10-32 NF, 1 IN.LG	ABC	EA		*	*	*		*		
	PA-DZ-Z	5305-253-5612	MS21318-15	96906	SCREW,DRIVE-STEEL,CARBON,.... CADMIUM PLATED,RD HEAD, NO.2 THD,1/4 IN.LG	ABC	EA						*		
C	PB-FZ-Z	5305-253-5614	MS21318-20	96906	SCREW,DRIVE-STEEL,CARBON,.... CADMIUM PLATED,ROUND HEAD, NO.4 THD,3/16 IN.LG	ABC	EA						*		
	XB-DZ-Z		AN509C416R58	88044	SCREW,MACHINE-CRES,FLAT..... HEAD,RECESSED HEAD, 1/4 IN.-28 NF,4-5/32 IN.LG	ABC	EA								
	XB-DZ-Z		AN509C416R81	88044	SCREW,MACHINE-CRES,FLAT..... HEAD,RECESSED HEAD, 1/4 IN.-28 NF,7-1/32 IN.LG	ABC	EA								
	PA-FZ-Z	5305-271-5222	AN502-10-26	88044	SCREW,MACHINE-STEEL..... FILLISTER HEAD,DRILLED HEAD,NO.10-32 NF,1-5/8 IN.LG	ABC	EA		*	*	*		*		
	PA-DZ-Z	5305-271-5230	AN502-10-4	88044	SCREW,MACHINE-STEEL..... FILLISTER HEAD,DRILLED HEAD,NO.10-32 NF,1/4 IN.LG	ABC	EA		*	*	*		*		
	PA-DZ-Z	5305-273-5342	AN525-832R12	88044	SCREW,MACHINE-STEEL,CADMIUM.. OR ZINC PLATED,ROUND EXTENDED WASHER HEAD, RECESSED HEAD,NO.8-32 NC, 3/4 IN.LG,11/32 IN.GRIP LG	ABC	EA		*	*	*		*		
	PB-DZ-Z	5305-273-6234	AN148557	88044	SCREW,CAP,SOCKET HEAD-STEEL,. CADMIUM PLATED,HEX SOCKET, DRILLED HEAD,NO.10-32 NF, 1/2 IN.LG	ABC	EA						*		
	PA-DZ-Z	5305-273-6438	MS24677-22	96906	SCREW,CAP,SOCKET HEAD-STEEL.. ALLOY,CADMIUM PLATED,FLAT FILLISTER HEAD,DRILLED HEAD,INTERNAL HEX WRENCHING,NO.10-24 NC,3/8	ABC	EA						*		

(1) SMR CODE	(2) FEDERAL STOCK NUMBER	(3) DESCRIPTION REFERENCE NUMBER & MFR CODE		USABLE ON CODE	(4) UNIT OF MEAS	(5) QTY INC IN UNIT	(6) 30-DAY DS/GS MAINT ALW (a) 1-20	(b) 21-50	(c) 51-100	(7) 1 YR ALWPFR 100 EQUIP CNTGCY	(8) DEPOT MAINT ALWPER 100 EQUIP	(9) ILLUSTRATION (a) FIG NO	(b) ITEM NO
		FUNCTIONAL GROUP - 60 BULK MATERIALS		CH-47									
			CONTINUED										
PA-FZ-Z	5305-273-7460	MS24678-9	IN.LG 96906 SCREW,CAP,SOCKET HEAD-STEEL.. ALLOY,CADMIUM PLATED,FLAT FILLISTER HEAD,DRILLED HEAD,INTERNAL HEX WRENCHING,NO.10-32 NF,3/8 IN.LG	ABC	EA		*	*	*		*	BULK	
PA-OZ-Z	5305-281-8874	AN525-832R18	88044 SCREW,MACHINE-STEEL,CADMIUM.. OR ZINC PLATED,ROUND EXTENDED WASHER HEAD, RECESSED HEAD,NO.8-32 NC, 1-1/8 IN.LG,23/32 IN.GRIP LG	ABC	EA		*	*	*		*		
PA-OZ-Z	5305-292-4547	AN565A4H6	88044 SETSCREW-STEEL ALLOY,..... HEADLESS,HEX SOCKET DRIVE, FLAT POINT,NO.4-40 NC, 3/8 IN.LG	ABC	EA		*	*	*		*		
PB-FZ-Z	5305-292-5923	AN525D832R12	88044 SCREW,MACHINE-ALUMINUM ALLOY, ANODIZED,ROUND EXTENDED WASHER HEAD,RECESSED HEAD, NO.8-32 NC,3/4 IN.LG,11/32 IN.GRIP LG	ABC	EA		*	*	*		*		
PA-OZ-Z	5305-328-9095	AN520-10R60	88044 SCREW,MACHINE-STEEL,RD HEAD,. RECESSED HEAD,NO.10-32 NF, 3.750 IN.LG	ABC	EA		*	*	*		*		
PA-FZ-Z	5305-369-2158	NAS1172-11L	80205 SCREW,SELF-LOCKING-STEEL..... ALLOY,CADMIUM PLATED,NYLON STRIP TYPE LOCKING ELEMENT, PAN HEAD,TORQUE SET RECESSED HEAD,CLOSE TOLERANCE,NO.8-32 NC,1.026 IN.LG,0.688 IN.GRIP LG	ABC	EA		*	*	*		*		
PB-DZ-Z	5305-527-4566	NAS334CPA14	80205 SCREW,MACHINE-STEEL,RECESSED. HEAD,1/4 IN.-28 NF,1-17-32 IN.LG,CLOSE TOLERANCE	ABC	EA						*		
PA-FZ-Z	5305-531-0432	NAS333CPA7	80205 SCREW,MACHINE-STEEL,CADMIUM.. PLATED,RECESSED HEAD, CLOSE TOLERANCE,NO.10-32 NF,0.906 IN.LG	ABC	EA		*	*	*		*		
PB-DZ-Z	5305-550-3127	NAS514P1032-12	80205 SCREW,MACHINE-ALLOY STEEL.... FLAT HEAD,RECESSED HEAD, NO.10-32 NF,3/4 IN.LG	ABC	EA						*		
PA-FZ-Z	5305-550-3180	FFIL415	COMP 89944 SCREW,MACHINE-BRASS,FLAT..... FILLISTER HEAD,SLOT DRIVE, NO.4-48 NF,0.468 IN.LG	ABC	EA		*	*	*		*		
PA-FZ-Z	5305-551-6029	NAS333CPA5	80205 SCREW,MACHINE-STEEL.....	ABC	EA		*	*	*		*		

(1) SMR CODE	(2) FEDERAL STOCK NUMBER	(3) DESCRIPTION REFERENCE NUMBER & MFR CODE		USABLE ON CODE CH-47	(4) UNIT OF MEAS	(5) QTY INC IN UNIT	(6) 30-DAY DS/GS MAINT ALW (a) 1-20	(b) 21-50	(c) 51-100	(7) 1-YR ALWPER 100 EQUIP CNTGCY	(8) DEPOT MAINT ALWPER 100 EQUIP	(9) ILLUSTRATION (a) FIG NO	(b) ITEM NO
		FUNCTIONAL GROUP - 60 BULK MATERIALS										BULK	
				CONTINUED									
				CADMIUM PLATED,RECESSED HEAD,CLOSE TOLERANCE, NO.10-32 NF,0.656 IN.LG									
PA-FZ-Z	5305-551-6451	NAS333CPA10	80205	SCREW,MACHINE-STEEL,CADMIUM.. PLATED,RECESSED HEAD, CLOSE TOLERANCE,NO.10-32 NF,1.031 IN.LG	ABC	EA	*	*	*		*		
PA-OZ-Z	5305-576-1499	AN525-832R16	88044	SCREW,MACHINE-STEEL,CADMIUM.. OR ZINC PLATED,ROUND EXTENDED WASHER HEAD, RECESSED HEAD,NO.8-32 NC,1 IN.LG,19/32 IN.GRIP LG	ABC	EA	*	*	*		*		
PA-OZ-Z	5305-576-7809	AN525D10R11	88044	SCREW,MACHINE-ALUMINUM ALLOY, ANODIZED,ROUND EXTENDED WASHER HEAD,RECESSED HEAD, NO.10-32 NF,11/16 IN.LG, 9/32 IN.GRIP LG	ABC	EA	*	*	*		*		
PB-OZ-Z	5305-576-7810	AN525D10R10	88044	SCREW,MACHINE-ALUMINUM ALLOY, ANODIZED,ROUND EXTENDED WASHER HEAD,RECESSED HEAD, NO.10-32 NF,5/8 IN.LG,7/32 IN.GRIP LG	ABC	EA	*	*	*		*		
PA-OZ-Z	5305-576-7812	AN525D10R18	88044	SCREW,MACHINE-ALUMINUM ALLOY, ANODIZED,ROUND EXTENDED WASHER HEAD,RECESSED HEAD, NO.10-32 NF,1-1/8 IN.LG, 23/32 IN.GRIP LG	ABC	EA	*	*	*		*		
PA-HZ-Z	5305-582-5808	MS35265-31	96906	SCREW,MACHINE-STEEL,CARBON,.. CADMIUM PLATED,FILLISTER HEAD,DRILLED HEAD,NO.6-32 NC,5/8 IN.LG	ABC	EA	*	*	*		*		
PA-OZ-Z	5305-622-9486	MS35266-68	96906	SCREW,MACHINE-STEEL,CARBON,.. CADMIUM PLATED,FILLISTER HEAD,DRILLED HEAD,NO.10-32 NF,1-1/4 IN.LG	ABC	EA	*	*	*		*		
PA-FZ-Z	5305-637-1122	MS35215-42	96906	SCREW,MACHINE-BRASS,BLACK.... OXIDE FINISH,PAN HEAD, RECESSED HEAD,NO.10-32 NF,1/2 IN.LG	ABC	EA	*	*	*		*		
PA-FZ-Z	5305-637-5637	AN520DD10R18	88044	SCREW,MACHINE-STEEL,RD HEAD.. NO.10-32 NF,1-1/8 IN.LG	ABC	EA	*	*	*		*		
PA-FZ-Z	5305-660-2625	MS35265-47	96906	SCREW,MACHINE-STEEL,CARBON,.. CADMIUM PLATED,FILLISTER HEAD,DRILLED HEAD,NO.8-32 NC,3/4 IN.LG	ABC	EA	*	*	*		*		
PB-OZ-Z	5305-690-9766	AN515C8R22	88044	SCREW,MACHINE-CRES,PASSIVATED FINISH,ROUND HEAD,RECESSED HEAD,NO.8-32 NC,1-3/8 IN.LG	ABC	EA	*	*	*		*		
PB-FZ-Z	5305-701-0049	AN525-416R28	88044	SCREW,MACHINE-STEEL,CADMIUM..	ABC	EA	*	*	*		*		

(1) SMR CODE	(2) FEDERAL STOCK NUMBER	(3) DESCRIPTION REFERENCE NUMBER & MFR CODE		USABLE ON CODE	(4) UNIT OF MEAS	(5) QTY INC IN UNIT	(6) 30-DAY DS/GS MAINT ALW (a) 1-20	(b) 21-50	(c) 51-100	(7) 1 YR ALWPER I/C EQUIP CNTGCY	(8) DEPOT MAINT ALWPER I/C EQUIP	(9) ILLUSTRATION (a) FIG NO	(b) ITEM NO
		FUNCTIONAL GROUP - 60 BULK MATERIALS		CH-47									
		CONTINUED OR ZINC PLATED,ROUND EXTENDED WASHER HEAD, RECESSED HEAD,1/4 IN.-28 NF,1-3/4 IN.LG,1-11/32 IN. GRIP LG										BULK	
PA-OZ-Z	5305-705-2030	MS24694S66	96906	SCREW,MACHINE-STEEL ALLOY,... CADMIUM PLATED,FLAT HEAD, RECESSED HEAD,NO.10-32 NF, 1-17/32 IN.LG,1-1/16 IN. GRIP LG	ABC	EA	*	*	*		*		
PA-OZ-Z	5305-705-2250	MS24694S62	96906	SCREW,MACHINE-STEEL ALLOY,... CADMIUM PLATED,FLAT HEAD, RECESSED HEAD,NO.10-32 NF, 1-9/32 IN.LG,13/16 IN.GRIP LG	ABC	EA	*	*	*		*		
PA-OZ-Z	5305-705-2801	MS24694S68	96906	SCREW,MACHINE-STEEL ALLOY,... CADMIUM PLATED,FLAT HEAD, RECESSED HEAD,NO.10-32 NF, 1-21/32 IN.LG,1-3/16 IN. GRIP LG	ABC	EA	*	*	*		*		
PA-OZ-Z	5305-717-5593	MS24693-30	96906	SCREW,MACHINE-CRES,PASSIVATED FINISH,FLAT HEAD,RECESSED HEAD,NO.6-32 NF,3/4 IN.LG	ABC	EA	*	*	*		*		
PA-FZ-Z	5305-719-5346	MS51963-35	96906	SETSCREW-STEEL ALLOY,CADMIUM. PLATED,HEX SOCKET DRIVE,CUP POINT,NO.8-32 NC,1/4 IN.LG	ABC	EA	*	*	*		*		
PA-FZ-Z	5305-721-7603	AN515-4R22	88044	SCREW,MACHINE-STEEL,CARBON,.. CADMIUM PLATED,ROUND HEAD, RECESSED HEAD,NO.4-40 NC, 1-3/8 IN.LG	ABC	EA	*	*	*		*		
PB-OZ-Z	5305-722-4631	MS35492-56	96906	SCREW,WOOD-STEEL,CARBON,..... CADMIUM OR ZINC PLATED,FLAT HEAD,RECESSED HEAD NO.8-15 THD,1-1/2 IN.LG COMP	ABC	EA	*	*	*		*		
PA-OZ-Z	5305-764-0071	MS51959-47	96906	SCREW,MACHINE-CRES,PASSIVATED FINISH,FLAT HEAD,RECESSED HEAD,NO.8-32 NC,3/4 IN.LG	ABC	EA	*	*	*		*		
PA-OZ-Z	5305-764-0084	MS51959-54	96906	SCREW,MACHINE-CRES,PASSIVATED FINISH,FLAT HEAD,RECESSED HEAD,NO.8-32 NC,2-1/4 IN.LG	ABC	EA	*	*	*		*		
C PA-OZ-Z	5305-780-9631	VS10203-1	77272	SCREW,SHOULDER.....	ABC	EA	*	*	*		*		
PA-HZ-Z	5305-803-9742	MS35266-62	96906	SCREW,MACHINE-STEEL,CARBON,.. CADMIUM PLATED,FILLISTER HEAD,DRILLED HEAD,NO.10-32 NF,7/16 IN.LG	ABC	EA	*	*	*		*		
N PA-OZ-Z	5305-808-7832	MS24693S29	96906	SCREW,MACHINE-STEEL,CADMIUM.. PLATEDED,FLAT COUNTERSUNK, NO.6-32 NC,0.626 IN.LG	ABC	EA	*	*	*		*		
PA-OZ-Z	5305-812-1410	AN525D10R9	88044	SCREW,MACHINE-ALUMINUM ALLOY,	ABC	EA	*	*	*		*		

(1) SMR CODE	(2) FEDERAL STOCK NUMBER	(3) DESCRIPTION — REFERENCE NUMBER & MFR CODE			USABLE ON CODE CH-47	(4) UNIT OF MEAS	(5) QTY INC IN UNIT	(6) 30-DAY DS/GS MAINT ALW (a) 1-20	(b) 21-50	(c) 51-100	(7) 1-YR ALWPER 100 EQUIP CNTGCY	(8) DEPOT MAINT ALWPER 100 EQUIP	(9) ILLUSTRATION (a) FIG NO	(b) ITEM NO
		FUNCTIONAL GROUP - 60 BULK MATERIALS											BULK	
				CONTINUED ANODIZED,ROUND EXTENDED WASHER HEAD,RECESSED HEAD, NO.10-32 NF,9/16 IN.LG,5/32 IN.GRIP LG										
PA-OZ-Z	5305-812-8767	NAS514P632-5B	80205	SCREW,MACHINE-STEEL,FLAT..... HEAD,RECESSED HEAD,NO.6-32 NC,5/16 IN.LG	ABC	EA		*	*	*		*		
PA-FZ-Z	5305-816-0694	AN565D2H5	88044	SETSCREW-STEEL ALLOY,CADMIUM. PLATED,HEX SOCKET HEAD,CUP POINT,NO.2-56 NC,5/16 IN.LG	ABC	EA		*	*	*		*		
PA-OZ-Z	5305-820-2541	AN515-8R22	88044	SCREW,MACHINE-STEEL,CARBON,.. RD HEAD,RECESSED HEAD, NO.8-32 NC,1-3/8 IN.LG	ABC	EA		*	*	*		*		
XB-OZ-Z		MS24694C80	96906	SCREW,MACHINE-CRES,PASSIVATED FINISH,FLAT HEAD,RECESSED HEAD,NO.10-32 NF,2-13/32 IN.LG,1-15/16 IN.GRIP LG	ABC	EA								
PA-OZ-Z	5305-824-7165	NAS1189C3P10N	80205	SCREW,SELF-LOCKING-STEEL..... FLAT HEAD,RECESSED HEAD, NO.10-32 NF,0.625 IN.LG, CLOSE TOLERANCE	ABC	EA		*	*	*		*		
PA-OZ-Z	5305-825-1209	AN525-10R32	88044	SCREW,MACHINE-STEEL,CADMIUM.. OR ZINC PLATED,ROUND EXTENDED WASHER HEAD, RECESSED HEAD,NO.10-32 NF,2 IN.LG,1-19/32 IN.GRIP LG	ABC	EA		*	*	*		*		
N PA-FZ-Z	5305-829-1419	MS24693S8	96906	SCREW,MACHINE-STEEL,CADMIUM.. PLATED	ABC	EA		*	*	*		*		
PA-FZ-Z	5305-835-7257	N81P13040C13	03538	SCREW,MACHINE.....	ABC	EA		*	*	*		*		
PA-OZ-Z	5305-836-8476	MS24621-43	96906	SCREW,TAPPING,THREAD FORMING. STEEL,CARBON,CADMIUM PLATED,PAN HEAD,RECESSED HEAD,DOG POINT,NO.10-16 THD,1/2 IN.LG	ABC	EA		*	*	*		*		
XB-FZ-Z		MS24694S332	96906	SCREW,MACHINE-STEEL ALLOY,... CADMIUM PLATED,FLAT HEAD, RECESSED HEAD,9/16 IN.-18 NF,21/32 IN.LG,9/32 IN.GRIP LG	ABC	EA								
PA-HZ-Z	5305-848-9282	NAS1352C06H8	80205	SCREW,CAP,SOCKET HEAD-CRES,.. DRILLED HEAD,NO.6-32 NC,1/2 IN.LG	ABC	EA		*	*	*		*		
PA-OZ-Z	5305-849-8055	AN525D10R12	88044	SCREW,MACHINE-ALUMINUM ALLOY, ANODIZED,ROUND EXTENDED WASHER HEAD,RECESSED HEAD, NO.10-32 NF,3/4 IN.LG,11/32 IN.GRIP LG	ABC	EA		*	*	*		*		
PA-OZ-Z	5305-889-2964	NAS1190-3P7L	80205	SCREW,SELF-LOCKING-STEEL..... ALLOY,PAN HEAD,RECESSED	ABC	EA		*	*	*		*		

	(1) SMR CODE	(2) FEDERAL STOCK NUMBER	(3) DESCRIPTION REFERENCE NUMBER & MFR CODE		USABLE ON CODE	(4) UNIT OF MEAS	(5) QTY INC IN UNIT	(6) 30-DAY DS/GS MAINT ALW (a) 1-20	(b) 21-50	(c) 51-100	(7) 1-YR ALWPER 100 EQUIP CNTGCY	(8) DEPOT MAINT ALWPER 100 EQUIP	(9) ILLUSTRATION (a) FIG NO	(b) ITEM NO
			FUNCTIONAL GROUP - 60 BULK MATERIALS		CH-47									
			CONTINUED											
			HEAD,STRIP TYPE LOCKING ELEMENT,NO.10-32 NF, 0.434 IN.LG										BULK	
	PB-HZ-Z	5305-900-0593	MS24693C268	96906	ABC	EA		*	*	*		*		
	PA-FZ-Z	5305-908-2829	MS24693C8 SCREW,MACHINE-CRES,PASSIVATED FINISH,FLAT HEAD,RECESSED HEAD,NO.10-32 NF,1/4 IN.LG	96906	ABC	EA		*	*	*		*		
	PA-OZ-Z	5305-912-4818	MS35276-261 SCREW,MACHINE-CRES,PASSIVATED FINISH,FLAT HEAD,RECESSED HEAD,NO.4-40 NC,3/4 IN.LG	96906	ABC	EA		*	*	*		*		
	PA-FZ-Z	5305-912-4833	MS35276-265 SCREW,MACHINE-CRES,DRILLED... FILLISTER HEAD,NO.10-32 NF,3/8 IN.LG	96906	ABC	EA		*	*	*		*		
	PA-OZ-Z	5305-912-4837	MS35276-264 SCREW,MACHINE-CRES,PASSIVATED FINISH,FILLISTER HEAD, DRILLED HEAD,NO.10-32 NF, 3/4 IN.LG	96906	ABC	EA		*	*	*		*		
N	PA-FZ-Z	5305-912-7308	MS27039-1-14 SCREW,MACHINE-CRES,PASSIVATED FINISH,FILLISTER HEAD, DRILLED HEAD,NO.10-32 NF, 5/8 IN.LG	96906	ABC	EA						*		
	PA-OZ-Z	5305-913-4084	NAS1191C3P4 SCREW,MACHINE-STEEL,CADMIUM.. PLATED,HEX HEAD,NO DRILLED HEAD,NO.10-32 NF,0.468 IN. LG	80205	ABC	EA		*	*	*		*		
	PA-OZ-Z	5305-915-2576	NAS1132C3 SCREW,SELF-LOCKING-CRES,FLAT. HEAD,FILLISTER HEAD, RECESSED HEAD,NO.10-32 NF, 0.250 IN.LG	80205	ABC	EA		*	*	*		*		
	PA-FZ-Z	5305-917-2684	MS24693A269 SCREW,MACHINE-CRES,PAN..... HEAD,TORQUE SET DRIVE,CLOSE TOLERANCE,NO.8-32 NC,0.464 IN.LG	96906	ABC	EA		*	*	*		*		
	PA-HZ-Z	5305-922-8777	MS35275-202 SCREW,MACHINE-ALUMINUM ALLOY, ANODIZED,FLAT HEAD,RECESSED HEAD,NO.10-32 NF,5/16 IN.LG	96906	ABC	EA		*	*	*		*		
	PA-FZ-Z	5305-922-8778	MS35275-203 SCREW,MACHINE-CRES,PASSIVATED FINISH,FILLISTER HEAD, DRILLED HEAD,NO.2-56 NC, 3/16 IN.LG	96906	ABC	EA		*	*	*		*		
	PA-OZ-Z	5305-925-7856	MS27039-1-05 SCREW,MACHINE-STEEL ALLOY,... CADMIUM PLATED,PAN HEAD, RECESSED HEAD,NO.10-32 NF, 0.344 IN.LG	96906	ABC	EA		*	*	*		*		
C	PA-OZ-Z	5305-925-9675	MS27039-0809 SCREW,MACHINE-STEEL ALLOY.... CADMIUM PLATED,PAN HEAD,	96906	ABC	EA		*	*	*		*		

(1) SMR CODE	(2) FEDERAL STOCK NUMBER	(3) DESCRIPTION REFERENCE NUMBER & MFR CODE			USABLE ON CODE CH-47	(4) UNIT OF MEAS	(5) QTY INC IN UNIT	(6) 30-DAY DS/GS MAINT ALW (a) 1-20	(b) 21-50	(c) 51-100	(7) 1-YR ALWPER 100 EQUIP CNTGCY	(8) DEPOT MAINT ALWPER 100 EQUIP	(9) ILLUSTRATION (a) FIG NO	(b) ITEM NO
		FUNCTIONAL GROUP - 60 BULK MATERIALS												
				CONTINUED RECESSED HEAD,NO.8-32 NC, 0.594 IN.LG,0.156 IN. GRIP LG									BULK	
PA-FZ-Z	5305-925-9731	MS27039DD1-16	96906	SCREW,MACHINE-ALUMINUM..... ALLOY,ANODIZED,PAN HEAD, RECESSED HEAD,NO.10-32 NF, 1.031 IN.LG	ABC	EA		*	*	*		*		
PA-OZ-Z	5305-926-5704	NAS1132C5	80205	SCREW,MACHINE-CRES,PASSIVATED FINISH,PAN HEAD,TORQUE SET RECESSED DRIVE,CLOSE TOLERANCE,NO.8-32 NC,0.588 IN.LG,0.312 IN.GRIP LG	ABC	EA		*	*	*		*		
PA-OZ-Z	5305-926-5705	NAS1133C13	80205	SCREW,MACHINE-CRES,PASSIVATED FINISH,PAN HEAD,TORQUE SET RECESSED DRIVE,CLOSE TOLERANCE,NO.10-32 NF,1.088 IN.LG,0.812 IN.GRIP LG	ABC	EA		*	*	*		*		
XB-OZ-Z		NAS1133C28	80205	SCREW,MACHINE-CRES,PASSIVATED FINISH,PAN HEAD,TORQUE SET RECESSED DRIVE,CLOSE TOLERANCE,NO.10-32 NF,2.026 IN.LG,1-3/4 IN.GRIP LG	ABC	EA								
PA-OZ-Z	5305-926-5712	NAS1173-3L	80205	SCREW,SELF-LOCKING-STEEL,.... CADMIUM PLATED,NYLON LOCKING ELEMENT,PAN HEAD, TORQUE SET DRIVE,CLOSE TOLERANCE,NO.10-32 NF,0.526 IN.LG	ABC	EA		*	*	*		*		
XB-OZ-Z		NAS1173-9L	80205	SCREW,SELF-LOCKING-STEEL..... ALLOY,CADMIUM PLATED,NYLON STRIP TYPE LOCKING ELEMENT, PAN HEAD,TORQUE SET RECESSED HEAD,CLOSE TOLERANCE,NO.10-32 NF,0.900 IN.LG,0.562 IN.GRIP LG	ABC	EA								
PA-OZ-Z	5305-927-0006	NAS1132C4	80205	SCREW,MACHINE-CRES,PASSIVATED FINISH,PAN HEAD,TORQUE SET RECESSED DRIVE,CLOSE TOLERANCE,NO.8-32 NC,0.526 IN.LG,1/4 IN.GRIP LG	ABC	EA		*	*	*		*		
PA-FZ-Z	5305-934-0267	NAS1191C04P8L	80205	SCREW,SELF-LOCKING-STEEL..... ALLOY,FLAT FILLISTER HEAD, NO.4-40 NC,0.500 IN.LG	ABC	EA		*	*	*		*		
PA-OZ-Z	5305-939-0754	MS27039DD4-11	96906	SCREW,MACHINE-ALUMINUM..... ALLOY,PAN HEAD,RECESSED HEAD,1/4 IN.-28 NF, 0.719 IN.LG	ABC	EA		*	*	*		*		
PB-HZ-Z	5305-939-9179	MS35275-261	96906	SCREW,MACHINE-CRES,PASSIVATED FINISH FILLISTER HEAD,	ABC	EA		*	*	*		*		

(1) SMR CODE	(2) FEDERAL STOCK NUMBER	(3) DESCRIPTION REFERENCE NUMBER & MFR CODE			USABLE ON CODE	(4) UNIT OF MEAS	(5) QTY INC IN UNIT	(6) 30-DAY DS GS MAINT ALW (a) 1-20	(b) 21-50	(c) 51-100	(7) 1 YR ALWPER 100 EQUIP CNTGCY	(8) DEPOT MAINT ALWPER 100 EQUIP	(9) ILLUSTRATION (a) FIG NO	(b) ITEM NO
		FUNCTIONAL GROUP - 60	BULK MATERIALS		CH-47									
				CONTINUED									BULK	
PA-OZ-Z	5305-942-2226	MS24693S14	96906	DRILLED HEAD,NO.10-24 NC, 3/8 IN.LG SCREW,MACHINE-STEEL,CARBON,.. CADMIUM PLATED,FLAT HEAD, RECESSED HEAD,NO.4-40 NC, 1-1/2 IN.LG	ABC	EA		*	*	*		*		
PA-FZ-Z	5305-944-5929	MS27039-1-07	96906	SCREW,MACHINE-STEEL ALLOY,... CADMIUM PLATED,PAN HEAD, RECESSED HEAD,NO.10-32 NF, 0.469 IN.LG	ABC	EA		*	*	*		*		
PB-FZ-Z	5305-944-8271	MS27039-0806	96906	SCREW,MACHINE-STEEL ALLOY,... CADMIUM PLATED,PAN HEAD, RECESSED HEAD,NO.8-32 NC, 0.406 IN.LG	ABC	EA		*	*	*		*		
PA-FZ-Z	5305-947-4285	MS27039DD1-18	96906	SCREW,MACHINE-ALUMINUM ALLOY. PAN HEAD,RECESSED HEAD, NO.10-32 NF,1.156 IN.LG	ABC	EA		*	*	*		*		
PA-OZ-Z	5305-950-2888	58495	00502	SCREW,MACHINE-CRES,..... FILLISTER HEAD,DRILLED HEAD,NO.3-48 NC,0.140 IN.LG	ABC	EA		*	*	*		*		
PA-HZ-Z	5305-952-7756	MS35190-279	96906	SCREW,MACHINE-STEEL,CARBON... CADMIUM PLATED,FLAT HEAD, RECESSED HEAD,NO.10-24 NC, 2 IN.LG	ABC	EA		*	*	*		*		
PA-OZ-Z	5305-954-6506	NAS1081-06A7L	80205	SETSCREW-STEEL ALLOY,..... HEADLESS,HEX SOCKET DRIVE, STRIP-TYPE LOCKING ELEMENT, FLAT POINT,NO.6-32 NC, 7/16 IN.LG	ABC	EA		*	*	*		*		
PA-FZ-Z	5305-954-8985	MS35214-35	96906	SCREW,MACHINE-BRASS,BLACK.... OXIDE FINISH,PAN HEAD, RECESSED HEAD,NO.6-32 NC,2 IN.LG	ABC	EA		*	*	*		*		
PB-HZ-Z	5305-954-8994	MS35214-57	96906	SCREW,MACHINE-BRASS,PAN..... HEAD,RECESSED HEAD,NO. 10-24 NC,3/4 IN.LG	ABC	EA		*	*	*		*		
PB-OZ-Z	5305-957-2387	MS24693B852	96906	SCREW,MACHINE-BRASS,BLACK.... OXIDE FINISH,FLAT HEAD, RECESSED HEAD,NO.8-32 NC, 3/4 IN.LG	ABC	EA		*	*	*		*		
PA-OZ-Z	5305-958-0664	MS35207-244	96906	SCREW,MACHINE-STEEL,CARBON,.. CADMIUM PLATED,PAN HEAD, RECESSED HEAD,NO.8-36 NF, 7/16 IN.LG	ABC	EA		*	*	*		*		
PB-FZ-Z	5305-958-1011	MS35219-56	96906	SCREW,MACHINE-ALUMINUM ALLOY. ANODIZED,PAN HEAD,RECESSED HEAD,NO.10-32 NF,5/8 IN.LG	ABC	EA		*	*	*		*		
PA-FZ-Z	5305-958-1012	MS35219-57	96906	SCREW,MACHINE-ALUMINUM ALLOY.	ABC	EA		*	*	*		*		

	(1) SMR CODE	(2) FEDERAL STOCK NUMBER	(3) DESCRIPTION REFERENCE NUMBER & MFR CODE			USABLE ON CODE CH-47	(4) UNIT OF MEAS	(5) QTY INC IN UNIT	(6) 30-DAY DS/GS MAINT ALW (a) 1-20	(b) 21-50	(c) 51-100	(7) 1-YR ALWPER 100 EQUIP CNTGCY	(8) DEPOT MAINT ALWPER 100 EQUIP	(9) ILLUSTRATION (a) FIG NO	(b) ITEM NO
			FUNCTIONAL GROUP - 60 BULK MATERIALS												
			CONTINUED											BULK	
			ANODIZED,PAN HEAD,RECESSED HEAD,NO.10-32 NF,3/4 IN.LG												
	PA-OZ-Z	5305-958-5451	MS35190-239	96906	SCREW,MACHINE-STEEL,CARBON,... FLAT HEAD,RECESSED HEAD, NO.6-32 NC,5/8 IN.LG	ABC	EA		*	*	*		*		
	PB-HZ-Z	5305-958-5477	MS35190-254	96906	SCREW,MACHINE-STEEL,CARBON... FLAT HEAD,RECESSED HEAD, NO.8-32 NC,5/8 IN.LG	ABC	EA		*	*	*		*		
	PB-OZ-Z	5305-958-7483	MS16997-151	96906	SCREW,CAP,SOCKET HEAD-STEEL.. ALLOY,CADMIUM PLATED,FLAT FILLISTER HEAD,INTERNAL HEX WRENCHING,1/2 IN.-13 NC, 3-1/2 IN.LG,1-1/2 IN.GRIP LG COMP	ABC	EA						*		
C	PB-HZ-Z	5305-959-2680	MS35190-278	96906	SCREW,MACHINE-STEEL,CARBON... CADMIUM PLATED,FLAT HEAD, RECESSED HEAD,NO.10-24 NC, 2 IN.LG	ABC	EA		*	*	*		*		
	PA-DZ-Z	5305-959-2716	MS35190-216	96906	SCREW,MACHINE-STEEL,CARBON,.. CADMIUM PLATED,FLAT HEAD, RECESSED HEAD,NO.2-56 NC, 5/8 IN.LG	ABC	EA		*	*	*		*		
	PA-OZ-Z	5305-964-0780	MS35190-256	96906	SCREW,MACHINE-STEEL,CARBON,.. CADMIUM PLATED,FLAT HEAD, RECESSED HEAD,NO.8-32 NC, 7/8 IN.LG	ABC	EA		*	*	*		*		
	PA-FZ-Z	5305-964-2845	MS24694S51	96906	SCREW,MACHINE-STEEL ALLOY,... CADMIUM PLATED,FLAT HEAD, RECESSED HEAD,NO.10-32 NF, 19/32 IN.LG,7/64 IN.GRIP LG	ABC	EA		*	*	*		*		
	PA-OZ-Z	5305-965-5882	MS24693S52	96906	SCREW,MACHINE-STEEL,CARBON,.. CADMIUM PLATED,FLAT HEAD, RECESSED HEAD,NO.8-32 NC, 3/4 IN.LG	ABC	EA		*	*	*		*		
	PA-FZ-Z	5305-969-6495	MS24693C25	96906	SCREW,MACHINE-CRES,PASSIVATED FINISH,FLAT HEAD,RECESSED HEAD,NO.6-32 NC,5/16 IN.LG	ABC	EA		*	*	*		*		
	PB-DZ-Z	5305-983-6658	MS16998-41	96906	SCREW,CAP,SOCKET HEAD-STEEL.. ALLOY,CADMIUM PLATED,FLAT FILLISTER HEAD,HEX SOCKET, 1/4 IN.-28 NF,1/2 IN.LG	ABC	EA							*		
	PA-DZ-Z	5305-983-8084	MS16997-60	96906	SCREW,CAP,SOCKET HEAD-STEEL.. ALLOY,CADMIUM PLATED,FLAT FILLISTER HEAD,INTERNAL HEX WRENCHING,1/4 IN.-20 NC,3/4 IN.LG	ABC	EA							*		
C	PA-HZ-Z	5305-984-4989	AN515-6R7	88044	SCREW,MACHINE-STEEL,CARBON,.. CADMIUM PLATED,ROUND HEAD, RECESSED HEAD,NO.6-32 NC,	ABC	EA		*	*	*		*		

(1) SMR CODE	(2) FEDERAL STOCK NUMBER	(3) DESCRIPTION REFERENCE NUMBER & MFR CODE		USABLE ON CODE	(4) UNIT OF MEAS	(5) QTY INC IN UNIT	(6) 30-DAY DS/GS MAINT ALW (a) 1-20	(b) 21-50	(c) 51-100	(7) 1-YR ALWPER 100 EQUIP CNTGCY	(8) DEPOT MAINT ALWPER 100 EQUIP	(9) ILLUSTRATION (a) FIG NO	(b) ITEM NO
		FUNCTIONAL GROUP - 60 BULK MATERIALS		CH-47									
			CONTINUED										
PA-OZ-Z	5305-984-4993	MS35206-233	7/16 IN.LG 96906 SCREW,MACHINE-STEEL,CARBON... CADMIUM PLATED,PAN HEAD, RECESSED HEAD,NO.6-32 NC,7/8 IN.LG	ABC	EA		*	*	*		*	BULK	
PA-FZ-Z	5305-984-6192	MS35206-244	96906 SCREW,MACHINE-STEEL,CARBON... CADMIUM PLATED,PAN HEAD, RECESSED HEAD,NO.8-32 NC,7/16 IN.LG	ABC	EA		*	*	*		*		
PA-OZ-Z	5305-984-6197	MS35206-249	96906 SCREW,MACHINE-STEEL,CARBON,.. PAN HEAD,RECESSED HEAD, NO.8-32 NC,1 IN.LG	ABC	EA		*	*	*		*		
PA-FZ-Z	5305-984-6201	MS35206-253	96906 SCREW,MACHINE-STEEL,CARBON,.. PAN HEAD,RECESSED HEAD, NO.8-32 NC,2 IN.LG	ABC	EA		*	*	*		*		
PB-OZ-Z	5305-984-6207	MS35206-260	96906 SCREW,MACHINE-CARBON STEEL,.. PAN HEAD,RECESSED HEAD, NO.10-24 NC,5/16 IN.LG	ABC	EA		*	*	*		*		
PA-OZ-Z	5305-984-6211	MS35206-264	96906 SCREW,MACHINE-CARBON STEEL... PAN HEAD,RECESSED HEAD, NO.10-24 NC,5/8 IN.LG	ABC	EA		*	*	*		*		
PA-FZ-Z	5305-984-6213	MS35206-266	96906 SCREW,MACHINE-STEEL,CARBON,.. PAN HEAD,RECESSED HEAD, NO.10-24 NC,7/8 IN.LG	ABC	EA		*	*	*		*		
PA-OZ-Z	5305-984-6214	MS35206-267	96906 SCREW,MACHINE-STEEL,CARBON... CADMIUM PLATED,PAN HEAD, RECESSED HEAD,NO.10-24 NC,1 IN.LG	ABC	EA		*	*	*		*		
PA-OZ-Z	5305-984-6215	MS35206-268	96906 SCREW,MACHINE-CARBON STEEL... PAN HEAD,RECESSED HEAD, NO.10-24 NC,1-1/4 IN.LG	ABC	EA		*	*	*		*		
C PA-HZ-Z	5305-984-7341	MS35191-273	96906 SCREW,MACHINE-STEEL,CARBON... CADMIUM PLATED,FLAT HEAD, RECESSED HEAD,NO.10-32 NF, 5/8 IN.LG	ABC	EA		*	*	*		*		
PA-HZ-Z	5305-988-5308	NAS1351C3H10	80205 SCREW,CAP,SOCKET HEAD-CRES... DRILLED HEAD,NO.10-33 NF, 5/8 IN.LG	ABC	EA		*	*	*		*		
PB-OZ-Z	5305-989-0682	MS35206-205	96906 SCREW,MACHINE-STEEL,CARBON,.. CADMIUM PLATED,PAN HEAD, RECESSED HEAD,NO.2-56 NC, 3/8 IN.LG	ABC	EA		*	*	*		*		
PA-OZ-Z	5305-989-4864	MS35207-245	96906 SCREW,MACHINE-STEEL,CARBON... CADMIUM PLATED,PAN HEAD, RECESSED HEAD,NO.8-36 NF, 1/2 IN.LG	ABC	EA		*	*	*		*		
PA-OZ-Z	5305-989-6265	MS35207-262	96906 SCREW,MACHINE-STEEL,CARBON,.. CADMIUM PLATED,PAN HEAD,	ABC	EA		*	*	*		*		

(1) SMR CODE	(2) FEDERAL STOCK NUMBER	(3) DESCRIPTION REFERENCE NUMBER & MFR CODE		USABLE ON CODE CH-47	(4) UNIT OF MEAS	(5) QTY INC IN UNIT	(6) 30-DAY DS/GS MAINT ALW (a) 1-20	(b) 21-50	(c) 51-100	(7) 1-YR ALWPER 100 EQUIP CNTGCY	(8) DEPOT MAINT ALWPER 100 EQUIP	(9) ILLUSTRATION (a) FIG NO	(b) ITEM NO
		FUNCTIONAL GROUP - 60 BULK MATERIALS										BULK	
			CONTINUED RECESSED HEAD,NO.10-32 NF,7/16 IN.LG										
PA-OZ-Z	5305-989-7434	MS35207-263	96906 SCREW,MACHINE-STEEL,CARBON,... CADMIUM PLATED,PAN HEAD, RECESSED HEAD,NO.10-32 NF, 1/2 IN.LG	ABC	EA		*	*	*		*		
PA-OZ-Z	5305-990-6444	MS35207-261	96906 SCREW,MACHINE-STEEL,CARBON,... CADMIUM PLATED,PAN HEAD, RECESSED HEAD,NO.10-32 NF, 3/8 IN.LG	ABC	EA		*	*	*		*		
PB-FZ-Z	5305-993-1612	MS24674-8	96906 SCREW,CAP,SOCKET HEAD-CRES,... PASSIVATED FINISH,FLAT FILLISTER HEAD,HEX SOCKET, DRILLED HEAD,NO.8-32 NC,1/2 IN.LG	ABC	EA		*	*	*		*		
PA-OZ-Z	5305-993-2464	MS35207-288	96906 SCREW,MACHINE-CARBON STEEL... PAN HEAD,RECESSED HEAD, 1/4 IN.-28 NF,2-1/4 IN.LG	ABC	EA		*	*	*		*		
XB-FZ-Z		AN520-3R4	88044 SCREW,MACHINE-STEEL,CARBON... CADMIUM PLATED,ROUND HEAD RECESSED HEAD,NO.3-56 NF, 1/4 IN.LG	ABC	EA								
PA-OZ-Z	5305-995-6311	MS35207-271	96906 SCREW,MACHINE-STEEL,CARBOW... CADMIUM PLATED,PAN HEAD, RECESSED HEAD,NO.10-32 NF,2 IN.LG	ABC	EA		*	*	*		*		
PA-HZ-Z	5305-995-6653	MS35190-222	96906 SCREW,MACHINE-STEEL,CARBON... CADMIUM PLATED,FLAT HEAD, RECESSED HEAD,NO.4-40 NC, 5/16 IN.LG	ABC	EA		*	*	*		*		
PB-OZ-Z	5305-999-4095	MS24693B8	96906 SCREW,MACHINE-BRASS,BLACK.... OXIDE COATED,FLAT HEAD, RECESSED HEAD,NO.4-40 NO, 3/4 IN.LG	ABC	EA		*	*	*		*		
PA-FZ-Z	5306-055-7536	NAS628-10	80205 BOLT,MACHINE-STEEL ALLOY,.... CADMIUM PLATED,DOUBLE HEX WASHER HEAD,EXTERNAL WRENCHING,1/2 IN.-20 NF, 1.366 IN.LG,5/8 IN.GRIP LG	ABC	EA		*	*	*		*		
PA-FZ-Z	5306-057-8309	AN43BC13A	88044 BOLT,EYE-CRES,1/4 IN.-28 NF.. 1-13/32 IN.LG,15/16 IN.GRIP LG,FOR 3/16 IN.DIA PIN	ABC	EA		*	*	*		*		
PB-FZ-Z	5306-062-2699	MS9088-10	96906 BOLT,MACHINE-STEEL,CADMIUM... PLATED,DOUBLE HEX EXTENDED WASHER HEAD,DRILLED HEAD, NO.10-32 NF,3/4 IN.LG,1/8 IN.GRIP LG	ABC	EA		*	*	*		*		
PA-FZ-Z	5306-070-1894	AN175C23	88044 BOLT,MACHINE-CRES,PASSIVATED.	ABC	EA		*	*	*		*		

(1) SMR CODE	(2) FEDERAL STOCK NUMBER	(3) DESCRIPTION REFERENCE NUMBER & MFR CODE		USABLE ON CODE	(4) UNIT OF MEAS	(5) QTY INC IN UNIT	(6) 30-DAY DS GS MAINT ALW (a) 1-20	(b) 21-50	(c) 51-100	(7) 1 YR ALWPER (D) EQUIP CNTGCY	(8) DEPOT MAINT ALWPER (D) EQUIP	(9) ILLUSTRATION (a) FIG NO	(b) ITEM NO
		FUNCTIONAL GROUP - 60 BULK MATERIALS		CH-47									
			CONTINUED										
			FINISH,HEX HEAD,DRILLED SHANK,CLOSE TOLERANCE,5/16 IN.-24 NF,2-15/32 IN.LG, 1-15/16 IN.GRIP LG									BULK	
C PB-HZ-Z	5306-079-2567	NAS628-25	80205	BOLT,MACHINE-STEEL ALLOY,.... CADMIUM PLATED,DOUBLE HEX WASHER HEAD,EXTERNAL WRENCHING,1/2 IN.-20 NF, 2.303 IN.LG,1.562 IN.GRIP LG	ABC	EA		*	*	*		*		
PA-FZ-Z	5306-087-3748	MS20073-04-10	96906	BOLT,MACHINE-STEEL,CADMIUM... PLATED,HEX HEAD,DRILLED HEAD,1/4 IN.-28 NF,1.031 IN.LG,1/2 IN.GRIP LG	ABC	EA		*	*	*		*		
PA-OZ-Z	5306-088-7846	MS9088-28	96906	BOLT,MACHINE-STEEL,CADMIUM... PLATED,DOUBLE HEX EXTENDED WASHER HEAD,DRILLED HEAD, NO.10-32 NF,2 IN.LG,1.375 IN.GRIP LG	ABC	EA		*	*	*		*		
N PA-OZ-Z	5306-089-3209	NAS1308-91DW	80205	BOLT,SHEAR-STEEL,DISHED HEX.. HEAD,DRILLED,1/2 IN.-20 NF, 1.015 IN.LG	ABC	EA		*	*	*		*		
PA-OZ-Z	5306-141-4513	AN174H22A	88044	BOLT,MACHINE-STEEL,HEX..... HEAD,DRILLED HEAD,CLOSE TOLERANCE,1/4 IN.-28 NF, 2-9/32 IN.LG	ABC	EA		*	*	*		*		
PA-OZ-Z	5306-141-4514	AN174H25A	88044	BOLT,MACHINE-STEEL,HEX..... HEAD,DRILLED HEAD,CLOSE TOLERANCE,1/4 IN.-28 NF, 2-21/32 IN.LG	ABC	EA		*	*	*		*		
PA-FZ-Z	5306-141-4515	AN174H31A	88044	BOLT,MACHINE-STEEL,CADMIUM... PLATED,HEX HEAD,DRILLED HEAD,CLOSE TOLERANCE,1/4 IN.-28 NF,3-5/32 IN.LG, 2-11/16 IN.GRIP LG	ABC	EA		*	*	*		*		
PA-OZ-Z	5306-141-4517	AN174H5A	88044	BOLT,MACHINE-STEEL,CADMIUM... PLATED,HEX HEAD,DRILLED HEAD,CLOSE TOLERANCE,1/4 IN.-28 NF,21/32 IN.LG,3/16 IN.GRIP LG	ABC	EA		*	*	*		*		
PA-FZ-Z	5306-141-4524	AN173H6A	88044	BOLT,MACHINE-STEEL,CADMIUM... PLATED,HEX HEAD,DRILLED HEAD,CLOSE TOLERANCE,NO. 10-32 NF,25/32 IN.LG,3/8 IN.GRIP LG	ABC	EA		*	*	*		*		
PA-OZ-Z	5306-144-3852	AN25-16	88044	BOLT,CLEVIS-STEEL,BUTTON..... HEAD,DRILLED SHANK,5/16 IN.-24 NF,1-3/64 IN.LG	ABC	EA		*	*	*		*		
PA-OZ-Z	5306-144-4004	AN6-12A	88044	BOLT,MACHINE-STEEL,HEX HEAD..	ABC	EA		*	*	*		*		

(1) SMR CODE	(2) FEDERAL STOCK NUMBER	(3) DESCRIPTION REFERENCE NUMBER & MFR CODE		USABLE ON CODE CH-47	(4) UNIT OF MEAS	(5) QTY INC IN UNIT	(6) 30-DAY DS/GS MAINT ALW (a) 1-20	(b) 21-50	(c) 51-100	(7) 1-YR ALWPER 100 EQUIP CNTGCY	(8) DEPOT MAINT ALWPER 100 EQUIP	(9) ILLUSTRATION (a) FIG NO	(b) ITEM NO
		FUNCTIONAL GROUP - 60 BULK MATERIALS										BULK	
				CONTINUED DRILLED HEAD & SHANK,3/8 IN.-24 NF,1-21/64 IN.LG									
PA-OZ-Z	5306-145-7022	AN3C7	88044	BOLT,MACHINE-CRES,PASSIVATED. FINISH,HEX HEAD,DRILLED SHANK,NO.10-32 NF,29/32 IN. LG,1/2 IN.GRIP LG	ABC	EA	*	*	*		*		
PB-FZ-Z	5306-145-7029	AN174H6	88044	BOLT,MACHINE-STEEL,HEX..... HEAD,DRILLED HEAD & SHANK, CLOSE TOLERANCE,1/4 IN.-28 NF,25/32 IN.LG	ABC	EA	*	*	*		*		
PA-OZ-Z	5306-145-7036	AN5-10A	88044	BOLT,MACHINE-STEEL,CADMIUM... PLATED,HEX HEAD,5/16 IN.-24 NF,1-3/32,IN.LG,9/16 IN.GRIP LG	ABC	EA	*	*	*		*		
PA-OZ-Z	5306-145-7719	AN3-43A	88044	BOLT,MACHINE-STEEL,HEX..... HEAD,NO.10-32 NF,4-13/32 IN.LG,4 IN.GRIP LG	ABC	EA	*	*	*		*		
PA-FZ-Z	5306-150-9285	MS20073-05-24	96906	BOLT,MACHINE-STEEL,HEX..... HEAD,DRILLED HEAD,5/16 IN.-24 NF,2.547 IN.LG	ABC	EA	*	*	*		*		
PA-OZ-Z	5306-150-9550	MS20074-06-05	96906	BOLT,MACHINE-STEEL,CADMIUM... PLATED,HEX HEAD,DRILLED HEAD,3/8 IN.-16 NC,0.734 IN.LG,0.062 IN.GRIP LG	ABC	EA	*	*	*		*		
PA-OZ-Z	5306-150-9842	AN174H34A	88044	BOLT,MACHINE-STEEL,HEX..... HEAD,DRILLED HEAD,CLOSE TOLERANCE,1/4 IN.-28 NF, 3-41/64 IN.LG	ABC	EA	*	*	*		*		
PA-OZ-Z	5306-150-9908	AN23-12A	88044	BOLT,CLEVIS-STEEL,BUTTON..... HEAD,NO.10-32 NF, 25/32 IN.LG	ABC	EA	*	*	*		*		
PA-FZ-Z	5306-150-9928	AN23-46A	88044	BOLT,CLEVIS-STEEL,BUTTON..... HEAD,NO.10-32 NF,2-29/32 IN.LG	ABC	EA	*	*	*		*		
C PB-FZ-Z	5306-150-9956	AN177H37	88044	BOLT,MACHINE-STEEL,HEX..... HEAD,DRILLED HEAD & SHANK, CLOSE TOLERANCE,7/16 IN.-20 NF,3-31/32 IN.LG	ABC	EA	*	*	*		*		
PA-OZ-Z	5306-151-0323	AN174H31	88044	BOLT,MACHINE-STEEL,HEX HEAD.. DRILLED HEAD & SHANK, 1/4 IN.-28 NF,CLOSE TOLERANCE,3-5/32 IN.LG, 2-11/16 IN.GRIP LG	ABC	EA	*	*	*		*		
PA-OZ-Z	5306-151-1178	AN175H30	88044	BOLT,MACHINE-CRES,HEX HEAD,.. DRILLED HEAD & SHANK,5/16 IN.-24 NF,3-3/32 IN.LG	ABC	EA	*	*	*		*		
PA-OZ-Z	5306-151-1179	AN175H31	88044	BOLT,MACHINE-STEEL,DRILLED... HEAD AND SHANK,CLOSE TOLERANCE,5/16 IN.-24 NF,	ABC	EA	*	*	*		*		

(1) SMR CODE	(2) FEDERAL STOCK NUMBER	(3) DESCRIPTION REFERENCE NUMBER & MFR CODE		USABLE ON CODE	(4) UNIT OF MEAS.	(5) QTY INC IN UNIT	(6) 30-DAY DS GS MAINT ALW a 1-20	b 21-50	c 51-100	(7) TYR ALWPER 2 EQUIP ONTOCY	(8) DEPOT MAINT ALWPER 1 EQUIP	(9) ILLUSTRATION a FIG NO	b ITEM NO
		FUNCTIONAL GROUP - 60	BULK MATERIALS	CH-47									
			CONTINUED 3-5/32 IN.LG									BULK	
XB-FZ-Z		AN175H42	88044 BOLT,MACHINE-STEEL,CADMIUM... PLATED,HEX HEAD,DRILLED HEAD & SHANK,CLOSE TOLERANCE,5/16 IN.-24 NF, 4-11/32 IN.LG,3-13/16 IN. GRIP LG	ABC	EA								
PA-FZ-Z	5306-151-1194	AN175H50	88044 BOLT,MACHINE-STEEL,CADMIUM... PLATED,HEX HEAD,DRILLED HEAD & SHANK,CLOSE TOLERANCE,5/16 IN.-24 NF, 5-3/32 IN.LG,4-9/16 IN.GRIP LG	ABC	EA		*	*	*		*		
XB-FZ-Z		AN175H54	88044 BOLT,MACHINE-STEEL,HEX..... HEAD,DRILLED HEAD & SHANK, CLOSE TOLERANCE,5/16 IN.-24 NF,5-19/32 IN.LG	ABC	EA								
PA-OZ-Z	5306-151-1412	AN4-24A	88044 BOLT,MACHINE-STEEL,CADMIUM... PLATED,HEX HEAD,1/4 IN.-28 NF,2-17/32 IN.LG, 2-1/16 IN.GRIP LG	ABC	EA		*	*	*		*		
PA-FZ-Z	5306-151-1413	AN4-23A	88044 BOLT,MACHINE-STEEL,CADMIUM... PLATED HEX HEAD,1/4 IN.-28 NF,2-13/32 IN.LG 1-15/16 IN.GRIP LG	ABC	EA		*	*	*		*		
PA-FZ-Z	5306-151-1418	AN4-16A	88044 BOLT,MACHINE-STEEL,CADMIUM... PLATED,HEX HEAD,1/4 IN.-28 NF,1-25/32 IN.LG,1-5/16 IN. GRIP LG	ABC	EA		*	*	*		*		
PB-FZ-Z	5306-151-1512	AN176H35	88044 BOLT,MACHINE-STEEL,CADMIUM... PLATED,HEX HEAD,DRILLED HEAD & SHANK,CLOSE TOLERANCE,3/8 IN.-24 NF, 3-45/64 IN.LG,3-1/16 IN. GRIP LG	ABC	EA		*	*	*		*		
PA-OZ-Z	5306-151-1514	AN176H34	88044 BOLT,MACHINE-STEEL,CADMIUM... PLATED,HEX HEAD,DRILLED HEAD & SHANK,CLOSEE TOLERANCE,3/8 IN.-24 NF, 3-37/64 IN.LG,2-15/16 IN. GRIP LG	ABC	EA		*	*	*		*		
PA-OZ-Z	5306-151-1945	83-7	80049 BOLT,MACHINE.....	ABC	EA		*	*	*		*		
N PA-OZ-Z	5306-151-1964	AN23-12	88044 BOLT,CLEVIS-STEEL,CADMIUM.... PLATED,BUTTON HEAD,DRILLED SHANK,NO.10-32 NF 7/16 IN. GRIP LG	ABC	EA		*	*	*		*		
PA-OZ-Z	5306-151-1967	AN23-15	88044 BOLT,CLEVIS-STEEL,CADMIUM.... PLATED,BUTTON HEAD,DRILLED SHANK,NO.10-32 NF,31/32 IN.	ABC	EA		*	*	*		*		

(1) SMR CODE	(2) FEDERAL STOCK NUMBER	(3) DESCRIPTION REFERENCE NUMBER & MFR CODE			USABLE ON CODE CH-47	(4) UNIT OF MEAS	(5) QTY INC IN UNIT	(6) 30-DAY DS/GS MAINT ALW (a) 1-20	(b) 21-50	(c) 51-100	(7) 1-YR ALWPER 100 EQUIP CNTGCY	(8) DEPOT MAINT ALWPER 100 EQUIP	(9) ILLUSTRATION (a) FIG NO	(b) ITEM NO
		FUNCTIONAL GROUP - 60	BULK MATERIALS											
				CONTINUED									BULK	
				LG,5/8 IN.GRIP LG										
PA-OZ-Z	5306-151-1969	AN23-17	88044	BOLT,CLEVIS-STEEL,CADMIUM.... PLATED,BUTTON HEAD,DRILLED SHANK,NO.10-32 NF,1-3/32 IN.LG,3/4 IN.GRIP LG	ABC	EA		*	*	*		*		
PA-OZ-Z	5306-151-2311	AN23-32	88044	BOLT,CLEVIS-STEEL,CADMIUM.... PLATED,BUTTON HEAD,DRILLED SHANK,NO.10-32 NF,2-1/32 IN.LG,1-11/16 IN.GRIP LG	ABC	EA		*	*	*		*		
PA-OZ-Z	5306-151-2323	AN176H21	88044	BOLT,MACHINE-STEEL,CADMIUM... PLATED,HEX HEAD,DRILLED HEAD & SHANK,CLOSE TOLERANCE,3/8 IN.-24 NF, 2-13/64 IN.LG,1-9/16 IN. GRIP LG	ABC	EA		*	*	*		*		
PA-OZ-Z	5306-151-2326	AN21-12A	88044	BOLT,CLEVIS-STEEL,BUTTON..... HEAD,NO.6-40 NF,25/32 IN.LG	ABC	EA		*	*	*		*		
PA-FZ-Z	5306-151-2540	AN4C6	88044	BOLT,MACHINE-CRES,PASSIVATED. FINISH,HEX HEAD,DRILLED SHANK,1/4 IN.-28 NF,25/32 IN.LG,5/16 IN.GRIP LG	ABC	EA		*	*	*		*		
PA-FZ-Z	5306-151-2592	AN174-12A	88044	BOLT,MACHINE-STEEL,CADMIUM... PLATED,HEX HEAD,CLOSE TOLERANCE,1/4 IN.-28 NF, 1-9/32 IN.LG,13/16 IN.GRIP LG	ABC	EA		*	*	*		*		
N PA-FZ-Z	5306-151-3091	AN178H23	88044	BOLT,CLOSE,TOLERANCE.....	ABC	EA		*	*	*		*		
PA-OZ-Z	5306-156-2278	AN4C21	88044	BOLT,MACHINE-CRES,HEX HEAD,.. DRILLED SHANK,1/4 IN.-28 NF,2-5/32 IN.LG	ABC	EA		*	*	*		*		
PA-FZ-Z	5306-156-2327	AN3C6A	88044	BOLT,MACHINE-CRES,PASSIVATED. FINISH,HEX HEAD,NO.10-32 NF,25/32 IN.LG,3/8 IN.GRIP LG	ABC	EA		*	*	*		*		
PA-OZ-Z	5306-156-2331	AN3C12A	88044	BOLT,MACHINE-CRES,PASSIVATED. FINISH,HEX HEAD,NO.10-32 NF,1-9/32 IN.LG,7/8 IN.GRIP LG	ABC	EA		*	*	*		*		
PA-OZ-Z	5306-156-2339	AN4C7A	88044	BOLT,MACHINE-CRES,PASSIVATED. FINISH,HEX HEAD,1/4 IN.-28 NF,29/32 IN.LG,7/16 IN.GRIP LG	ABC	EA		*	*	*		*		
PA-OZ-Z	5306-156-2345	AN4C15A	88044	BOLT,MACHINE-CRES,HEX HEAD,.. 1/4 IN.-28 NF,1-21/32 IN.LG	ABC	EA		*	*	*		*		
PA-FZ-Z	5306-156-2392	AN24-10A	88044	BOLT,CLEVIS-STEEL,CADMIUM.... PLATED,BUTTON HEAD,1/4 IN.-28 NF,21/32 IN.LG,5/16 IN.GRIP LG	ABC	EA		*	*	*		*		
PA-FZ-Z	5306-156-2524	AN23-22A	88044	BOLT,CLEVIS-STEEL,BUTTON.....	ABC	EA		*	*	*		*		

(1) SMR CODE	(2) FEDERAL STOCK NUMBER	(3) DESCRIPTION REFERENCE NUMBER & MFR CODE		USABLE ON CODE	(4) UNIT OF MEAS	(5) QTY INC IN UNIT	(6) 30-DAY DS/GS MAINT ALW (a) 1-20	(b) 21-50	(c) 51-100	(7) 1YR ALWPER 100 EQUIP CNTGCY	(8) DEPOT MAINT ALWPER 100 EQUIP	(9) ILLUSTRATION (a) FIG NO	(b) ITEM NO
		FUNCTIONAL GROUP - 60 BULK MATERIALS		CH-47									
		CONTINUED											
		HEAD,NO.10-32 NF,1-13/32 IN.LG										BULK	
PA-FZ-Z	5306-156-2525	AN23-23A	88044 BOLT,CLEVIS-STEEL,CADMIUM.... PLATED,BUTTON HEAD,NO.10-32 NF,1-15/32 IN.LG,1-1/8 IN. GRIP LG	ABC	EA		*	*	*		*		
PA-OZ-Z	5306-156-2527	AN23-25A	88044 BOLT,CLEVIS-STEEL,CADMIUM.... PLATED,BUTTON HEAD,NO.10-32 NF,1-19/32 IN.LG,1-1/4 IN. GRIP LG	ABC	EA		*	*	*		*		
PA-OZ-Z	5306-156-2694	AN24-10	88044 BOLT,CLEVIS-STEEL,CADMIUM.... PLATED,BUTTON HEAD,DRILLED SHANK,1/4 IN.-28 NF,21/32 IN.LG,5/16 IN.GRIP LG	ABC	EA		*	*	*		*		
PB-FZ-Z	5306-156-2707	AN176H63	88044 BOLT,MACHINE-STEEL,CADMIUM... PLATED,HEX HEAD,DRILLED HEAD & SHANK,CLOSE TOLERANCE,3/8 IN.-24 NF, 6-29/64 IN.LG,5-13/16 IN. GRIP LG	ABC	EA		*	*	*		*		
PB-FZ-Z	5306-156-2753	AN32-58	88044 BOLT,CLEVIS-STEEL,BUTTON..... HEAD,DRILLED SHANK,3/4 IN.-16 NF,3-11/16 IN.LG	ABC	EA		*	*	*		*		
PB-FZ-Z	5306-156-2757	AN32-66	88044 BOLT,CLEVIS-STEEL,BUTTON..... HEAD,DRILLED SHANK,3/4 IN.-16 NF,4-3/16 IN.LG	ABC	EA		*	*	*		*		
XB-FZ-Z		AN177H27	88044 BOLT,MACHINE-STEEL,CADMIUM... PLATED,HEX HEAD,DRILLED HEAD & SHANK,CLOSE TOLERANCE,7/16 IN.-20 NF, 2-31/32 IN.LG,2-5/16 IN. GRIP LG	ABC	EA								
XB-FZ-Z		AN177H30	88044 BOLT,MACHINE-STEEL,CADMIUM... PLATED,HEX HEAD,DRILLED HEAD & SHANK,CLOSE TOLERANCE,7/16 IN.-20 NF, 3-3/32 IN.LG,2-7/16 IN.GRIP LG	ABC	EA								
PA-DZ-Z	5306-167-3686	AN6-20	88044 BOLT,MACHINE-STEEL,CADMIUM... PLATED,HEX HEAD,DRILLED SHANK,3/8 IN-24 NF,2-5/64 IN.LG,1-7/16 IN.GRIP LG	ABC	EA						*		
PA-FZ-Z	5306-174-3863	AN102810	88044 BOLT,MACHINE-STEEL,DRILLED... HEX HEAD,NO.10-32 NF,5/8 IN.LG	ABC	EA		*	*	*		*		
PB-OZ-Z	5306-174-3964	AN22-22	88044 BOLT,CLEVIS-STEEL,CADMIUM.... PLATED,BUTTON HEAD,DRILLED SHANK,NO.8-36 NF,1-13/32 IN.LG,1-1/8 IN.GRIP LG	ABC	EA		*	*	*		*		
PA-FZ-Z	5306-174-4074	AN176H36	88044 BOLT,MACHINE-STEEL,HEX.....	ABC	EA		*	*	*		*		

(1) SMR CODE	(2) FEDERAL STOCK NUMBER	(3) DESCRIPTION REFERENCE NUMBER & MFR CODE			USABLE ON CODE	(4) UNIT OF MEAS	(5) QTY INC IN UNIT	(6) 30-DAY DS/GS MAINT ALW (a) 1-20	(b) 21-50	(c) 51-100	(7) 1-YR ALWPER 100 EQUIP CNTGCY	(8) DEPOT MAINT ALWPER 100 EQUIP	(9) ILLUSTRATION (a) FIG NO	(b) ITEM NO
		FUNCTIONAL GROUP - 60	BULK MATERIALS		CH-47								BULK	
				CONTINUED HEAD,DRILLED HEAD & SHANK, CLOSE TOLERANCE,3/8 IN.-24 NF,3-53/64 IN.LG										
PA-FZ-Z	5306-180-0456	AN174-36	88044	BOLT,MACHINE-STEEL,CADMIUM... PLATED,HEX HEAD,DRILLED SHANK,CLOSE TOLERANCE,1/4 IN.-28 NF,3-25/32 IN.LG, 3-5/16 IN.GRIP LG	ABC	EA		*	*	*		*		
PA-FZ-Z	5306-180-0464	AN175-7	88044	BOLT,MACHINE-STEEL,CADMIUM... PLATED,HEX HEAD,DRILLED SHANK,CLOSE TOLERANCE,5/16 IN.-24 NF,31/32 IN.LG,7/16 IN.GRIP LG	ABC	EA		*	*	*		*		
PA-FZ-Z	5306-180-0465	AN175-10	88044	BOLT,MACHINE-STEEL,CADMIUM... PLATED,HEX HEAD,DRILLED SHANK,CLOSE TOLERANCE,5/16 IN.-24 NF,1-3/32 IN.LG,9/16 GRIP LG	ABC	EA		*	*	*		*		
PA-OZ-Z	5306-180-1485	AN6-13A	88044	BOLT,MACHINE-STEEL,CADMIUM... PLATED HEX HEAD,3/8 IN.-24 NF,1-29/64 IN.LG,13/16 IN. GRIP LG	ABC	EA		*	*	*		*		
PA-FZ-Z	5306-180-1738	AN174-12	88044	BOLT,MACHINE-STEEL,CADMIUM... PLATED,HEX HEAD,DRILLED SHANK,CLOSE TOLERANCE,1/4 IN.-28 NF,1-9/32 IN.LG, 13/16 IN.GRIP LG	ABC	EA		*	*	*		*		
PA-FZ-Z	5306-180-1784	AN173-11	88044	BOLT,MACHINE-STEEL,CADMIUM... PLATED,HEX HEAD,DRILLED SHANK,CLOSE TOLERANCE,NO. 10-32 NF,1-5/32 IN.LG, 3/4 IN.GRIP LG	ABC	EA		*	*	*		*		
PA-OZ-Z	5306-180-1786	AN173-13	88044	BOLT,MACHINE-STEEL,CADMIUM... PLATED,HEX HEAD,DRILLED SHANK,CLOSE TOLERANCE,NO. 10-32 NF,1-13/32 IN.LG, 1 IN.GRIP LG	ABC	EA		*	*	*		*		
PA-FZ-Z	5306-180-1799	AN174-30	88044	BOLT,MACHINE-STEEL,CADMIUM... PLATED,HEX HEAD,DRILLED SHANK,CLOSE TOLERANCE,1/4 IN.-28 NF,3-1/32 IN.LG, 2-9/16 IN..GRIP LG	ABC	EA		*	*	*		*		
PA-OZ-Z	5306-180-2696	AN3H10	88044	BOLT,MACHINE-STEEL,CADMIUM... PLATED,HEX HEAD,DRILLED HEAD & SHANK,NO.10-32 NF, 1-1/32 IN LG,5/8 IN.GRIP LG	ABC	EA		*	*	*		*		
PA-FZ-Z	5306-180-2731	AN3CH6	88044	BOLT,MACHINE-CRES,PASSIVATED. FINISH,HEX HEAD,DRILLED HEAD & SHANK,NO.10-32 NF,	ABC	EA		*	*	*		*		

(1) SMR CODE	(2) FEDERAL STOCK NUMBER	(3) DESCRIPTION REFERENCE NUMBER & MFR CODE		USABLE ON CODE	(4) UNIT OF MEAS	(5) QTY INC IN UNIT	(6) 30-DAY DS GS MAINT ALW (a) 1-20	(b) 21-50	(c) 51-100	(7) TYP ALWPER 100 EQUIP CNTGCY	(8) DEPOT MAINT ALWPER 100 EQUIP	(9) ILLUSTRATION (a) FIG NO	(b) ITEM NO
		FUNCTIONAL GROUP - 60	BULK MATERIALS	CH-47									
			CONTINUED										
PA-FZ-Z	5306-180-2770	AN3CH12A	25/32 IN.LG,3/8 IN.GRIP LG 88044 BOLT,MACHINE-CRES,PASSIVATED. FINISH,HEX HEAD,DRILLED HEAD,NO.10-32 NF,1-9/32 IN. LG,7/8 IN.GRIP LG	ABC	EA		*	*	*		*	BULK	
PA-OZ-Z	5306-180-3342	AN173-4A	88044 BOLT,MACHINE-STEEL,CADMIUM... PLATED,HEX HEAD,CLOSE TOLERANCE,NO.10-32 NF,17/32 IN.LG,1/8 IN.GRIP LG	ABC	EA		*	*	*		*		
PA-OZ-Z	5306-180-3354	AN4CH13	88044 BOLT,MACHINE-CRES,HEX HEAD,... DRILLED HEAD & SHANK,1/4 IN.-28 NF,1-13/32 IN.LG	ABC	EA		*	*	*		*		
PA-FZ-Z	5306-182-1518	AN173-5A	88044 BOLT,MACHINE-STEEL,HEX HEAD,. CLOSE TOLERANCE,NO.10-32 NF,21/32 IN.LG	ABC	EA		*	*	*		*		
PA-OZ-Z	5306-182-1528	AN4H10	88044 BOLT,MACHINE-STEEL,CADMIUM... PLATED,HEX HEAD,DRILLED HEAD & SHANK,1/4 IN.-28 NF, 1-1/32 IN.LG,9/16 IN.GRIP LG	ABC	EA		*	*	*		*		
PA-FZ-Z	5306-182-1531	AN4H13	88044 BOLT,MACHINE-STEEL,CADMIUM... PLATED HEX HEAD,DRILLED HEAD & SHANK,1/4 IN.-28 NF, 1-13/32 IN.LG,15/16 IN.GRIP LG	ABC	EA		*	*	*		*		
PA-FZ-Z	5306-182-1800	AN174-20A	88044 BOLT,MACHINE-STEEL,CADMIUM... PLATED,HEX HEAD,CLOSE TOLERANCE,1/4 IN.-28 NF, 2-1/32 IN.LG,1-9/16 IN.GRIP LG	ABC	EA		*	*	*		*		
PA-FZ-Z	5306-182-1817	AN5C410	88044 BOLT,MACHINE-CRES,HEX HEAD,.. DRILLED HEAD & SHANK,5/16 IN.-24 NF,1-3/32 IN.LG	ABC	EA		*	*	*		*		
PA-OZ-Z	5306-182-1898	AN3H11	88044 BOLT,MACHINE-STEEL,CADMIUM... PLATED,HEX HEAD,DRILLED HEAD & SHANK,NO.10-32 NF, 1-5/32 IN.LG,3/4 IN.GRIP LG	ABC	EA		*	*	*		*		
PA-FZ-Z	5306-182-1899	AN3H12	88044 BOLT,MACHINE-STEEL,CADMIUM... PLATED,HEX HEAD,DRILLED HEAD & SHANK,NO.10-32 NF, 1-9/32 IN.LG,7/8 IN.GRIP LG	ABC	EA		*	*	*		*		
PA-OZ-Z	5306-182-1915	AN3H14	88044 BOLT,MACHINE-STEEL,CADMIUM... PLATED,HEX HEAD,DRILLED HEAD & SHANK,NO.10-32 NF, 1-17/32 IN.LG,1-1/8 IN.GRIP LG	ABC	EA		*	*	*		*		
PA-OZ-Z	5306-182-1916	AN3H15	88044 BOLT,MACHINE-STEEL,CADMIUM... PLATED,HEX HEAD,DRILLED HEAD & SHANK,NO.10-32 NF,	ABC	EA		*	*	*		*		

(1) SMR CODE	(2) FEDERAL STOCK NUMBER	(3) DESCRIPTION REFERENCE NUMBER & MFR CODE			USABLE ON CODE CH-47	(4) UNIT OF MEAS	(5) QTY INC IN UNIT	(6) 30-DAY DS/GS MAINT ALW (a) 1-20	(b) 21-50	(c) 51-100	(7) 1-YR ALWPER 100 EQUIP CNTGCY	(8) DEPOT MAINT ALWPER 100 EQUIP	(9) ILLUSTRATION (a) FIG NO	(b) ITEM NO
		FUNCTIONAL GROUP - 60	BULK MATERIALS											
				CONTINUED 1-21/32 IN.LG,1-1/4 IN.GRIP LG									BULK	
PA-OZ-Z	5306-182-1918	AN3H17	88044	BOLT,MACHINE-STEEL,CADMIUM... PLATED,HEX HEAD,DRILLED HEAD & SHANK,NO.10-32 NF, 1-29/32 IN.LG,1-1/2 IN.GRIP LG	ABC	EA		*	*	*		*		
PA-OZ-Z	5306-182-1921	AN3H22	88044	BOLT,MACHINE-STEEL,CADIUM.... PLATED,HEX HEAD,DRILLED HEAD & SHANK,NO.10-32 NF, 2-9/32 IN.LG,1-7/8 IN.GRIP LG	ABC	EA		*	*	*		*		
PA-OZ-Z	5306-182-1961	AN4H13A	88044	BOLT,MACHINE-STEEL,HEX..... HEAD,DRILLED HEAD,1/4 IN.-28 NF,1-13/32 IN.LG	ABC	EA		*	*	*		*		
PA-OZ-Z	5306-182-1963	AN4H15A	88044	BOLT,MACHINE-STEEL,HEX..... HEAD,DRILLED HEAD,1/4 IN.-28 NF,1-21/32 IN.LG	ABC	EA		*	*	*		*		
PA-OZ-Z	5306-182-2006	AN3H15A	88044	BOLT,MACHINE-STEEL,CADMIUM... PLATED,HEX HEAD,DRILLED HEAD,NO.10-32 NF,1-21/32 IN.LG,1-1/4 IN.GRIP LG	ABC	EA		*	*	*		*		
PA-FZ-Z	5306-182-2026	AN5H7A	88044	BOLT,MACHINE-STEEL,CADMIUM... PLATED,HEX HEAD,DRILLED HEAD,5/16 IN.-24 NF,31/32 IN.LG,7/16 IN.GRIP LG	ABC	EA		*	*	*		*		
PA-OZ-Z	5306-182-2041	AN3CH5	88044	BOLT,MACHINE-CRES,PASSIVATED. FINISH,HEX HEAD,DRILLED HEAD & SHANK,NO.10-32 NF, 21/32 IN.LG,1/4 IN.GRIP LG	ABC	EA		*	*	*		*		
PA-OZ-Z	5306-182-2056	AN3H3A	88044	BOLT,MACHINE-STEEL CADMIUM... PLATED,HEX HEAD,DRILLED HEAD,NO.10-32 NF,15/32 IN. LG,1/16 IN.GRIP LG	ABC	EA		*	*	*		*		
PA-OZ-Z	5306-182-2064	AN3H13A	88044	BOLT,MACHINE-STEEL,CADMIUM... PLATED,HEX HEAD,DRILLED HEAD,NO.10-32 NF,1-13/32 IN.LG,1 IN.GRIP LG	ABC	EA		*	*	*		*		
PA-OZ-Z	5306-206-4539	800399	18876	BOLT,MACHINE.....	ABC	EA		*	*	*		*		
PA-FZ-Z	5306-206-4910	AN174-6A	88044	BOLT,MACHINE-STEEL,CADMIUM... PLATED,HEX HEAD,CLOSE TOLERANCE,1/4 IN.-28 NF, 25/32 IN.LG,5/16 IN.GRIP LG	ABC	EA		*	*	*		*		
PA-OZ-Z	5306-206-4911	AN174H15A	88044	BOLT,MACHINE-STEEL,HEX..... HEAD,DRILLED HEAD,CLOSE TOLERANCE,1/4 IN.-28 NF, 1-21/32 IN.LG	ABC	EA		*	*	*		*		
PA-OZ-Z	5306-206-5745	AN4C3A	88044	BOLT,MACHINE-CRES,PASSIVATED. FINISH,HEX HEAD,1/4 IN.-28	ABC	EA		*	*	*		*		

(1) SMR CODE	(2) FEDERAL STOCK NUMBER	(3) DESCRIPTION REFERENCE NUMBER & MFR CODE		USABLE ON CODE	(4) UNIT OF MEAS	(5) QTY INC IN UNIT	(6) 30-DAY DS/GS MAINT ALW (a) 1-20	(b) 21-50	(c) 51-100	(7) 1-YR ALWPER 100 EQUIP CNTGCY	(8) DEPOT MAINT ALWPER 100 EQUIP	(9) ILLUSTRATION (a) FIG NO	(b) ITEM NO
		FUNCTIONAL GROUP - 60	BULK MATERIALS	CH-47									
			CONTINUED									BULK	
PA-OZ-Z	5306-206-5747	AN178H33	88044 BOLT,MACHINE-STEEL,HEX..... HEAD,DRILLED HEAD & SHANK, CLOSE TOLERANCE,1/2 IN.-20 NF,3-15/32 IN.LG	ABC	EA		*	*	*		*		
PA-FZ-Z	5306-207-1067	NAS464-4-35	80205 BOLT,SHEAR-STEEL,CADMIUM..... PLATED HEAD & THREAD, CORROSION PREVENTIVE COATED SHANK,HEX HEAD,DRILLED SHANK,CLOSE TOLERANCE,1/4 IN.-28 NF,2-17/32 IN.LG, 2-3/16 IN.GRIP LG	ABC	EA		*	*	*		*		
N PA-OZ-Z	5306-207-2345	NAS464P4A16	80205 BOLT,SHEAR-STEEL,HEX HEAD,.... 1/4 IN.-28 NF,11/32 IN.LG,1 IN.GRIP LG	ABC	EA		*	*	*		*		
PA-OZ-Z	5306-207-9786	AN6CH5	88044 BOLT,MACHINE-CRES,HEX HEAD,.. DRILLED HEAD & SHANK,3/8 IN.-24 NF,45/64 IN.LG	ABC	EA		*	*	*		*		
PA-OZ-Z	5306-207-9791	AN4H33A	88044 BOLT,MACHINE-STEEL,HEX..... HEAD,DRILLED HEAD,1/4 IN.-28 NF,3-13/32 IN.LG	ABC	EA		*	*	*		*		
PA-OZ-Z	5306-208-3646	AN8-11A	88044 BOLT,MACHINE-STEEL,HEX HEAD,. 1/2 IN.-20 NF,1-7/32 IN. LG,7/16 IN.GRIP LG	ABC	EA		*	*	*		*		
PA-OZ-Z	5306-208-3659	AN8-25A	88044 BOLT,MACHINE-STEEL,HEX HEAD,. 1/2 IN.-20 NF,2-23/32 IN. LG,1-15/16 IN.GRIP LG	ABC	EA		*	*	*		*		
PA-FZ-Z	5306-208-9036	AN6H14	88044 BOLT,MACHINE-STEEL,CADMIUM... PLATED,HEX HEAD,DRILLED HEAD & SHANK,3/8 IN.-24 NF, 1-37/64 IN.LG,15/16 IN.GRIP LG	ABC	EA		*	*	*		*		
PB-HZ-Z	5306-226-3915	NAS627-78	80205 BOLT,MACHINE-STEEL ALLOY,.... CADMIUM PLATED,DOUBLE HEX WASHER HEAD,EXTERNAL WRENCHING,7/16 IN.-20 NF, 5.569 IN.LG,4-7/8 IN.GRIP LG	ABC	EA		*	*	*		*		
XB-HZ-Z		NAS634-44	80205 BOLT,MACHINE-STEEL ALLOY,.... DOUBLE HEX WASHER HEAD, 7/8 IN.-14 NF,3.944 IN.LG	ABC	EA								
XB-HZ-Z		NAS627-76	80205 BOLT,MACHINE-STEEL ALLOY,.... CADMIUM PLATED,DOUBLE HEX WASHER HEAD,EXTERNAL WRENCHING,7/16 IN.-20 NF, 5.444 IN.LG,4-3/4 IN.GRIP LG	ABC	EA								
XB-OZ-Z		AN4CH62	88044 BOLT,MACHINE-CRES,HEX HEAD,..	ABC	EA								

(1) SMR CODE	(2) FEDERAL STOCK NUMBER	(3) DESCRIPTION REFERENCE NUMBER & MFR CODE			USABLE ON CODE CH-47	(4) UNIT OF MEAS	(5) QTY INC IN UNIT	(6) 30-DAY DS/GS MAINT ALW (a) 1-20	(b) 21-50	(c) 51-100	(7) 1-YR ALWPER 100 EQUIP CNTGCY	(8) DEPOT MAINT ALWPER 100 EQUIP	(9) ILLUSTRATION (a) FIG NO	(b) ITEM NO
		FUNCTIONAL GROUP - 60 BULK MATERIALS												
		CONTINUED DRILLED HEAD & SHANK,1/4 IN.-28 NF,6.281 IN.LG											BULK	
	PB-HZ-Z	5306-226-6617	NAS627-30	80205	BOLT,MACHINE-STEEL ALLOY,.... CADMIUM PLATED,DOUBLE HEX WASHER HEAD,EXTERNAL WRENCHING,7/16 IN.-20 NF, 2.569 IN.LG,1-7/8 IN.GRIP LG	ABC	EA		*	*	*		*		
C	PA-HZ-Z	5306-226-6618	NAS627-46	80205	BOLT,MACHINE-STEEL ALLOY,.... CADMIUM PLATED,DOUBLE HEX WASHER HEAD,EXTERNAL WRENCHING,7/16 IN.-20 NF, 3.569 IN.LG,2-7/8 IN.GRIP LG	ABC	EA		*	*	*		*		
	XB-HZ-Z		NAS627-72	80205	BOLT,MACHINE-STEEL ALLOY,.... CADMIUM PLATED,DOUBLE HEX WASHER HEAD,EXTERNAL WRENCHING,7/16 IN.-20 NF, 5.194 IN.LG,4-1/2 IN.GRIP LG	ABC	EA								
	PA-FZ-Z	5306-263-7798	AN46-17	88044	BOLT,EYE-STEEL,DRILLED..... SHANK,3/8 IN.-24 NF,1-61/64 IN.LG	ABC	EA		*	*	*		*		
	XB-FZ-Z		AN46-30	88044	BOLT,EYE-STEEL,3/8 IN.-24.... NF,2-7/16 IN.LG	ABC	EA								
	PB-FZ-Z	5306-267-9233	AN174H3	88044	BOLT,MACHINE-STEEL,HEX..... HEAD,DRILLED HEAD & SHANK, CLOSE TOLERANCE,1/4 IN.-28 NF,15/32 IN.LG	ABC	EA		*	*	*		*		
	PB-FZ-Z	5306-267-9234	AN178H47	88044	BOLT,MACHINE-STEEL,CADMIUM... PLATED,HEX HEAD,DRILLED HEAD & SHANK,CLOSE TOLERANCE,1/2 IN.-20 NF, 4-31/32 IN.LG,4-3/16 IN. GRIP LG	ABC	EA		*	*	*		*		
	XB-OZ-Z		AN43BC11A	88044	BOLT,EYE-CRES,1/4 IN.-28..... NF,1-5/32 IN.LG	ABC	EA								
	PB-OZ-Z	5306-269-2825	AN44C54	88044	BOLT,EYE-CRES,DRILLED..... SHANK,5/16 IN.-24 NF, 5-19/32 IN.LG	ABC	EA		*	*	*		*		
	XB-DZ-Z		NAS464P8L23	80205	BOLT,SHEAR-STEEL,HEX HEAD,... DRILLED SHANK,1/2 IN.-20 NF,1-29/32 IN.LG	ABC	EA								
	PB-DZ-Z	5306-269-2832	NAS464P8LA23	80205	BOLT,SHEAR-STEEL,CADMIUM..... PLATED,HEX HEAD,CLOSE TOLERANCE,1/2 IN.-20 NF, 1-29/32 IN.LG,1-7/16 IN. GRIP LG	ABC	EA						*		
	XB-OZ-Z		AN8CH35	88044	BOLT,MACHINE-CRES,HEX HEAD,..	ABC	EA								

(1) SMR CODE	(2) FEDERAL STOCK NUMBER	(3) DESCRIPTION REFERENCE NUMBER & MFR CODE			USABLE ON CODE	(4) UNIT OF MEAS	(5) QTY INC IN UNIT	(6) 30-DAY DS/GS MAINT ALW (a) 1-20	(b) 21-50	(c) 51-100	(7) 1-YR ALWPER 100 EQUIP CNTGCY	(8) DEPOT MAINT ALWPER 100 EQUIP	(9) ILLUSTRATION (a) FIG NO	(b) ITEM NO
		FUNCTIONAL GROUP - 60	BULK MATERIALS		CH-47									
				CONTINUED									BULK	
XB-OZ-Z		AN8DDH7	88044	DRILLED HEAD & SHANK,1/2 IN.-20 NF,3-23/32 IN.LG BOLT,MACHINE-ALUMINUM..... ALLOY,HEX HEAD,DRILLED HEAD & SHANK,1/2 IN.-20 NF, 31/32 IN.LG	ABC	EA								
PB-OZ-Z	5306-272-2143	AN47-27	88044	BOLT,EYE-STEEL,DRILLED SHANK. 7/16 IN.-20 NF,2-31/32 IN. LG,2-5/16 IN.GRIP LG,FOR 3/8 IN.DIA PIN	ABC	EA		*	*	*		*		
PA-OZ-Z	5306-275-9524	AN175H17	88044	BOLT,MACHINE-STEEL,HEX..... HEAD,DRILLED HEAD & SHANK, CLOSE TOLERANCE,5/16 IN.-24 NF,1-31/32 IN.LG	ABC	EA		*	*	*		*		
PA-OZ-Z	5306-275-9528	AN175H13	88044	BOLT,MACHINE-STEEL,HEX..... HEAD,DRILLED HEAD & SHANK, CLOSE TOLERANCE,5/16 IN.-24 NF,1-15/32 IN.LG	ABC	EA		*	*	*		*		
PA-OZ-Z	5306-275-9530	AN175H15	88044	BOLT,MACHINE-STEEL,HEX..... HEAD,DRILLED HEAD & SHANK, 5/16 IN.-24 NF,1-23/32 IN. LG	ABC	EA		*	*	*		*		
PA-FZ-Z	5306-275-9552	AN176-10A	88044	BOLT,MACHINE-STEEL,CADMIUM... PLATED,HEX HEAD,CLOSE TOLERANCE,3/8 IN.-24 NF, 1-5/64 IN.LG	ABC	EA		*	*	*		*		
PA-OZ-Z	5306-275-9558	AN178H20	88044	BOLT,MACHINE-STEEL,HEX..... HEAD,DRILLED HEAD & SHANK, 1/2 IN.-20 NF,2-3/32 IN.LG, CLOSE TOLERANCE	ABC	EA		*	*	*		*		
PA-OZ-Z	5306-275-9563	AN176H16	88044	BOLT,MACHINE-STEEL,HEX HEAD.. DRILLED HEAD & SHANK,CLOSE TOLERANCE,3/8 IN.-24 NF, 1-53/64 IN.LG	ABC	EA		*	*	*		*		
PA-OZ-Z	5306-275-9567	AN173H7	88044	BOLT,MACHINE-STEEL,HEX..... HEAD,DRILLED HEAD & SHANK, CLOSE TOLERANCE,NO.10-32 NF,29/32 IN.LG	ABC	EA		*	*	*		*		
PB-FZ-Z	5306-276-8328	MS20004H22	96906	BOLT,INTERNAL WRENCHING..... STEEL ALLOY,BEVEL HEAD, DRILLED HEAD,1/4 IN.-28 NF,1.875 IN.LG	ABC	EA		*	*	*		*		
PA-FZ-Z	5306-281-5588	AN104717	88044	BOLT,MACHINE-STEEL,HEX HEAD.. 0.562 IN.DIA,1.188 IN.LG	ABC	EA		*	*	*		*		
PA-FZ-Z	5306-281-8483	AN6H20	88044	BOLT,MACHINE-STEEL,CADMIUM... PLATED,HEX HEAD,DRILLED HEAD & SHANK,3/8 IN.-24 NF, 2-5/64 IN.LG,1-7/16 IN.GRIP LG	ABC	EA		*	*	*		*		
XB-FZ-Z		AN101348	88044	BOLT,MACHINE-STEEL,HEX.....	ABC	EA								

(1) SMR CODE	(2) FEDERAL STOCK NUMBER	(3) DESCRIPTION REFERENCE NUMBER & MFR CODE		USABLE ON CODE CH-47	(4) UNIT OF MEAS	(5) QTY INC IN UNIT	(6) 30-DAY DS/GS MAINT ALW (a) 1-20	(b) 21-50	(c) 51-100	(7) 1-YR ALWPER 100 EQUIP CNTGCY	(8) DEPOT MAINT ALWPER 100 EQUIP	(9) ILLUSTRATION (a) FIG NO	(b) ITEM NO
		FUNCTIONAL GROUP - 60 BULK MATERIALS											
		CONTINUED										BULK	
		HEAD,3/8 IN.-24 NF,5 IN.LG											
PA-OZ-Z	5306-282-2678	AN4H43A	88044	BOLT,MACHINE-STEEL,CADMIUM... PLATED,HEX HEAD,DRILLED HEAD,1/4 IN.-28 NF,4-13/32 IN.LG,3-15/16 IN.GRIP LG	ABC	EA		*	*	*		*		
XB-OZ-Z		AN22-23	88044	BOLT,CLEVIS-STEEL,CADMIUM.... PLATED,BUTTON HEAD,DRILLED SHANK,NO.8-36 NF,1-15/32 IN.LG,1-3/16 IN.GRIP LG	ABC	EA								
PA-OZ-Z	5306-282-4311	AN3H3	88044	BOLT,MACHINE-STEEL,CADMIUM... PLATED,HEX HEAD,DRILLED HEAD & SHANK,NO.10-32 NF, 15/32 IN.LG,1/16 IN.GRIP LG	ABC	EA		*	*	*		*		
PA-FZ-Z	5306-282-5518	NAS152ADH50	80205	BOLT,INTERNAL WRENCHING..... STEEL,HEX HEAD,DRILLED HEAD,3/4 IN.-16 NF,3-1/8 IN.LG	ABC	EA		*	*	*		*		
PA-FZ-Z	5306-283-0169	AN174-20	88044	BOLT,MACHINE-STEEL,CADMIUM... PLATED,HEX HEAD,DRILLED SHANK,CLOSE TOLERANCE,1/4 IN.-28 NF,2-1/32 IN.LG, 1-9/16 IN.GRIP LG	ABC	EA		*	*	*		*		
PA-OZ-Z	5306-283-0557	NAS464-4A49	80205	BOLT,SHEAR-STEEL,CADMIUM..... PLATED HEAD & THREAD, CORROSION PREVENTIVE COATED SHANK,HEX HEAD,CLOSE TOLERANCE,1/4 IN.-28 NF, 3-13/32 IN.LG,3-1/16 IN. GRIP LG	ABC	EA		*	*	*		*		
PA-OZ-Z	5306-285-2611	AN42-12	88044	BOLT,EYE-STEEL,DRILLED..... SHANK,NO.10-32 NF, 1-9/32 IN.LG	ABC	EA		*	*	*		*		
PA-FZ-Z	5306-285-5326	AN174H11A	88044	BOLT,MACHINE-STEEL,HEX..... HEAD,DRILLED HEAD,CLOSE TOLERANCE,1/4 IN.-28 NF, 1-5/32 IN.LG	ABC	EA		*	*	*		*		
PA-FZ-Z	5306-285-5502	AN101218	88044	BOLT,MACHINE-STEEL,HEX..... HEAD,5/16 IN.-24 NF,1-3/8 IN.LG	ABC	EA		*	*	*		*		
PA-FZ-Z	5306-285-7524	NAS464-3A12	80205	BOLT,SHEAR-STEEL,HEX HEAD.... CLOSE TOLERANCE,NO.10-32 NF,1-3/32 IN.LG	ABC	EA		*	*	*		*		
PA-FZ-Z	5306-285-7529	NAS464-3A9	80205	BOLT,SHEAR-STEEL,HEX HEAD.... CLOSE TOLERANCE,NO.10-32 NF 29/32 IN.LG	ABC	EA		*	*	*		*		
PA-FZ-Z	5306-286-0564	VS10107-1	77272	BOLT,EYE.....	ABC	EA		*	*	*		*		
PA-OZ-Z	5306-286-0836	AN8H21	88044	BOLT,MACHINE-STEEL,HEX..... HEAD,DRILLED HEAD & SHANK, 1/2 IN.-20 NF,2-7/32 IN.LG	ABC	EA		*	*	*		*		
PA-OZ-Z	5306-286-1349	NAS428-5-6	80205	BOLT,MACHINE-STEEL ALLOY.....	ABC	EA		*	*	*		*		

(1) SMR CODE	(2) FEDERAL STOCK NUMBER	(3) DESCRIPTION REFERENCE NUMBER & MFR CODE			USABLE ON CODE	(4) UNIT OF MEAS	(5) QTY INC IN UNIT	(6) 30-DAY DS/GS MAINT ALW (a) 1-20	(b) 21-50	(c) 51-100	(7) 1-YR ALWPER 100 EQUIP CNTGCY	(8) DEPOT MAINT ALWPER 100 EQUIP	(9) ILLUSTRATION (a) FIG NO	(b) ITEM NO
		FUNCTIONAL GROUP - 60	BULK MATERIALS		CH-47									
				CONTINUED										
PB-DZ-Z	5306-286-1459	NAS464-9-21	80205	5/16 IN.-24 NF,3/4 IN.LG BOLT,SHEAR-STEEL,CADMIUM..... PLATED HEAD & THREAD, CORROSION PREVENTIVE COATED SHANK,HEX HEAD,DRILLED SHANK,CLOSE TOLERANCE,9/16 IN.-18 NF,1-13/16 IN.LG, 1-5/16 IN.GRIP LG	ABC	EA						*	BULK	
PA-FZ-Z	5306-286-3300	NAS428H6-12	80205	BOLT,MACHINE-STEEL ALLOY,.... CROWNED HEX HEAD,DRILLED HEAD,3/8 IN.-24 NF, 1-1/4 IN.LG	ABC	EA		*	*	*		*		
PA-OZ-Z	5306-286-3319	NAS428H4-12	80205	BOLT,MACHINE-STEEL ALLOY,.... ADJUSTING CROWNED HEX HEAD, DRILLED HEAD,1/4 IN.-28 NF, 1-1/4 IN.LG	ABC	EA		*	*	*		*		
C PA-OZ-Z	5306-292-5872	AN174C12	88044	BOLT,MACHINE-CRES,HEX HEAD,.. DRILLED SHANK,CLOSE TOLERANCE,1/4 IN.-28 NF, 1-9/32 IN.LG	ABC	EA		*	*	*		*		
PA-FZ-Z	5306-292-6178	AN174-10A	88044	BOLT,MACHINE-STEEL,HEX HEAD,. CLOSE TOLERANCE,1/4 IN.-28 NF,1-1/32 IN.LG	ABC	EA		*	*	*		*		
PA-OZ-Z	5306-292-6180	AN174-11A	88044	BOLT,MACHINE-STEEL,CADMIUM... PLATED,HEX HEAD,CLOSE TOLERANCE,1/4 IN.-28 NF, 1-5/32 IN.LG,11/16 IN. GRIP LG	ABC	EA		*	*	*		*		
PB-DZ-Z	5306-292-6463	NAS464-6-18	80205	BOLT,SHEAR-STEEL,HEX HEAD,... DRILLED SHANK,3/8 IN.-24 NF,1-31/64 IN.LG	ABC	EA						*		
PA-OZ-Z	5306-292-8276	AN173H11A	88044	BOLT,MACHINE-STEEL,HEX..... HEAD,DRILLED HEAD,CLOSE TOLERANCE,NO.10-32 NF, 1-5/32 IN.LG	ABC	EA		*	*	*		*		
PA-OZ-Z	5306-292-8282	AN173H7A	88044	BOLT,MACHINE-STEEL,HEX..... HEAD,DRILLED HEAD,NO.10-32 NF,29/32 IN.LG	ABC	EA		*	*	*		*		
PA-OZ-Z	5306-292-8532	NAS464-6A41	80205	BOLT,SHEAR-STEEL,HEX HEAD,... 3/8 IN.-24 NF,2-59/64 IN.LG	ABC	EA		*	*	*		*		
PA-OZ-Z	5306-292-8541	NAS464P4A14	80205	BOLT,SHEAR-STEEL,HEX HEAD.... DRILLED SHANK,CLOSE TOLERANCE,1/4 IN.-28 NF, 1-7/32 IN.LG	ABC	EA		*	*	*		*		
PA-FZ-Z	5306-297-0042	AN103806	88044	BOLT,MACHINE-STEEL,HEX..... HEAD,DRILLED HEAD, 1/4 IN.-28 NF,1/2 IN.LG	ABC	EA		*	*	*		*		
PA-FZ-Z	5306-298-2815	AN174-16	88044	BOLT,MACHINE-STEEL,CADMIUM... PLATED,HEX HEAD,1/4 IN.-28	ABC	EA		*	*	*		*		

(1) SMR CODE	(2) FEDERAL STOCK NUMBER	(3) DESCRIPTION REFERENCE NUMBER & MFR CODE		USABLE ON CODE CH-47	(4) UNIT OF MEAS	(5) QTY INC IN UNIT	(6) 30-DAY DS/GS MAINT ALW (a) 1-20	(b) 21-50	(c) 51-100	(7) 1-YR ALWPER 100 EQUIP CNTGCY	(8) DEPOT MAINT ALWPER 100 EQUIP	(9) ILLUSTRATION (a) FIG NO	(b) ITEM NO
		FUNCTIONAL GROUP - 60 BULK MATERIALS											
			CONTINUED NF,1-25/32 LG,CLOSE TOLERANCE,1-5/16 IN.GRIP LG									BULK	
PA-OZ-Z	5306-429-0377	AN22-17A	88044 BOLT,CLEVIS-STEEL,BUTTON..... HEAD,NO.8-36 NF,1-3/32 IN. LG,13/16 IN.GRIP LG	ABC	EA		*	*	*		*		
PA-OZ-Z	5306-527-4532	AN174H33A	88044 BOLT,MACHINE-STEEL,HEX..... HEAD,CLOSE TOLERANCE,1/4 IN.-28 NF,3-33/64 IN.LG	ABC	EA		*	*	*		*		
PB-HZ-Z	5306-543-4625	NAS625-16	80205 BOLT,MACHINE-STEEL ALLOY,.... DOUBLE HEX WASHER HEAD,5/16 IN.-24 NF,1.572 IN.LG	ABC	EA		*	*	*		*		
PB-HZ-Z	5306-543-4626	NAS624-12	80205 BOLT,MACHINE-STEEL,DOUBLE.... HEX WASHER HEAD,1/4 IN.-28 NF,1-15/64 IN.LG	ABC	EA		*	*	*		*		
PB-HZ-Z	5306-543-4632	NAS625-18	80205 BOLT,MACHINE-STEEL,DOUBLE.... HEX WASHER HEAD,5/16 IN.-24 NF,1.697 IN.LG	ABC	EA		*	*	*		*		
XB-FZ-Z		AN176H53	88044 BOLT,MACHINE-STEEL,HEX..... HEAD,DRILLED HEAD & SHANK, CLOSE TOLERANCE,3/8 IN.-24 NF,5-29/64 IN.LG	ABC	EA								
PA-OZ-Z	5306-550-0703	AN3H34A	88044 BOLT,MACHINE-STEEL,CADMIUM... PLATED,HEX HEAD,DRILLED HEAD,NO.10-32 NF,3-17/32 IN.LG,3-1/8 IN.GRIP LG	ABC	EA		*	*	*		*		
PA-OZ-Z	5306-550-3408	AN174H13A	88044 BOLT,MACHINE-STEEL,HEX..... HEAD,DRILLED HEAD,1/4 IN.-28 NF,1-13/32 IN.LG	ABC	EA		*	*	*		*		
PB-HZ-Z	5306-551-6822	NAS464P9-14	80205 BOLT,SHEAR-STEEL,CADMIUM..... PLATED,HEX HEAD,DRILLED SHANK,CLOSE TOLERANCE,9/16 IN.-18 NF,1-3/8 IN.LG,7/8 IN.GRIP LG	ABC	EA		*	*	*		*		
PA-OZ-Z	5306-558-3649	NAS464P6-42	80205 BOLT,SHEAR-STEEL,CADMIUM..... PLATED,HEX HEAD,DRILLED SHANK,CLOSE TOLERANCE,3/8 IN.-24 NF,2-63/64 IN.LG	ABC	EA		*	*	*		*		
PA-FZ-Z	5306-558-5916	MS20004H30	96906 BOLT,INTERNAL WRENCHING..... STEEL ALLOY,BEVEL HEAD, DRILLED HEAD,1/4 IN.-28 NF,2.375 IN.LG	ABC	EA		*	*	*		*		
PA-OZ-Z	5306-558-9450	AN7H15	88044 BOLT,MACHINE-STEEL,CADMIUM... PLATED,HEX HEAD,DRILLED HEAD & SHANK,7/16 IN.-20 NF,1-23/32 IN.LG,1-1/16 IN. GRIP LG	ABC	EA		*	*	*		*		
PA-FZ-Z	5306-558-9455	AN4H47A	88044 BOLT,MACHINE-STEEL,CADMIUM... PLATED,HEX HEAD,DRILLED HEAD,1/4 IN.-28 NF,4-29/32	ABC	EA		*	*	*		*		

	(1) SMR CODE	(2) FEDERAL STOCK NUMBER	(3) DESCRIPTION REFERENCE NUMBER & MFR CODE		USABLE ON CODE	(4) UNIT OF MEAS	(5) QTY INC IN UNIT	(6) 30-DAY DS/GS MAINT ALW (a) 1-20	(b) 21-50	(c) 51-100	(7) 1YR ALWPER 100 EQUIP CNTGCY	(8) DEPOT MAINT ALWPER 100 EQUIP	(9) ILLUSTRATION (a) FIG NO	(b) ITEM NO
			FUNCTIONAL GROUP - 60 BULK MATERIALS		CH-47									
			CONTINUED										BULK	
	PA-OZ-Z	5306-576-1907	AN4H37A	88044	IN.LG,4-7/16 IN.GRIP LG BOLT,MACHINE-STEEL,CADMIUM... PLATED,HEX HEAD,DRILLED HEAD,1/4 IN.-28 NF,3-29/32 IN.LG,3-7/16 IN.GRIP LG	ABC	EA	*	*	*		*		
	PA-OZ-Z	5306-576-1938	AN4H34	88044	BOLT,MACHINE-STEEL,CADMIUM... PLATED,HEX HEAD,DRILLED HEAD & SHANK,1/4 IN.-28 NF, 3-17/32 IN.LG,3-1/16 IN GRIP LG	ABC	EA	*	*	*		*		
	PA-OZ-Z	5306-576-5909	NAS464P3A9	80205	BOLT,SHEAR-STEEL,CADMIUM..... PLATED,HEX HEAD,CLOSE TOLERANCE,NO.10-32 NF,29/32 IN.LG	ABC	EA	*	*	*		*		
	XB-FZ-Z		AN8CH16	88044	BOLT,MACHINE-CRES,HEX HEAD,.. DRILLED HEAD & SHANK,1/2 IN.-20 NF,1-27/32 IN.LG	ABC	EA							
	XB-OZ-Z		AN8CH14	88044	BOLT,MACHINE-STEEL,HEX..... HEAD,DRILLED HEAD & SHANK, 1/2 IN.-20 NF,1-19/32 IN.LG	ABC	EA							
	XB-OZ-Z		AN6CH16	88044	BOLT,MACHINE-CRES,HEX..... HEAD,DRILLED HEAD & SHANK, 3/8 IN.-24 NF,1-53/64 IN.LG	ABC	EA							
C	PA-OZ-Z	5306-582-6987	AN10H23	88044	BOLT,MACHINE-STEEL,HEX..... HEAD,DRILLED HEAD & SHANK, 5/8 IN.-18 NF,2-33/64 IN.LG	ABC	EA	*	*	*		*		
C	XB-OZ-Z		AN9H7	88044	BOLT,MACHINE-STEEL,HEX..... HEAD,DRILLED HEAD & SHANK, 9/16 IN.-18 NF,1-1/32 IN.LG	ABC	EA							
	PA-OZ-Z	5306-582-8849	AN6H23	88044	BOLT,MACHINE-STEEL,CADMIUM... PLATED,HEX HEAD,DRILLED HEAD & SHANK,3/8 IN.-24 NF, 2-29/64 IN.LG,1-13/16 IN. GRIP LG	ABC	EA	*	*	*		*		
	PA-OZ-Z	5306-582-8935	AN173H44A	88044	BOLT,MACHINE-STEEL,HEX..... HEAD,DRILLED HEAD,NO.10-32 NF,4-17/32 IN.LG	ABC	EA	*	*	*		*		
	PA-OZ-Z	5306-582-9588	AN6C13A	88044	BOLT,MACHINE-CRES,HEX HEAD,.. 3/8 IN.-24 NF,1-29/64 IN.LG	ABC	EA	*	*	*		*		
	XB-OZ-Z		AN4CH31A	88044	BOLT,MACHINE-STEEL,HEX HEAD,. DRILLED HEAD & SHANK,1/4 IN.-28 NF,3-5/32 IN.LG	ABC	EA							
	PA-OZ-Z	5306-584-5034	AN176-24A	88044	BOLT,MACHINE-STEEL,CADMIUM... PLATED,HEX HEAD,CLOSE TOLERANCE,3/8 IN.-24 NF, 2-37/64 IN.LG,1-15/16 IN.GRIP LG	ABC	EA	*	*	*		*		
	XB-OZ-Z		AN6CH37	88044	BOLT,MACHINE-STEEL,HEX..... HEAD,DRILLED HEAD & SHANK,	ABC	EA							

(1) SMR CODE	(2) FEDERAL STOCK NUMBER	(3) DESCRIPTION REFERENCE NUMBER & MFR CODE		USABLE ON CODE CH-47	(4) UNIT OF MEAS	(5) QTY INC IN UNIT	(6) 30-DAY DS/GS MAINT ALW (a) 1-20	(b) 21-50	(c) 51-100	(7) 1-YR ALWPER 100 EQUIP CNTGCY	(8) DEPOT MAINT ALWPER 100 EQUIP	(9) ILLUSTRATION (a) FIG NO	(b) ITEM NO
		FUNCTIONAL GROUP - 60 BULK MATERIALS										BULK	
		CONTINUED 3/8 IN.-24 NF,3-61/64 IN.LG											
XB-FZ-Z		AN173-44A	88044	BOLT,MACHINE-STEEL,HEX HEAD,.. CLOSE TOLERANCE,NO.10-32 NF,4-17/32 IN.LG	ABC	EA							
PA-FZ-Z	5306-584-6715	AN175-67	88044	BOLT,MACHINE-STEEL,CADMIUM... PLATED,HEX HEAD,DRILLED SHANK,CLOSE TOLERANCE,5/16 IN.-24 NF,6-31/32 IN.LG, 6-7/16 IN.GRIP LG	ABC	EA	*	*	*		*		
PA-FZ-Z	5306-584-7568	NAS464P6A9	80205	BOLT,SHEAR-STEEL,CADMIUM..... PLATED,HEX HEAD,CLOSE TOLERANCE,3/8 IN.-24 NF, 59/64 IN.LG,9/16 IN.GRIP LG	ABC	EA	*	*	*		*		
XB-FZ-Z		AN101320	88044	BOLT,MACHINE-STEEL,HEX..... HEAD,3/8 IN.-24 NF,1-5/8 IN.LG	ABC	EA							
XB-OZ-Z		NAS464-6A42	80205	BOLT,SHEAR-STEEL,CADMIUM..... PLATED HEAD & THREAD, CORROSION PREVENTIVE COATED SHANK,HEX HEAD,CLOSE TOLERANCE,3/8 IN.-24 NF, 2-63/64 IN.LG,2-5/8 IN.GRIP LG	ABC	EA							
PA-FZ-Z	5306-619-1807	AN104011	88044	BOLT,MACHINE-STEEL,HEX..... HEAD,DRILLED HEAD, 3/8 IN.-24 NF,0.938 IN.LG	ABC	EA	*	*	*		*		
PA-OZ-Z	5306-630-2089	AN177H34	88044	BOLT,MACHINE-STEEL,CADMIUM... PLATED,HEX HEAD,DRILLED HEAD & SHANK,CLOSE TOLERANCE,7/16 IN.-20 NF, 3-19/32 IN.LG,2-15/16 IN. GRIP LG	ABC	EA	*	*	*		*		
PA-OZ-Z	5306-637-8591	AN6H7	88044	BOLT,MACHINE-STEEL,HEX HEAD,.. DRILLED HEAD AND SHANK,3/8 IN.-24 NF,61/64 IN.LG	ABC	EA	*	*	*		*		
PA-OZ-Z	5306-638-2216	AN4284	88044	BOLT,EYE-STEEL,DRILLED SHANK. NO.10-32 NF,17/32 IN.LG,1/8 IN.GRIP LG,FOR 3/16 IN.DIA PIN	ABC	EA	*	*	*		*		
PA-FZ-Z	5306-638-4656	NAS464P6A12	80205	BOLT,MACHINE-STEEL,CADMIUM... PLATED,HEX HEAD,CLOSE TOLERANCE,3/8 IN.-24 NF, 1-7/64 IN.LG,3/4 IN.GRIP LG	ABC	EA	*	*	*		*		
PA-OZ-Z	5306-638-4834	AN6H11	88044	BOLT,MACHINE-STEEL,HEX HEAD.. DRILLED HEAD & SHANK,3/8 IN.-24 NC,1-13/64 IN.LG, 9/16 IN.GRIP LG	ABC	EA	*	*	*		*		
PA-OZ-Z	5306-638-5303	AN6H15	88044	BOLT,MACHINE-STEEL,CADMIUM... PLATED,HEX HEAD,DRILLED	ABC	EA	*	*	*		*		

(1) SMR CODE	(2) FEDERAL STOCK NUMBER	(3) DESCRIPTION REFERENCE NUMBER & MFR CODE		USABLE ON CODE	(4) UNIT OF MEAS	(5) QTY INC IN UNIT	(6) 30-DAY DS/GS MAINT ALW (a) 1-20	(b) 21-50	(c) 51-100	(7) 1-YR ALWPER 100 EQUIP IN SVCY	(8) DEPOT MAINT ALWPER 100 EQUIP	(9) ILLUSTRATION (a) FIG NO	(b) ITEM NO
		FUNCTIONAL GROUP - 60 BULK MATERIALS		CH-47									
			CONTINUED HEAD & SHANK,3/8 IN.-24 NF, 1-45/64 IN.LG,1-1/16 IN. GRIP LG									BULK	
PA-OZ-Z	5306-638-5794	AN174H23A	88044 BOLT,MACHINE-STEEL,CADMIUM... PLATED,HEX HEAD,DRILLED HEAD,CLOSE TOLERANCE,1/4 IN.-28 NF 2-13/32 IN.LG, 1-15/16 IN.GRIP LG	ABC	EA		*	*	*		*		
PA-OZ-Z	5306-638-5809	AN4H31A	88044 BOLT,MACHINE-STEEL,HEX HEAD,.. DRILLED HEAD,1/4 IN.-28 NF,3-5/32 IN.LG	ABC	EA		*	*	*		*		
PA-FZ-Z	5306-638-5832	AN6H14A	88044 BOLT,MACHINE-STEEL,HEX HEAD.. DRILLED HEAD & SHANK,3/8 IN.-24 NF,1-37/64 IN.LG	ABC	EA		*	*	*		*		
PA-OZ-Z	5306-638-7511	AN6H5	88044 BOLT,MACHINE-STEEL,CADMIUM... PLATED,HEX HEAD,DRILLED HEAD & SHANK,3/8 IN.-24 NF, 45/64 IN.LG,1/16 IN.GRIP LG	ABC	EA		*	*	*		*		
PA-OZ-Z	5306-639-1738	MS20005-19	96906 BOLT,INTERNAL WRENCHING-STEEL CADMIUM-PLATED,BEVEL HEAD, RECESSED HEAD,5/16 IN.-24 NF,1.750 IN.LG	ABC	EA		*	*	*		*		
PA-OZ-Z	5306-639-1851	AN8H17	88044 BOLT,MACHINE-STEEL,HEX..... HEAD,DRILLED HEAD & SHANK, 1/2 IN.-20 NF,1-31/32 IN.LG	ABC	EA		*	*	*		*		
PA-OZ-Z	5306-639-2314	NAS464P5A26	80205 BOLT,SHEAR-STEEL,CADMIUM..... PLATED,HEX HEAD,CLOSE TOLERANCE,5/16 IN.-24 NF, 1-63/64 IN.LG,1-5/8 IN.GRIP LG	ABC	EA		*	*	*		*		
PB-FZ-Z	5306-639-2332	NAS464-9-29	80205 BOLT,SHEAR-STEEL,CADMIUM..... PLATED HEAD & THREAD, CORROSION PREVENTIVE COATED SHANK,HEX HEAD,DRILLED SHANK,CLOSE TOLERANCE,9/16 IN.-18 NF,2-5/16 IN.LG, 1-13/16 IN.GRIP LG	ABC	EA		*	*	*		*		
PB-FZ-Z	5306-639-2384	AN177H54	88044 BOLT,MACHINE-STEEL,CADMIUM... PLATED,HEX HEAD,DRILLED HEAD & SHANNK,CLOSE TOLERANCE,7/16 IN.-20 NF, 5-19/32 IN.LG,4-15/16 IN. GRIP LG	ABC	EA		*	*	*		*		
PA-OZ-Z	5306-639-2437	AN8H22	88044 BOLT,MACHINE-STEEL,HEX..... HEAD,DRILLED HEAD & SHANK, 1/2 IN.-20 NF,2-11/32 IN.LG	ABC	EA		*	*	*		*		
PA-FZ-Z	5306-639-2474	AN8H6A	88044 BOLT,MACHINE-STEEL,CADMIUM... PLATED,HEX HEAD,DRILLED HEAD,1/2 IN.-20 NF,27/32	ABC	EA		*	*	*		*		

(1) SMR CODE	(2) FEDERAL STOCK NUMBER	(3) DESCRIPTION REFERENCE NUMBER & MFR CODE		USABLE ON CODE	(4) UNIT OF MEAS	(5) QTY INC IN UNIT	(6) 30-DAY DS/GS MAINT ALW (a) 1-20	(b) 21-50	(c) 51-100	(7) 1-YR ALWPER 100 EQUIP CNTGCY	(8) DEPOT MAINT ALWPER 100 EQUIP	(9) ILLUSTRATION (a) FIG NO	(b) ITEM NO
		FUNCTIONAL GROUP - 60	BULK MATERIALS	CH-47								BULK	
			CONTINUED										
			IN.LG,1/16 IN.GRIP LG										
PA-OZ-Z	5306-639-2515	NAS464-9-15	80205 BOLT,SHEAR-STEEL,CADMIUM..... PLATED HEAD & THREAD, CORROSION PREVENTIVE COATED SHANK,HEX HEAD,DRILLED SHANK,CLOSE TOLERANCE,9/16 IN.-18 NF,1-7/16 IN.LG, 15/16 IN.GRIP LG	ABC	EA		*	*	*		*		
PB-OZ-Z	5306-660-2378	AN42BC5	88044 BOLT,EYE-CRES,DRILLED SHANK,.. NO.10-32 NF,21/32 IN.LG,1/4 IN.GRIP LG,FOR 3/16 IN.DIA PIN	ABC	EA		*	*	*		*		
PA-OZ-Z	5306-685-2636	AN3-12	88044 BOLT,MACHINE-STEEL,CADMIUM... PLATED,HEX HEAD,DRILLED SHANK,NO.10-32 NF,1-9/32 IN.LG,7/8 IN.GRIP LG	ABC	EA		*	*	*		*		
PA-OZ-Z	5306-687-6139	MS9089-12	96906 BOLT,MACHINE-STEEL,CADMIUM... PLATED,DOUBLE HEX EXTENDED WASHER HEAD,DRILLED HEAD, 1/4 IN.-28 NF,7/8 IN.LG,1/8 IN.GRIP LG	ABC	EA		*	*	*		*		
PA-FZ-Z	5306-687-7570	MS9147-26	96906 BOLT,MACHINE-STEEL,CADMIUM... PLATED,DOUBLE HEX EXTENDED WASHER HEAD,1/4 IN.-28 NF, 1-3/4 IN.LG,1.00 IN.GRIP LG	ABC	EA		*	*	*		*		
PB-HZ-Z	5306-687-7710	NAS627-26	80205 BOLT,MACHINE-STEEL ALLOY..... CADMIUM PLATED,DOUBLE HEX WASHER HEAD,EXTERNAL WRENCHING,7/16 IN.-20 NF, 2.319 IN.LG,1-5/8 IN.GRIP LG	ABC	EA		*	*	*		*		
PB-HZ-Z	5306-687-7711	NAS628-32	80205 BOLT,MACHINE-STEEL,ALLOY..... CADMIUM PLATED,DOUBLE HEX WASHER HEAD,EXTERNAL WRENCHING,1/2 IN.-20 NF, 2.741 IN.LG,2 IN.GRIP LG	ABC	EA		*	*	*		*		
PB-HZ-Z	5306-688-1961	NAS625-22	80205 BOLT,MACHINE-STEEL ALLOY..... CADMIUM PLATED,DOUBLE HEX WASHER HEAD,EXTERNAL WRENCHING,5/16 IN.-24 NF, 1.947 IN.LG,1-3/8 IN.GRIP LG	ABC	EA		*	*	*		*		
PA-FZ-Z	5306-701-0332	BACB30CG6-3	81205 PIN,RIVET.....	ABC	EA		*	*	*		*		
PB-HZ-Z	5306-721-7527	NAS627-52	80205 BOLT,MACHINE-STEEL ALLOY..... CADMIUM PLATED,DOUBLE HEX.. WASHER HEAD,EXTERNAL WRENCHING,7/16 IN.-20 NF, 3.944 IN.LG,3-1/4 IN.GRIP LG	ABC	EA		*	*	*		*		
PB-FZ-Z	5306-725-3079	MS9147-12	96906 BOLT,MACHINE-STEEL,CADMIUM...	ABC	EA		*	*	*		*		

(1) SMR CODE	(2) FEDERAL STOCK NUMBER	(3) DESCRIPTION REFERENCE NUMBER & MFR CODE			USABLE ON CODE	(4) UNIT OF MEAS	(5) QTY INC IN UNIT	(6) 30-DAY DS/GS MAINT ALW (a) 1-20	(b) 21-50	(c) 51-100	(7) 1YR ALWPER 100 EQUIP CNTGCY	(8) DEPOT MAINT ALWPER 100 EQUIP	(9) ILLUSTRATION (a) FIG NO	(b) ITEM NO
		FUNCTIONAL GROUP - 60	BULK MATERIALS		CH-47									
				CONTINUED									BULK	
PB-HZ-Z	5306-726-9154	NAS628-26	80205	PLATED,DOUBLE HEX EXTENDED WASHER HEAD,1/4 IN.-28 NF, 7/8 IN.LG,1/8 IN.GRIP LG BOLT,MACHINE-STEEL ALLOY,.... CADMIUM PLATED,DOUBLE HEX WASHER HEAD,EXTERNAL WRENCHING,1/2 IN.-20 NF, 2.366 IN.LG,1-5/8 IN.GRIP LG	ABC	EA		*	*	*		*		
PB-HZ-Z	5306-727-0033	NAS627-24	80205	BOLT,MACHINE-STEEL ALLOY,.... CADMIUM PLATED,DOUBLE HEX WASHER HEAD,EXTERNAL WRENCHING,7/16 IN.-20 NF, 2.194 IN.LG,1-1/2 IN.GRIP LG	ABC	EA		*	*	*		*		
PB-HZ-Z	5306-727-2120	NAS629-32	80205	BOLT,MACHINE-STEEL ALLOY..... CADMIUM PLATED,DOUBLE HEX WASHER HEAD,EXTERNAL WRENCHING,9/16 IN.-18 NF, 2.826 IN.LG,2 IN.GRIP LG	ABC	EA		*	*	*		*		
PB-HZ-Z	5306-754-1763	NAS624-15	80205	BOLT,MACHINE-STEEL ALLOY,.... DOUBLE HEX WASHER HEAD,1/4 IN.-28 NF,0.937 IN.LG	ABC	EA		*	*	*		*		
PA-FZ-Z	5306-754-1791	MS20073-03-05	96906	BOLT,MACHINE-STEEL,HEX HEAD.. DRILLED HEAD,NO.10-32 NF, 21/32 IN.LG,1/8 IN.GRIP LG	ABC	EA		*	*	*		*		
PA-FZ-Z	5306-754-3049	MS20073-03-04	96906	BOLT,MACHINE-STEEL,CADMIUM... PLATED,HEX HEAD,DRILLED HEAD,NO.10-32 NF,0.594 IN. LG,0.062 IN.GRIP LG	ABC	EA		*	*	*		*		
XB-FZ-Z		AN173CH13	88044	BOLT,MACHINE-CRES,HEX HEAD,.. DRILLED HEAD & SHANK,NO. 10-32 NF,1-13/32 IN.LG	ABC	EA								
PA-FZ-Z	5306-781-5645	MS20074-05-15	96906	BOLT,MACHINE-STEEL,CADMIUM... PLATED,HEX HEAD,DRILLED HEAD,5/16 IN.-18 NC,1.672 IN.LG,1-1/8 IN.GRIP LG	ABC	EA		*	*	*		*		
PB-HZ-Z	5306-803-7375	NAS630-32	80205	BOLT,MACHINE-STEEL,DOUBLE.... HEX WASHER HEAD,5/8 IN.-18 NF,2.873 IN.LG	ABC	EA		*	*	*		*		
PB-HZ-Z	5306-805-3573	NAS628-20	80205	BOLT,MACHINE-STEEL ALLOY..... CADMIUM PLATED,DOUBLE HEX WASHER HEAD,EXTERNAL WRENCHING,1/2 IN.-20 NF, 1.991 IN.LG,1-1/4 IN.GRIP LG	ABC	EA		*	*	*		*		
C PA-HZ-Z	5306-807-2952	NAS1304-15	80205	BOLT,SHEAR-STEEL ALLOY,..... HEX,HEAD,CLOSE TOLERANCE, 1/4 IN.-28 NF,1.363 IN.LG	ABC	EA		*	*	*		*		
PA-DZ-Z	5306-808-1221	MS9089-07	96906	BOLT,MACHINE-STEEL,CADMIUM...	ABC	EA						*		

(1) SMR CODE	(2) FEDERAL STOCK NUMBER	(3) DESCRIPTION REFERENCE NUMBER & MFR CODE		USABLE ON CODE CH-47	(4) UNIT OF MEAS	(5) QTY INC IN UNIT	(6) 30-DAY DS/GS MAINT ALW (a) 1-20	(b) 21-50	(c) 51-100	(7) 1-YR ALWPER 100 EQUIP CNTGCY	(8) DEPOT MAINT ALWPER 100 EQUIP	(9) ILLUSTRATION (a) FIG NO	(b) ITEM NO
		FUNCTIONAL GROUP - 60	BULK MATERIALS										
			CONTINUED PLATED,DOUBLE HEX EXTENDED WASHER HEAD,DRILLED HEAD, 1/4 IN.-28 NF,9/16 IN.LG									BULK	
PA-FZ-Z	5306-808-2857	AN174C21A	88044 BOLT,MACHINE-CRES,PASSIVATED. FINISH,HEX HEAD,CLOSE TOLERANCE,1/4 IN.-28 NF, 2-5/32 IN.LG,1-11/16 IN. GRIP LG	ABC	EA		*	*	*		*		
PB-HZ-Z	5306-809-7406	NAS625-24	80205 BOLT,MACHINE-STEEL ALLOY,.... CADMIUM PLATED,DOUBLE HEX WASHER HEAD,EXTERNAL WRENCHING,5/16 IN.-24 NF, 2.072 IN.LG,1-1/2 IN.GRIP LG	ABC	EA		*	*	*		*		
PB-HZ-Z	5306-813-8090	NAS626-22	80205 BOLT,MACHINE-STEEL ALLOY..... CADMIUM PLATED,DOUBLE HEX WASHER HEAD,EXTERNAL WRENCHING,3/8 IN.-24 NF 1.994 IN.LG,1-3/8 IN.GRIP LG	ABC	EA		*	*	*		*		
PA-OZ-Z	5306-814-5533	AN174CH12A	88044 BOLT,MACHINE-CRES,PASSIVATED FINISH,HEX HEAD,DRILLED HEAD,CLOSE TOLERANCE,1/4 IN.-28 NF,1-9/32 IN.LG, 13/16 IN.GRIP LG	ABC	EA		*	*	*		*		
PA-FZ-Z	5306-814-9939	MS9091-13	96906 BOLT,MACHINE-STEEL,DOUBLE.... HEX EXTENDED WASHER HEAD, DRILLED HD,3/8 IN.-24 NF, 1.188 IN.LG	ABC	EA		*	*	*		*		
PB-HZ-Z	5306-816-0942	NAS627-38	80205 BOLT,MACHINE-STEEL ALLOY,.... CADMIUM PLATED,DOUBLE HEX WASHER HEAD,EXTERNAL WRENCHING,7/16 IN.-20 NF, 3.069 IN.LG,2-3/8 IN.GRIP LG	ABC	EA		*	*	*		*		
PB-HZ-Z	5306-816-3684	NAS628-28	80205 BOLT,MACHINE-STEEL ALLOY,.... CADMIUM PLATED,DOUBLE HEX WASHER HEAD,EXTERNAL WRENCHING,1/2 IN.-20 NF, 2.491 IN.LG,1-3/4 IN.GRIP LG	ABC	EA		*	*	*		*		
PA-OZ-Z	5306-818-3079	NAS464P8-17	80205 BOLT,SHEAR-STEEL,CADMIUM..... PLATED,HEX HEAD,DRILLED SHANK,CLOSE TOLERANCE,1/2 IN.-20 NF,1-31/64 IN.LG, 1-1/16 IN.GRIP LG	ABC	EA		*	*	*		*		
PB-HZ-Z	5306-822-2024	NAS630-36	80205 BOLT,MACHINE-STEEL ALLOY,.... CADMIUM PLATED,DOUBLE HEX WASHER HEAD,EXTERNAL	ABC	EA		*	*	*		*		

(1) SMR CODE	(2) FEDERAL STOCK NUMBER	(3) DESCRIPTION REFERENCE NUMBER & MFR CODE		USABLE ON CODE	(4) UNIT OF MEAS	(5) QTY INC IN UNIT	(6) 30-DAY DS/GS MAINT ALW (a) 1-20	(b) 21-50	(c) 51-100	(7) 1 YR ALWPER IN EQUIP CNTGCY	(8) DEPOT MAINT ALWPER IN EQUIP	(9) ILLUSTRATION (a) FIG NO	(b) ITEM NO
		FUNCTIONAL GROUP - 60 BULK MATERIALS		CH-47									
		CONTINUED WRENCHING,5/8 IN.-18 NF, 3.123 IN.LG,2-1/4 IN.GRIP LG										BULK	
XB-FZ-Z		AN175CH17	88044	BOLT,MACHINE-CRES,PASSIVATED. FINISH,HEX HEAD,DRILLED HEAD & SHANK,CLOSE TOLERANCE,5/16 IN.-24 NF, 1-31/32 IN.LG,1-7/16 IN. GRIP LG	ABC	EA							
PA-FZ-Z	5306-851-5166	NAS627-48	80205	BOLT,MACHINE-STEEL ALLOY,.... CADMIUM PLATED,DOUBLE HEX WASHER HEAD,EXTERNAL WRENCHING,7/16 IN.-20 NF, 3.694 IN.LG,3 IN.GRIP LG	ABC	EA	*	*	*		*		
PA-FZ-Z	5306-855-1172	NAS428-5-30	80205	BOLT,MACHINE-STEEL ALLOY,.... CROWNED HEX HEAD,5/16 IN.-24 NF,3 IN.LG	ABC	EA	*	*	*		*		
PA-FZ-Z	5306-869-4269	NAS1308-36DHW	80205	BOLT,SHEAR-ALLOY STEEL,HEX... HEAD,DRILLED SHANK,CLOSE TOLERANCE,1/2 IN.-20 NF, 2.985 IN.LG 2.985 IN.LG,2-1/4 IN.GRIP LG	ABC	EA	*	*	*		*		
PA-FZ-Z	5306-893-6009	MS9147-27	96906	BOLT,MACHINE-STEEL,CADMIUM... PLATED,DOUBLE HEX EXTENDED WASHER HEAD,1/4 IN.-28 NF, 1-7/8 IN.LG,1-1/8 IN.GRIP LG	ABC	EA	*	*	*		*		
PA-FZ-Z	5306-893-9848	MS9147-36	96906	BOLT,MACHINE-STEEL,CADMIUM... PLATED,DOUBLE HEX EXTENDED WASHER HEAD,1/4 IN.-28 NF, 3 IN.LG,2-1/4 IN.GRIP LG	ABC	EA	*	*	*		*		
PA-FZ-Z	5306-893-9850	MS9147-28	96906	BOLT,MACHINE-STEEL,CADMIUM... PLATED,DOUBLE HEX EXTENDED WASHER HEAD,1/4 IN.-28 NF, 2 IN.LG,1-1/4 IN.GRIP LG	ABC	EA	*	*	*		*		
C XB-FZ-Z		NAS628-44	80205	BOLT,MACHINE-STEEL ALLOY,.... CADMIUM PLATED,DOUBLE HEX WASHER HEAD,EXTERNAL WRENCHING,1/2 IN.-20 NF, 3.491 IN.LG,2-3/4 IN.GRIP LG	ABC	EA							
PA-FZ-Z	5306-926-5602	NAS1305-85D	80205	BOLT,SHEAR ALLOY STEEL,..... DRILLED SHANK,CLOSE TOLERANCE,5/16 IN.-24 NF, 5.312 IN.GRIP LG	ABC	EA	*	*	*		*		
XB-FZ-Z		AN182C31	88044	BOLT,MACHINE-CRES,HEX HEAD,.. DRILLED SHANK,CLOSE TOLERANCE,3/4 IN.-16 NF,	ABC	EA							

(1) SMR CODE	(2) FEDERAL STOCK NUMBER	(3) DESCRIPTION REFERENCE NUMBER & MFR CODE		USABLE ON CODE CH-47	(4) UNIT OF MEAS	(5) QTY INC IN UNIT	(6) 30-DAY DS/GS MAINT ALW (a) 1-20	(b) 21-50	(c) 51-100	(7) 1-YR ALWPER 100 EQUIP CNTGCY	(8) DEPOT MAINT ALWPER 100 EQUIP	(9) ILLUSTRATION (a) FIG NO	(b) ITEM NO
		FUNCTIONAL GROUP - 60 BULK MATERIALS											
		CONTINUED										BULK	
		3-9/32 IN.LG											
PA-OZ-Z	5306-944-1048	NAS428K6-30	80205	BOLT,MACHINE-STEEL ALLOY,.... CROWNED HEX HEAD,SLOTTED SHANK,3/8 IN.-24 NF,3 IN.LG	ABC	EA		*	*	*		*		
PA-OZ-Z	5306-946-0217	NAS1224-15L	80205	BOLT,SELF-LOCKING-STEEL..... ALLOY,HEX HEAD,CLOSE TOLERANCE,STRIP TYPE ELEMENT,1/4 IN.-28 NF, 0.938 IN.LG	ABC	EA		*	*	*		*		
PA-OZ-Z	5306-946-4875	NAS1223-7	80205	BOLT,SELF-LOCKING-STEEL..... ALLOY,HEX HEAD,CLOSE TOLERANCE,NO.10-32 NF, 0.438 IN.LG	ABC	EA		*	*	*		*		
PB-HZ-Z	5306-950-0125	NAS634-48	80205	BOLT,MACHINE-STEEL ALLOY..... CADMIUM PLATED,DOUBLE HEX WASHER HEAD,EXTERNAL WRENCHING,7/8 IN.-14 NF, 4.194 IN.LG,3 IN.GRIP LG	ABC	EA		*	*	*		*		
PB-FZ-Z	5306-951-0776	MS9089-14	96906	BOLT,MACHINE-STEEL,DOUBLE.... HEX HEAD,DRILLED HEAD,1/4 IN.-28 NF,1 IN.LG	ABC	EA		*	*	*		*		
XB-OZ-Z		NAS1224-8L	80205	BOLT,SELF-LOCKING-STEEL..... ALLOY,HEX HEAD,CLOSE TOLERANCE,STRIP TYPE ELEMENT,1/4 IN.-28 NF, 0.500 IN.LG	ABC	EA								
PA-OZ-Z	5306-957-2295	AN174H70	88044	BOLT,MACHINE-STEEL,HEX..... HEAD,DRILLED HEAD & SHANK, CLOSE TOLERANCE,1/4 IN.-28 NF,7-1/32 IN.LG	ABC	EA		*	*	*		*		
PA-FZ-Z	5306-975-2213	AN178C25A	88044	BOLT,MACHINE-CRES,PASSIVATED. FINISH,HEX HEAD,CLOSE TOLERANCE,1/2 IN.-20 NF, 2-23/32 IN.LG,1-15/16 IN. GRIP LG	ABC	EA		*	*	*		*		
XB-DZ-Z		NAS464-9-16	80205	BOLT,SHEAR-STEEL,CADMIUM..... PLATED HEAD & THREAD CORROSION PREVENTIVE COATED SHANK,HEX HEAD,DRILLED SHANK,CLOSE TOLERANCE,9/16 IN.-18 NF,1-1/2 IN.LG,1 IN. GRIP LG	ABC	EA								
PA-FZ-Z	5306-993-0500	MS20073-04-03	96906	BOLT,MACHINE-STEEL,CADMIUM... PLATED,HEX HEAD,DRILLED HEAD,1/4 IN.-28 NF,0.469 IN.LG,0.062 IN.GRIP LG	ABC	EA		*	*	*		*		
PA-FZ-Z	5307-285-3922	AN150521	88044	STUD,STEPPED-STEEL,CADMIUM... PLATED,1/4 IN.-20 NS ONE END,NO.10-32 NF OTHER END,	ABC	EA		*	*	*		*		

(1) SMR CODE	(2) FEDERAL STOCK NUMBER	(3) DESCRIPTION REFERENCE NUMBER & MFR CODE			USABLE ON CODE CH-47	(4) UNIT OF MEAS	(5) QTY INC IN UNIT	(6) 30-DAY DS/GS MAINT ALW (a) 1-20	(b) 21-50	(c) 51-100	(7) 1 YR ALWPER 100 EQUIP CNTGCY	(8) DEPOT MAINT ALWPER 100 EQUIP	(9) ILLUSTRATION (a) FIG NO	(b) ITEM NO
		FUNCTIONAL GROUP - 60	BULK MATERIALS											
				CONTINUED 0.174 IN.DIA OF UNTHREADED PORTION,0.875 IN.LG,0.003 IN.OVERSIZE									BULK	
PA-HZ-Z	5307-885-1411	KNHS428S11	98004	STUD.....	ABC	EA		*	*	*		*		
PA-DZ-Z	5307-936-9675	SF91-10SA7A	78286	STUD,LOCKEN.....	ABC	EA						*		
PA-FZ-Z	5310-012-3959	BACN10MS3-10	81205	NUT,SPACER,PLATE.....	ABC	EA		*	*	*		*		
PA-FZ-Z	5310-021-2764	BACN10FC5A4	81205	NUT,SELF-LOCKING,PLATE-STEEL, CADMIUM PLATED W/FLOATING NUT,1/4 IN.-28 NF,0.454 IN. W,1.252 IN.LG,0.399 IN.H, 2 MTG HOLES,0.098 IN.DIA	ABC	EA		*	*	*		*		
PA-FZ-Z	5310-021-7088	NAS1330A3KB116	80205	NUT,BLIND RIVET-ALUMINUM..... ALLOY,ANODIZED,FLAT COUNTERSUNK HEAD,KEYED CLOSED END TYPE,NO.10-32 NF,INTERNAL,1/4 IN.DIA, 0.828 IN.LG,0.065 IN.TO 0.116 IN.GRIP LG,FOR 0.250 IN.TO 0.256 IN.SIZE HOLE	ABC	EA		*	*	*		*		
PA-FZ-Z	5310-034-6656	B42-624SP4	97393	NUT,SELF-LOCKING.....	ABC	EA		*	*	*		*		
PB-FZ-Z	5310-044-2241	NAS1032A5	80205	NUT,SELF-LOCKING,PLATE-STEEL, 1 LUG,FLOATING TYPE,5/16 IN.-24 NF,0.641 IN.W,1.378 IN.LG,0.387 IN.H,2 MTG HOLES,0.130 IN.DIA	ABC	EA		*	*	*		*		
PA-FZ-Z	5310-044-2358	A2501-02	72962	NUT,SELF-LOCKING,PLATE.....	ABC	EA		*	*	*		*		
PA-DZ-Z	5310-045-3945	NAS1330A08K106	80205	NUT,BLIND RIVET-ALUMINUM..... ALLOY,ANODIZED,FLAT COUNTERSUNK HEAD,KEYED OPEN END TYPE,NO.8-32 NC, INTERNAL,0.221 IN.DIA,1/2 IN.LG,0.065 IN.TO 0.106 IN. GRIP LG,FOR 0.221 IN.TO 0.226 IN.SIZE HOLE	ABC	EA		*	*	*		*		
PA-FZ-Z	5310-059-2402	4660H02	80539	NUT,SELF-LOCKING,PLATE-STEEL. W/FLOATING NUT PERMANENTLY ASSEMBLED,NO.10-32 NF,0.391 IN.W,0.989 IN.LG,0.040 IN. THK,2 MTG HOLES,0.098 IN.DIA	ABC	EA		*	*	*		*		
PA-FZ-Z	5310-059-9264	MS21045C6	96906	NUT,SELF-LOCKING,HEXAGON..... CRES,3/8 IN.-24 NF	ABC	EA		*	*	*		*		
PA-DZ-Z	5310-060-2040	MS27130-13	96906	NUT,BLIND RIVET-STEEL,CADMIUM PLATED,FLAT HEAD,OPEN END, NO.8-32 NC,0.438 IN.LG, 0.010 IN.TO 0.075 IN.GRIP LG	ABC	EA						*		
PA-DZ-Z	5310-062-6641	H22-3	75237	NUT,EXTENDED WASHER,DOUBLE... HEXAGON-STEEL,NO.10-32 NF	ABC	EA		*	*	*		*		
PA-FZ-Z	5310-063-2518	MS27130-27K	96906	NUT,BLIND RIVET-STEEL,.....	ABC	EA		*	*	*		*		

(1) SMR CODE	(2) FEDERAL STOCK NUMBER	(3) DESCRIPTION REFERENCE NUMBER & MFR CODE		USABLE ON CODE CH-47	(4) UNIT OF MEAS	(5) QTY INC IN UNIT	(6) 30-DAY DS/GS MAINT ALW (a) 1-20	(b) 21-50	(c) 51-100	(7) 1YR ALWPER 100 EQUIP CNTGCY	(8) DEPOT MAINT ALWPER 100 EQUIP	(9) ILLUSTRATION (a) FIG NO	(b) ITEM NO
		FUNCTIONAL GROUP - 60 BULK MATERIALS											
		CONTINUED										BULK	
		CADMIUM PLATED,FLAT HEAD, OPEN END,KEY TYPE,1/4 IN.-28 NF,0.332 IN.DIA, 0.687 IN.LG,0.080 IN.TO 0.140 IN.GRIP LG											
PA-FZ-Z	5310-063-5999	MS27130-24K	96906	NUT,BLIND RIVET-ALUMINUM..... ALLOY,FLAT HEAD,OPEN END, KEY TYPE,NO.10-32 NF,1/4 IN.DIA,0.641 IN.LG,0.130 IN.TO 0.180 IN.GRIP LG	ABC	EA		*	*	*		*		
PA-OZ-Z	5310-064-1849	MS21044B04	96906	NUT,SELF-LOCKING,HEXAGON..... COPPER ALLOY,CADMIUM PLATED,W/NONMETALLIC INSERT,NO.4-40 NC	ABC	EA		*	*	*		*		
XB-FZ-Z		BACN10DZ3-240	77272	NUT,SELF-LOCKING,HEXAGON.....	ABC	EA		*	*	*		*		
PA-FZ-Z	5310-105-4215	BACN10MS3-18	77272	NUT,SELF-LOCKING.....	ABC	EA		*	*	*		*		
PA-FZ-Z	5310-124-9229	BACN10NX32-14	81205	NUT,SPACER PLATE.....	ABC	EA		*	*	*		*		
PA-OZ-Z	5310-149-9126	MS20002-10	96906	WASHER,FLAT-STEEL ALLOY,..... CADMIUM PLATED,0.631 IN.ID, 1.062 IN.OD,0.062 IN.THK, 5/8 IN.THD SIZE	ABC	EA		*	*	*		*		
PA-OZ-Z	5310-167-0680	AN935-916	88044	WASHER,LOCK-STEEL,CARBON,.... 0.573 IN.ID,0.979 IN.OD, 0.141 IN.THK	ABC	EA		*	*	*		*		
PA-OZ-Z	5310-167-0721	MS35333-41	96906	WASHER,LOCK-STEEL,CARBON,.... CADIUM-PLATED,INTERNAL TEETH,0.320 IN.ID,0.610 IN. OD,0.034 IN.THK,5/16 IN.THD SIZE	ABC	EA		*	*	*		*		
PA-OZ-Z	5310-167-0725	955-4	80049	WASHER,CONVEX-STEEL,CADMIUM.. OR ZINC PLATED,0.266 IN.ID, 0.438 IN.OD,0.078 IN.THK	ABC	EA		*	*	*		*		
PA-OZ-Z	5310-167-0765	AN970-3	88044	WASHER,FLAT-STEEL,CADMIUM.... PLATED,0.203 IN.ID,0.875 IN.OD,0.063 IN.THK,NO.10 BOLT SIZE COMP	ABC	EA		*	*	*		*		
PA-FZ-Z	5310-167-0766	AN970-4	88044	WASHER,FLAT-STEEL,CADMIUM.... PLATED,0.265 IN.ID,1.125 IN.OD,0.063 IN.THK,1/4 IN. BOLT SIZE COMP	ABC	EA		*	*	*		*		
PA-OZ-Z	5310-167-0769	AN970-7	88044	WASHER,FLAT-STEEL,CADMIUM.... PLATED,0.453 IN.ID,1.812 IN.OD,0.109 IN.THK,7/16 IN. BOLT SIZE	ABC	EA		*	*	*		*		
PA-OZ-Z	5310-167-0770	AN970-8	88044	WASHER,FLAT-STEEL,CADMIUM.... PLATED,0.515 IN.ID,2 IN.OD, 0.109 IN.THK,1/2 IN.BOLT SIZE	ABC	EA		*	*	*		*		
PA-OZ-Z	5310-167-0797	AN960C3	88044	WASHER,FLAT-CRES,0.105 IN.ID,	ABC	EA		*	*	*		*		

(1) SMR CODE	(2) FEDERAL STOCK NUMBER	(3) DESCRIPTION — REFERENCE NUMBER & MFR CODE		USABLE ON CODE	(4) UNIT OF MEAS	(5) QTY INC IN UNIT	(6) 30-DAY DS/GS MAINT ALW (a) 1-20	(b) 21-50	(c) 51-100	(7) 1YR ALWPER 100 EQUIP CNTY/CY	(8) DEPOT MAINT ALWPER 100 EQUIP	(9) ILLUSTRATION (a) FIG NO	(b) ITEM NO
		FUNCTIONAL GROUP - 60 BULK MATERIALS		CH-47									
		CONTINUED										BULK	
		1/4 IN.OD,0.032 IN.THK,NO.3 THD SIZE											
PA-OZ-Z	5310-167-0816	AN960-6	88044	WASHER,FLAT-STEEL,CARBON,.... CADMIUM PLATED,0.149 IN.ID, 0.375 IN.OD,0.032 IN.THK, NO.6 THD SIZE COMP	ABC	EA		*	*	*		*		
PA-OZ-Z	5310-167-0818	AN960-10	88044	WASHER,FLAT-STEEL,0.203 IN... ID,0.438 IN.OD,0.063 IN.THK COMP	ABC	EA		*	*	*		*		
PA-OZ-Z	5310-167-0827	AN960-1416	88044	WASHER,FLAT-STEEL,CARBON,.... CADMIUM PLATED,0.890 IN. ID,1-1/2 IN.OD,0.090 IN. THK,7/8 IN.THD SIZE	ABC	EA		*	*	*		*		
PA-OZ-Z	5310-167-1288	AN310-7	88044	NUT,CASTELLATED,HEXAGON..... STEEL,7/16 IN.-20 NF	ABC	EA		*	*	*		*		
PA-OZ-Z	5310-167-1342	AN315-640R	88044	NUT,PLAIN,HEXAGON-STEEL,..... CADMIUM PLATED,NO.6-40 NF	ABC	EA		*	*	*		*		
PA-OZ-Z	5310-176-8118	AN320-20	88044	NUT,SLOTTED,HEXAGON-STEEL,... 1-1/4 IN.-12 NF	ABC	EA		*	*	*		*		
PA-FZ-Z	5310-177-1354	MS21088L4-8-72	96906	NUT ASSEMBLY,SELF-LOCKING,... GANG CHANNEL-ALUMINUM ALLOY CHANNEL,0.516 IN.W,72 IN. LG,0.281 IN.H,72 CRES FLOATING NUTS,HEAT RESISTANT,1/4 IN.-28 NF,1 IN.SPACING	ABC	EA		*	*	*		*		
PA-OZ-Z	5310-183-4357	AN960PD3L	88044	WASHER,FLAT-ALUMINUM ALLOY... ANODIZED,0.105 IN.ID,1/4 IN.OD,0.016 IN.THK,NO.3 THD SIZE	ABC	EA		*	*	*		*		
C PA-HZ-Z	5310-184-8990	MS35338-96	96906	WASHER,LOCK-PHOSPHOR BRONZE,. CADMIUM PLATED,0.088 IN.ID, 0.172 IN.OD,0.020 IN.THK, NO.2 THD SIZE	ABC	EA		*	*	*		*		
PB-HZ-Z	5310-184-8996	MS35338-97	96906	WASHER,LOCK-PHOSPHOR BRONZE,. CADMIUM PLATED,0.115 IN.ID, 0.209 IN.OD,0.025 IN.THK, NO.4 THD SIZE	ABC	EA		*	*	*		*		
PA-OZ-Z	5310-187-2354	AN960PD416	88044	WASHER,FLAT-ALUMINUM ALLOY... ANODIZED,0.265 IN.ID,1/2 IN.OD,0.063 IN.THK,1/4 IN. THD SIZE	ABC	EA		*	*	*		*		
PA-OZ-Z	5310-187-2394	AN960D1616L	88044	WASHER,FLAT-ALUMINUM ALLOY... 1.015 IN.ID,1-3/4 IN.OD, 0.016 IN.THK,1 IN.THD SIZE	ABC	EA		*	*	*		*		
PA-DZ-Z	5310-194-0637	MS9320-10	96906	WASHER,FLAT-STEEL..... NICKEL-CADMIUM PLATED,0.276 IN.ID,1/2 IN.OD,0.062 IN. THK	ABC	EA		*	*	*		*		
PA-OZ-Z	5310-194-9209	MS35336-21	96906	WASHER,LOCK-STEEL CARBON.....	ABC	EA		*	*	*		*		

(1) SMR CODE	(2) FEDERAL STOCK NUMBER	(3) DESCRIPTION — REFERENCE NUMBER & MFR CODE		USABLE ON CODE	(4) UNIT OF MEAS	(5) QTY INC IN UNIT	(6) 30-DAY DS/GS MAINT ALW (a) 1-20	(b) 21-50	(c) 51-100	(7) 1-YR ALWPER 100 EQUIP CNTGCY	(8) DEPOT MAINT ALWPER 100 EQUIP	(9) ILLUSTRATION (a) FIG NO	(b) ITEM NO
		FUNCTIONAL GROUP - 60 BULK MATERIALS		CH-47									
			CONTINUED CADMIUM PLATED,COUNTERSUNK, EXTERNAL TEETH,0.195 IN.ID, 0.354 IN.OD,0.025 IN.THK, NO.10 THD SIZE									BULK	
C PA-OZ-Z	5310-205-8010	AN960C916L	88044 WASHER,FLAT-CRES,0.578 IN.... ID,1.062 IN.OD,0.032 IN. THK,9/16 IN.THD SIZE	ABC	EA		*	*	*		*		
PA-OZ-Z	5310-207-7719	AN364-640A	88044 NUT,SELF-LOCKING,HEXAGON..... STEEL,NO.6-40 NF	ABC	EA		*	*	*		*		
PA-OZ-Z	5310-207-9320	AN256F8	88044 NUT,SELF-LOCKING,PLATE-STEEL, RIGHT ANGLE TYPE,NO.8-32 NC,0.438 IN.W,0.859 IN.LG, 0.469 IN.H,0.062 IN.THK,2 MTG HOLES,0.098 IN.DIA	ABC	EA		*	*	*		*		
PA-FZ-Z	5310-208-2395	4660-02	80539 NUT,SELF-LOCKING,PLATE-STEEL. W/FLOATING NUT PERMANENTLY ASSEMBLED,NO.10-32 NF,0.391 IN.W,0.969 IN.LG,0.020 IN. THK,2 MTG HOLES, 0.098 IN.DIA	ABC	EA		*	*	*		*		
PB-DZ-Z	5310-208-3747	NAS509-7	80205 NUT,PLAIN,HEXAGON-STEEL,7/16. IN.-20 NF,TO BE U/W KEY WASHER NAS513-7	ABC	EA						*		
PB-FZ-Z	5310-208-4025	MS20503-1414	96906 NUT,SELF-LOCKING,HEXAGON..... CRES,7/8 IN.-14 NF	ABC	EA		*	*	*		*		
PA-OZ-Z	5310-208-4134	MS24400D24	96906 NUT,PLAIN,HEXAGON-ALUMINUM... ALLOY,1-7/8 IN.-12N,FOR 1-1/2 IN.OD TUBING	ABC	EA		*	*	*		*		
PB-OZ-Z	5310-222-0704	A3135-017-24A	78553 WASHER,FINISHING-STEEL,..... 0.166 IN.ID,0.572 IN.OD, 0.017 IN.THK	ABC	EA		*	*	*		*		
PA-FZ-Z	5310-225-4680	MS27130-20K	96906 NUT,BLIND RIVET-ALUMINUM..... ALLOY,FLAT HEAD,OPEN END KEY TYPE,NO.10-32 NF,1/4 IN.DIA,0.531 IN.LG,0.010 IN.TO 0.080 IN.GRIP LG	ABC	EA		*	*	*		*		
PB-FZ-Z	5310-226-3911	MS17826-4	96906 NUT,SELF-LOCKING,HEXAGON..... STEEL ALLOY,CADMIUM PLATED, CASTELLATED,W/NONMETALLIC INSERT,1/4 IN.-28 NF	ABC	EA		*	*	*		*		
PA-OZ-Z	5310-261-7162	MS35336-23	96906 WASHER,LOCK-CRES,PASSIVATED.. FINISH,COUNTERSUNK,EXTERNAL TEETH,0.195 IN.ID,0.354 IN. OD,0.025 IN.THK,NO.10 THD SIZE	ABC	EA		*	*	*		*		
PA-OZ-Z	5310-264-1390	MS45901-4	96906 WASHER,FLAT-BRASS,0.203 IN... ID,0.438 IN. OD,0.032 IN. THK,NO.10 THD SIZE	ABC	EA		*	*	*		*		
PA-OZ-Z	5310-268-6023	AN31SC4R	88044 NUT,PLAIN,HEXAGON-CRES,1/4...	ABC	EA		*	*	*		*		

(1) SMR CODE	(2) FEDERAL STOCK NUMBER	(3) DESCRIPTION REFERENCE NUMBER & MFR CODE		USABLE ON CODE	(4) UNIT OF MEAS	(5) QTY INC IN UNIT	(6) 30-DAY DS/GS MAINT ALW (a) 1-20	(b) 21-50	(c) 51-100	(7) 1-YR ALW PER 100 EQUIP CNTGCY	(8) DEPOT MAINT ALW PER 100 EQUIP	(9) ILLUSTRATION (a) FIG NO	(b) ITEM NO
		FUNCTIONAL GROUP - 60 BULK MATERIALS		CH-47									
		CONTINUED											
		IN.-28 NF										BULK	
PA-OZ-Z	5310-268-6025	AN315C5R	88044	NUT,PLAIN,HEXAGON-CRES,5/16.. IN.-24 NF	ABC	EA	*	*	*		*		
PA-OZ-Z	5310-268-6057	AN316C5R	88044	NUT,PLAIN,HEXAGON-CRES,5/16.. IN.-24 NF,37/64 IN.LG	ABC	EA	*	*	*		*		
PA-OZ-Z	5310-268-7313	AN310C8	88044	NUT,CASTELLATED,HEXAGON..... CRES,1/2 IN.-20 NF	ABC	EA	*	*	*		*		
N PB-FZ-Z	5310-281-8419	CL032-1	46384	NUT,PLAIN,CLINCH-STEEL,..... CADMIUM PLATED,0.344 IN.DIA 0.132 IN.H,0.233 IN.DIA PILOT,0.038 IN.LG PILOT	ABC	EA	*	*	*		*		
PB-FZ-Z	5310-282-6903	AN960-2016	88044	WASHER,FLAT-STEEL,CARBON,.... CADMIUM PLATED,1.265 IN.ID, 2 IN.OD,0.090 IN.THK,1-1/4 IN.THD SIZE	ABC	EA	*	*	*		*		
PB-FZ-Z	5310-297-3716	EB108	72962	NUT,EXTENDED WASHER,DOUBLE... HEXAGON-STEEL,5/8 IN.-18 NF,W/NYLON INSERT	ABC	EA	*	*	*		*		
PA-FZ-Z	5310-297-3719	EB098	72962	NUT,EXTENDED WASHER,DOUBLE... HEXAGON-STEEL,W/NYLON INSERT,9/16 IN.-18 NF	ABC	EA	*	*	*		*		
PA-OZ-Z	5310-297-3720	EB126	72962	NUT.....	ABC	EA	*	*	*		*		
PA-FZ-Z	5310-297-3721	EB080	72962	NUT,EXTENDED WASHER,DOUBLE... HEXAGON-STEEL,CADMIUM PLATED,W/NYLON INSERT,1/2 IN.-20 NF,0.875 IN.DIA WASHER	ABC	EA	*	*	*		*		
PB-HZ-Z	5310-297-4085	NAS513-7	80205	WASHER,KEY-SPRING STEEL,..... CADMIUM PLATED,1 INTERNAL KEY,0.459 IN.ID,FOR U/W A 7/16 IN.-20 NF ROD END TERMINAL & NAS509-7 JAM NUT	ABC	EA	*	*	*		*		
XB-FZ-Z		WSI4-5-5	04169	FASTENER ASSEMBLY.....	ABC	EA							
PA-FZ-Z	5310-401-4569	BACN10DZ3-280	81205	NUT,SELF-LOCKING,PLATE.....	ABC	EA	*	*	*		*		
PA-OZ-Z	5310-437-8550	MS25082B20	96906	NUT,PLAIN,HEXAGON-BRASS..... CADMIUM PLATED, 3/8 IN.-32 NF	ABC	EA	*	*	*		*		
PA-FZ-Z	5310-460-4088	BACN10MS3-22	81205	NUT,SELF-LOCKING,PLATE.....	ABC	EA	*	*	*		*		
PA-FZ-Z	5310-465-8950	BACW10UC102	81205	WASHER,FINISHING.....	ABC	EA	*	*	*		*		
R PA-HZ-Z	5365-485-4342	31203	33525	SPACER,FLAT.....	ABC	EA	*	*	*		*		
PB-FZ-Z	5310-488-9137	EB048	72962	NUT,EXTENDED WASHER,DOUBLE... HEXAGON-STEEL,1/4 IN.-28 NF,W/NYLON INSERT	ABC	EA	*	*	*		*		
PA-FZ-Z	5310-489-8836	BACN10DZ3-220	77272	NUT,SELF-LOCKING.....	ABC	EA	*	*	*		*		
PA-FZ-Z	5310-492-8956	BACN10GH3-15	81205	NUT,SELF-LOCKING,PLATE.....	ABC	EA	*	*	*		*		
PB-FZ-Z	5310-497-3895	MS21044N14	96906	NUT,SELF-LOCKING,HEXAGON..... STEEL,CADIUM PLATED, W/NONMETALLIC INSERT,7/8 IN.-14 NF	ABC	EA	*	*	*		*		
PA-FZ-Z	5310-515-8716	AN316C6R	88044	NUT,PLAIN,HEXAGON-CRES,3/8...	ABC	EA	*	*	*		*		

(1) SMR CODE	(2) FEDERAL STOCK NUMBER	(3) DESCRIPTION — REFERENCE NUMBER & MFR CODE		USABLE ON CODE CH-47	(4) UNIT OF MEAS	(5) QTY INC IN UNIT	(6) 30-DAY DS/GS MAINT ALW (a) 1-20	(b) 21-50	(c) 51-100	(7) 1YR ALWPER 100 EQUIP CNTGCY	(8) DEPOT MAINT ALWPER 100 EQUIP	(9) ILLUSTRATION (a) FIG NO	(b) ITEM NO
		FUNCTIONAL GROUP - 60 BULK MATERIALS										BULK	
			CONTINUED										
			IN.-24 NF										
N PA-FZ-Z	5310-527-3634	MS35335-61	96906 WASHER,LOCK.....	ABC	EA		*	*	*		*		
PA-FZ-Z	5310-527-4477	NAS463XDD10NO	80205 NUT,SPACER,PLATE-STEEL,..... 0.063 IN.THK	ABC	EA		*	*	*		*		
PA-FZ-Z	5310-543-5010	NAS463YDD10H	80205 NUT,SPACER,PLATE-ALUMINUM.... ALLOY,ONE LUG FLOATING TYPE,0.406 IN.W,1.064 IN. LG,0.090 IN.THK,2 MTG HOLES,0.105 IN.DIA	ABC	EA		*	*	*		*		
PA-OZ-Z	5310-550-0286	MS35336-15	96906 WASHER,LOCK-STEEL,CARBON..... CADMIUM PLATED,COUNTERSUNK, EXTERNAL TEETH,0.167 IN.ID, 0.322 IN.OD,0.021 IN.THK, NO.8 THD SIZE	ABC	EA		*	*	*		*		
PA-FZ-Z	5310-550-2509	NAS463XDD10H	80205 NUT,SPACER,PLATE-ALUMINUM.... ALLOY,TWO LUG FLOATING TYPE,0.406 IN.W,0.969 IN. LG,0.090 IN.THK,2 MTG HOLES,0.105 IN.DIA	ABC	EA		*	*	*		*		
PB-OZ-Z	5310-551-6794	NAS446-5-1	80205 NUT,SHEET SPRING-STEEL,NO.... 10 SCREW,0.500 IN.W,0.875 IN.LG,0.031 IN.THK	ABC	EA		*	*	*		*		
PA-FZ-Z	5310-584-5275	2752-080	72962 NUT,SELF-LOCKING.....	ABC	EA		*	*	*		*		
PB-FZ-Z	5310-584-5529	AN316C14L	88044 NUT,PLAIN,HEXAGON-STEEL,7/8.. IN.-14 NF	ABC	EA		*	*	*		*		
PA-FZ-Z	5310-585-8627	NAS549L4	80205 WASHER,NONMETALLIC-PHENOLIC,. 0.125 IN.ID,0.312 IN.OD, 0.063 IN.THK	ABC	EA		*	*	*		*		
PA-OZ-Z	5310-595-6902	AN960PD2116L	88044 WASHER,FLAT-ALUMINUM ALLOY... ANODIZED,1.328 IN.ID,2.062 IN.OD,0.016 IN.THK, 1-5/16 IN.THD SIZE	ABC	EA		*	*	*		*		
PA-OZ-Z	5310-596-7718	AN256-10	88044 NUT,SELF-LOCKING,PLATE..... ALUMINUM ALLOY,RIGHT ANGLE TYPE,NO.10-32 NF,0.438 IN. W,0.859 IN.LG,0.469 IN.H, 0.062 IN. THK,2 MTG HOLES, 0.098 IN.DIA	ABC	EA		*	*	*		*		
PA-OZ-Z	5310-596-7756	NAS444-14	80205 NUT,SHEET,SPRING-STEEL,ZINC.. SPRAY,DOUBLE LUG,0.468 IN. W,0.968 IN.LG,0.025 IN.THK, FOR NO.8 SCREW,2 COUNTERSUNK MTG HOLES,3/32 IN.DIA	ABC	EA		*	*	*		*		
PB-FZ-Z	5310-616-1119	AN316C14R	88044 NUT,PLAIN,HEXAGON-CRES,7/8... IN.-14 NF	ABC	EA		*	*	*		*		
PA-FZ-Z	5310-619-5596	MS35340-39	96906 WASHER,LOCK-STEEL CARBON,.... 0.115 IN.ID,0.253 IN.OD, 0.062 IN.W,0.034 IN.THK	ABC	EA		*	*	*		*		
PB-FZ-Z	5310-621-3122	NAS1031C4	80205 NUT,SELF-LOCKING,PLATE-CRES,2	ABC	EA		*	*	*		*		

(1) SMR CODE	(2) FEDERAL STOCK NUMBER	(3) DESCRIPTION REFERENCE NUMBER & MFR CODE		USABLE ON CODE	(4) UNIT OF MEAS	(5) QTY INC IN UNIT	(6) 30-DAY DS/GS MAINT ALW (a) 1-20	(b) 21-50	(c) 51-100	(7) 1-YR ALWPER 100 EQUIP CNTGCY	(8) DEPOT MAINT ALWPER 100 EQUIP	(9) ILLUSTRATION (a) FIG NO	(b) ITEM NO
		FUNCTIONAL GROUP - 60 BULK MATERIALS		CH-47									
		CONTINUED										BULK	
		LUGS,FLOATING TYPE,1/4 IN.-28 NF,0.516 IN.W,1.296 IN.LG,0.387 IN.H,2 MTG HOLES,0.098 IN.DIA											
PB-FZ-Z	5310-622-1722	NAS1031C3	80205	NUT,SELF-LOCKING,PLATE..... CRES,NO.10-32NF,0.416 IN. W,0.984 IN.LG,0.312 IN.H, 2 MTG HOLES,0.098 IN.DIA	ABC	EA	*	*	*		*		
PA-OZ-Z	5310-623-5991	NAS1031A08	80205	NUT,SELF-LOCKING,PLATE..... STEEL,W/FLOATING NUT,NO. 8-32 NC,0.416 IN.W,0.984 IN.LG,0.312 IN.H,2 MTG HOLES,0.098 IN.DIA	ABC	EA	*	*	*		*		
PA-OZ-Z	5310-631-1294	NAS671-6	80205	NUT,PLAIN,HEXAGON-STEEL,HEX.. HEAD,NO.6-32 NC	ABC	EA	*	*	*		*		
PA-OZ-Z	5310-632-1260	NAS395-17-3	80205	NUT,SHEET,SPRING-STEEL,ZINC.. METAL SPRAY FINISH,U TYPE, NO.8Z SCREW SIZE,1/2 IN.W, 3/4 IN.LG,0.028 IN.THK MATERIAL	ABC	EA	*	*	*		*		
PB-FZ-Z	5310-655-5885	NAS1031C08	80205	NUT,SELF-LOCKING,PLATE..... CRES,NO.8-32 NC,5/16 IN.H, 2 MTG HOLES,0.098 IN.DIA	ABC	EA	*	*	*		*		
PB-FZ-Z	5310-655-5886	NAS1031A04	80205	NUT,SELF-LOCKING,PLATE..... STEEL,NO.4-40 NC,7/32 IN.H, 2 MTG HOLES,0.098 IN.DIA	ABC	EA	*	*	*		*		
N PA-OZ-Z	5310-655-6930	MS25082-3	96906	NUT,PLAIN,HEXAGON-STEEL,..... CADMIUM PLATED,0.374 IN.W, 0.78 IN.H O/A	ABC	EA	*	*	*		*		
PA-FZ-Z	5310-670-3347	BACN10DZ3-20	81205	NUT,SPACER.....	ABC	EA	*	*	*		*		
PA-FZ-Z	5310-670-3369	BACN10DZ3-80	81205	NUT,SPACER PLATE.....	ABC	EA	*	*	*		*		
XB-FZ-Z		BACN10DZ3-120	81205	NUT,SELF-LOCKING.....	ABC	EA							
XB-FZ-Z		BACN10DZ3-160	81205	NUT,SPACER PLATE.....	ABC	EA							
PB-FZ-Z	5310-670-4428	BACN10DZ3-200	81205	NUT,SPACER PLATE.....	ABC	EA							
PA-FZ-Z	5310-678-9778	BACN10GH3-2	81205	NUT.....	ABC	EA	*	*	*		*		
PA-FZ-Z	5310-678-9804	BACN10GH3-18	81205	NUT,SELF-LOCKING,PLATE..... ALUMINUM,W/NONFLOATING NUT PERMANENTLY ASSEMBLED,NO. 10-32 NF,1.500 IN.W,2.300 IN.LG,0.050 IN.THK,0.310 IN.DIA,2.240 IN.H, 2 MTG HOLES	ABC	EA	*	*	*		*		
PA-FZ-Z	5310-678-9859	WS1332-25	04169	NUT,SELF-LOCKING,PLATE.....	ABC	EA	*	*	*		*		
PA-FZ-Z	5310-678-9862	BACN10GH3-12	81205	NUT,SELF-LOCKING,PLATE.....	ABC	EA	*	*	*		*		
PA-FZ-Z	5310-678-9863	WS1332-6	04169	NUT,SELF-LOCKING,PLATE.....	ABC	EA	*	*	*		*		
PA-FZ-Z	5310-678-9956	WS132-5	04169	NUT,SELF-LOCKING PLATE.....	ABC	EA	*	*	*		*		
PA-FZ-Z	5310-678-9958	W1332-23	04169	NUT,SELF-LOCKING,PLATE.....	ABC	EA	*	*	*		*		
PA-OZ-Z	5310-680-4984	NAS1032A08	80205	NUT,SELF-LOCKING,PLATE-STEEL. 1 LUG,NO.8-32 NC,0.422 IN.	ABC	EA	*	*	*		*		

(1) SMR CODE	(2) FEDERAL STOCK NUMBER	(3) DESCRIPTION REFERENCE NUMBER & MFR CODE		USABLE ON CODE CH-47	(4) UNIT OF MEAS	(5) QTY INC IN UNIT	(6) 30-DAY DS/GS MAINT ALW (a) 1-20	(b) 21-50	(c) 51-100	(7) 1-YR ALWPER 100 EQUIP CNTGCY	(8) DEPOT MAINT ALWPER 100 EQUIP	(9) ILLUSTRATION (a) FIG NO	(b) ITEM NO
		FUNCTIONAL GROUP - 60	BULK MATERIALS									BULK	
			CONTINUED W,1.094 IN.LG,0.312 IN.H, 2 MTG HOLES,0.098 IN.DIA								*		
PB-DZ-Z	5310-680-6627	MS25082-1	96906 NUT,PLAIN,HEXAGON-STEEL,..... NO.6-32 NC COMP	ABC	EA						*		
PA-OZ-Z	5310-688-1998	NAS1031N8	80205 NUT,SELF-LOCKING,PLATE..... ALUMINUM ALLOY OR STEEL HOUSING,STEEL NUT,W/NYLON INSERT,2 LUGS,1/2 IN.-20 NF,0.859 IN.W,1.602 IN.LG, 0.630 IN.H,2 MTG HOLES, 0.161 IN.DIA	ABC	EA		*	*	*		*		
PA-FZ-Z	5310-690-3814	BACN10GH3-8	81205 NUT,SELF-LOCKING,PLATE.....	ABC	EA		*	*	*		*		
PA-FZ-Z	5310-714-5971	NAS1330A3K116	80205 NUT,BLIND RIVET-ALUMINUM..... ALLOY,FLAT COUNTERSUNK HEAD,KEYED OPEN END TYPE, NO.10-32 NF,INTERNAL,0.578 IN.LG,0.065 IN.TO 0.116 IN. GRIP LG	ABC	EA		*	*	*		*		
PA-FZ-Z	5310-728-0938	MS21049L4	96906 NUT,SELF-LOCKING,PLATE-STEEL, CADMIUM PLATED,2 LUGS,1/4 IN.-28 NF,0.619 IN.W,1.260 IN.LG,0.340 IN.H,2 MTG HOLES,0.098 IN.DIA	ABC	EA		*	*	*		*		
PA-OZ-Z	5310-728-3476	MS21082-4	96906 NUT,SELF-LOCKING,PLATE-STEEL, CADMIUM PLATED, W/NONMETALLIC INSERT,1 LUG, W/FLOATING NUT,1/4 IN.-28 NF,0.531 IN.W,1.316 IN.LG, 0.387 IN.H,2 MTG HOLES, 0.098 IN.DIA	ABC	EA		*	*	*		*		
PA-OZ-Z	5310-728-5510	MS21078-3	96906 NUT,SELF-LOCKING,PLATE..... STEEL,W/NONMETALLIC INSERT,NO.10-32 NF,0.406 IN.W,0.984 IN.LG,0.312 IN. H,2 MTG HOLES,0.098 IN.DIA	ABC	EA		*	*	*		*		
PA-FZ-Z	5310-728-5519	MS21078-4	96906 NUT,SELF-LOCKING,PLATE..... STEEL,W/NONMETALLIC INSERT,1/4 IN.-28 NF,0.516 IN.W,1.296 IN.LG,0.375 IN. H,2 MTG HOLES,0.098 IN.DIA	ABC	EA		*	*	*		*		
PA-FZ-Z	5310-730-9523	BACN10MS3-16	81205 NUT,SPACER,PLATE.....	ABC	EA		*	*	*		*		
PA-FZ-Z	5310-734-1850	MS21071L3	96906 NUT,SELF-LOCKING,PLATE..... STEEL,NO.10-32 NF,0.328 IN. W,0.745 IN.LG,0.250 IN.H, 2 MTG HOLES,0.098 IN.DIA	ABC	EA		*	*	*		*		
PA-OZ-Z	5310-734-5761	AN924-20	88044 NUT,PLAIN,HEXAGON-STEEL,1-5/8 IN.-12N,FOR 1-1/4 IN.OD TUBING	ABC	EA		*	*	*		*		
PB-OZ-Z	5310-761-4221	MS21073L3	96906 NUT,SELF-LOCKING,PLATE,CORNER	ABC	EA		*	*	*		*		

(1) SMR CODE	(2) FEDERAL STOCK NUMBER	(3) DESCRIPTION REFERENCE NUMBER & MFR CODE		USABLE ON CODE	(4) UNIT OF MEAS	(5) QTY INC IN UNIT	(6) 30-DAY DS/GS MAINT ALW (a) 1-20	(b) 21-50	(c) 51-100	(7) 1-YR ALWPER 100 EQUIP CNTGCY	(8) DEPOT MAINT ALWPER 100 EQUIP	(9) ILLUSTRATION (a) FIG NO	(b) ITEM NO
		FUNCTIONAL GROUP - 60 BULK MATERIALS		CH-47									
			CONTINUED										
			STEEL,CADMIUM PLATED,NO. 10-32 NF,0.526 IN.W,0.526 IN.LG,1/4 IN.H,2 MTG HOLES, 0.098 IN.DIA									BULK	
	PA-FZ-Z	5310-764-2391	MS21075-3	96906 NUT,SELF-LOCKING,PLATE-STEEL, 2 LUGS,NO.10-32 NF,0.416 IN.W,0.739 IN.LG,0.250 IN. H,2 MTG HOLES,0.098 IN.DIA	ABC	EA		*	*	*		*		
	XB-FZ-Z		WS1312-5	04169 NUT,SELF-LOCKING,SPACER.....	ABC	EA								
	PA-FZ-Z	5310-769-3630	BACN10MS3-20	81205 NUT ASSEMBLY.....	ABC	EA		*	*	*		*		
	PA-FZ-Z	5310-770-3851	BACN10GH3-3	81205 NUT,SELF-LOCKING,SPACER.....	ABC	EA		*	*	*		*		
	PB-FZ-Z	5310-770-3856	BACN10GH3-4	81205 NUT,SPACER,PLATE.....	ABC	EA		*	*	*		*		
	PA-FZ-Z	5310-770-3881	BACN10GH3-1	81205 NUT,SELF-LOCKING,SPACER.....	ABC	EA		*	*	*		*		
	XB-FZ-Z		WS1312-2-5	04169 NUT SPACER,PLATE.....	ABC	EA								
	PA-FZ-Z	5310-771-7359	MS21076L4	96906 NUT,SELF-LOCKING,PLATE-CRES,. FLOATING TYPE,2 LUGS,1/4 IN.-28 NF,1/2 IN.W,0.801 IN.LG,0.281 IN.H,2 MTG HOLES,0.098 IN.DIA	ABC	EA		*	*	*		*		
	PA-OZ-Z	5310-775-2567	MS21076-3	96906 NUT,SELF-LOCKING,PLATE-CRES,. SILVER PLATED,2 LUGS, NO.10-32 NF,0.416 IN.W, 0.739 IN.LG,1/4 IN.H,0.140 IN.THK,2 MTG HOLES,0.098 IN.DIA	ABC	EA		*	*	*		*		
	PA-FZ-Z	5310-775-2622	MS27130-25K	96906 NUT,BLIND RIVET-STEEL..... CADIUM PLATED,FLAT HEAD, OPEN END,KEY TYPE,1/4 IN.-28 NF,0.332 IN.DIA, 0.625 IN.LG,0.020 IN.TO 0.080 IN.GRIP LG	ABC	EA		*	*	*		*		
N	PA-FZ-Z	5310-777-5789	MS21059L08K	96906 NUT,SELF-LOCKING,PLATE..... CADMIUM-PLATED,NO.6-32, 0.416 IN.W,0.948 IN.LG, 0.032 IN.H,2 MTG HOLES, 0.098 IN.DIA	ABC	EA		*	*	*		*		
N	PA-FZ-Z	5310-777-5786	MS21059L06K	96906 NUT,SELF-LOCKING,PLATE..... CADMIUM-PLATED,NO.6-32, 0.416 IN.W,0.948 IN.LG, 0.032 IN.H,2 MTG HOLES, 0.098 IN.DIA	ABC	EA		*	*	*		*		
	PA-OZ-Z	5310-777-5795	MS21059L5	96906 NUT,SELF-LOCKING,PLATE..... STEEL,5/16 IN.-24 UN,0.609 IN.W,1.292 IN.LG,0.328 IN. H,2 MTG HOLES,0.130 IN.DIA	ABC	EA		*	*	*		*		
N	PA-FZ-Z	5310-778-9478	MS21061L04	96906 NUT,SELF-LOCKING,PLATE.....	ABC	EA		*	*	*		*		
C	PA-FZ-Z	5310-778-9508	MS21061L08K	96906 NUT,SELF-LOCKING,PLATE.....	ABC	EA		*	*	*		*		
N	PA-FZ-Z	5310-778-9514	MS21061L06	96906 NUT,SELF-LOCKING,PLATE..... STEEL,NO.8-32 UN	ABC	EA		*	*	*		*		

(1) SMR CODE	(2) FEDERAL STOCK NUMBER	(3) DESCRIPTION REFERENCE NUMBER & MFR CODE		USABLE ON CODE CH-47	(4) UNIT OF MEAS	(5) QTY INC IN UNIT	(6) 30-DAY DS/GS MAINT ALW (a) 1-20	(b) 21-50	(c) 51-100	(7) 1-YR ALWPER 100 EQUIP CNTGCY	(8) DEPOT MAINT ALWPER 100 EQUIP	(9) ILLUSTRATION (a) FIG NO	(b) ITEM NO
		FUNCTIONAL GROUP - 60	BULK MATERIALS										
PA-FZ-Z	5310-779-3601	MS21062-3	96906	NUT,SELF-LOCKING,PLATE-CRES.. SILVER PLATED,W/FLOATING NUT,NO.10-32 NF,0.422 IN.W, 1.051 IN.LG,0.250 IN.H,2 MTG HOLES,0.098 IN.DIA	ABC	EA		*	*	*		*	BULK	
PA-FZ-Z	5310-779-6585	MS21055L06	96906	NUT,SELF-LOCKING,PLATE,CORNER STEEL,CADMIUM PLATED,NO. 6-32 NC,0.637 IN.W,0.637 IN.LG,0.171 IN.H,2 MTG HOLES,0.098 IN.DIA	ABC	EA		*	*	*		*		
PA-FZ-Z	5310-779-6619	MS21055L4	96906	NUT,SELF-LOCKING PLATE..... CORNER-STEEL,1/4 IN.-28 NF, 0.852 IN.W,0.852 IN.LG, 0.281 IN.H,2 MTG HOLES, 0.098 IN.DIA	ABC	EA		*	*	*		*		
PA-FZ-Z	5310-780-1041	MS21060-4	96906	NUT,SELF-LOCKING,PLATE-CRES.. W/FLOATING NUT,1/4 IN.-28 NF,0.516 IN.W,1.292 IN.LG, 0.281 IN.H,2 MTG HOLES, 0.098 IN.DIA	ABC	EA		*	*	*		*		
PA-FZ-Z	5310-780-1044	MS21060-3K	96906	NUT,SELF-LOCKING PLATE-CRES,.. SILVER PLATED,W/FLOATING NUT,2 LUGS,NO.10-32 NF, 0.416 IN.W,0.948 IN.LG,1/4 IN.H,0.032 IN.THK,2 MTG HOLES,0.098 IN.DIA, COUNTERSUNK OR DIMPLED HOLES	ABC	EA		*	*	*		*		
PA-OZ-Z	5310-780-6351	WS132-40	04169	NUT,SELF-LOCKING,PLATE..... ALUMINUM,W/NONFLOATING NUT PERMANENTLY ASSEMBLED,NO. 10-32 NF,1.500 IN.W,4.500 IN.LG,0.050 IN.THK,0.098 IN.DIA,2 MTG HOLES	ABC	EA		*	*	*		*		
C XB-FZ-Z		BACN10MS3-12	81205	NUT,SPACER,PLATE.....	ABC	EA		*	*	*		*		
PA-FZ-Z	5310-780-6358	BACN10M53-8	81205	NUT,SPACER,PLATE.....	ABC	EA		*	*	*		*		
PA-FZ-Z	5310-780-6362	BACN10MS15-10	81205	NUT,SPACER,PLATE.....	ABC	EA		*	*	*		*		
PA-OZ-Z	5310-780-6373	BACN10DZ3-100	81205	NUT,SPACER,PLATE.....	ABC	EA		*	*	*		*		
PA-FZ-Z	5310-781-9493	MS21075L06	96906	NUT,SELF-LOCKING,PLATE.....	ABC	EA		*	*	*		*		
PA-FZ-Z	5310-786-8797	WS1312-10	04169	NUT,SELF-LOCKING,SPACER.....	ABC	EA		*	*	*		*		
PB-OZ-Z	5310-801-4684	8014684	18876	WASHER,FLAT.....	ABC	EA		*	*	*		*		
PA-FZ-Z	5310-802-4701	MS15795-813	96906	WASHER,FLAT-CRES,PASSWATED... FINISH,0.375 IN.ID,0.875 IN.OD,0.083 IN.THK	ABC	EA		*	*	*		*		
PB-FZ-Z	5310-804-0075	EAB1400	81996	NUT,SELF-LOCKING.....	ABC	EA		*	*	*		*		
PA-OZ-Z	5310-807-1476	MS21042L5	96906	NUT,EXTENDED WASHER,HEXAGON.. STEEL,CADMIUM PLATED, SELF-LOCKING,5/16 IN.-24 NF	ABC	EA		*	*	*		*		
PA-OZ-Z	5310-807-1477	MS21042L6	96906	NUT,EXTENDED WASHER,HEXAGON.. STEEL,3/8 IN.-24 NF	ABC	EA		*	*	*		*		
PA-HZ-Z	5310-807-2513	33488	33525	WASHER,RECESSED.....	ABC	EA		*	*	*		*		

(1) SMR CODE	(2) FEDERAL STOCK NUMBER	(3) DESCRIPTION REFERENCE NUMBER & MFR CODE		USABLE ON CODE	(4) UNIT OF MEAS	(5) QTY INC IN UNIT	(6) 30-DAY DS GS MAINT ALW (a) 1-20	(b) 21-50	(c) 51-100	(7) 1-YR ALWPER 1X EQUIP CNTGCY	(8) DEPOT MAINT ALWPER 1X EQUIP	(9) ILLUSTRATION (a) FIG NO	(b) ITEM NO
		FUNCTIONAL GROUP - 60	BULK MATERIALS	CH-47									
PA-FZ-Z	5310-810-1786	MS21042-6	96906 NUT,EXTENDED WASHER,HEXAGON.. STEEL,CADMIUM PLATED, SELF-LOCKING,3/8 IN.-24 NF	ABC	EA		*	*	*		*	BULK	
PB-FZ-Z	5310-814-7740	NAS1031A6	80205 NUT,SELF-LOCKING,PLATE..... STEEL,3/8 IN.-24 NF,0.479 IN.H,2 MTG HOLES,0.130 IN. DIA	ABC	EA		*	*	*		*		
XB-FZ-Z		NAS1027A06	80205 NUT,SELF-LOCKING,PLATE,CORNER STEEL,NO.6-32 NC,0.703 IN. W,0.703 IN.LG,0.234 IN.H,2 MTG HOLES,0.098 IN.DIA	ABC	EA								
PA-OZ-Z	5310-820-6653	MS35338-50	96906 WASHER,LOCK-STEEL,CARBON,.... CADMIUM PLATED,0.636 IN.ID, 1.079 IN.OD,0.156 IN.THK, 5/8 IN.THD SIZE	ABC	EA		*	*	*		*		
PA-FZ-Z	5310-821-0111	NAS696C06M	80205 NUT,SELF-LOCKING,PLATE-CRES,. NO.6-32 NC,2 MTG HOLES, 0.066 IN.DIA	ABC	EA		*	*	*		*		
PA-FZ-Z	5310-821-2776	HSP779R0041	27914 WASHER,FLAT.....	ABC	EA		*	*	*		*		
PA-DZ-Z	5310-824-1607	ENSN22-7	56878 NUT,SELF-LOCKING,DOUBLE..... HEXAGON-STEEL,CADMIUM PLATED 7/16 IN.-20 NF	ABC	EA						*		
PA-FZ-Z	5310-837-5856	F42ND22-080	72962 NUT,SELF-LOCKING.....	ABC	EA		*	*	*		*		
XB-FZ-Z		BACB28T4-06	81205 WASHER,SHOULDERED AND..... RECESSED-STEEL,0.250 IN.ID, 0.854 IN.OD,0.062 IN.THK	ABC	EA								
PA-FZ-Z	5310-842-1288	BACN10ENT83	81205 NUT,PLATE,SELF-LOCKING.....	ABC	EA		*	*	*		*		
PB-FZ-Z	5310-844-2394	NAS1032A06	80205 NUT,SELF-LOCKING,PLATE-STEEL, 1 LUG,FLOATING TYPE,NO.6-32 NC,0.422 IN.W,1.094 IN.LG, 0.234 IN.H,2 MTG HOLES, 0.098 IN.DIA	ABC	EA		*	*	*		*		
PA-FZ-Z	5310-845-7769	27S5-1	71286 WASHER,LOCK.....	ABC	EA		*	*	*		*		
PA-FZ-Z	5310-846-6546	NAS43DD3-2	80205 WASHER,FLAT-ALUMINUM,NO.8 &.. 10 SCREW SIZE,0.302 IN.TO 0.322 IN.DIA,0.031 IN.THK	ABC	EA		*	*	*		*		
PA-FZ-Z	5310-849-7028	NAS1473A08	80205 NUT,SELF-LOCKING,PLATE-STEEL, CADMIUM PLATED,W/CAP & WASHER & FUEL RESISTANT RUBBER SEAL,2 LUGS,FLOATING TYPE,NO.8-32 NC,0.568 IN.W, 0.989 IN.LG,0.640 IN.H,2 MTG HOLES,0.098 IN.DIA	ABC	EA		*	*	*		*		
PA-FZ-Z	5310-849-7029	NAS1032C08	80205 NUT,PLATE,SELF-LOCKING..... LUG,FLOATING TYPE,NO.8-32 NC,0.422 IN.W,1.094 IN.LG, 0.312 IN.H,2 MTG HOLES, 0.098 IN.DIA	ABC	EA		*	*	*		*		
PA-OZ-Z	5310-852-0800	MS9201-07	96906 NUT,PLAIN,HEXAGON-CRES,5/8... IN.-18 NF,FOR 0.438	ABC	EA		*	*	*		*		

(1) SMR CODE	(2) FEDERAL STOCK NUMBER	(3) DESCRIPTION REFERENCE NUMBER & MFR CODE		USABLE ON CODE CH-47	(4) UNIT OF MEAS	(5) QTY INC IN UNIT	(6) 30-DAY DS/GS MAINT ALW (a) 1-20	(b) 21-50	(c) 51-100	(7) 1-YR ALWPER 100 EQUIP CNTGCY	(8) DEPOT MAINT ALWPER 100 EQUIP	(9) ILLUSTRATION (a) FIG NO	(b) ITEM NO
		FUNCTIONAL GROUP - 60 BULK MATERIALS										BULK	
				CONTINUED									
				IN.OD TUBE									
PA-FZ-Z	5310-852-1115	NAS1329S3KB80	80205	NUT,BLIND RIVET-STEEL,CARBON, CADMIUM PLATED,FLAT HEAD, KEYED CLOSED END TYPE,NO. 10-32 NF,INTERNAL,1/4 IN. DIA,0.781 IN.LG,0.010 IN.TO 0.080 IN.GRIP LG,FOR 0.250 IN.TO 0.256 IN.DIA HOLE	ABC	EA		*	*	*		*		
PA-FZ-Z	5310-853-4439	BACN10NX32-4	77272	NUT,SELF-LOCKING.....	ABC	EA		*	*	*		*		
XB-FZ-Z		BACN10MS3-24	81205	NUT,SELF-LOCKING.....	ABC	EA		*	*	*		*		
PA-FZ-Z	5310-853-9352	BACN10NX32-12	77272	NUT,SELF-LOCKING.....	ABC	EA		*	*	*		*		
PA-FZ-Z	5310-853-9357	BACN10NX32-8	77272	NUT,SELF-LOCKING,HEXAGON..... ALUMINUM ALLOY,ANODIZED OR CHEMICALLY TREATED SURFACE FINISH,W/NONMETALLIC INSERT,3/8 IN.-24 NF	ABC	EA		*	*	*		*		
PA-OZ-Z	5310-857-4959	MS21044C6	96906	NUT,SELF-LOCKING,HEXAGON..... CRES,3/8 IN.-24 NF	ABC	EA		*	*	*		*		
PB-FZ-Z	5310-857-5562	MS21045L8	96906	NUT,SELF-LOCKING,HEXAGON..... STEEL,CADMIUM PLATED, 1/2 IN.-20 NF	ABC	EA		*	*	*		*		
PA-OZ-Z	5310-857-5564	MS21045L08	96906	NUT,SELF-LOCKING,HEXAGON..... STEEL,DRY LUBE,NO.8-32 NC	ABC	EA		*	*	*		*		
PA-FZ-Z	5310-864-5872	AN924-6J	88044	NUT,PLAIN,HEXAGON-CRES,9/16.. IN.-18 NF,FOR 3/8 IN.OD TUBE	ABC	EA		*	*	*		*		
PA-OZ-Z	5310-877-5797	MS21044N3	96906	NUT,SELF-LOCKING,HEXAGON..... STEEL,CADMIUM PLATED, W/NONMETALLIC INSERT, NO.10-32 NF COMP	ABC	EA		*	*	*		*		
PB-FZ-Z	5310-878-5560	EAB1405	81996	NUT,EXTENDED WASHER,DOUBLE... HEXAGON-STEEL,3/8 IN.-24 NF,W/METAL OR NONMETALLIC INSERT	ABC	EA		*	*	*		*		
PA-FZ-Z	5310-889-2549	MS21045-08	96906	NUT,SELF-LOCKING,HEXAGON..... STEEL,NO.8-32 NC	ABC	EA		*	*	*		*		
PA-OZ-Z	5310-889-2589	MS21044C4	96906	NUT,SELF-LOCKING,HEXAGON..... CRES,1/4 IN.-28 NF	ABC	EA		*	*	*		*		
PA-FZ-Z	5310-891-1805	BACW10BD1	81205	WASHER.....	ABC	EA		*	*	*		*		
PA-FZ-Z	5310-893-2734	MF6000-08	75237	NUT,SELF-LOCKING,PLATE..... STEEL,CADMIUM PLATED, W/FLOATING NUT,NO.8-32 NC, 0.415 IN.W,0.734 IN.LG,1/4 IN.H,2 MTG HOLES,0.098 IN. DIA	ABC	EA		*	*	*		*		
PB-FZ-Z	5310-897-3569	BACN10DZ3-150	81205	NUT,SELF-LOCKING,PLATE..... ALUMINUM ALLOY,W/ NONFLOATING NUT PERMANENTLY ASSEMBLED,NO.10-32 NF,1.460	ABC	EA		*	*	*		*		

(1) SMR CODE	(2) FEDERAL STOCK NUMBER	(3) DESCRIPTION — REFERENCE NUMBER & MFR CODE		USABLE ON CODE	(4) UNIT OF MEAS	(5) QTY INC IN UNIT	(6) 30-DAY DS/GS MAINT ALW a. 1-20	b. 21-50	c. 51-100	(7) 1-YR ALW PER 100 EQUIP	(8) DEPOT MAINT ALW PER 100 EQUIP	(9) ILLUSTRATION a. FIG NO	b. ITEM NO
		FUNCTIONAL GROUP - 60 BULK MATERIALS		CH-47									
			CONTINUED IN.W,1.98 IN.LG,0.040 IN. THK,2 MTG HOLES,0.098 IN.DIA									BULK	
PB-FZ-Z	5310-898-9588	BACNDZ3-300	81205 NUT,SELF-LOCKING,PLATE.....	ABC	EA		*	*	*		*		
PA-OZ-Z	5310-898-9698	VS15305-3020-14	77272 WASHER,FLAT.....	ABC	EA		*	*	*		*		
PA-OZ-Z	5310-902-7846	MS21083N7	96906 NUT,SELF-LOCKING,HEXAGON..... STEEL,7/16 IN.-20 NF	ABC	EA		*	*	*		*		
PA-OZ-Z	5310-905-8434	MS2108383	96906 NUT,SELF-LOCKING,HEXAGON..... COPPER BASE ALLOY,CADMIUM PLATED,W/NONMETALLIC INSERT,NO.10-32 NF	ABC	EA		*	*	*		*		
PA-FZ-Z	5310-914-3290	NAS1330S3K216	80205 NUT,BLIND RIVET-STEEL,CARBON, CADMIUM PLATED,FLAT COUNTERSUNK HEAD,KEYED OPEN END TYPE,NO.10-32 NF, INTERNAL,1/4 IN.DIA,0.687 IN.LG,0.166 IN.TO 0.216 IN. GRIP LG,FOR 0.250 IN.TO 0.256 IN.SIZE HOLE	ABC	EA		*	*	*		*		
PA-FZ-Z	5310-915-7965	MS21063L3-7	96906 NUT,ASSEMBLY,SELF-LOCKING.... GANG CHANNEL-ALUMINUM ALLOY CHANNEL,ANODIZED, 0.416 IN.W,72 IN.LG,0.250 IN.H,82 STEEL FLOATING NUTS,CADMIUM PLATED, NO.10-32 NF COMP	ABC	EA		*	*	*		*		
PA-FZ-Z	5310-915-7970	MS21063L3-8	96906 NUT ASSEMBLY,SELF-LOCKING.... GANG CHANNEL-ALUMINUM ALLOY CHANNEL,ANODIZED,0.416 IN. W,72 IN.LG,0.250 IN.H,72 STEEL FLOATING NUTS, CADMIUM PLATED,NO.10-32 NF	ABC	EA		*	*	*		*		
PA-FZ-Z	5310-915-7973	MS21063L3-10	96906 NUT ASSEMBLY,SELF-LOCKING.... GANG CHANNEL-ALUMINUM ALLOY CHANNEL,0.416 IN.W,72 IN.LG,1/4 IN.H,57 STEEL FLOATING NUTS,CADMIUM PLATED,NO.10-32 NF,1-1/4 IN.SPACING	ABC	EA		*	*	*		*		
PA-FZ-Z	5310-915-7985	MS21063L3-16	96906 NUT ASSEMBLY,SELF-LOCKING.... GANG CHANNEL-ALUMINUM ALLOY CHANNEL,0.416 IN.W,72 IN. LG,1/4 IN.H,36 STEEL FLOATING NUTS,CADMIUM PLATED,NO.10-32 NF,2 IN. SPACING	ABC	EA		*	*	*		*		
PA-FZ-Z	5310-920-0060	52ND2398-24-080	72962 NUT,SELF-LOCKING,SPACER.....	ABC	EA		*	*	*		*		
XB-FZ-Z		NAS75-6-003	80205 WASHER,FLAT-STEEL ALLOY..... CADMIUM PLATED,3/8 IN.ID,	ABC	EA								

(1) SMR CODE	(2) FEDERAL STOCK NUMBER	(3) DESCRIPTION REFERENCE NUMBER & MFR CODE		USABLE ON CODE CH-47	(4) UNIT OF MEAS	(5) QTY INC IN UNIT	(6) 30-DAY DS/GS MAINT ALW (a) 1-20	(b) 21-50	(c) 51-100	(7) 1-YR ALWPER 100 EQUIP CNTGCY	(8) DEPOT MAINT ALWPER 100 EQUIP	(9) ILLUSTRATION (a) FIG NO	(b) ITEM NO
		FUNCTIONAL GROUP - 60 BULK MATERIALS											
				CONTINUED								BULK	
				0.501 IN.OD,3/32 IN.THK,3/8 IN.BOLT SIZE									
PA-FZ-Z	5310-929-4077	VS15306-10	77272	WASHER,FLAT.....	ABC	EA	*	*	*		*		
N PB-HZ-Z	5310-929-8538	2700-02PB	80539	NUT,ANCHOR.....	ABC	EA	*	*	*		*		
N PB-FZ-Z	5310-933-8120	MS35338-138	96906	WASHER,LOCK-CRES,PASSIVATED.. FINISH,0.194 IN.ID,0.334 IN.OD,0.047 IN.THK, NO.10 THD SIZE	ABC	EA	*	*	*		*		
PA-OZ-Z	5310-934-9739	MS35649-242	96906	NUT,PLAIN,HEXAGON-STEEL..... CARBON,CADMIUM PLATED, NO.4-40 NC COMP	ABC	EA	*	*	*		*		
PA-OZ-Z	5310-934-9758	MS35649-202	96906	NUT,PLAIN,HEXAGON-STEEL..... CARBON,CADMIUM PLATED, NO.10-24 NC	ABC	EA	*	*	*		*		
PA-OZ-Z	5310-934-9762	MS35649-286	96906	NUT,PLAIN HEXAGON-BRASS..... BLACK OXIDE FINISH NO.8-32 NC	ABC	EA	*	*	*		*		
XB-FZ-Z		BACN10DZ3-260	77272	NUT,SELF-LOCKING.....	ABC	EA							
PA-FZ-Z	5310-935-3555	LHTM40W	72962	NUT,SELF-LOCKING,HEXAGON.....	ABC	EA	*	*	*		*		
PA-OZ-Z	5310-948-9760	MS21083D8	96906	NUT,SELF-LOCKING,HEXAGON..... ALUMINUM ALLOY,ANODIZED, W/NONMETALLIC INSERT, 1/2 IN.-20 NF	ABC	EA	*	*	*		*		
PA-FZ-Z	5310-958-5321	MS27130-21K	96906	NUT,BLIND RIVET-STEEL..... CADMIUM PLATED,FLAT HEAD, OPEN END,KEY TYPE,NO.10-32 NF,1/4 IN.DIA,0.594 IN.LG, 0.080 IN.TO 0.130 IN. GRIP LG	ABC	EA	*	*	*		*		
PA-OZ-Z	5310-962-5581	NAS509-17	80205	NUT,PLAIN,HEXAGON-STEEL..... CADMIUM PLATED,DRILLED,1 IN.-12 NF	ABC	EA	*	*	*		*		
PA-FZ-Z	5310-964-0878	NAS1473A3	80205	NUT,SELF-LOCKING,PLATE-STEEL, CADMIUM PLATED,W/CAP & WASHER & FUEL RESISTANT RUBBER SEAL,2 LUGS,FLOATING TYPE,NO.10-32 NF,0.568 IN. W,0.989 IN.LG,0.640 IN.H,2 MTG HOLES,0.098 IN.DIA	ABC	EA	*	*	*		*		
PA-HZ-Z	5310-964-9511	BACN10EN55	81205	NUT,SELF-LOCKING,PLATE-STEEL. W/RUBBER SEAL,W/PERMANENTLY ASSEMBLED FLOATING NUT,5/16 IN.-24 NF,0.830 IN.W,1.300 IN.LG,0.020 IN.THK,0.890 IN.H,0.130 IN.DIA, 2 MTG HOLES	ABC	EA	*	*	*		*		
PA-FZ-Z	5310-969-4450	BACN10DZ3-140	81205	NUT,SPACER PLATE.....	ABC	EA	*	*	*		*		
PA-FZ-Z	5310-982-6809	MS21044N10	96906	NUT,SELF-LOCKING,HEXAGON..... STEEL,CADMIUM PLATED,	ABC	EA	*	*	*		*		

(1) SMR CODE	(2) FEDERAL STOCK NUMBER	(3) DESCRIPTION REFERENCE NUMBER & MFR CODE			USABLE ON CODE	(4) UNIT OF MEAS	(5) QTY INC IN UNIT	(6) 30-DAY DS/GS MAINT ALW (a) 1-20	(b) 21-50	(c) 51-100	(7) 1-YR ALWPER 100 EQUIP CNTGCY	(8) DEPOT MAINT ALWPER 100 EQUIP	(9) ILLUSTRATION (a) FIG NO	(b) ITEM NO
		FUNCTIONAL GROUP - 60	BULK MATERIALS		CH-47									
				CONTINUED										
				W/NONMETALLIC INSERT,5/8 IN.-18 NF									BULK	
PB-FZ-Z	5310-982-6810	MS21044N12	96906	NUT,SELF-LOCKING,HEXAGON..... STEEL,CADMIUM PLATED, W/NONMETALLIC INSERT,3/4 IN.-16 NF	ABC	EA		*	*	*		*		
PA-FZ-Z	5310-982-6813	MS21044C06	96906	NUT,SELF-LOCKING,HEXAGON..... CRES,W/NONMETALLIC INSERT, NO.6-32 NC	ABC	EA		*	*	*		*		
PA-OZ-Z	5310-982-6816	MS21044C5	96906	NUT,SELF-LOCKING,HEXAGON..... CRES,W/NONMETALLIC INSERT, 5/16 IN.-24 NF	ABC	EA		*	*	*		*		
PA-OZ-Z	5310-989-7773	NAS1068A06	80205	NUT,SELF-LOCKING,PLATE..... STEEL,2 LUGS,NO.6-32 NC, 0.357 IN.W,0.545 IN.LG 0.171 IN.H,2 MTG HOLES, 0.066 IN.DIA	ABC	EA		*	*	*		*		
PA-FZ-Z	5310-995-6712	NAS1330A3KB166	80205	NUT,BLIND RIVET-ALUMINUM..... ALLOY,ANODIZED,FLAT COUNTERSUNK HEAD,KEYED CLOSED END TYPE,NO.10-32 NF,INTERNAL,1/4 IN.DIA, 0.875 IN.LG,0.116 IN.TO 0.166 IN.GRIP LG,FOR 0.250 IN.TO 0.256 IN.SIZE HOLE	ABC	EA		*	*	*		*		
XB-FZ-Z		1-2X7-16TYPEA	83584	PIN,GROOVED,HEADLESS.....	ABC	EA								
XB-FZ-Z		1-2X9-16TYPEA	83584	PIN.....	ABC	EA								
PA-FZ-Z	5315-080-0485	MS20392-2C45	96906	PIN,STRAIGHT,HEADED-STEEL.... ALLOY,CADMIUM PLATED,PAN HEAD NO.2,DRILLED SHANK, 3/16 IN.DIA,1.578 IN.LG, 1.406 IN.EFFECTIVE LG	ABC	EA		*	*	*		*		
C PB-FZ-Z	5315-080-1939	MS20392-1C35	96906	PIN,STRAIGHT,HEADED-STEEL.... CADMIUM PLATED,PAN HEAD, DRILLED SHANK,1/8 IN.DIA, 1.129 IN.LG,1.094 IN. EFFECTIVE LG	ABC	EA		*	*	*		*		
PA-FZ-Z	5315-080-1940	MS20392-2C49	96906	PIN,STRAIGHT,HEADED-STEEL.... ALLOY,CADMIUM PLATED,PAN HEAD,DRILLED SHANK,3/16 IN. DIA,1.703 IN.LG,1.531 IN. EFFECTIVE LG	ABC	EA		*	*	*		*		
PA-FZ-Z	5315-081-7021	MS20392-3C77	96906	PIN,STRAIGHT,HEADED-STEEL.... ALLOY,CADMIUM PLATED,PAN HEAD,DRILLED SHANK,1/4 IN. DIA,2.609 IN.LG,2.406 IN. EFFECTIVE LG	ABC	EA		*	*	*		*		
PA-FZ-Z	5315-081-7030	M20392-5C21	96906	PIN,STRAIGHT,HEADED-STEEL.... ALLOY,CADMIUM PLATED,PAN	ABC	EA		*	*	*		*		

(1) SMR CODE	(2) FEDERAL STOCK NUMBER	(3) DESCRIPTION REFERENCE NUMBER & MFR CODE		USABLE ON CODE	(4) UNIT OF MEAS	(5) QTY INC IN UNIT	(6) 30-DAY DS/GS MAINT ALW (a) 1-20	(b) 21-50	(c) 51-100	(7) 1-YR ALW/PER 100 EQUIP CNTGCY	(8) DEPOT MAINT ALW/PER 100 EQUIP	(9) ILLUSTRATION (a) FIG NO	(b) ITEM NO
		FUNCTIONAL GROUP - 60	BULK MATERIALS	CH-47								BULK	
			CONTINUED HEAD NO.2,DRILLED SHANK,3/8 IN.DIA,0.906 IN.LG,0.656 IN.EFFECTIVE LG										
PA-FZ-Z	5315-198-8098	AN386-1-10	88044 PIN,TAPERED,THREADED-STEEL,.. CADMIUM PLATED,0.205 IN.DIA SMALL END,SMALL END THREADED,NO.10-32 NF, W/DRILLED HOLE,0.070 IN. DIA,1-3/8 IN.LG,1-1/4 IN. GRIP LG	ABC	EA		*	*	*		*		
PA-OZ-Z	5315-234-1851	MS24665-24	96906 PIN,COTTER-CRES,PASSIVATED... FINISH,1/32 IN.DIA,3/4 IN. LG,FOR 3/64 IN.HOLE SIZE	ABC	EA		*	*	*		*		
PA-OZ-Z	5315-234-1852	MS24665-26	96906 PIN,COTTER-CRES,PASSIVATED... FINISH,1/32 IN.DIA,1.00 IN. LG,FOR 3/64 IN.HOLE SIZE	ABC	EA		*	*	*		*		
PA-FZ-Z	5315-234-1860	MS24665-162	96906 PIN,COTTER-CRES,PASSIVATED... FINISH,1/16 IN.DIA,2.00 IN. LG,FOR 5/64 IN.HOLE SIZE	ABC	EA		*	*	*		*		
C PA-HZ-Z	5315-236-8345	MS24665-5	96906 PIN,COTTER-STEEL,CARBON..... CADMIUM PLATED,1/32 IN. DIA,1/2 IN.LG,FOR 3/64 IN. HOLE SIZE	ABC	EA		*	*	*		*		
PA-OZ-Z	5315-239-8031	MS24665-448	96906 PIN,COTTER-CRES,PASSIVATED... FINISH,5/32 IN.DIA,3 IN.LG, FOR 11/64 IN.SIZE HOLE	ABC	EA		*	*	*		*		
PA-DZ-Z	5315-241-2920	AN122705	88044 PIN,STRAIGHT,HEADLESS-STEEL,. 3/16 IN.DIA,1/2 IN.LG COMP	ABC	EA						*		
PA-DZ-Z	5315-241-2922	AN122692	88044 PIN,STRAIGHT,HEADLESS-STEEL,. 1/8 IN.DIA,3/8 IN.LG COMP	ABC	EA						*		
PA-DZ-Z	5315-241-2923	AN122691	88044 PIN,STRAIGHT,HEADLESS-STEEL,. 1/8 IN.DIA,1/4 IN.LG COMP	ABC	EA						*		
N XB-FZ-Z		1-8X11-16TYPEA	83584 PIN,GROOVED,HEADLESS-STEEL,... BLACK OXIDE,STYLE 1,123 IN. MIN,0.125 IN.MAX DIA SMALL END,132 IN.MIN,134 IN.MAX DIA LARGE END,0.687 IN.LG	ABC	EA								
PB-FZ-Z	5315-290-7549	AN302-16-3	88044 NAIL,ESCUTCHEON-WIRE,..... SMOOTH SHANK,0.062 IN.DIA, 3/8 IN.LG	ABC	LB		*	*	*		*		
PA-OZ-Z	5315-597-1520	NAS427K13	80205 PIN,SPRING-STEEL,CADMIUM..... PLATED,0.180 IN.DIA,1.091 IN.LG,0.810 IN.EFFECTIVE LG	ABC	EA		*	*	*		*		
PA-OZ-Z	5315-597-1642	NAS427K17	80205 PIN,SPRING-STEEL,CADMIUM..... PLATED,0.190 IN.DIA,1.341 IN.LG,1.060 IN.EFFECTIVE LG	ABC	EA		*	*	*		*		
PA-OZ-Z	5315-616-4261	MS16562-28	96906 PIN,SPRING-STEEL,CARBON,..... CADMIUM PLATED,SLOTTED, TUBULAR,3/32 IN.DIA,3/4 IN.	ABC	EA		*	*	*		*		

(1) SMR CODE	(2) FEDERAL STOCK NUMBER	DESCRIPTION REFERENCE NUMBER & MFR CODE		USABLE ON CODE	(4) UNIT OF MEAS	(5) QTY INC IN UNIT	(6) 30-DAY DS GS MAINT ALW (a) 1-20	(b) 21-50	(c) 51-100	(7) 1 YR ALWPER NO EQUIP ENTITLEY	(8) DEPOT MAINT ALWPER NO EQUIP	(9) ILLUSTRATION (a) FIG NO	(b) ITEM NO
		FUNCTIONAL GROUP - 60	BULK MATERIALS	CH-47									
			CONTINUED										
			LG,FOR 0.094 IN.TO 0.097 IN.HOLE SIZE									BULK	
PA-FZ-Z	5315-619-3275	NAS561C3-11	80205 PIN,SPRING-CRES,PASSIVATED... FINISH,SLOTTED,0.059 IN.ID, 0.103 IN.OD,11/16 IN.LG	ABC	EA		*	*	*		*		
PA-FZ-Z	5315-664-0401	MS16562-234	96906 PIN,SPRING-CRES,PASSIVATED... FINISH,SLOTTED,TUBULAR,3/16 IN.DIA,1/2 IN.LG,FOR 0.187 IN.TO 0.192 IN.HOLE SIZE	ABC	EA		*	*	*		*		
PB-FZ-Z	5315-685-4846	NAS561C5-11	80205 PIN,SPRING-CRES,PASSIVATED... FINISH,SLOTTED,0.103 IN.ID, 0.167 IN.OD,11/16 IN.LG	ABC	EA		*	*	*		*		
XB-DZ-Z		STD3057-2	91547 KEY,MACHINE-STEEL,0.062 IN.W, 0.125 IN.LG,0.125 IN.H	ABC	EA								
PA-FZ-Z	5315-771-7352	MS20392-1C63	96906 PIN,STRAIGHT,HEADED-STEEL.... ALLOY,CADMIUM PLATED,PAN HEAD,DRILLED SHANK,1/8 IN. DIA,2.141 IN.LG,1.969 IN. EFFECTIVE LG	ABC	EA		*	*	*		*		
PA-FZ-Z	5315-810-3702	MS16562-38	96906 PIN,SPRING-STEEL,CARBON..... CADMIUM PLATED,SLOTTED, TUBULAR,1/8 IN.DIA,1 IN.LG FOR 0.125 IN.TO 0.129 IN.HOLE SIZE	ABC	EA		*	*	*		*		
PA-DZ-Z	5315-811-1232	MS20392-2C23	96906 PIN,STRAIGHT,HEADED-STEEL.... ALLOY,PAN HEAD,DRILLED SHANK,3/16 IN.DIA,0.719 IN. EFFECTIVE LG	ABC	EA		*	*	*		*		
PB-FZ-Z	5315-811-1241	MS20392-2C17	96906 PIN,STRAIGHT,HEADED-STEEL.... ALLOY,DRILLED SHANK,3/16 IN.DIA,0.531 IN.EFFECTIVE LG	ABC	EA		*	*	*		*		
PB-FZ-Z	5315-811-9103	MS20392-1C31	96906 PIN,STRAIGHT,HEADED-STEEL.... ALLOY,CADMIUM PLATED,PAN HEAD,DRILLED SHANK,1/8 IN. DIA,1.141 IN.LG,0.969 IN. EFFECTIVE LG	ABC	EA		*	*	*		*		
PB-FZ-Z	5315-812-1215	MS20392-3C13	96906 PIN,STRAIGHT,HEADED-STEEL.... ALLOY,PAN HEAD,DRILLED SHANK,1/4 IN.DIA,0.406 IN. EFFECTIVE LG	ABC	EA		*	*	*		*		
PB-FZ-Z	5315-812-1216	MS20392-3C19	96906 PIN,STRAIGHT,HEADED-STEEL.... ALLOY,CADMIUM PLATED,PAN HEAD,DRILLED SHANK,1/4 IN. DIA,0.797 IN.LG,0.594 IN.EFFECTIVE LG	ABC	EA		*	*	*		*		
PA-FZ-Z	5315-812-3734	MS20392-1C7	96906 PIN,STRAIGHT,HEADED-STEEL.... ALLOY,CADMIUM PLATED,PAN HEAD,DRILLED SHANK,1/8 IN.	ABC	EA		*	*	*		*		

(1) SMR CODE	(2) FEDERAL STOCK NUMBER	(3) DESCRIPTION REFERENCE NUMBER & MFR CODE			USABLE ON CODE CH-47	(4) UNIT OF MEAS	(5) QTY INC IN UNIT	(6) 30-DAY DS/GS MAINT ALW (a) 1-20	(b) 21-50	(c) 51-100	(7) 1-YR ALWPER 100 EQUIP CNTGCY	(8) DEPOT MAINT ALWPER 100 EQUIP	(9) ILLUSTRATION (a) FIG NO	(b) ITEM NO
		FUNCTIONAL GROUP - 60 BULK MATERIALS												
				CONTINUED DIA,0.391 IN.LG,0.219 IN. EFFECTIVE LG									BULK	
PA-FZ-Z	5315-812-3750	MS20392-1C17	96906	PIN,STRAIGHT,HEADED-STEEL.... ALLOY,CADMIUM PLATED,PAN HEAD,DRILLED SHANK,1/8 IN. DIA,0.703 IN.LG,0.531 IN. EFFECTIVE LG	ABC	EA		*	*	*		*		
PA-FZ-Z	5315-812-3752	MS20392-2C57	96906	PIN,STRAIGHT,HEADED-STEEL,... PAN HEAD,DRILLED SHANK,3/16 IN.DIA,1.953 IN.LG	ABC	EA		*	*	*		*		
PB-FZ-Z	5315-815-9074	AN122769	88044	PIN,STRAIGHT,HEADLESS..... STEEL,0.500 IN.DIA,1 IN.LG	ABC	EA		*	*	*		*		
PA-HZ-Z	5315-823-8743	MS16562-219	96906	PIN,SPRING-CRES,PASSIVATED... FINISH,SLOTTED,TUBULAR,1/8 IN.DIA,3/8 IN.LG,FOR 0.125 IN.TO 0.129 IN.HOLE SIZE	ABC	EA		*	*	*		*		
PA-FZ-Z	5315-826-1576	MS16555-630	96906	PIN,STRAIGHT,HEADLESS-STEEL.. 1/8 IN.DIA,7/8 IN.LG	ABC	EA		*	*	*		*		
PB-FZ-Z	5315-828-3233	AN121658	88044	PIN,STRAIGHT,HEADED-STEEL,... CADMIUM PLATED,DRILLED SHANK,0.187 IN.DIA,0.828 IN.LG,0.690 IN.EFFECTIVE LG	ABC	EA		*	*	*		*		
PA-FZ-Z	5315-835-1484	NAS561P2-13	80205	PIN,SPRING-STEEL,CARBON,..... DRILLED SHANK,0.062 IN.DIA, 0.812 IN.LG,0.012 IN.WALL THK	ABC	EA		*	*	*		*		
PA-OZ-Z	5315-844-3940	MS16562-4	96906	PIN,SPRING-STEEL,CARBON,..... CADMIUM PLATED,SLOTTED, TUBULAR,1/16 IN.DIA,3/8 IN. LG,FOR 0.062 IN.TO 0.065 IN.HOLE SIZE	ABC	EA		*	*	*		*		
PA-FZ-Z	5315-844-3961	MS16562-43	96906	PIN,SPRING-STEEL,CARBON..... CADMIUM PLATED,SLOTTED, TUBULAR,5/32 IN.DIA,7/8 IN. LG,FOR 0.156 IN.TO 0.160 IN.HOLE SIZE	ABC	EA		*	*	*		*		
PA-FZ-Z	5315-844-3962	MS16562-44	96906	PIN,SPRING-STEEL,CARBON..... CADMIUM PLATED,SLOTTED, TUBULAR,5/32 IN.DIA,1 IN. LG,FOR 0.156 IN.TO 0.160 IN.HOLE SIZE	ABC	EA		*	*	*		*		
PA-OZ-Z	5315-849-5578	MS24665-444	96906	PIN,COTTER-CRES,PASSIVATED... FINISH,5/32 IN.DIA,2.00 IN. LG,FOR 11/64 IN.HOLE SIZE	ABC	EA		*	*	*		*		
N PA-OZ-Z	5315-855-6805	MS24665-22	96906	PIN,COTTER-STEEL,PASSIVATED.. 1/32 IN.DIA,1/2 IN.LG	ABC	EA		*	*	*		*		
XB-FZ-Z		MS20392-9C27	96906	PIN,STRAIGHT,HEADED-STEEL,... ALLOY,CADMIUM PLATED,PAN HEAD,DRILLED SHANK,5/8 IN.	ABC	EA								

(1) SMR CODE	(2) FEDERAL STOCK NUMBER	(3) DESCRIPTION REFERENCE NUMBER & MFR CODE			USABLE ON CODE	(4) UNIT OF MEAS	(5) QTY INC IN UNIT	(6) 30-DAY DS/GS MAINT ALW (a) 1-20	(b) 21-50	(c) 51-100	(7) 1YR ALWPER 100 EQUIP CNTGCY	(8) DEPOT MAINT ALWPER 100 EQUIP	(9) ILLUSTRATION (a) FIG NO	(b) ITEM NO
		FUNCTIONAL GROUP - 60	BULK MATERIALS		CH-47									
				CONTINUED DIA,1.172 IN.LG,0.844 IN.EFFECTIVE LG									BULK	
PA-FZ-Z	5315-936-6179	79-048-219-1700	72962	PIN,SPRING.....	ABC	EA		*	*	*		*		
PA-FZ-Z	5315-939-0869	MS20392-1C61	96906	PIN,STRAIGHT,HEADED-STEEL.... ALLOY,PAN HEAD,DRILLED SHANK,1/8 IN.DIA,1.906 IN. EFFECTIVE LG	ABC	EA		*	*	*		*		
PA-FZ-Z	5315-953-5742	MS39086-242	96906	PIN,SPRING,TUBULAR-CRES,..... PASSIVATED FINISH,COILED TYPE,5/32 IN.DIA,3/4 IN.LG, FOR 0.155 IN.TO 0.160 IN. SIZE HOLE	ABC	EA		*	*	*		*		
PA-OZ-Z	5315-957-7059	MS20392-3C47	96906	PIN,STRAIGHT,HEADED-STEEL,... ALLOY,CADMIUM PLATED,PAN HEAD,DRILLED SHANK,1/4 IN. DIA,1.672 IN.LG,1.469 IN. EFFECTIVE LG	ABC	EA		*	*	*		*		
PA-FZ-Z	5315-967-0527	281101	92555	PIN PLUG.....	ABC	EA		*	*	*		*		
PB-FZ-Z	5315-988-9971	MS20392-3C69	96906	PIN,STRAIGHT,HEADED-STEEL.... ALLOY,CADMIUM PLATED,PAN HEAD,DRILLED SHANK,1/4 IN. DIA,2.359 IN.LG,2.156 IN. EFFECTIVE LG	ABC	EA		*	*	*		*		
PA-FZ-Z	5315-990-1338	MS20392-2C19	96906	PIN,STRAIGHT,HEADED-STEEL,... PAN HEAD,DRILLED SHANK,3/16 IN.DIA,0.594 IN. EFFECTIVE LG	ABC	EA		*	*	*		*		
C XD-FZ-Z		BACB30AY5W2	81205	RIVET,BLIND.....	ABC	EA								
PA-FZ-Z	5320-012-0740	MS20426D5-16	96906	RIVET,SOLID-ALUMINUM ALLOY... GR2017-T4,FLAT HEAD, 5/32 IN.DIA,1 IN.LG, 0.766 IN.GRIP LG	ABC	EA		*	*	*		*		
PA-FZ-Z	5320-038-3383	P6A	29666	RIVET,BLIND.....	ABC	EA		*	*	*		*		
PA-FZ-Z	5320-043-1992	BACB30CC6W16	81205	RIVET,BLIND.....	ABC	EA		*	*	*		*		
C XB-FZ-Z		BACB30CC12W17	81205	RIVET,BLIND.....	ABC	EA								
PA-FZ-Z	5320-045-1818	NAS1097AD4-8	80205	RIVET,SOLID-ALUMINUM ALLOY... GR2117-T4,FLUSH SHEAR HEAD 100 DEG,1/8 IN. DIA,0.500 IN.LG	ABC	LB		*	*	*		*		
PA-FZ-Z	5320-054-8386	BACB30CC10W9	81205	RIVET,BLIND.....	ABC	EA		*	*	*		*		
PB-OZ-Z	5320-054-8396	BACB30CC5W5	81205	RIVET,BLIND.....	ABC	EA		*	*	*		*		
PA-FZ-Z	5320-054-8397	BACB30CC6W10	81205	RIVET,BLIND-STEEL,CADMIUM.... PLATED,HEX HEAD, MECHANICALLY EXPANDED, SELF-PLUGGING SHANK W/SLEEVE,3/16 IN.DIA,0.908 IN.LG,0.595 IN.TO 0.656 IN.GRIP LG	ABC	EA		*	*	*		*		
PA-FZ-Z	5320-054-8398	WP200-8	76689	RIVET,BLIND.....	ABC	EA		*	*	*		*		

(1) SMR CODE	(2) FEDERAL STOCK NUMBER	(3) DESCRIPTION REFERENCE NUMBER & MFR CODE			USABLE ON CODE CH-47	(4) UNIT OF MEAS	(5) QTY INC IN UNIT	(6) 30-DAY DS/GS MAINT ALW (a) 1-20	(b) 21-50	(c) 51-100	(7) 1-YR ALWPER 100 EQUIP CNTGCY	(8) DEPOT MAINT ALWPER 100 EQUIP	(9) ILLUSTRATION (a) FIG NO	(b) ITEM NO
		FUNCTIONAL GROUP - 60	BULK MATERIALS											
PA-FZ-Z	5320-055-2389	MLSPM4-2	29666	RIVET,BLIND-NICKEL-COPPER.... ALLOY,CADMIUM PLATED, UNIVERSAL HEAD,MECHANICALLY EXPANDED,SELF-PLUGGING SHANK,1/8 IN.DIA,15/64 IN. LG,0.125 IN.GRIP LG	ABC	EA		*	*	*		*	BULK	
PA-FZ-Z	5320-058-2297	BACB30CC6W18	81205	RIVET,BLIND.....	ABC	EA		*	*	*		*		
PA-FZ-Z	5320-058-2300	BACB30CC10W17	81205	RIVET,BLIND.....	ABC	EA		*	*	*		*		
PA-FZ-Z	5320-058-2305	BACB30CC10W3	81205	RIVET,BLIND.....	ABC	EA		*	*	*		*		
PA-FZ-Z	5320-058-2307	BACB30CC10W13	81205	RIVET,BLIND.....	ABC	EA		*	*	*		*		
PA-FZ-Z	5320-058-2310	BACB30CC10W16	81205	RIVET,BLIND HEXAGON.....	ABC	EA		*	*	*		*		
PA-FZ-Z	5320-058-2311	BACB30CC10W11	81205	RIVET,BLIND.....	ABC	EA		*	*	*		*		
PA-FZ-Z	5320-058-2312	BACB30CC10W19	81205	RIVET,BLIND.....	ABC	EA		*	*	*		*		
PA-FZ-Z	5320-058-2313	BACB30CC10W18	81205	RIVET,BLIND.....	ABC	EA		*	*	*		*		
PB-FZ-Z	5320-060-0421	NAS1466-7	80205	PIN,RIVET-STEEL ALLOY,CADMIUM PLATED,PAN HEAD,PROTRUDING HEAD,SWAGE LOCKING,CLOSE TOLERANCE,3/16 IN.DIA,0.671 IN.LG,0.407 IN.TO 0.469 IN. GRIP LG	ABC	EA		*	*	*		*		
PA-FZ-Z	5320-061-7083	MS20600B4W5	96906	RIVET,BLIND-ALUMINUM ALLOY,.. GR5056,PULL STEM,SELF-PLUGGING,PROTRUDING HEAD, 1/8 IN.DIA,0.251 IN.TO 0.312 IN.GRIP LG, SERRATED STEM	ABC	EA		*	*	*		*		
PA-FZ-Z	5320-061-9660	MS20600B5W4	96906	RIVET,BLIND-ALUMINUM ALLOY,.. GR5056,PULL STEM,SELF-PLUGGING,PROTRUDING HEAD, 5/32 IN.DIA,0.188 IN.TO 0.250 IN.GRIP LG, SERRATED STEM	ABC	EA		*	*	*		*		
PA-FZ-Z	5320-061-9661	MS20600B5W6	96906	RIVET,BLIND-ALUMINUM ALLOY,.. GR5056,PULL STEM, SELF-PLUGGING,PROTRUDING HEAD,5/32 IN.DIA,0.313 IN. TO 0.375 IN.GRIP LG, SERRATED STEM	ABC	EA		*	*	*		*		
PA-FZ-Z	5320-061-9662	MS20600B6W5	96906	RIVET,BLIND-ALUMINUM ALLOY,.. GR5056,PULL STEM,SELF-PLUGGING,PROTRUDING HEAD, 3/16 IN.DIA,0.251 IN.TO 0.312 IN.GRIP LG, SERRATED STEM	ABC	EA		*	*	*		*		
PA-FZ-Z	5320-061-9663	MS20600B6W7	96906	RIVET,BLIND-ALUMINUM ALLOY,.. GR5056,PULL STEM,SELF-PLUGGING,PROTRUDING HEAD, 3/16 IN.DIA,0.376 IN.TO 0.437 IN.GRIP LG,	ABC	EA		*	*	*		*		

(1) SMR CODE	(2) FEDERAL STOCK NUMBER	(3) DESCRIPTION REFERENCE NUMBER & MFR CODE			USABLE ON CODE	(4) UNIT OF MEAS	(5) QTY INC IN UNIT	(6) 30-DAY DS GS MAINT ALW (a) 1-20	(b) 21-50	(c) 51-100	(7) 1 YR ALW PER 100 EQUIP CONTRCY	(8) DEPOT MAINT ALW PER 100 EQUIP	(9) ILLUSTRATION (a) FIG NO	(b) ITEM NO
		FUNCTIONAL GROUP - 60	BULK MATERIALS		CH-47									
			CONTINUED										BULK	
			SERRATED STEM											
PA-FZ-Z	5320-062-0621	MS20600M5W2	96906	RIVET,BLIND-MONEL,PULL STEM.. SELF-PLUGGING,PROTRUDING HEAD,5/32 IN.DIA,0.063 IN. TO 0.125 IN.GRIP LG, SERRATED STEM	ABC	EA		*	*	*		*		
PA-FZ-Z	5320-064-3484	NAS1472-15	80205	PIN,RIVET-STEEL,PAN HEAD,..... PROTRUDING HEAD,SWAGE LOCKING,CLOSE TOLERANCE, 3/8 IN.DIA,1.484 IN.LG	ABC	EA		*	*	*		*		
PA-DZ-Z	5320-069-0053	MS20615-6M16	96906	RIVET,SOLID-MONEL,UNIVERSAL.. HEAD,3/16 IN.DIA,1 IN.LG, 0.719 IN.GRIP LG	ABC	LB		*	*	*		*		
PA-FZ-Z	5320-069-2596	NAS1472-19	80205	PIN,RIVET-STEEL,PAN HEAD,..... PROTRUDING HEAD,SWAGE LOCKING,CLOSE TOLERANCE, 3/8 IN.DIA,1.734 IN.LG	ABC	EA		*	*	*		*		
C PA-FZ-Z	5320-069-5629	BACB30CC6W9	77272	RIVET,BLIND.....	ABC	EA		*	*	*		*		
PA-FZ-Z	5320-069-0781	NAS1669-3L6	81205	RIVET,BLIND.....	ABC	EA		*	*	*		*		
PA-FZ-Z	5320-069-9131	MS20600M5W7	96906	RIVET,BLIND-MONEL,PULL STEM,. SELF-PLUGGING,PROTRUDING HEAD,5/32 IN.DIA,0.376 IN. TO 0.437 IN.GRIP LG, SERRATED STEM	ABC	EA		*	*	*		*		
PB-FZ-Z	5320-071-5925	NAS1097AD4-4	80205	RIVET,SOLID-ALUMINUM ALLOY,.. GR2117-T4,100 DEG FLUSH SHEAR HEAD,1/8 IN.DIA,1/4 IN.LG	ABC	LB		*	*	*		*		
PA-FZ-Z	5320-071-5926	NAS1097AD3-5	80205	RIVET,SOLID-ALUMINUM ALLOY,.. GR2117-T4,FLUSH SHEAR HEAD 100 DEG,3/32 IN.DIA, 5/16 IN.LG	ABC	LB		*	*	*		*		
PA-DZ-Z	5320-080-0475	NAS1398M5-6	80205	RIVET,BLIND-MONEL,PAN HEAD,.. PROTRUDING HEAD,LOCKED SPINDLE,5/32 IN.DIA,0.513 IN.LG,0.313 TO 0.375 IN. IN.GRIP LG	ABC	EA						*		
PA-FZ-Z	5320-089-1257	BACB30CC6W4	81205	RIVET,BLIND.....	ABC	EA		*	*	*		*		
PA-FZ-Z	5320-090-0779	WP260-6	76689	RIVET,BLIND.....	ABC	EA		*	*	*		*		
PA-DZ-Z	5320-090-0783	NAS1465-6	80205	PIN,RIVET-STEEL ALLOY,CADMIUM PLATED,PAN HEAD,PROTRUDING HEAD,SWAGE LOCKING,CLOSE TOLERANCE,5/32 IN.DIA,0.563 IN.LG,0.345 IN.TO 0.406 IN. GRIP LG	ABC	EA		*	*	*		*		
N PA-FZ-Z	5320-115-6368	NAS1398B5-4	80205	RIVET,BLIND,ALUMINUM ALLOY,.. 0.201 IN.TO 0.231 IN.GRIP LG	ABC	EA		*	*	*		*		
PA-FZ-Z	5320-117-6022	MS20426B3-8	96906	RIVET,SOLID-ALUMINUM ALLOY,.. GR5056-H32,FLAT HEAD,3/32	ABC	LB		*	*	*		*		

(1) SMR CODE	(2) FEDERAL STOCK NUMBER	(3) DESCRIPTION REFERENCE NUMBER & MFR CODE		USABLE ON CODE	(4) UNIT OF MEAS	(5) QTY INC IN UNIT	(6) 30-DAY DS GS MAINT ALW (a) 1-20	(b) 21-50	(c) 51-100	(7) 1YR ALWPER 100 EQUIP CNTGCY	(8) DEPOT MAINT ALWPER 100 EQUIP	(9) ILLUSTRATION (a) FIG NO	(b) ITEM NO
		FUNCTIONAL GROUP - 60 BULK MATERIALS		CH-47									
		CONTINUED IN.DIA,1/2 IN.LG,0.359 IN. GRIP LG										BULK	
PA-FZ-Z	5320-117-6375	MS20426B4-3	96906 RIVET,SOLID-ALUMINUM ALLOY,.. GR5056-H32,FLAT HEAD,1/8 IN.DIA,3/16 IN.LG	ABC	LB		*	*	*		*		
PA-FZ-Z	5320-117-6394	MS20426D3-4	96906 RIVET,SOLID-ALUMINUM ALLOY,.. GR2017-T4,FLAT HEAD, 3/32 IN.DIA,1/4 IN.LG	ABC	LB		*	*	*		*		
PA-FZ-Z	5320-117-6396	MS20426D3-6	96906 RIVET,SOLID-ALUMINUM ALLOY,.. GR2017-T4,FLAT HEAD,3/32 IN.DIA,3/8 IN.LG,0.234 IN.GRIP LG	ABC	LB		*	*	*		*		
PA-FZ-Z	5320-117-6516	MS20470AD4-3	96906 RIVET,SOLID-ALUMINUM ALLOY,.. GR2117,UNIVERSAL HEAD, 1/8 IN.DIA,3/16 IN.LG	ABC	LB		*	*	*		*		
PA-FZ-Z	5320-117-6521	MS20470DD6-4	96906 RIVET,SOLID-ALUMINUM ALLOY,.. GR2024,UNIVERSAL HEAD, 3/16 IN.DIA,1/4 IN.LG	ABC	LB		*	*	*		*		
PA-FZ-Z	5320-117-6523	MS20470DD6-6	96906 RIVET,SOLID-ALUMINUM ALLOY,.. GR2024,UNIVERSAL HEAD, 3/16 IN.DIA,3/8 IN.LG, 0.094 IN.GRIP LG	ABC	LB		*	*	*		*		
PA-FZ-Z	5320-117-6525	MS20470DD6-8	96906 RIVET,SOLID-ALUMINUM ALLOY,.. GR2024,UNIVERSAL HEAD, 3/16 IN.DIA,1/2 IN.LG, 0.219 IN.GRIP LG	ABC	LB		*	*	*		*		
PA-FZ-Z	5320-117-6526	MS20470DD6-9	96906 RIVET,SOLID-ALUMINUM ALLOY,.. GR2024,UNIVERSAL HEAD, 3/16 IN.DIA,9/16 IN.LG, 0.282 IN.GRIP LG	ABC	LB		*	*	*		*		
PA-FZ-Z	5320-117-6527	MS20470DD6-10	96906 RIVET,SOLID-ALUMINUM ALLOY,.. GR2024,UNIVERSAL HEAD, 3/16 IN.DIA,5/8 IN.LG, 0.344 IN.GRIP LG	ABC	LB		*	*	*		*		
C PA-FZ-Z	5320-117-6529	MS20470DD6-16	96906 RIVET,SOLID-ALUMINUM ALLOY,.. GR2024,UNIVERSAL HEAD,3/16 IN.DIA,1 IN.LG,0.719 IN. GRIP LG	ABC	LB		*	*	*		*		
PA-OZ-Z	5320-117-6535	MS20470DD8-9	96906 RIVET,SOLID-ALUMINUM ALLOY,.. GR2024,UNIVERSAL HEAD,1/4 IN.DIA,9/16 IN.LG,0.188 IN.GRIP LG	ABC	LB		*	*	*		*		
PA-OZ-Z	5320-117-6536	MS20470DD8-10	96906 RIVET,SOLID-ALUMINUM ALLOY,.. GR2024,UNIVERSAL HEAD,1/4 IN.DIA,5/8 IN.LG,0.250 IN.GRIP LG	ABC	LB		*	*	*		*		
PA-OZ-Z	5320-117-6537	MS20470DD8-12	96906 RIVET,SOLID-ALUMINUM ALLOY,.. GR2024,UNIVERSAL HEAD,1/4 IN.DIA,3/4 IN.LG,0.375 IN.	ABC	LB		*	*	*		*		

(1) SMR CODE	(2) FEDERAL STOCK NUMBER	(3) DESCRIPTION REFERENCE NUMBER & MFR CODE		USABLE ON CODE	(4) UNIT OF MEAS	(5) QTY INC IN UNIT	(6) 30-DAY DS/GS MAINT ALW (a) 1-20	(b) 21-50	(c) 51-100	(7) 1-YR ALW PER 100 EQUIP CNTGCY	(8) DEPOT MAINT ALW PER 100 EQUIP	(9) ILLUSTRATION (a) FIG NO	(b) ITEM NO
		FUNCTIONAL GROUP - 60 BULK MATERIALS		CH-47									
		CONTINUED											
		GRIP LG										BULK	
PA-OZ-Z	5320-117-6541	MS20470DD6-12	96906	RIVET,SOLID-ALUMINUM ALLOY... GR2024,UNIVERSAL HEAD,3/16 IN.DIA,3/4 IN.LG,0.469 IN.GRIP LG	ABC	LB		*	*	*		*		
PA-FZ-Z	5320-117-6813	MS20470AD2-6	96906	RIVET,SOLID-ALUMINUM ALLOY,.. GR2117,UNIVERSAL HEAD, 1/16 IN.DIA,3/8 IN.LG,0.281 IN.GRIP LG	ABC	LB		*	*	*		*		
PA-HZ-Z	5320-117-6814	MS20470AD3-3	96906	RIVET,SOLID-ALUMINUM ALLOY,.. GR2117,UNIVERSAL HEAD, 3/32 IN.DIA,3/16 IN.LG, 0.047 IN.GRIP LG	ABC	LB		*	*	*		*		
PA-OZ-Z	5320-117-6815	MS20470AD3-4	96906	RIVET,SOLID-ALUMINUM ALLOY,.. GR2117,UNIVERSAL HEAD, 3/32 IN.DIA,1/4 IN.LG, 0.109 IN.GRIP LG	ABC	LB		*	*	*		*		
PA-FZ-Z	5320-117-6816	MS20470AD3-5	96906	RIVET,SOLID-ALUMINUM ALLOY,.. GR2117,UNIVERSAL HEAD, 3/32 IN.DIA,5/16 IN.LG, 0.172 IN.GRIP LG	ABC	LB		*	*	*		*		
PA-FZ-Z	5320-117-6817	MS20470AD3-6	96906	RIVET,SOLID-ALUMINUM ALLOY,.. GR2117,UNIVERSAL HEAD, 3/32 IN.DIA,3/8 IN.LG, 0.234 IN.GRIP LG	ABC	LB		*	*	*		*		
PA-OZ-Z	5320-117-6823	MS20470AD3-16	96906	RIVET,SOLID-ALUMINUM ALLOY,.. GR2117,UNIVERSAL HEAD, 3/32 IN.DIA,1 IN.LG, 0.859 IN.GRIP LG	ABC	LB		*	*	*		*		
PA-FZ-Z	5320-117-6824	MS20470AD3-20	96906	RIVET,SOLID-ALUMINUM ALLOY,.. GR2117,UNIVERSAL HEAD,3/32 IN.DIA,1-1/4 IN.LG,1.109 IN.GRIP LG	ABC	LB		*	*	*		*		
PA-OZ-Z	5320-117-6825	MS20470AD3-22	96906	RIVET,SOLID-ALUMINUM ALLOY,.. GR2117,UNIVERSAL HEAD, 3/32 IN.DIA,1-3/8 IN.LG, 1.234 IN.GRIP LG	ABC	LB		*	*	*		*		
PA-FZ-Z	5320-117-6826	MS20470AD4-4	96906	RIVET,SOLID-ALUMINUM ALLOY,.. GR2117,UNIVERSAL HEAD, 1/8 IN.DIA,1/4 IN.LG, 0.062 IN.GRIP LG	ABC	LB		*	*	*		*		
PA-FZ-Z	5320-117-6828	MS20470AD4-6	96906	RIVET,SOLID-ALUMINUM ALLOY,.. GR2117,UNIVERSAL HEAD,1/8 IN.DIA,3/8 IN.LG,0.187 IN. GRIP LG	ABC	LB		*	*	*		*		
PA-FZ-Z	5320-117-6829	MS20470AD4-7	96906	RIVET,SOLID-ALUMINUM ALLOY,.. GR2117,UNIVERSAL HEAD,1/8 IN.DIA,7/16 IN.LG,0.250 IN.GRIP LG	ABC	LB		*	*	*		*		
PA-FZ-Z	5320-117-6830	MS20470AD4-8	96906	RIVET,SOLID-ALUMINUM ALLOY,..	ABC	LB		*	*	*		*		

(1) SMR CODE	(2) FEDERAL STOCK NUMBER	(3) DESCRIPTION REFERENCE NUMBER & MFR CODE		USABLE ON CODE CH-47	(4) UNIT OF MEAS	(5) QTY INC IN UNIT	(6) 30-DAY DS/GS MAINT ALW (a) 1-20	(b) 21-50	(c) 51-100	(7) 1YR ALWPER 100 EQUIP CNTGCY	(8) DEPOT MAINT ALWPER 100 EQUIP	(9) ILLUSTRATION (a) FIG NO	(b) ITEM NO
		FUNCTIONAL GROUP - 60 BULK MATERIALS											
		CONTINUED GR2117,UNIVERSAL HEAD, 1/8 IN. DIA,1/2 IN.LG, 0.312 IN.GRIP LG										BULK	
PA-FZ-Z	5320-117-6832	MS20470AD4-10	96906	RIVET,SOLID-ALUMINUM ALLOY,.. GR2117,UNIVERSAL HEAD,1/8 IN.DIA,5/8 IN.LG.0.437 IN. GRIP LG	ABC	LB		*	*	*		*		
PA-FZ-Z	5320-117-6833	MS2047AD4-12	96906	RIVET,SOLID-ALUMINUM ALLOY,.. GR2117,UNIVERSAL HEAD,1/8 IN.DIA,3/4 IN.LG,0.562 IN.GRIP LG	ABC	LB		*	*	*		*		
PA-FZ-Z	5320-117-6834	MS20470AD4-16	96906	RIVET,SOLID-ALUMINUM ALLOY,.. GR2117,UNIVERSAL HEAD, 1/8 IN.DIA,1 IN.LG 0.812 IN.GRIP LG	ABC	LB		*	*	*		*		
PA-FZ-Z	5320-117-6836	MS20470AD4-24	96906	RIVET,SOLID-ALUMINUM ALLOY,.. GR2117,UNIVERSAL HEAD, 1/8 IN.DIA,1-1/2 IN.LG, 1.312 IN.GRIP LG	ABC	LB		*	*	*		*		
PA-OZ-Z	5320-117-6837	MS20470AD5-4	96906	RIVET,SOLID-ALUMINUM ALLOY,.. GR2117,UNIVERSAL HEAD, 5/32 IN.DIA,1/4 IN.LG, 0.016 IN.GRIP LG	ABC	LB		*	*	*		*		
PA-FZ-Z	5320-117-6839	MS20470AD5-6	96906	RIVET,SOLID-ALUMINUM ALLOY,.. GR2117,UNIVERSAL HEAD, 5/32 IN.DIA,3/8 IN.LG,0.141 IN.GRIP LG	ABC	LB		*	*	*		*		
PA-FZ-Z	5320-117-6840	MS20470AD5-7	96906	RIVET,SOLID-ALUMINUM ALLOY,.. GR2117,UNIVERSAL HEAD, 5/32 IN.DIA,7/16 IN. LG,0.204 IN.GRIP LG	ABC	LB		*	*	*		*		
PB-FZ-Z	5320-117-6841	MS20470AD5-8	96906	RIVET,SOLID-ALUMINUM ALLOY,.. GR2117,UNIVERSAL HEAD, 5/32 IN.DIA,1/2 IN.LG, 0.266 IN.GRIP LG	ABC	LB		*	*	*		*		
PA-FZ-Z	5320-117-6842	MS20470AD5-9	96906	RIVET,SOLID-ALUMINUM ALLOY,.. GR2117,UNIVERSAL HEAD, 5/32 IN.DIA,9/16 IN.LG, 0.329 IN.GRIP LG	ABC	LB		*	*	*		*		
PA-FZ-Z	5320-117-6843	MS20470AD5-10	96906	RIVET,SOLID-ALUMINUM ALLOY,.. GR2117,UNIVERSAL HEAD, 5/32 IN.DIA,5/8 IN.LG, 0.391 IN.GRIP LG	ABC	LB		*	*	*		*		
PA-OZ-Z	5320-117-6844	MS20470AD5-12	96906	RIVET,SOLID-ALUMINUM ALLOY,.. GR2117,UNIVERSAL HEAD, 5/32 IN.DIA,3/4 IN.LG, 0.516 IN.GRIP LG	ABC	LB		*	*	*		*		
PA-OZ-Z	5320-117-6845	MS20470AD5-16	96906	RIVET,SOLID-ALUMINUM ALLOY,.. GR2117,UNIVERSAL HEAD,	ABC	LB		*	*	*		*		

(1) SMR CODE	(2) FEDERAL STOCK NUMBER	(3) DESCRIPTION REFERENCE NUMBER & MFR CODE		USABLE ON CODE	(4) UNIT OF MEAS	(5) QTY INC IN UNIT	(6) 30-DAY DS/GS MAINT ALW (a) 1-20	(b) 21-50	(c) 51-100	(7) 1-YR ALWPER 100 EQUIP CONTGCY	(8) DEPOT MAINT ALWPER 100 EQUIP	(9) ILLUSTRATION (a) FIG NO	(b) ITEM NO
		FUNCTIONAL GROUP - 60	BULK MATERIALS	CH-47									
			CONTINUED 5/32 IN.DIA,1 IN.LG, 0.766 IN.GRIP LG									BULK	
PA-FZ-Z	5320-117-6849	MS20470AD6-4	96906 RIVET,SOLID-ALUMINUM ALLOY,... GR2117,UIVERSAL HEAD, 3/16 IN.DIA,1/4 IN.LG	ABC	LB		*	*	*		*		
PA-FZ-Z	5320-117-6851	MS20470AD6-6	96906 RIVET,SOLID-ALUMINUM ALLOY,... GR2117,UNIVERSAL HEAD, 3/16 IN.DIA,3/8 IN.LG, 0.094 IN.GRIP LG	ABC	LB		*	*	*		*		
PA-OZ-Z	5320-117-6857	MS20470AD6-16	96906 RIVET,SOLID-ALUMINUM ALLOY,... GR2117,UNIVERSAL HEAD, 3/16 IN.DIA,1 IN.LG, 0.719 IN.GRIP LG	ABC	LB		*	*	*		*		
PA-FZ-Z	5320-117-6881	MS20426AD5-4	96906 RIVET,SOLID-ALUMINUM ALLOY,... GR2117-T4,FLAT HEAD,5/32 IN.DIA,1/4 IN.LG,0.016 IN. GRIP LG	ABC	LB		*	*	*		*		
PA-FZ-Z	5320-117-6882	MS20426AD5-5	96906 RIVET,SOLID-ALUMINUM ALLOY,... GR2117-T4,FLAT HEAD, 5/32 IN.DIA,5/16 IN.LG, 0.079 IN.GRIP LG	ABC	LB		*	*	*		*		
PA-FZ-Z	5320-117-6883	MS20426AD5-6	96906 RIVET,SOLID-ALUMINUM ALLOY,... GR2117-T4,FLAT HEAD,5/32 IN.DIA,3/8 IN.LG, 0.141 IN.GRIP LG	ABC	LB		*	*	*		*		
PA-FZ-Z	5320-117-6884	MS20426AD5-7	96906 RIVET,SOLID-ALUMINUM ALLOY,... GR2117-T4,FLAT HEAD,5/32 IN.DIA,7/16 IN.LG, 0.204 IN.GRIP LG	ABC	LB		*	*	*		*		
PA-FZ-Z	5320-117-6885	MS20426AD5-8	96906 RIVET,SOLID-ALUMINUM ALLOY,... GR2117-T4,FLAT HEAD,5/32 IN.DIA,1/2 IN.LG,0.266 IN.GRIP LG	ABC	LB		*	*	*		*		
PA-FZ-Z	5320-117-6888	MS20426AD5-12	96906 RIVET,SOLID-ALUMINUM ALLOY,... GR2117-T4,FLAT HEAD,5/32 IN.DIA,3/4 IN.LG,0.516 IN.GRIP LG	ABC	LB		*	*	*		*		
PA-FZ-Z	5320-117-6891	MS20426AD5-16	96906 RIVET,SOLID-ALUMINUM ALLOY,... GR2117-T4,FLAT HEAD,5/32 IN.DIA,1 IN.LG,0.766 IN.GRIP LG	ABC	LB		*	*	*		*		
PA-FZ-Z	5320-117-6894	MS20426AD5-22	96906 RIVET,SOLID-ALUMINUM ALLOY,... GR2117-T4,FLAT HEAD,5/32 IN.DIA,1-3/8 IN.LG,1.141 IN.GRIP LG	ABC	LB		*	*	*		*		
PA-FZ-Z	5320-117-6937	MS20426AD3-3	96906 RIVET,SOLID-ALUMINUM ALLOY,... GR2117-T4,FLAT HEAD, 3/32 IN.DIA,3/16 IN.LG, 0.047 IN.GRIP LG	ABC	LB		*	*	*		*		
PA-FZ-Z	5320-117-6938	MS20426AD3-4	96906 RIVET,SOLID-ALUMINUM ALLOY,...	ABC	LB		*	*	*		*		

	(1) SMR CODE	(2) FEDERAL STOCK NUMBER	(3) DESCRIPTION REFERENCE NUMBER & MFR CODE		USABLE ON CODE CH-47	(4) UNIT OF MEAS	(5) QTY INC IN UNIT	(6) 30-DAY DS/GS MAINT ALW (a) 1-20	(b) 21-50	(c) 51-100	(7) 1-YR ALWPER 100 EQUIP CNTGCY	(8) DEPOT MAINT ALWPER 100 EQUIP	(9) ILLUSTRATION (a) FIG NO	(b) ITEM NO
			FUNCTIONAL GROUP - 60 BULK MATERIALS											
			CONTINUED GR2117-T4,FLAT HEAD,3/32 IN.DIA,1/4 IN.LG, 0.109 IN.GRIP LG										BULK	
C	PA-FZ-Z	5320-117-6939	MS20426AD3-5	96906	RIVET,SOLID-ALUMINUM ALLOY,.. GR2117-T4,FLAT HEAD,3/32 IN.DIA,5/16 IN.LG,0.172 IN. GRIP LG COMP	ABC	LB		*	*	*		*		
	PA-FZ-Z	5320-117-6942	MS20426AD3-8	96906	RIVET,SOLID-ALUMINUM ALLOY,.. GR2117-T4,FLAT HEAD,3/32 IN.DIA,1/2 IN.LG,0.359 IN. GRIP LG	ABC	LB		*	*	*		*		
	PA-FZ-Z	5320-117-6945	MS20426AD3-12	96906	RIVET,SOLID-ALUMINUM ALLOY,.. GR2117-T4 FLAT HEAD,3/32 IN.DIA,3/4 IN.LG,0.609 IN. GRIP LG	ABC	LB		*	*	*		*		
	PA-FZ-Z	5320-117-6947	MS20426AD3-16	96906	RIVET,SOLID-ALUMINUM ALLOY,.. GR2117-T4,FLAT HEAD,3/32 IN.DIA,1 IN.LG,0.859 IN. GRIP LG	ABC	LB		*	*	*		*		
C	PA-FZ-Z	5320-117-6948	AN426AD4-3	88044	RIVET,SOLID-ALUMINUM ALLOY,.. GR2117-T4,FLAT HEAD, 1/8 IN.DIA,3/16 IN.LG	ABC	LB		*	*	*		*		
	PA-FZ-Z	5320-117-6949	MS20426AD4-4	96906	RIVET,SOLID-ALUMINUM ALLOY,.. GR2117-T4,FLAT HEAD,1/8 IN.DIA,1/4 IN.LG,0.062 IN. GRIP LG	ABC	LB		*	*	*		*		
	PA-FZ-Z	5320-117-6950	MS20426AD4-5	96906	RIVET,SOLID-ALUMINUM ALLOY,.. GR2117-T4,FLAT HEAD,1/8 IN.DIA,5/16 IN.LG, 0.125 IN.GRIP LG	ABC	LB		*	*	*		*		
	PA-FZ-Z	5320-117-6951	MS20426AD4-6	96906	RIVET,SOLID-ALUMINUM ALLOY,.. GR2117-T4,FLAT HEAD,1/8 IN.DIA,3/8 IN.LG,0.187 IN. GRIP LG	ABC	LB		*	*	*		*		
	PA-OZ-Z	5320-117-6952	MS20426AD4-7	96906	RIVET,SOLID-ALUMINUM ALLOY,.. GR2117-T4,FLAT HEAD,1/8 IN. DIA,7/16 IN.LG,1/4 IN.GRIP LG	ABC	LB		*	*	*		*		
	PA-FZ-Z	5320-117-6953	MS20426AD4-8	96906	RIVET,SOLID-ALUMINUM ALLOY,.. GR2117-T4,FLAT HEAD,1/8 IN.DIA,1/2 IN.LG,0.312 IN.GRIP LG	ABC	LB		*	*	*		*		
	PA-FZ-Z	5320-117-6955	MS20426AD4-10	96906	RIVET,SOLID-ALUMINUM ALLOY,.. GR2117-T4,FLAT HEAD,1/8 IN.DIA,5/8 IN.LG,0.437 IN.GRIP LG	ABC	LB		*	*	*		*		
	PA-FZ-Z	5320-117-7231	MS20426DD6-16	96906	RIVET,SOLID-ALUMINUM ALLOY,.. GR2024-T4,FLAT HEAD,3/16 IN.DIA,1 IN.LG,0.719 IN.	ABC	LB		*	*	*		*		

(1) SMP CODE	(2) FEDERAL STOCK NUMBER	(3) DESCRIPTION REFERENCE NUMBER & MFR CODE		USABLE ON CODE	(4) UNIT OF MEAS	(5) QTY INC IN UNIT	(6) 30-DAY OS/GS MAINT ALW (a) 1-25	(b) 21-50	(c) 51-100	(7) 1 YR ALW PER 100 EQUIP INTGY	(8) DEPOT MAINT ALW PER 100 EQUIP	(9) ILLUSTRATION (a) FIG NO	(b) ITEM NO
		FUNCTIONAL GROUP - 60 BULK MATERIALS		CH-47									
			CONTINUED GRIP LG									BULK	
PA-FZ-Z	5320-117-7286	MS20426AD6-6	96906 RIVET,SOLID-ALUMINUM ALLOY,.. GR2117-T4,FLAT HEAD, 3/16 IN.DIA,3/8 IN.LG, 0.094 IN.GRIP LG	ABC	LB		*	*	*		*		
PA-FZ-Z	5320-117-7288	MS20426AD6-8	96906 RIVET,SOLID-ALUMINUM ALLOY,.. GR2117-T4,FLAT HEAD 3/16 IN.DIA,1/2 IN.LG, 0.219 IN.GRIP LG	ABC	LB		*	*	*		*		
PA-OZ-Z	5320-117-7289	MS20426AD6-9	96906 RIVET,SOLID-ALUMINUM ALLOY,.. GR2117-T4,FLAT HEAD, 3/16 IN.DIA,9/16 IN.LG, 0.282 IN.GRIP LG	ABC	LB		*	*	*		*		
PA-FZ-Z	5320-117-7294	MS20426D4-6	96906 RIVET,SOLID-ALUMINUM ALLOY,.. GR2017-T4,FLAT HEAD, 1/8 IN.DIA,3/8 IN.LG, 0.187 IN.GRIP LG	ABC	LB		*	*	*		*		
PA-FZ-Z	5320-118-1997	MS2047085-5	96906 RIVET,SOLID-ALUMINUM ALLOY,.. GR5056,UNIVERSAL HEAD, 5/32 IN.DIA,5/16 IN.LG, 0.079 IN.GRIP LG	ABC	LB		*	*	*		*		
PA-FZ-Z	5320-118-2000	MS2047086-6	96906 RIVET,SOLID-ALUMINUM ALLOY,.. GR5056,UNIVERSAL HEAD, 3/16 IN.DIA,3/8 IN.LG, 0.094 IN.GRIP LG	ABC	LB		*	*	*		*		
PA-FZ-Z	5320-118-2006	MS20427M4-6	96906 RIVET,SOLID-MONEL,FLAT HEAD,. 1/8 IN.DIA,3/8 IN.LG	ABC	LB		*	*	*		*		
PA-FZ-Z	5320-118-2011	MS20427M5-5	96906 RIVET,SOLID-MONEL,FLAT HEAD,. 5/32 IN.DIA,5/16 IN.LG	ABC	LB		*	*	*		*		
PA-DZ-Z	5320-118-2012	MS20427M5-8	96906 RIVET,SOLID-MONEL,FLAT HEAD,. 5/32 IN.DIA,1/2 IN.LG	ABC	LB						*		
PA-FZ-Z	5320-118-2016	MS20427M6-6	96906 RIVET,SOLID-MONEL,FLAT HEAD,. 3/16 IN.DIA,3/8 IN.LG	ABC	LB		*	*	*		*		
PA-FZ-Z	5320-118-2065	MS20427M5-6	96906 RIVET,SOLID-MONEL,FLAT HEAD,. 5/32 IN.DIA,3/8 IN.LG	ABC	LB		*	*	*		*		
C PA-FZ-Z	5320-118-2066	MS20427M5-7	96906 RIVET,SOLID-MONEL,FLAT HEAD,. 5/32 IN.DIA,7/16 IN.LG	ABC	LB						*		
PA-DZ-Z	5320-118-2067	MS20427M5-9	96906 RIVET,SOLID-MONEL,FLAT HEAD,. 5/32 IN.DIA,9/16 IN.LG	ABC	LB						*		
PA-FZ-Z	5320-119-5549	AFS461-5-13	88041 RIVET,BLIND-ALUMINUM ALLOY,.. GR5056-H32,UNIVERSAL HEAD,MECHANICALLY EXPANDED, SELF-PLUGGING SHANK,5/32	ABC	EA		*	*	*		*		

(1) SMR CODE	(2) FEDERAL STOCK NUMBER	(3) DESCRIPTION REFERENCE NUMBER & MFR CODE		USABLE ON CODE	(4) UNIT OF MEAS	(5) QTY INC IN UNIT	(6) 30-DAY DS/GS MAINT ALW (a) 1-20	(b) 21-50	(c) 51-100	(7) 1YR ALWPER 100 EQUIP CNTGCY	(8) DEPOT MAINT ALWPER 100 EQUIP	(9) ILLUSTRATION (a) FIG NO	(b) ITEM NO
		FUNCTIONAL GROUP - 60	BULK MATERIALS	CH-47									
			CONTINUED									BULK	
			IN.DIA,0.286 IN.LG, 0.169 IN.GRIP LG										
N PA-FZ-Z	5320-121-3045	NAS1398B4-4	80205 RIVET,BLIND-ALUMINUM ALLOY,.. 0.125 IN.DIA,0.236 IN.GRIP LG	ABC	EA		*	*	*		*		
PA-FZ-Z	5320-165-8736	MS20470DD4-8	96906 RIVET,SOLID-ALUMINUM ALLOY,.. GR2024,UNIVERSAL HEAD,1/8 IN.DIA,1/2 IN.LG,0.312 IN. GRIP LG	ABC	LB		*	*	*		*		
PA-FZ-Z	5320-165-8785	MS2042B6-6	96906 RIVET,SOLID-ALUMINUM ALLOY,.. GR5056-H32,FLAT HEAD,3/16 IN.DIA,3/8 IN.LG,0.094 IN. GRIP LG	ABC	LB		*	*	*		*		
PA-FZ-Z	5320-165-8811	MS20470B3-6	96906 RIVET,SOLID-ALUMINUM ALLOY,.. GR5056,UNIVERSAL HEAD, 3/32 IN.DIA,3/8 IN.LG,0.234 IN.GRIP LG	ABC	LB		*	*	*		*		
PA-FZ-Z	5320-165-8817	MS20470B5-6	96906 RIVET,SOLID-ALUMINUM ALLOY,.. GR5056,UNIVERSAL HEAD, 5/32 IN.DIA,3/8 IN.LG, 0.141 IN.GRIP LG	ABC	LB		*	*	*		*		
PA-OZ-Z	5320-167-4928	MS20470DD8-28	96906 RIVET,SOLID-ALUMINUM ALLOY,.. GR2024,UNIVERSAL HEAD, 1/4 IN.DIA,1-3/4 IN. LG,1.375 IN.GRIP LG	ABC	LB		*	*	*		*		
PA-FZ-Z	5320-167-4943	AF461-4-3	88041 RIVET,BLIND-ALUMINUM ALLOY,.. GR5056-H32,UNIVERSAL HEAD, MECHANICALLY EXPANDED, SELF-PLUGGING SHANK,1/8 IN. DIA,0.155 IN.LG,0.061 IN. GRIP LG	ABC	EA		*	*	*		*		
PA-FZ-Z	5320-167-4949	AF461-6-31	88041 RIVET,BLIND-ALUMINUM ALLOY,..	ABC	EA		*	*	*		*		

(1) SMR CODE	(2) FEDERAL STOCK NUMBER	(3) DESCRIPTION REFERENCE NUMBER & MFR CODE		USABLE ON CODE	(4) UNIT OF MEAS	(5) QTY INC IN UNIT	(6) 30-DAY DS GS MAINT ALW (A) 1-20	(B) 21-50	(C) 51-100	(7) 1 YR ALWPER 100 EQUIP CNTGCY	(8) DEPOT MAINT ALWPER 100 EQUIP	(9) ILLUSTRATION (A) FIG NO	(B) ITEM NO
		FUNCTIONAL GROUP - 60 BULK MATERIALS		CH-47									
		CONTINUED UNIVERSAL HEAD,MECHANICALLY EXPANDED,SELF-PLUGGING SHANK,3/16 IN.DIA,0.491 IN. LG,0.350 IN.GRIP LG										BULK	
	PA-FZ-Z	5320-177-1143	KB210-8-8	75237	RIVET,BLIND.....	ABC	EA		*	*	*	*	
	PA-FZ-Z	5320-177-1242	KB211-6-6	15653	RIVET,BLIND.....	ABC	EA		*	*	*	*	
	PA-FZ-Z	5320-177-1243	KB211-6-8	15653	RIVET,BLIND.....	ABC	EA		*	*	*	*	
	PA-OZ-Z	5320-205-7686	NAS529-6-6	80205	PIN,RIVET-STEEL,CADMIUM..... PLATED,FLAT HEAD,CLOSE TOLERANCE,3/16 IN.DIA,1/2 IN.LG,0.313 IN.TO 0.375 IN. GRIP LG,U/W NAS528A6 COLLAR	ABC	EA		*	*	*	*	
	PB-FZ-Z	5320-205-7917	NAS1080R8	80205	COLLAR,PIN RIVET-STEEL,..... CARBON,0.259 IN.ID,0.430 IN.OD,0.335 IN.LG	ABC	EA		*	*	*	*	
	PA-FZ-Z	5320-234-1556	MS20426A3-5	96906	RIVET,SOLID-ALUMINUM..... GR1100-F,FLAT HEAD, 3/32 IN.DIA,5/16 IN.LG, 0.172 IN. GRIP LG	ABC	LB		*	*	*	*	
C	PA-FZ-Z	5320-234-1557	MS20426A3-6	96906	RIVET,SOLID-ALUMINUM,..... GR1100-F,FLAT HEAD,3/32 IN. DIA,3/8 IN.LG,0.234 IN.GRIP LG	ABC	LB		*	*	*	*	
N	PA-FZ-Z	5320-234-2587	MS20427-6C16	96906	RIVET,STEEL.....	ABCD	EA		*	*	*	*	
	PA-FZ-Z	5320-234-8556	MS20470A5-7	96906	RIVET,SOLID-ALUMINUM,..... GR1100,UNIVERSAL HEAD, 5/32 IN.DIA,7/16 IN.LG, 0.204 IN.GRIP LG	ABC	LB		*	*	*	*	
	PA-FZ-Z	5320-234-8560	MS20470A4-14	96906	RIVET,SOLID-ALUMINUM,..... GR1100,UNIVERSAL HEAD,1/8 IN.DIA,7/8 IN.LG, 0.687 IN.GRIP LG	ABC	LB		*	*	*	*	
	PA-FZ-Z	5320-239-1285	P4A	29666	RIVET,BLIND-ALUMINUM ALLOY,.. GR5056-H32,UNIVERSAL HEAD,MECHANICALLY EXPANDED SELF-PLUGGING SHANK,1/8 IN. DIA,0.130 IN.LG,0.036 IN.GRIP LG	ABC	EA		*	*	*	*	
	PA-FZ-Z	5320-239-1287	AN461-4-16	88044	RIVET,BLIND-ALUMINUM ALLOY,.. BRAZIER HEAD,1/8 IN.DIA, 0.162 IN.TO 0.186 IN.GRIP RANGE	ABC	EA		*	*	*	*	

(1) SMR CODE	(2) FEDERAL STOCK NUMBER	(3) DESCRIPTION REFERENCE NUMBER & MFR CODE			USABLE ON CODE	(4) UNIT OF MEAS	(5) QTY INC IN UNIT	(6) 30-DAY DS/GS MAINT ALW (a) 1-20	(b) 21-50	(c) 51-100	(7) 1-YR ALWPER 100 EQUIP CNTGCY	(8) DEPOT MAINT ALWPER 100 EQUIP	(9) ILLUSTRATION (a) FIG NO	(b) ITEM NO
		FUNCTIONAL GROUP - 60 BULK MATERIALS			CH-47									
		CONTINUED											BULK	
PA-FZ-Z	5320-242-0299	MS20470AD3-18	96906	RIVET,SOLID-ALUMINUM ALLOY,.. GR2117,UNIVERSAL HEAD,3/32 IN.DIA,1.125 IN.LG	ABC	OZ		*	*	*		*		
PA-OZ-Z	5320-242-0300	MS20470AD4-14	96906	RIVET,SOLID-ALUMINUM ALLOY,.. GR2117,UNIVERSAL HEAD, 1/8 IN.DIA,7/8 IN.LG, 0.687 IN.GRIP LG	ABC	LB		*	*	*		*		
PA-FZ-Z	5320-242-0370	MS20470A3-7	96906	RIVET,SOLID-ALUMINUM,..... GR1100,UNIVERSAL HEAD, 3/32 IN.DIA,7/16 IN.LG, 0.297 IN.GRIP LG	ABC	LB		*	*	*		*		
PA-FZ-Z	5320-243-0668	AFS461-6-12	88041	RIVET,BLIND.....	ABC	EA		*	*	*		*		
C ------Z	5320-243-3953	P5H	29666	RIVET,BLIND,ALUMINUM ALLOY,.. GR5056-H32,UNIVERSAL HEAD,MECHANICALLY EXPANDED, SELF-PLUGGING SHANK,5/32 IN.DIA,0.379 IN.LG,0.262 IN.GRIP LG	ABC	EA								
PA-FZ-Z	5320-243-8356	MS20470AD2-4	96906	RIVET,SOLID-ALUMINUM ALLOY,.. GR2117,UNIVERSAL HEAD, 1/16 IN.DIA,1/4 IN.LG, 0.156 IN.GRIP LG	ABC	LB		*	*	*		*		
PB-FZ-Z	5320-245-3453	MS20470DD4-14	96906	RIVET,SOLID-ALUMINUM ALLOY,.. GR2024,UNIVERSAL HEAD,1/8 IN.DIA,7/8 IN.LG,0.687 IN. GRIP LG	ABC	LB		*	*	*		*		
PA-FZ-Z	5320-245-3459	MS20470DD5-7	96906	RIVET,SOLID-ALUMINUM ALLOY,..	ABC	LB		*	*	*		*		

(1) SMR CODE	(2) FEDERAL STOCK NUMBER	(3) DESCRIPTION REFERENCE NUMBER & MFR CODE		USABLE ON CODE	(4) UNIT OF MEAS	(5) QTY INC IN UNIT	(6) 30-DAY DS/GS MAINT ALW (a) 1-20	(b) 21-50	(c) 51-100	(7) 1-YR ALWPER 100 EQUIP CNTGCY	(8) DEPOT MAINT ALWPER 100 EQUIP	(9) ILLUSTRATION (a) FIG NO	(b) ITEM NO
		FUNCTIONAL GROUP - 60	BULK MATERIALS	CH-47									
			CONTINUED									BULK	
			GR2024,UNIVERSAL HEAD, 5/32 IN.DIA,7/16 IN.LG, 0.204 IN.GRIP LG										
PA-HZ-Z	5320-245-4325	MS20470B4-3	96906 RIVET,SOLID-ALUMINUM ALLOY,.. GR5056,UNIVERSAL HEAD,1/8 IN.DIA,3/16 IN.LG	ABC	LB		*	*	*		*		
PA-FZ-Z	5320-248-1904	AF461-6-24	88041 RIVET,BLIND-ALUMINUM ALLOY,.. UNIVERSAL HEAD,MECHANICALLY EXPANDED,SELF-PLUGGING SHANK,3/16 IN.DIA,0.417 IN. LG,0.276 IN.GRIP LG	ABC	EA		*	*	*		*		
PA-FZ-Z	5320-256-1937	MS20615-5M10	96906 RIVET,SOLID-MONEL,UNIVERSAL.. HEAD,5/32 IN.DIA,5/8 IN. LG,0.391 IN.GRIP LG	ABC	LB		*	*	*		*		
PB-FZ-Z	5320-256-1942	MS20615-4M12	96906 RIVET,SOLID-MONEL,UNIVERSAL.. HEAD,1/8 IN.DIA,0.750 IN. LG,0.562 IN.GRIP LG	ABC	LB		*	*	*		*		
PA-FZ-Z	5320-256-1957	MS20615-3M8	96906 RIVET,SOLID-MONEL,UNIVERSAL.. HEAD,3/32 IN.DIA,0.500 IN. LG,0.359 IN.GRIP LG	ABC	LB		*	*	*		*		
PA-FZ-Z	5320-262-7672	NAS1496-6	80205 PIN,RIVET-STEEL,PAN HEAD,.... PROTRUDING HEAD,SWAGE LOCKING,CLOSE TOLERANCE, 3/16 IN.DIA,0.608 IN.LG, 0.345 IN.TO 0.406 IN. GRIP RANGE	ABC	EA		*	*	*		*		
PA-FZ-Z	5320-262-7751	NAS1496-3	80205 PIN,RIVET-STEEL,PAN HEAD,.... PROTRUDING HEAD,SWAGE LOCKING,CLOSE TOLERANCE, 3/16 IN.DIA,0.435 IN.LG, 0.157 IN.TO 0.219 IN. GRIP LG	ABC	EA		*	*	*		*		
PA-FZ-Z	5320-262-7752	NAS1496-4	80205 PIN,RIVET-STEEL,PROTRUDING... HEAD,SWAGE LOCKING,CLOSE TOLERANCE,3/16 IN.DIA, 0.498 IN.LG,0.220 IN.TO 0.281 IN.GRIP LG	ABC	EA		*	*	*		*		
PA-FZ-Z	5320-262-7959	NAS1496-12	80205 PIN,RIVET-STEEL,PAN HEAD,.... PROTRUDING HEAD,SWAGE LOCKING,CLOSE TOLERANCE, 3/16 IN.DIA,0.998 IN.LG, 0.720 IN.TO 0.781 IN. GRIP LG	ABC	EA		*	*	*		*		
PA-FZ-Z	5320-264-3320	MS20427M4-9	96906 RIVET,SOLID-MONEL,FLAT HEAD,. 1/8 IN.DIA,9/16 IN.LG	ABC	LB		*	*	*		*		
PA-OZ-Z	5320-264-4208	NAS1097AD3-4	80205 RIVET,SOLID-ALUMINUM ALLOY,.. GR2117-T4,100 DEG FLUSH SHEAR HEAD,3/32 IN.DIA,1/4 IN.LG	ABC	LB		*	*	*		*		
PA-FZ-Z	5320-264-4297	MS20426A5-6	96906 RIVET,SOLID-ALUMINUM.....	ABC	LB		*	*	*		*		

(1) SMR CODE	(2) FEDERAL STOCK NUMBER	(3) DESCRIPTION REFERENCE NUMBER & MFR CODE		USABLE ON CODE	(4) UNIT OF MEAS	(5) QTY INC IN UNIT	(6) 30-DAY DS/GS MAINT ALW (a) 1-20	(b) 21-50	(c) 51-100	(7) 1-YR ALWPER 100 EQUIP CNTGCY	(8) DEPOT MAINT ALWPER 100 EQUIP	(9) ILLUSTRATION (a) FIG NO	(b) ITEM NO
		FUNCTIONAL GROUP - 60 BULK MATERIALS		CH-47									
		CONTINUED GR1100-F,FLAT HEAD,5/32 IN. DIA,3/8 IN.LG,0.141 IN.GRIP LG										BULK	
PA-HZ-Z	5320-264-4311	MS20426A4-10	96906	RIVET,SOLID-ALUMINUM,..... GR1100-F,FLAT HEAD,1/8 IN. DIA,5/8 IN.LG,0.437 IN.GRIP LG	ABC	LB		*	*	*		*		
PA-FZ-Z	5320-264-4425	MS20426A3-10	96906	RIVET,SOLID-ALUMINUM,..... GR1100-F,FLAT HEAD,3/32 IN.DIA,5/8 IN.LG,0.484 IN. GRIP LG	ABC	EA		*	*	*		*		
PA-FZ-Z	5320-264-4444	MS20470B8-8	96906	RIVET,SOLID-ALUMINUM ALLOY,... UNIVERSAL HEAD,1/4 IN.DIA, 0.500 IN.LG	ABC	LB		*	*	*		*		
PA-FZ-Z	5320-264-4469	NAS1097AD5-10	80205	RIVET,SOLID-ALUMINUM ALLOY,... GR2117-T4,100 DEG,FLUSH SHEAR HEAD,5/32 IN.DIA, 0.625 IN.LG	ABC	LB		*	*	*		*		
PA-FZ-Z	5320-270-2774	MS20427M5-10	96906	RIVET,SOLID-MONEL,FLAT HEAD,.. 5/32 IN.DIA,5/8 IN.LG	ABC	LB		*	*	*		*		
PA-FZ-Z	5320-286-4209	MS20426A3-2	96906	RIVET,SOLID-ALUMINUM,..... GR1100-F,FLAT HEAD,3/32 IN.DIA,1/8 IN.LG	ABC	EA		*	*	*		*		
PA-FZ-Z	5320-286-4716	AFS461-6-35	88041	RIVET,BLIND-ALUMINUM ALLOY,.. OVAL HEAD,MECHANICALLY EXPANDED,SELF-PLUGGING SHANK,3/16 IN.DIA,0.528 IN. LG,0.387 IN.GRIP LG	ABC	EA		*	*	*		*		
PA-FZ-Z	5320-286-5957	MS20426A5-5	96906	RIVET,SOLID-ALUMINUM,..... GR1100-F,FLAT HEAD,5/32 IN.DIA,5/16 IN.LG, 0.079 IN.GRIP LG	ABC	LB		*	*	*		*		
XB-FZ-Z		BA10A1H	92215	RIVET,BLIND.....	ABC	EA								
PA-OZ-Z	5320-489-4823	LCC6	29666	COLLAR,RIVET PIN-ALUMINUM,... 0.187 IN.ID,0.304 IN.OD, 0.248 IN.H,0.0555 IN.THK	ABC	EA		*	*	*		*		
C PA-FZ-Z	5320-489-4824	NAS1080-8	80205	COLLAR,RIVET PIN-ALUMINUM,...	ABC	EA						*		

(1) SMR CODE	(2) FEDERAL STOCK NUMBER	(3) DESCRIPTION REFERENCE NUMBER & MFR CODE		USABLE ON CODE	(4) UNIT OF MEAS	(5) QTY INC IN UNIT	(6) 30-DAY DS/GS MAINT ALW (a) 1-20	(b) 21-50	(c) 51-100	(7) 1-YR ALWPER 100 EQUIP CNTGCY	(8) DEPOT MAINT ALWPER 100 EQUIP	(9) ILLUSTRATION (a) FIG NO	(b) ITEM NO
		FUNCTIONAL GROUP - 60 BULK MATERIALS		CH-47									
			CONTINUED 0.246 IN.ID,0.402 IN.OD, 0.0740 IN.THK,0.325 IN.H									BULK	
PA-FZ-Z	5320-527-5163	NAS1456-6	80205 PIN,RIVET-STEEL,PAN HEAD,.... PULL TYPE,SWAGE LOCKING, CLOSE TOLERANCE,3/16 IN. DIA,0.608 IN.LG,0.345 IN.TO 0.406 IN.GRIP RANGE	ABC	EA		*	*	*		*		
PA-FZ-Z	5320-531-0707	NAS1456-7	80205 PIN,RIVET-STEEL ALLOY,CADMIUM PLATED,FLAT HEAD,SWAGE LOCKING,CLOSE TOLERANCE, 3/16 IN.DIA,0.671 IN.LG, 0.407 IN.TO 0.469 IN.GRIP LG	ABC	EA		*	*	*		*		
PA-FZ-Z	5320-531-0711	NAS1456-5	80205 PIN,RIVET-STEEL ALLOY,CADMIUM PLATED,FLAT HEAD,SWAGE LOCKING,CLOSE TOLERANCE, 3/16 IN.DIA,0.546 IN.LG, 0.282 IN.TO 0.344 IN.GRIP LG	ABC	EA		*	*	*		*		
PA-FZ-Z	5320-531-0713	NAS1456-4	80205 PIN,RIVET-STEEL,CADMIUM..... PLATED,FLAT COUNTERSUNK HEAD,SWAGE LOCKING,PULL TYPE,CLOSE TOLERANCE,3/16 IN.DIA,0.483 IN.LG,0.220 IN.TO 0.281 IN.GRIP LG	ABC	EA		*	*	*		*		
PA-FZ-Z	5320-531-0715	NAS1466-8	80205 PIN,RIVET-STEEL,PAN HEAD,.... PROTRUDING HEAD,SWAGE LOCKING,CLOSE TOLERANCE, 3/16 IN.DIA,2.190 IN.LG	ABC	EA		*	*	*		*		
PA-FZ-Z	5320-531-0728	NAS1466-10	80205 PIN,RIVET-STEEL,PAN HEAD,.... PROTRUDING HEAD,SWAGE LOCKING,CLOSE TOLERANCE, 3/16 IN.DIA,0.813 IN.LG, 0.595 IN.TO 0.656 IN. GRIP LG	ABC	EA		*	*	*		*		
PB-FZ-Z	5320-531-0736	NAS1468-10	80205 PIN,RIVET-STEEL ALLOY,CADMIUM PLATED,PAN HEAD,PROTRUDING HEAD,SWAGE LOCKING,CLOSE TOLERANCE,1/4 IN.DIA,0.937 IN.LG,0.595 IN.TO 0.656 IN. GRIP LG	ABC	EA		*	*	*		*		
PA-FZ-Z	5320-531-0739	NAS1468-12	80205 PIN,RIVET-STEEL ALLOY,CADMIUM PLATED,PAN HEAD,PROTRUDING HEAD,SWAGE LOCKING,CLOSE TOLERANCE,1/4 IN.DIA,1.062 IN.LG,0.720 IN.TO 0.781 IN. GRIP LG	ABC	EA		*	*	*		*		
PA-FZ-Z	5320-531-0744	NAS1466-3	80205 PIN,RIVET-STEEL ALLOY,CADMIUM PLATED,PAN HEAD,PROTRUDING	ABC	EA		*	*	*		*		

(1) SMR CODE	(2) FEDERAL STOCK NUMBER	(3) DESCRIPTION REFERENCE NUMBER & MFR CODE		USABLE ON CODE CH-47	(4) UNIT OF MEAS	(5) QTY INC IN UNIT	(6) 30-DAY DS/GS MAINT ALW (a) 1-20	(b) 21-50	(c) 51-100	(7) 1-YR ALWPER 100 EQUIP CNTGCY	(8) DEPOT MAINT ALWPER 100 EQUIP	(9) ILLUSTRATION (a) FIG NO	(b) ITEM NO
		FUNCTIONAL GROUP - 60 BULK MATERIALS										BULK	
			CONTINUED HEAD,SWAGE LOCKING,CLOSE TOLERANCE,3/16 IN.DIA,0.421 IN.LG,0.157 IN.TO 0.219 IN. GRIP LG										
PA-FZ-Z	5320-531-0791	NAS1468-7	80205 PIN,RIVET-STEEL ALLOY,CADMIUM PLATED,PAN HEAD,PROTRUDING HEAD,SWAGE LOCKING,CLOSE TOLERANCE,1/4 IN.DIA,0.749 IN.LG,0.407 IN.TO 0.469 IN. GRIP LG	ABC	EA		*	*	*		*		
PA-OZ-Z	5320-531-0792	NAS1466-4	80205 PIN,RIVET-STEEL ALLOY,CADMIUM PLATED,PAN HEAD,PROTRUDING HEAD,SWAGE LOCKING,CLOSE TOLERANCE,3/16 IN.DIA,0.483 IN.LG,0.220 IN.TO 0.281 IN. GRIP LG	ABC	EA		*	*	*		*		
PA-FZ-Z	5320-531-0793	NAS1468-5	80205 PIN,RIVET-STEEL ALLOY,CADMIUM PLATED,PAN HEAD,PROTRUDING HEAD,SWAGE LOCKING,CLOSE TOLERANCE,1/4 IN.DIA,0.624 IN.LG,0.282 IN.TO 0.344 IN. GRIP LG	ABC	EA		*	*	*		*		
PA-FZ-Z	5320-543-3680	MS20426A4-7	96906 RIVET,SOLID-ALUMINUM,..... GR1100-F,FLAT HEAD,1/8 IN. DIA,7/16 IN.LG,1/4 IN.GRIP LG	ABC	LB		*	*	*		*		
PA-FZ-Z	5320-550-2397	MS20615-5M6	96906 RIVET,SOLID-MONEL,UNIVERSAL.. HEAD,5/32 IN.DIA,3/8 IN.LG, 0.141 IN.GRIP LG	ABC	LB		*	*	*		*		
PA-FZ-Z	5320-550-4738	MS20427F6-7	96906 RIVET,SOLID-CRES,FLAT HEAD,.. 3/16 IN.DIA,7/16 IN.LG	ABC	LB		*	*	*		*		
PA-FZ-Z	5320-550-8896	NAS1468-8	80205 PIN,RIVET-STEEL ALLOY,CADMIUM PLATED,PAN HEAD,PROTRUDING HEAD,SWAGE LOCKING,CLOSE TOLERANCE,1/4 IN.DIA,0.812 IN.LG,0.470 IN.TO 0.531 IN. GRIP LG	ABC	EA		*	*	*		*		
PA-FZ-Z	5320-551-8000	NAS1080C6	80205 COLLAR,RIVET PIN-ALUMINUM,... 0.191 IN.ID,0.308 IN.OD, 0.124 IN.THK	ABC	EA		*	*	*		*		
PA-FZ-Z	5320-558-3085	NAS1446-7	80205 PIN,RIVET-STEEL,PAN HEAD,.... PROTRUDING HEAD,SWAGE LOCKING,CLOSE TOLERANCE, 3/16 IN.DIA,0.631 IN.LG, 0.376 IN.TO 0.438 IN. GRIP LG	ABC	EA		*	*	*		*		
PA-FZ-Z	5320-558-6164	NAS1436-5	80205 PIN,RIVET-STEEL,PAN HEAD,.... SWAGE LOCKING,CLOSE TOLERANCE,3/16 IN.DIA,0.506	ABC	EA		*	*	*		*		

(1) SMR CODE	(2) FEDERAL STOCK NUMBER	(3) DESCRIPTION REFERENCE NUMBER & MFR CODE		USABLE ON CODE	(4) UNIT OF MEAS	(5) QTY INC IN UNIT	(6) 8 DAY DS GS MAINT ALW (a) 1-20	(b) 21-50	(c) 51-100	(7) ITEM ALWPER 100 EQUIP CNTGCY	(8) DEPOT MAINT ALWPER 100 EQUIP	(9) ILLUSTRATION (a) FIG NO	(b) ITEM NO
		FUNCTIONAL GROUP - 60	BULK MATERIALS	CH-47									
			CONTINUED									BULK	
PA-FZ-Z	5320-558-8029	NAS1436-8	80205 PIN,RIVET-STEEL,PAN HEAD,.... SWAGE LOCKING,CLOSE TOLERANCE,3/16 IN.DIA,0.694 IN.LG,0.439 IN.TO 0.500 IN.GRIP LG	ABC	EA		*	*	*		*		
PA-FZ-Z	5320-576-9960	MS20600B6-9	96906 RIVET,BLIND-ALUMINUM ALLOY,... GR5056,PULL STEM, SELF-PLUGGING,PROTRUDING HEAD,3/16 IN.DIA,0.501 IN. TO 0.562 IN.GRIP LG	ABC	EA		*	*	*		*		
PA-FZ-Z	5320-579-1215	NAS528A6	80205 COLLAR,RIVET PIN-ALUMINUM.... ALLOY,ANODIZED,0.189 IN.ID, 0.284 IN.OD,0.210 IN.LG,FOR 3/16 IN.DIA HI-SHEAR RIVET	ABC	EA		*	*	*		*		
PA-FZ-Z	5320-579-6818	NAS1080D5	80205 COLLAR,RIVET PIN-ALUMINUM,... 0.164 IN.ID,0.280 IN.OD, 0.200 IN.LG	ABC	EA		*	*	*		*		
PA-FZ-Z	5320-582-3268	MS20600AD6W3	96906 RIVET,BLIND-ALUMINUM ALLOY,.. GR2117,PULL STEM, SELF-PLUGGING,PROTRUDING HEAD,3/16 IN.DIA,0.126 IN. TO 0.187 IN.GRIP LG, SERRATED STEM	ABC	EA		*	*	*		*		
PA-FZ-Z	5320-582-3272	MS20600B4W6	96906 RIVET,BLIND-ALUMINUM ALLOY,.. GR5056,PULL STEM, SELF-PLUGGING,PROTRUDING HEAD,1/8 IN.DIA,0.313 IN.TO 0.375 IN.GRIP LG,SERRATED STEM	ABC	EA		*	*	*		*		
PA-FZ-Z	5320-582-3273	MS20600B4W1	96906 RIVET,BLIND-ALUMINUM ALLOY,.. GR5056,PULL STEM, SELF-PLUGGING,PROTRUDING HEAD,1/8 IN.DIA,UP TO 0.062 IN.GRIP LG,SERRATED STEM	ABC	EA		*	*	*		*		
PA-FZ-Z	5320-582-3275	MS20601AD4W5	96906 RIVET,BLIND-ALUMINUM ALLOY,.. GR2117,PULL STEM, SELF-PLUGGING,FLAT HEAD, 1/8 IN.DIA,0.251 IN.TO 0.312 IN.GRIP LG, SERRATED STEM	ABC	EA		*	*	*		*		
PA-FZ-Z	5320-582-3276	MS20600AD6W4	96906 RIVET,BLIND-ALUMINUM ALLOY,.. GR2117,PULL STEM, SELF-PLUGGING,PROTRUDING HEAD,3/16 IN.DIA,0.188 IN. TO 0.250 IN.GRIP LG, SERRATED STEM	ABC	EA		*	*	*		*		
PA-FZ-Z	5320-582-3288	MS20600AD4W1	96906 RIVET,BLIND-ALUMINUM ALLOY,..	ABC	EA		*	*	*		*		

(1) SMR CODE	(2) FEDERAL STOCK NUMBER	(3) DESCRIPTION REFERENCE NUMBER & MFR CODE		USABLE ON CODE CH-47	(4) UNIT OF MEAS	(5) QTY INC IN UNIT	(6) 30-DAY DS/GS MAINT ALW (a) 1-20	(b) 21-50	(c) 51-100	(7) 1-YR ALWPER 100 EQUIP CNTGCY	(8) DEPOT MAINT ALWPER 100 EQUIP	(9) ILLUSTRATION (a) FIG NO	(b) ITEM NO
		FUNCTIONAL GROUP - 60 BULK MATERIALS										BULK	
		CONTINUED GR2117,PULL STEM, SELF-PLUGGING,PROTRUDING HEAD,1/8 IN.DIA,UP TO 0.062 IN.GRIP LG,SERRATED STEM											
PA-FZ-Z	5320-582-3289	MS20600AD5W3	96906 RIVET,BLIND-ALUMINUM ALLOY,... GR2117,PULL STEM, SELF-PLUGGING,PROTRUDING HEAD,5/32 IN.DIA,0.126 IN. TO 0.187 IN.GRIP LG, SERRATED STEM	ABC	EA		*	*	*		*		
PA-OZ-Z	5320-582-3298	MS20600B4W2	96906 RIVET,BLIND-ALUMINUM ALLOY,... GR5056,PULL STEM, SELF-PLUGGING,PROTRUDING HEAD,1/8 IN.DIA,0.063 IN.TO 0.125 IN.GRIP LENGTH, SERRATED STEM	ABC	EA		*	*	*		*		
PA-FZ-Z	5320-582-3301	MS20600AD6W5	96906 RIVET,BLIND-ALUMINUM ALLOY,... GR2117,PULL STEM, SELF-PLUGGING,PROTRUDING HEAD,3/16 IN.DIA,0.251 IN. TO 0.312 IN.GRIP LG, SERRATED STEM	ABC	EA		*	*	*		*		
PA-FZ-Z	5320-582-3302	MS20600AD5W2	96906 RIVET,BLIND-ALUMINUM ALLOY,... GR2117,PULL STEM, SELF-PLUGGING,PROTRUDING HEAD,5/32 IN.DIA,0.063 IN. TO 0.125 IN.GRIP LG, SERRATED STEM	ABC	EA		*	*	*		*		
PA-FZ-Z	5320-582-3303	MS20600AD4W5	96906 RIVET,BLIND-ALUMINUM ALLOY,... GR2117,PULL STEM, SELF-PLUGGING,PROTRUDING HEAD,1/8 IN.DIA,0.251 IN.TO 0.312 IN.GRIP LG,SERRATED STEM	ABC	EA		*	*	*		*		
PA-FZ-Z	5320-582-3304	MS20600AD4W2	96906 RIVET,BLIND-ALUMINUM ALLOY,... GR2117,PULL STEM, SELF-PLUGGING,PROTRUDING HEAD,1/8 IN.DIA,0.063 IN.TO 0.125 IN.GRIP LG,SERRATED STEM	ABC	EA		*	*	*		*		
PA-FZ-Z	5320-582-3305	MS20600AD4W3	96906 RIVET,BLIND-ALUMINUM ALLOY,... GR2117,PULL STEM, SELF-PLUGGING,PROTRUDING HEAD,1/8 IN.DIA,0.126 IN.TO 0.187 IN.GRIP LG,SERRATED STEM.	ABC	EA		*	*	*		*		
PA-FZ-Z	5320-582-3494	MS20600AD4W4	96906 RIVET,BLIND-ALUMINUM ALLOY,... GR2117,PULL STEM, SELF-PLUGGING,PROTRUDING	ABC	EA		*	*	*		*		

(1) SMR CODE	(2) FEDERAL STOCK NUMBER	(3) DESCRIPTION REFERENCE NUMBER & MFR CODE		USABLE ON CODE	(4) UNIT OF MEAS	(5) QTY INC IN UNIT	(6) 30-DAY DS/GS MAINT ALW (a) 1-20	(b) 21-50	(c) 51-100	(7) 1YR ALWPER 100 EQUIP CNTGCY	(8) DEPOT MAINT ALWPER 100 EQUIP	(9) ILLUSTRATION (a) FIG NO	(b) ITEM NO
		FUNCTIONAL GROUP - 60	BULK MATERIALS	CH-47									
			CONTINUED HEAD,1/8 IN.DIA,0.188 IN.TO 0.250 IN.GRIP LG,SERRATED STEM									BULK	
PA-FZ-Z	5320-582-3495	MS20600AD4W6	96906 RIVET,BLIND-ALUMINUM ALLOY,.. GR2117,PULL STEM, SELF-PLUGGING,PROTRUDING HEAD,1/8 IN.DIA,0.313 IN.TO 0.375 IN.GRIP LG, SERRATED STEM	ABC	EA		*	*	*		*		
PA-FZ-Z	5320-582-3496	MS20600AD5W4	96906 RIVET,BLIND-ALUMINUM ALLOY,.. GR2117,PULL STEM, SELF-PLUGGING,PROTRUDING HEAD,5/32 IN.DIA,0.188 IN. TO 0.250 IN.GRIP LG, SERRATED STEM	ABC	EA		*	*	*		*		
PA-FZ-Z	5320-582-3497	MS20600AD5W5	96906 RIVET,BLIND-ALUMINUM ALLOY,.. GR2117,PULL STEM, SELF-PLUGGING,PROTRUDING HEAD,5/32 IN.DIA,0.251 IN. TO 0.312 IN.GRIP LG, SERRATED STEM	ABC	EA		*	*	*		*		
PA-FZ-Z	5320-582-3498	MS20600AD5W6	96906 RIVET,BLIND-ALUMINUM ALLOY,.. GR2117,PULL STEM, SELF-PLUGGING,PROTRUDING HEAD,5/32 IN.DIA,0.313 IN. TO 0.375 IN.GRIP LG, SERRATED STEM	ABC	EA		*	*	*		*		
PA-FZ-Z	5320-582-3499	MS20600AD6W6	96906 RIVET,BLIND-ALUMINUM ALLOY,.. GR2117,PULL STEM, SELF-PLUGGING,PROTRUDING HEAD,3/16 IN.DIA,0.313 IN. TO 0.375 IN.GRIP LG, SERRATED STEM	ABC	EA		*	*	*		*		
PA-FZ-Z	5320-582-3501	MS20601AD4W2	96906 RIVET,BLIND-ALUMINUM ALLOY,.. GR2117,PULL STEM, SELF-PLUGGING,FLAT HEAD,1/8 IN.DIA,0.063 IN.TO 0.125 IN.GRIP LG,SERRATED STEM	ABC	EA		*	*	*		*		
PA-FZ-Z	5320-582-3502	MS20601AD4W4	96906 RIVET,BLIND-ALUMINUM ALLOY,.. GR2117,PULL STEM, SELF-PLUGGING,FLAT HEAD, 1/8 IN.DIA,0.188 IN.TO 0.250 IN.GRIP LG, SERRATED STEM	ABC	EA		*	*	*		*		
PA-FZ-Z	5320-582-3519	MS20600B5W3	96906 RIVET,BLIND-ALUMINUM ALLOY,.. GR5056,PULL STEM, SELF-PLUGGING,PROTRUDING HEAD,5/32 IN.DIA,0.126 IN. TO 0.187 IN.GRIP LG	ABC	EA		*	*	*		*		

(1) SMR CODE	(2) FEDERAL STOCK NUMBER	(3) DESCRIPTION REFERENCE NUMBER & MFR CODE		USABLE ON CODE CH-47	(4) UNIT OF MEAS	(5) QTY INC IN UNIT	(6) 30-DAY DS GS MAINT ALW (a) 1-20	(b) 21-50	(c) 51-100	(7) 1 YR ALWPER 100 EQUIP CNTGCY	(8) DEPOT MAINT ALWPER 100 EQUIP	(9) ILLUSTRATION (a) FIG NO	(b) ITEM NO
	FUNCTIONAL GROUP - 60	BULK MATERIALS										BULK	
		CONTINUED											
		SERRATED STEM											
PA-FZ-Z	5320-582-3520	MS20600B5W1	96906	RIVET,BLIND-ALUMINUM ALLOY,.. GR5056,PULL STEM, SELF-PLUGGING,PROTRUDING HEAD,5/32 IN.DIA,UP TO 0.062 IN.GRIP LG,SERRATED STEM	ABC	EA		*	*	*		*		
PB-FZ-Z	5320-582-3521	MS20600B4W3	96906	RIVET,BLIND-ALUMINUM ALLOY,.. GR5056,PULL STEM, SELF-PLUGGING,PROTRUDING HEAD,1/8 IN.DIA,0.126 IN.TO 0.187 IN.GRIP LG,SERRATED STEM	ABC	EA		*	*	*		*		
PA-FZ-Z	5320-582-3939	9SPBB5-7	29666	RIVET,BLIND.....	ABC	EA		*	*	*		*		
PA-FZ-Z	5320-584-0672	MS20426AD3-6	96906	RIVET,SOLID-ALUMINUM ALLOY,.. GR2117-T4,FLAT HEAD,3/32 IN.DIA,3/8 IN.LG,0.234 IN. GRIP LG	ABC	LB		*	*	*		*		
PA-FZ-Z	5320-584-1285	MS20600AD6W2	96906	RIVET,BLIND-ALUMINUM ALLOY,.. GR2117,PULL STEM, SELF-PLUGGING,PROTRUDING HEAD,3/16 IN.DIA,0.063 IN. TO 0.125 IN.GRIP LG, SERRATED STEM	ABC	EA		*	*	*		*		
PA-FZ-Z	5320-584-9078	MS20470A4-4	96906	RIVET,SOLID-ALUMINUM,GR1100.. UNIVERSAL HEAD,1/8 IN.DIA, 1/4 IN.LG,0.062 IN.GRIP LG	ABC	LB		*	*	*		*		
PA-OZ-Z	5320-613-8924	MS20470A3-16	96906	RIVET,SOLID-ALUMINUM,..... GR1100,UNIVERSAL HEAD, 3/32 IN.DIA,1 IN.LG, 0.859 IN.GRIP LG	ABC	LB		*	*	*		*		
PA-FZ-Z	5320-614-3584	NAS145B-7	80205	PIN,RIVET-STEEL ALLOY,CADMIUM PLATED,FLAT HEAD;SWAGE LOCKING,CLOSE TOLERANCE,1/4 IN.DIA,0.749 IN.LG,0.407 IN.TO 0.469 IN.GRIP LG	ABC	EA		*	*	*		*		
PA-FZ-Z	5320-616-4338	MS20600MP5W2	96906	RIVET,BLIND-MONEL,CADMIUM.... PLATED,PULL STEM, SELF-PLUGGING,PROTRUDING HEAD,5/32 IN.DIA,0.063 IN. TO 0.125 IN.GRIP LG, SERRATED STEM	ABC	EA		*	*	*		*		
PA-FZ-Z	5320-616-4344	MS20600B6W8	96906	RIVET,BLIND-ALUMINUM ALLOY,.. GR5056,PULL STEM, SELF-PLUGGING,PROTRUDING HEAD,3/16 IN.DIA,0.438 IN. TO 0.500 IN.GRIP LG, SERRATED STEM	ABC	EA		*	*	*		*		
PA-FZ-Z	5320-616-4345	MS20600B6W6	96906	RIVET,BLIND-ALUMINUM ALLOY,..	ABC	EA		*	*	*		*		

(1) SMR CODE	(2) FEDERAL STOCK NUMBER	(3) DESCRIPTION REFERENCE NUMBER & MFR CODE			USABLE ON CODE	(4) UNIT OF MEAS	(5) QTY INC IN UNIT	(6) 30-DAY DS/GS MAINT ALW (a) 1-20	(b) 21-50	(c) 51-100	(7) 1-YR ALWPER 100 EQUIP CNTGCY	(8) DEPOT MAINT ALWPER 100 EQUIP	(9) ILLUSTRATION (a) FIG NO	(b) ITEM NO
		FUNCTIONAL GROUP - 60	BULK MATERIALS		CH-47									
				CONTINUED									BULK	
				GR5056,PULL STEM, SELF-PLUGGING,PROTRUDING HEAD,3/16 IN.DIA,0.313 IN. TO 0.375 IN.GRIP LG, SERRATED STEM										
PA-FZ-Z	5320-616-4346	MS20600B6W4	96906	RIVET,BLIND-ALUMINUM ALLOY,..	ABC	EA		*	*	*		*		
				GR5056,PULL STEM, SELF-PLUGGING,PROTRUDING HEAD,3/16 IN.DIA,0.188 IN. TO 0.250 IN.GRIP LG, SERRATED STEM										
PA-FZ-Z	5320-616-4347	MS20600B5W7	96906	RIVET,BLIND-ALUMINUM ALLOY,..	ABC	EA		*	*	*		*		
				GR5056,PULL STEM, SELF-PLUGGING,PROTRUDING HEAD,5/32 IN.DIA,0.376 IN. TO 0.437 IN.GRIP LG, SERRATED STEM										
PA-FZ-Z	5320-616-4349	MS20600AD6W8	96906	RIVET,BLIND-ALUMINUM ALLOY,..	ABC	EA		*	*	*		*		
				GR2117,PULL STEM, SELF-PLUGGING,PROTRUDING HEAD,3/16 IN.DIA,0.438 IN.TO 0.500 IN.GRIP LG, SERRATED STEM										
PA-FZ-Z	5320-616-4350	MS20600AD6W1	96906	RIVET,BLIND-ALUMINUM ALLOY,..	ABC	EA		*	*	*		*		
				GR2117,PULL STEM, SELF-PLUGGING,PROTRUDING HEAD,3/16 IN.DIA,UP TO 0.062 IN.GRIP LG, SERRATED STEM										
PA-FZ-Z	5320-616-4351	MS20600AD5W7	96906	RIVET,BLIND-ALUMINUM ALLOY,..	ABC	EA		*	*	*		*		
				GR2117,PULL STEM, SELF-PLUGGING,PROTRUDING HEAD,5/32 IN.DIA,0.376 IN. TO 0.437 IN.GRIP LG, SERRATED STEM										
PA-FZ-Z	5320-616-4352	RV200-5-1	98996	RIVET,BLIND.....	ABC	EA		*	*	*		*		
PA-FZ-Z	5320-616-4353	MS20600B6W2	96906	RIVET,BLIND-ALUMINUM ALLOY,..	ABC	EA		*	*	*		*		
				GR5056,PULL STEM, SELF-PLUGGING,PROTRUDING HEAD,3/16 IN.DIA,0.063 IN. TO 0.125 IN.GRIP LG, SERRATED STEM										
PA-FZ-Z	5320-616-5546	MS20600B6W1	96906	RIVET,BLIND-ALUMINUM ALLOY,..	ABC	EA		*	*	*		*		
				GR5056,PULL STEM, SELF-PLUGGING,PROTRUDING HEAD,3/16 IN.DIA,UP TO 0.062 IN.GRIP LG, SERRATED STEM										
PA-FZ-Z	5320-619-0157	NAS1466-6	80205	PIN,RIVET-STEEL ALLOY,CADMIUM	ABC	EA		*	*	*		*		

(1) SMR CODE	(2) FEDERAL STOCK NUMBER	(3) DESCRIPTION REFERENCE NUMBER & MFR CODE		USABLE ON CODE CH-47	(4) UNIT OF MEAS	(5) QTY INC IN UNIT	(6) 30-DAY DS/GS MAINT ALW (a) 1-20	(b) 21-50	(c) 51-100	(7) 1-YR ALWPER 100 EQUIP CNTGCY	(8) DEPOT MAINT ALWPER 100 EQUIP	(9) ILLUSTRATION (a) FIG NO	(b) ITEM NO
		FUNCTIONAL GROUP - 60 BULK MATERIALS										BULK	
			CONTINUED PLATED,PAN HEAD,PROTRUDING HEAD,SWAGE LOCKING,CLOSE TOLERANCE,3/16 IN.DIA,0.608 IN.LG,0.345 IN.TO 0.406 IN. GRIP LG										
PA-FZ-Z	5320-619-0498	MS20426A4-4	96906 RIVET,SOLID-ALUMINUM,..... GR1100-F,FLAT HEAD,1/8 IN.DIA,1/4 IN.LG,0.062 IN. GRIP LG	ABC	LB		*	*	*		*		
PA-DZ-Z	5320-619-0917	MS20470A3-9	96906 RIVET,SOLID-ALUMINUM,GR1100,. UNIVERSAL HEAD,3/32 IN.DIA, 9/16 IN.LG,0.422 IN.GRIP LG	ABC	LB						*		
PA-FZ-Z	5320-619-4028	MS20426A4-5	96906 RIVET,SOLID-ALUMINUM,..... GR1100-F,FLAT HEAD,1/8 IN.DIA,5/16 IN.LG,0.125 IN. GRIP LG	ABC	LB		*	*	*		*		
PA-FZ-Z	5320-619-4039	MS20470AD5-5	96906 RIVET,SOLID-ALUMINUM ALLOY,.. GR2117,UNIVERSAL HEAD, 5/32 IN.DIA,5/16 IN.LG, 0.079 IN.GRIP LG	ABC	LB		*	*	*		*		
PA-OZ-Z	5320-619-4091	MS20426AD4-16	96906 RIVET,SOLID-ALUMINUM ALLOY,.. GR2117-T4,FLAT HEAD, 1/8 IN.DIA,1 IN.LG, 0.812 IN.GRIP LG	ABC	LB		*	*	*		*		
PA-FZ-Z	5320-619-4099	MS20426AD3-10	96906 RIVET,SOLID-ALUMINUM ALLOY,.. GR2117-T4,FLAT HEAD,3/32 IN.DIA,5/8 IN.LG,0.484 IN.GRIP LG	ABC	LB		*	*	*		*		
PA-FZ-Z	5320-630-5713	NAS1468-6	80205 PIN,RIVET-STEEL ALLOY,PAN.... HEAD,PROTRUDING HEAD,SWAGE LOCKING,CLOSE TOLERANCE, 1/4 IN.DIA,0.687 IN.LG	ABC	EA		*	*	*		*		
PA-FZ-Z	5320-630-5715	NAS1468-3	80205 PIN,RIVET-STEEL,PAN HEAD,.... PROTRUDING HEAD,SWAGE LOCKING,CLOSE TOLERANCE,1/4 IN.DIA,0.499 IN.LG,0.157 IN.TO 0.219 IN.GRIP LG	ABC	EA		*	*	*		*		
PA-FZ-Z	5320-630-5716	NAS1468-4	80205 PIN,RIVET-STEEL,PAN HEAD,.... PROTRUDING HEAD,SWAGE LOCKING,CLOSE TOLERANCE,1/4 IN.DIA,0.562 IN.LG,0.220 IN.TO 0.281 IN.GRIP LG	ABC	EA		*	*	*		*		
PA-FZ-Z	5320-630-5717	NAS1466-2	80205 PIN,RIVET-STEEL ALLOY,CADMIUM PLATED,PAN HEAD,PROTRUDING HEAD,SWAGE LOCKING,CLOSE TOLERANCE,3/16 IN.DIA,0.358 IN.LG,0.095 IN.TO 0.156 IN. GRIP LG	ABC	EA		*	*	*		*		
PA-FZ-Z	5320-631-3440	NAS1525-3	80205 PIN,RIVET-ALUMINUM ALLOY,....	ABC	EA		*	*	*		*		

(1) SMR CODE	(2) FEDERAL STOCK NUMBER	(3) DESCRIPTION REFERENCE NUMBER & MFR CODE			USABLE ON CODE	(4) UNIT OF MEAS	(5) QTY INC IN UNIT	(6) 30-DAY DS/GS MAINT ALW (a) 1-20	(b) 21-50	(c) 51-100	(7) 1 YR ALWPER FOR EQUIP CNTGCY	(8) DEPOT MAINT ALWPER FOR EQUIP	(9) ILLUSTRATION (a) FIG NO	(b) ITEM NO
		FUNCTIONAL GROUP - 60	BULK MATERIALS		CH-47									
				CONTINUED PAN HEAD,PROTRUDING HEAD, SWAGE LOCKING,CLOSE TOLERANCE,5/32 IN.DIA, 0.376 IN.LG									BULK	
PA-FZ-Z	5320-637-5006	MS20600B6W11	96906	RIVET,BLIND-ALUMINUM ALLOY,.. GR5056,PULL STEM, SELF-PLUGGING,PROTRUDING HEAD,3/16 IN.DIA,0.626 IN. TO 0.687 IN.GRIP LG, SERRATED STEM	ABC	EA		*	*	*		*		
PA-FZ-Z	5320-637-5014	MS20600B6W12	96906	RIVET,BLIND-ALUMINUM ALLOY,.. GR5056,PULL STEM, SELF-PLUGGING,PROTRUDING HEAD,3/16 IN.DIA,0.688 IN. TO 0.750 IN.GRIP LG, SERRATED STEM	ABC	EA		*	*	*		*		
PA-FZ-Z	5320-637-6158	ALSFT6-10	29666	PIN,RIVET.....	ABC	EA		*	*	*		*		
PA-FZ-Z	5320-638-8619	MS20426A4-8	96906	RIVET,SOLID-ALUMINUM..... GR1100-F,FLAT HEAD,1/8 IN.DIA,1/2 IN.LG,0.312 IN.GRIP LG	ABC	LB		*	*	*		*		
PA-FZ-Z	5320-655-4757	MS20426A3-4	96906	RIVET,SOLID-ALUMINUM ALLOY,.. GR1100-F,FLAT HEAD, 3/32 IN.DIA,1/4 IN.LG, 0.109 IN.GRIP LG	ABC	LB		*	*	*		*		
PA-FZ-Z	5320-660-0763	NAS1525-2	80205	PIN,RIVET-ALUMINUM ALLOY,.... PAN HEAD,PROTRUDING HEAD, SWAGE LOCKING,CLOSE TOLERANCE,5/32 IN.DIA, 0.313 IN.LG,0.095 IN.TO 0.156 IN.GRIP LG	ABC	EA		*	*	*		*		
PA-DZ-Z	5320-660-0993	MS20470A3-10	96906	RIVET,SOLID-ALUMINUM..... GR1100,UNIVERSAL HEAD, 3/32 IN.DIA,5/8 IN.LG, 0.484 IN.GRIP LG	ABC	LB						*		
PA-FZ-Z	5320-660-1094	MS20426A2-4	96906	RIVET,SOLID-ALUMINUM ALLOY... GR2117-T4,FLAT HEAD, 1/16 IN.DIA,1/4 IN.LG, 0.156 IN.GRIP LG	ABC	LB		*	*	*		*		
PB-FZ-Z	5320-680-3598	NAS1466-5	80205	PIN,RIVET-STEEL,PAN HEAD..... PROTRUDING HEAD,SWAGE LOCKING,CLOSE TOLERANCE, 3/16 IN.DIA,0.546 IN.LG, 0.282 IN.TO 0.344 IN. GRIP LG	ABC	EA		*	*	*		*		
PA-FZ-Z	5320-680-4200	NAS1468-20	80205	PIN,RIVET-STEEL,PAN HEAD..... PROTRUDING HEAD,SWAGE LOCKING,CLOSE TOLERANCE, 1/4 IN.DIA,1.562 IN.LG	ABC	EA		*	*	*		*		
PA-FZ-Z	5320-680-4201	NAS1468-30	80205	PIN,RIVET-STEEL,PAN HEAD,.....	ABC	EA		*	*	*		*		

(1) SMR CODE	(2) FEDERAL STOCK NUMBER	(3) DESCRIPTION REFERENCE NUMBER & MFR CODE		USABLE ON CODE CH-47	(4) UNIT OF MEAS	(5) QTY INC IN UNIT	(6) 30-DAY DS/GS MAINT ALW (a) 1-20	(b) 21-50	(c) 51-100	(7) 1-YR ALWPER 100 EQUIP CNTGCY	(8) DEPOT MAINT ALWPER 100 EQUIP	(9) ILLUSTRATION (a) FIG NO	(b) ITEM NO
		FUNCTIONAL GROUP - 60	BULK MATERIALS									BULK	
			CONTINUED PROTRUDING HEAD,SWAGE LOCKING,CLOSE TOLERANCE, 1/4 IN.DIA,2.187 IN.LG, 1.845 IN.TO 1.906 IN. GRIP LG										
PA-FZ-Z	5320-680-4434	NAS1456-3	80205 PIN,RIVET-STEEL,FLAT..... COUNTERSUNK HEAD,SWAGE LOCKING,CLOSE TOLERANCE, 3/16 IN.DIA,0.421 IN.LG, 0.157 IN.TO 0.219 IN. GRIP LG	ABC	EA		*	*	*		*		
PA-FZ-Z	5320-680-4456	NAS1466-9	80205 PIN,RIVET-STEEL ALLOY,CADMIUM PLATED,PAN HEAD,PROTRUDING HEAD,SWAGE LOCKING,CLOSE TOLERANCE,3/16 IN.DIA,0.796 IN.LG,0.532 IN.TO 0.594 IN. GRIP LG	ABC	EA		*	*	*		*		
C PA-FZ-Z	5320-682-1749	MS20470D5-8	96906 RIVET,SOLID-ALUMINUM ALLOY,.. GR2017,UNIVERSAL HEAD,5/32 IN.DIA,1/2 IN.LG,0.266 IN. GRIP LG	ABC	LB		*	*	*		*		
PA-FZ-Z	5320-684-9524	NAS1458-8	80205 PIN,RIVET-STEEL,FLAT..... COUNTERSUNK HEAD,SWAGE LOCKING,CLOSE TOLERANCE, 1/4 IN.DIA,0.812 IN.LG, 0.470 IN.TO 0.500 IN. GRIP LG	ABC	EA		*	*	*		*		
PA-OZ-Z	5320-684-9658	MS20615-6M4	96906 RIVET,SOLID-MONEL,UNIVERSAL.. HEAD,3/16 IN.DIA,1/4 IN.LG	ABC	LB		*	*	*		*		
PA-FZ-Z	5320-684-9909	MS20615-4M8	96906 RIVET,SOLID-MONEL,UNIVERSAL.. HEAD,1/8 IN.DIA,1/2 IN.LG, 0.312 IN.GRIP LG	ABC	LB		*	*	*		*		
PA-OZ-Z	5320-684-9910	MS20615-4M4	96906 RIVET,SOLID-MONEL,UNIVERSAL.. HEAD,1/8 IN.DIA,1/4 IN.LG, 0.062 IN.GRIP LG	ABC	LB		*	*	*		*		
PA-FZ-Z	5320-684-9911	MS20615-4M5	96906 RIVET,SOLID-MONEL,UNIVERSAL.. HEAD,1/8 IN.DIA,5/16 IN.LG, 0.125 IN.GRIP LG	ABC	LB		*	*	*		*		
PA-FZ-Z	5320-685-0821	MS20615-5M5	96906 RIVET,SOLID-MONEL,UNIVERSAL.. HEAD,5/32 IN.DIA,5/16 IN. LG,0.079 IN.GRIP LG	ABC	LB		*	*	*		*		
C PA-FZ-Z	5320-686-2137	BACB30CG6-10	81205 PIN,RIVET..... CADMIUM PLATED,PAN HEAD, 0.327 IN.DIA,2-7/16 IN.LG, 0.625 IN.GRIP LG	ABC	EA		*	*	*		*		
C PA-FZ-Z	5320-686-2138	BACB30CG6-6	81205 PIN,RIVET-STEEL,PAN HEAD,.... 3/16 IN.DIA,1.94 IN.LG, 3/8 IN.GRIP LG	ABC	EA		*	*	*		*		
C PA-FZ-Z	5320-687-3175	NAS1458-6	80205 PIN,RIVET-STEEL,FLAT.....	ABC	EA		*	*	*		*		

(1) SMR CODE	(2) FEDERAL STOCK NUMBER	(3) DESCRIPTION REFERENCE NUMBER & MFR CODE		USABLE ON CODE	(4) UNIT OF MEAS	(5) QTY INC IN UNIT	(6) 30-DAY DS GS MAINT ALW a. 1-20	b. 21-50	c. 51-100	(7) 1 YR ALWPER OF EQUIP	(8) DEPOT MAINT ALWPER OF EQUIP	(9) ILLUSTRATION a. FIG NO	b. ITEM NO
		FUNCTIONAL GROUP - 60	BULK MATERIALS	CH-47									
			CONTINUED									BULK	
			COUNTERSUNK HEAD,SWAGE LOCKING,CLOSE TOLERANCE, 1/4 IN.DIA,0.687 IN.LG, 0.345 IN.TO 0.406 IN. GRIP LG										
PA-FZ-Z	5320-687-3531	MS20426D4-5	96906 RIVET,SOLID-ALUMINUM ALLOY,.. GR2017-T4,FLAT HEAD, 1/8 IN.DIA,5/16 IN.LG, 0.125 IN.GRIP LG	ABC	LB		*	*	*		*		
PA-FZ-Z	5320-687-5162	NAS1470-6	80205 PIN,RIVET-STEEL,PAN HEAD,.... PROTRUDING HEAD,SWAGE LOCKING,CLOSE TOLERANCE, 5/16 IN.DIA,0.815 IN.LG	ABC	EA		*	*	*		*		
PA-FZ-Z	5320-687-5163	NAS1470-19	80205 PIN,RIVET-STEEL ALLOY,CADMIUM PLATED,PAN HEAD,PROTRUDING HEAD,SWAGE LOCKING,CLOSE TOLERANCE,5/16 IN.DIA,1.627 IN.LG,1.157 IN.TO 1.219 IN. GRIP LG	ABC	EA		*	*	*		*		
XB-FZ-Z		NAS1470-2	80205 PIN,RIVET-STEEL ALLOY,CADMIUM PLATED,PAN HEAD,PROTRUDING HEAD,SWAGE LOCKING,CLOSE TOLERANCE,5/16 IN.DIA,0.565 IN.LG,0.095 IN.TO 0.156 IN. GRIP LG	ABC	EA								
PA-FZ-Z	5320-687-5165	NAS1470-20	80205 PIN,RIVET-ALLOY STEEL..... PAN HEAD,PROTRUDING HEAD, CLOSE TOLERANCE,5/16 IN. DIA,1-1/4 IN.LG,1.281 IN.GRIP LG	ABC	EA		*	*	*		*		
PA-FZ-Z	5320-687-5167	NAS1470-15	80205 PIN,RIVET-STEEL ALLOY,CADMIUM PLATED,PAN HEAD,PROTRUDING HEAD,SWAGE LOCKING,CLOSE TOLERANCE,5/16 IN.DIA,1.377 IN.LG,0.907 IN.TO 0.969 IN. GRIP LG	ABC	EA		*	*	*		*		
PA-FZ-Z	5320-687-5168	NAS1456-13	80205 PIN,RIVET.....	ABC	EA								
XB-FZ-Z		NAS1470-16	80205 PIN,RIVET-STEEL ALLOY,CADMIUM PLATED,PAN HEAD,PROTRUDING HEAD,SWAGE LOCKING,CLOSE TOLERANCE,5/16 IN.DIA,1.440 IN.LG,0.970 IN.TO 1.031 IN. GRIP LG	ABC	EA		*	*	*		*		
PA-FZ-Z	5320-687-5204	NAS1470-9	80205 PIN,RIVET-STEEL,PAN HEAD,.... PROTRUDING HEAD,SWAGE LOCKING,CLOSE TOLERANCE, 0.535 IN.DIA,2.690 IN.LG	ABC	EA		*	*	*		*		
PA-FZ-Z	5320-687-5205	NAS1472-4	80205 PIN,RIVET-STEEL ALLOY,CADMIUM PLATED,PAN HEAD,PROTRUDING	ABC	EA		*	*	*		*		

(1) SMR CODE	(2) FEDERAL STOCK NUMBER	(3) DESCRIPTION REFERENCE NUMBER & MFR CODE		USABLE ON CODE CH-47	(4) UNIT OF MEAS	(5) QTY INC IN UNIT	(6) 30-DAY DS/GS MAINT ALW (a) 1-20	(b) 21-50	(c) 51-100	(7) 1-YR ALWPER 100 EQUIP CNTGCY	(8) DEPOT MAINT ALWPER 100 EQUIP	(9) ILLUSTRATION (a) FIG NO	(b) ITEM NO
		FUNCTIONAL GROUP - 60	BULK MATERIALS									BULK	
			CONTINUED HEAD,SWAGE LOCKING,CLOSE TOLERANCE,3/8 IN.DIA,0.797 IN.LG,0.220 IN.TO 0.281 IN. GRIP LG										
PA-FZ-Z	5320-687-5257	NAS1472-5	80205 PIN,RIVET-STEEL ALLOY,CADMIUM PLATED,PAN HEAD,PROTRUDING HEAD,SWAGE LOCKING,CLOSE TOLERANCE,3/8 IN.DIA,0.859 IN.LG,0.282 IN.TO 0.344 IN. GRIP LG	ABC	EA		*	*	*		*		
PA-FZ-Z	5320-687-5258	NAS1470-7	80205 PIN,RIVET-STEEL,PAN HEAD,.... PROTRUDING HEAD,CLOSE TOLERANCE,SWAGE LOCKING, 0.626 IN.LG,7/16 IN.GRIP LG	ABC	EA		*	*	*		*		
PA-FZ-Z	5320-687-5260	NAS1470-8	80205 PIN,RIVET-STEEL ALLOY,CADMIUM PLATED,PAN HEAD,PROTRUDING HEAD,SWAGE LOCKING,CLOSE TOLERANCE,5/16 IN.DIA,0.940 IN.LG,0.470 IN.TO 0.531 IN. GRIP LG	ABC	EA		*	*	*		*		
PA-FZ-Z	5320-687-5402	NAS1080P12	80205 COLLAR,RIVET PIN-ALUMINUM.... GR2024-T4,0.372 IN.ID, 0.637 IN.OD,0.540 IN.LG	ABC	EA		*	*	*		*		
PA-FZ-Z	5320-687-5536	NAS1472-10	80205 PIN,RIVET-STEEL,PAN HEAD,.... PROTRUDING HEAD,SWAGE LOCKING,CLOSE TOLERANCE, 3/8 IN.DIA,1.172 IN.LG	ABC	EA		*	*	*		*		
PA-FZ-Z	5320-687-5537	NAS1472-11	80205 PIN,RIVET-STEEL,PAN HEAD,.... PROTRUDING HEAD,SWAGE LOCKING,CLOSE TOLERANCE, 3/8 IN.DIA,1.234 IN.LG	ABC	EA		*	*	*		*		
PA-FZ-Z	5320-687-5538	NAS1472-8	80205 PIN,RIVET-STEEL,PAN HEAD,.... PROTRUDING HEAD,SWAGE LOCKING,CLOSE TOLERANCE, 3/8 IN.DIA,1.047 IN.LG	ABC	EA		*	*	*		*		
PA-FZ-Z	5320-687-5539	NAS1472-9	80205 PIN,RIVET-STEEL,PAN HEAD,.... PROTRUDING HEAD,SWAGE LOCKING,CLOSE TOLERANCE, 3/8 IN.DIA,1.109 IN.LG	ABC	EA		*	*	*		*		
PA-FZ-Z	5320-687-5540	NAS1468-13	80205 PIN,RIVET-STEEL,PAN HEAD,.... PROTRUDING HEAD,SWAGE LOCKING,CLOSE TOLERANCE, 1/4 IN.DIA,1.142 IN.LG, 0.782 IN.TO 0.844 IN. GRIP LG	ABC	EA		*	*	*		*		
XB-FZ-Z		NAS1470-3	80205 PIN,RIVET-STEEL,PAN HEAD,.... PROTRUDING HEAD,SWAGE LOCKING,CLOSE TOLERANCE, 5/16 IN.DIA,0.627 IN.LG	ABC	EA								
PA-FZ-Z	5320-687-9587	NAS1470-4	80205 PIN,RIVET-STEEL,PAN HEAD,....	ABC	EA		*	*	*		*		

(1) SMR CODE	(2) FEDERAL STOCK NUMBER	(3) DESCRIPTION REFERENCE NUMBER & MFR CODE		USABLE ON CODE	(4) UNIT OF MEAS	(5) QTY INC IN UNIT	(6) 30-DAY DS GS MAINT ALW 1-20	21-50	51-100	(7) ALWPER	(8) DEPOT MAINT	(9) ILLUSTRATION FIG NO	ITEM NO
		FUNCTIONAL GROUP - 60 BULK MATERIALS		CH-47									
			CONTINUED									BULK	
			PROTRUDING HEAD,SWAGE LOCKING,CLOSE TOLERANCE, 5/16 IN.DIA,0.690 IN.LG										
PA-FZ-Z	5320-687-9611	NAS1470-17	80205 PIN,RIVET-STEEL,PAN HEAD,.... PROTRUDING HEAD,SWAGE LOCKING,CLOSE TOLERANCE, 5/16 IN.DIA,1.502 IN.LG	ABC	EA		*	*	*		*		
PA-FZ-Z	5320-687-9668	NAS1470-12	80205 PIN,RIVET-STEEL,PAN HEAD,.... PROTRUDING HEAD,SWAGE LOCKING,CLOSE TOLERANCE, 5/16 IN.DIA,1.190 IN.LG, 0.720 IN.TO 0.781 IN. GRIP LG	ABC	EA		*	*	*		*		
PA-FZ-Z	5320-687-9669	NAS1470-13	80205 PIN,RIVET-STEEL ALLOY,PAN.... HEAD,PROTRUDING HEAD,SWAGE LOCKING,CLOSE TOLERANCE, 5/16 IN.DIA,1.252 IN.LG, 0.782 IN.TO 0.844 IN.GRIP LG	ABC	EA		*	*	*		*		
PA-FZ-Z	5320-687-9670	NAS1470-18	80205 PIN,RIVET-STEEL,PAN HEAD,.... PROTRUDING HEAD,SWAGE LOCKING,CLOSE TOLERANCE, 5/16 IN.DIA,1.565 IN.LG, 1.095 IN.TO 1.156 IN. GRIP LG	ABC	EA		*	*	*		*		
PA-FZ-Z	5320-687-9671	NAS1470-11	80205 PIN,RIVET-STEEL,PAN HEAD,.... PROTRUDING HEAD,SWAGE LOCKING,CLOSE TOLERANCE, 5/16 IN.DIA,1.127 IN.LG	ABC	EA		*	*	*		*		
PA-FZ-Z	5320-687-9672	NAS1470-10	80205 PIN,RIVET-STEEL ALLOY,CADMIUM PLATED,PAN HEAD,PROTRUDING HEAD,SWAGE LOCKING,CLOSE TOLERANCE,5/16 IN.DIA,1.065 IN.LG,0.595 IN.TO 0.656 IN. GRIP LG	ABC	EA		*	*	*		*		
PA-FZ-Z	5320-687-9674	NAS1472-12	80205 PIN,RIVET-STEEL,PAN HEAD,.... PROTRUDING HEAD,SWAGE LOCKING,CLOSE TOLERANCE,3/8 IN.DIA,1.297 IN.LG	ABC	EA		*	*	*		*		
XB-FZ-Z		NAS1472-17	80205 PIN,RIVET-STEEL,PAN HEAD,.... PROTRUDING HEAD,SWAGE LOCKING,CLOSE TOLERANCE,3/8 IN.DIA,1.609 IN.LG	ABC	EA								
PA-FZ-Z	5320-687-9677	NAS1472-2	80205 PIN,RIVET-STEEL,PAN HEAD,.... PROTRUDING HEAD,SWAGE LOCKING,CLOSE TOLERANCE,3/8 IN.DIA,0.672 IN.LG	ABC	EA		*	*	*		*		
XB-FZ-Z		NAS1472-20	80205 PIN,RIVET-STEEL,PAN HEAD,.... PROTRUDING HEAD,SWAGE	ABC	EA								

(1) SMR CODE	(2) FEDERAL STOCK NUMBER	(3) DESCRIPTION REFERENCE NUMBER & MFR CODE		USABLE ON CODE CH-47	(4) UNIT OF MEAS	(5) QTY INC IN UNIT	(6) 30-DAY DS/GS MAINT ALW (a) 1-20	(b) 21-50	(c) 51-100	(7) 1-YR ALWPER 100 EQUIP CNTGCY	(8) DEPOT MAINT ALWPER 100 EQUIP	(9) ILLUSTRATION (a) FIG NO	(b) ITEM NO
		FUNCTIONAL GROUP - 60 BULK MATERIALS										BULK	
			CONTINUED										
			LOCKING,CLOSE TOLERANCE,3/8 IN.DIA,1.797 IN.LG										
PA-FZ-Z	5320-687-9679	NAS1472-7	80205 PIN,RIVET-STEEL,PAN HEAD,.... PROTRUDING HEAD,SWAGE LOCKING,CLOSE TOLERANCE,3/8 IN.DIA,0.984 IN.LG	ABC	EA		*	*	*		*		
PA-FZ-Z	5320-687-9680	NAS1472-6	80205 PIN,RIVET-STEEL,PAN HEAD,.... PROTRUDING HEAD,SWAGE LOCKING,CLOSE TOLERANCE,3/8 IN.DIA,0.922 IN.LG	ABC	EA		*	*	*		*		
PA-FZ-Z	5320-687-9681	NAS1468-14	80205 PIN,RIVET-STEEL ALLOY,CADMIUM PLATED,PAN HEAD,PROTRUDING HEAD,SWAGE LOCKING,CLOSE TOLERANCE,1/4 IN.DIA,1.187 IN.LG,0.845 IN.TO 0.906 IN. GRIP LG	ABC	EA		*	*	*		*		
PA-FZ-Z	5320-687-9682	NAS1468-11	80205 PIN,RIVET-STEEL ALLOY,CADMIUM PLATED,PAN HEAD,PROTRUDING HEAD,SWAGE LOCKING,CLOSE TOLERANCE,1/4 IN.DIA,0.999 IN.LG,0.657 IN.TO 0.719 IN. GRIP LG	ABC	EA		*	*	*		*		
PB-FZ-Z	5320-687-9948	BACB30CC6-4	81205 RIVET,BLIND-STEEL,..... MECHANICALLY EXPANDED TYPE, SMALL PAN HEAD, SELF-PLUGGING SHANK,3/16 IN.DIA,1.016 IN.LG	ABC	EA		*	*	*		*		
PA-FZ-Z	5320-702-1899	NAS1470-14	80205 PIN,RIVET-STEEL,PAN HEAD,.... PROTRUDING HEAD,SWAGE LOCKING,CLOSE TOLERANCE, 5/16 IN.DIA,1.315 IN.LG, 0.845 IN.TO 0.906 IN. GRIP LG	ABC	EA		*	*	*		*		
PA-FZ-Z	5320-702-1901	NAS1470-5	80205 PIN,RIVET-STEEL,PAN HEAD,.... PROTRUDING HEAD,SWAGE LOCKING,CLOSE TOLERANCE, 5/16 IN.DIA,0.752 IN.LG	ABC	EA	1	*	*	*		*		
PA-FZ-Z	5320-702-2235	NAS1458-17	80205 PIN,RIVET-STEEL,FLAT..... COUNTERSUNK HEAD,SWAGE LOCKING,CLOSE TOLERANCE, 1/4 IN.DIA,1.374 IN.LG, 1.032 IN.TO 1.094 IN. GRIP LG	ABC	EA		*	*	*		*		
PA-FZ-Z	5320-702-2379	NAS1468-18	80205 PIN,RIVET-STEEL,PAN HEAD,.... PROTRUDING HEAD,SWAGE LOCKING,CLOSE TOLERANCE, 1/4 IN.DIA,1.437 IN.LG	ABC	EA	1	*	*	*		*		
PA-FZ-Z	5320-702-2380	NAS1468-2	80205 PIN,RIVET-STEEL,PAN HEAD,.... PROTRUDING HEAD,SWAGE	ABC	EA	1	*	*	*		*		

(1) SMR CODE	(2) FEDERAL STOCK NUMBER	(3) DESCRIPTION REFERENCE NUMBER & MFR CODE		USABLE ON CODE	(4) UNIT OF MEAS	(5) QTY INC IN UNIT	(6) 30-DAY DS/GS MAINT ALW (a) 1-20	(b) 21-50	(c) 51-100	(7) 1 YR ALWPER	(8) DEPOT MAINT ALWPER	(9) ILLUSTRATION FIG NO	ITEM NO
		FUNCTIONAL GROUP - 60	BULK MATERIALS	CH-47									
			CONTINUED LOCKING,CLOSE TOLERANCE, 1/4 IN.DIA,0.437 IN.LG									BULK	
C XD-FZ-Z		NAS1468-21	80205 PIN,RIVET-STEEL,PAN HEAD,.... PROTRUDING HEAD,SWAGE LOCKING,CLOSE TOLERANCE, 1/4 IN.DIA,1.624 IN.LG	ABC	EA	1							
PA-FZ-Z	5320-702-2423	NAS1456-14	80205 PIN,RIVET-STEEL,FLAT..... COUNTERSUNK HEAD,SWAGE LOCKING,CLOSE TOLERANCE, 3/16 IN.DIA,1.108 IN.LG, 0.845 IN.TO 0.906 IN. GRIP LG	ABC	EA		*	*	*		*		
PA-FZ-Z	5320-702-2837	NAS1456-10	80205 PIN,RIVET-STEEL,FLAT..... COUNTERSUNK HEAD,SWAGE LOCKING,CLOSE TOLERANCE, 3/16 IN.DIA,0.858 IN.LG, 0.595 IN.TO 0.656 IN. GRIP LG	ABC	EA		*	*	*		*		
PA-FZ-Z	5320-702-2896	NAS1468-19	80205 PIN,RIVET-STEEL,PAN HEAD,.... PROTRUDING HEAD,SWAGE LOCKING,CLOSE TOLERANCE, 1/4 IN.DIA,1.499 IN.LG	ABC	EA	1	*	*	*		*		
PA-FZ-Z	5320-702-2901	NAS1468-16	80205 PIN,RIVET-STEEL,PAN HEAD,.... PROTRUDING HEAD,SWAGE LOCKING,CLOSE TOLERANCE, 1/4 IN.DIA,1.312 IN.LG	ABC	EA	1	*	*	*		*		
PA-FZ-Z	5320-702-2902	NAS1468-17	80205 PIN,RIVET-STEEL,PROTRUDING... HEAD,SWAGE LOCKING,CLOSE TOLERANCE,1/4 IN.DIA,1.374 IN.LG	ABC	EA		*	*	*		*		
PA-FZ-Z	5320-702-3217	NAS1466-18	80205 PIN,RIVET-STEEL,PAN HEAD,.... PROTRUDING HEAD,SWAGE LOCKING,CLOSE TOLERANCE, 3/16 IN.DIA,1.358 IN.LG 1.095 IN.TO 1.156 IN. GRIP LG	ABC	EA		*	*	*		*		
PA-FZ-Z	5320-702-3221	NAS1466-14	80205 PIN,RIVET-STEEL,PAN HEAD,.... PROTRUDING HEAD,SWAGE LOCKING,CLOSE TOLERANCE, 3/16 IN.DIA,1.108 IN.LG, 0.845 IN.TO 0.906 IN.GRIP LG	ABC	EA		*	*	*		*		
PA-FZ-Z	5320-702-3222	NAS1466-13	80205 PIN,RIVET-STEEL,PAN HEAD,.... PROTRUDING HEAD,SWAGE LOCKING,CLOSE TOLERANCE, 3/16 IN.DIA,1.046 IN.LG	ABC	EA	1	*	*	*		*		
PA-FZ-Z	5320-702-3223	NAS1466-12	80205 PIN,RIVET-STEEL ALLOY,CADMIUM PLATED,PAN HEAD,PROTRUDING HEAD,SWAGE LOCKING,CLOSE	ABC	EA		*	*	*		*		

(1) SMR CODE	(2) FEDERAL STOCK NUMBER	(3) DESCRIPTION REFERENCE NUMBER & MFR CODE			USABLE ON CODE CH-47	(4) UNIT OF MEAS	(5) QTY INC IN UNIT	(6) 30-DAY DS/GS MAINT ALW (a) 1-20	(b) 21-50	(c) 51-100	(7) 1-YR ALWPER 100 EQUIP CNTGCY	(8) DEPOT MAINT ALWPER 100 EQUIP	(9) ILLUSTRATION (a) FIG NO	(b) ITEM NO
		FUNCTIONAL GROUP - 60	BULK MATERIALS										BULK	
				CONTINUED TOLERANCE,3/16 IN.DIA,0.983 IN.LG,0.720 IN.TO 0.781 IN. GRIP LG										
PA-FZ-Z	5320-702-3228	NAS1466-17	80205	PIN,RIVET-STEEL,PAN HEAD,.... PROTRUDING HEAD,SWAGE LOCKING,CLOSE TOLERANCE, 3/16 IN.DIA,1.296 IN.LG, 1.032 IN.TO 1.094 IN. GRIP LG	ABC	EA		*	*	*		*		
PA-FZ-Z	5320-702-3259	NAS1468-9	80205	PIN,RIVET-STEEL ALLOY,PAN.... HEAD,PROTRUDING HEAD,SWAGE LOCKING,CLOSE TOLERANCE, 1/4 IN.DIA,0.874 IN.LG, 0.532 IN.TO 0.594 IN.GRIP LG	ABC	EA		*	*	*		*		
PA-FZ-Z	5320-702-4957	NAS1466-20	80205	PIN,RIVET-STEEL,PAN HEAD,.... PROTRUDING HEAD,SWAGE LOCKING,CLOSE TOLERANCE, 3/16 IN.DIA,1.483 IN.LG, 1.220 IN.TO 1.281 IN. GRIP LG	ABC	EA		*	*	*		*		
PA-FZ-Z	5320-702-4960	NAS1466-16	80205	PIN,RIVET-STEEL,PAN HEAD,.... PROTRUDING HEAD,SWAGE LOCKING,CLOSE TOLERANCE, 3/16 IN.DIA,1.233 IN.LG, 0.970 IN.TO 1.031 IN. GRIP LG	ABC	EA		*	*	*		*		
PA-DZ-Z	5320-702-4961	NAS1466-15	80205	PIN,RIVET-STEEL,PAN HEAD,.... PROTRUDING HEAD,SWAGE LOCKING,CLOSE TOLERANCE, 3/16 IN.DIA,1.171 IN.LG	ABC	EA	1					*		
PA-DZ-Z	5320-702-4975	MS20615-3M12	96906	RIVET,SOLID-MONEL,UNIVERSAL.. HEAD,3/32 IN.DIA,0.750 IN.LG,0.609 IN.GRIP LG	ABC	LB	1	*	*	*		*		
PA-FZ-Z	5320-702-5568	NAS1080P10	80205	COLLAR,SWAGE LOCKING.....	ABC	EA	1	*	*	*		*		
PA-FZ-Z	5320-702-5619	NAS1456-8	80205	PIN,RIVET-STEEL,FLAT..... COUNTERSUNK HEAD,SWAGE LOCKING,CLOSE TOLERANCE, 3/16 IN.DIA,0.733 IN.LG, 0.470 IN.TO 0.531 IN. GRIP LG	ABC	EA		*	*	*		*		
PA-FZ-Z	5320-702-6353	NAS1466-1	80205	PIN,RIVET-STEEL,PAN HEAD,.... PROTRUDING HEAD,SWAGE LOCKING,CLOSE TOLERANCE, 3/16 IN.DIA,0.296 IN.LG	ABC	EA	1	*	*	*		*		
PB-FZ-Z	5320-702-6881	MS20615-3M10	96906	RIVET,SOLID-MONEL,UNIVERSAL.. HEAD,3/32 IN.DIA,5/8 IN.LG, 0.484 IN.GRIP LG	ABC	LB		*	*	*		*		
PA-FZ-Z	5320-702-8513	NAS1466-11	80205	PIN,RIVET-STEEL ALLOY,CADMIUM	ABC	EA		*	*	*		*		

(1) SMR CODE	(2) FEDERAL STOCK NUMBER	(3) DESCRIPTION REFERENCE NUMBER & MFR CODE		USABLE ON CODE	(4) UNIT OF MEAS	(5) QTY INC IN UNIT	(6) 30 DAY DS GS MAINT ALW (a) 1-20	(b) 21-50	(c) 51-100	(7) 1YR ALWPER 100 EQUIP CNTGCY	(8) DEPOT MAINT ALWPER 100 EQUIP	(9) ILLUSTRATION (a) FIG NO	(b) ITEM NO
		FUNCTIONAL GROUP - 60	BULK MATERIALS	CH-47									
			CONTINUED									BULK	
			PLATED,PAN HEAD,PROTRUDING HEAD,SWAGE LOCKING,CLOSE TOLERANCE,3/16 IN.DIA,0.921 IN.LG,0.657 IN.TO 0.719 IN. GRIP LG										
PA-FZ-Z	5320-720-6462	NAS1460-8	80205 PIN,RIVET-STEEL,PAN HEAD,.... PROTRUDING HEAD,SWAGE LOCKING,CLOSE TOLERANCE, 3/16 IN.DIA,0.921 IN.LG	ABC	EA		*	*	*		*		
PA-HZ-Z	5320-721-5210	MS20470A4-5	96906 RIVET,SOLID-ALUMINUM,GR1100.. UNIVERSAL HEAD,1/8 IN.DIA, 5/16 IN.LG,1/8 IN.GRIP LG	ABC	LB		*	*	*		*		
PA-FZ-Z	5320-724-9329	BACB30CG8-6	81205 PIN,RIVET-STEEL,PAN HEAD,.... 0.250 IN.DIA,2.380 IN.LG, 0.375 IN.GRIP LG	ABC	EA		*	*	*		*		
PA-FZ-Z	5320-725-6927	MS20615-5M7	96906 RIVET,SOLID-MONEL,UNIVERSAL.. HEAD,5/32 IN.DIA,7/16 IN. LG,0.204 IN.GRIP LG	ABC	LB		*	*	*		*		
PA-FZ-Z	5320-725-7277	MS20615-5M8	96906 RIVET,SOLID-MONEL,UNIVERSAL.. HEAD,5/32 IN.DIA,1/2 IN.LG, 0.266 IN.GRIP LG	ABC	LB		*	*	*		*		
PA-FZ-Z	5320-727-8418	MS20426D4-7	96906 RIVET,SOLID-ALUMINUM ALLOY,.. GR2017-T4,FLAT HEAD,1/8 IN.DIA,7/16 IN.LG, 1/4 IN.GRIP LG	ABC	LB		*	*	*		*		
PA-FZ-Z	5320-734-1986	NAS1525-15	80205 PIN,RIVET-ALUMINUM ALLOY,.... PAN HEAD,PROTRUDING HEAD, SWAGE LOCKING,CLOSE TOLERANCE,5/32 IN.DIA, 1.126 IN.LG,0.907 IN.TO 0.969 IN.GRIP LG	ABC	EA		*	*	*		*		
PA-FZ-Z	5320-734-9202	OCKLOP6D	29666 RIVET,BLIND.....	ABC	EA		*	*	*		*		
XB-FZ-Z		OCKLOP6E	29666 RIVET,BLIND.....	ABC	EA								
PA-FZ-Z	5320-734-9227	OCKLOP6H	29666 RIVET,BLIND.....	ABC	EA								
XB-FZ-Z		OCKLOP6J	29666 RIVET,BLIND..... UNIVERSAL HEAD,3/16 IN.DIA, 0.491 IN.LG,0.350 IN.GRIP LG	ABC	EA		*	*	*		*		
PA-FZ-Z	5320-734-9230	OCKLOP6K	29666 RIVET,BLIND..... UNIVERSAL HEAD,SELF -PLUGGING SHANK,3/16 IN. DIA,0.528 IN.LG,0.387 IN. GRIP LG	ABC	EA		*	*	*		*		
PA-FZ-Z	5320-734-9233	OCKLOP6N	29666 RIVET,BLIND..... UNIVERSAL HEAD,SELF -PLUGGING SHANK,3/16 IN. DIA,0.639 IN.LG,0.498 IN. GRIP LG	ABC	EA		*	*	*		*		
PA-FZ-Z	5320-753-3809	MS20600AD6W9	96906 RIVET,BLIND-ALUMINUM ALLOY,..	ABC	EA		*	*	*		*		

(1) SMR CODE	(2) FEDERAL STOCK NUMBER	(3) DESCRIPTION REFERENCE NUMBER & MFR CODE		USABLE ON CODE CH-47	(4) UNIT OF MEAS	(5) QTY INC IN UNIT	(6) 30-DAY DS/GS MAINT ALW (a) 1-20	(b) 21-50	(c) 51-100	(7) 1-YR ALWPER 100 EQUIP CNTGCY	(8) DEPOT MAINT ALWPER 100 EQUIP	(9) ILLUSTRATION (a) FIG NO	(b) ITEM NO
		FUNCTIONAL GROUP - 60	BULK MATERIALS										
			CONTINUED GR2117,PULL STEM, SELF-PLUGGING,PROTRUDING HEAD,3/16 IN.DIA,0.501 IN. TO 0.562 IN.GRIP LG, SERRATED STEM									BULK	
PA-FZ-Z	5320-753-3830	MS20613-4P5	96906 RIVET,SOLID-STEEL,CARBON,.... UNIVERSAL HEAD,1/8 IN. DIA,0.312 IN.LG	ABC	LB		*	*	*		*		
PA-FZ-Z	5320-754-0822	MS20470AD4-5	96906 RIVET,SOLID-ALUMINUM ALLOY... GR2117,UNIVERSAL HEAD,1/8 IN.DIA,5/16 IN.LG,0.125 IN. GRIP LG	ABC	LB		*	*	*		*		
PA-FZ-Z	5320-754-0992	MS20470AD6-7	96906 RIVET,SOLID-ALUMINUM ALLOY,.. GR2117,UNIVERSAL HEAD, 3/16 IN.DIA,7/16 IN.LG, 0.157 IN.GRIP LG	ABC	LB		*	*	*		*		
C PA-FZ-Z	5320-754-1906	MS20470A3-6	96906 RIVET,SOLID-ALUMINUM,..... GR1100,UNIVERSAL HEAD, 3/32 IN.DIA,3/8 IN.LG, 0.234 IN.GRIP LG	ABC	LB		*	*	*		*		
PA-FZ-Z	5320-761-8454	NAS1097AD3-6	80205 RIVET,SOLID-ALUMINUM ALLOY,.. GR2117-T4,FLUSH,SHEAR HEAD,3/32 IN.DIA, 0.375 IN.LG	ABC	EA		*	*	*		*		
PA-FZ-Z	5320-764-7287	BACB30CC5W4	81205 RIVET,BLIND.....	ABC	EA		*	*	*		*		
PA-FZ-Z	5320-780-9615	BACB30CC6W5	81205 RIVET,BLIND-STEEL,HEX HEAD,.. MECHANICALLY EXPANDED, SELF-PLUGGING SHANK W/COLLAR & SLEEVE,3/16 IN. DIA,0.694 IN.LG,5/16 IN. GRIP LG	ABC	EA		*	*	*		*		
PA-FZ-Z	5320-781-0485	BACB30CC6W3	81205 RIVET,BLIND.....	ABC	EA		*	*	*		*		
PA-FZ-Z	5320-781-0490	BACB30CC5W2	81205 RIVET,BLIND-MECHANICALLY..... EXPANDED,STEEL, SELF-PLUGGING SHANK,5/32 IN.DIA,0.095 IN.TO 0.156 IN.GRIP RANGE	ABC	EA		*	*	*		*		
PA-OZ-Z	5320-788-8066	MS20470D7-8	96906 RIVET,SOLID-ALUMINUM ALLOY,... GR2017,UNIVERSAL HEAD, 7/32 IN.DIA,1/2 IN.LG,0.172 IN.GRIP LG	ABC	LB		*	*	*		*		
PA-FZ-Z	5320-800-6276	NAS1739B5-3	80205 RIVET,BLIND-ALUMINUM ALLOY... SLEEVE,STEEL ALLOY SPINDLE, 100 DEG FLUSH HEAD, MECHANICALLY LOCKED SPINDLE,BULBED,5/32 IN.DIA, 0.540 IN.LG,0.126 IN.TO 0.187 IN.GRIP LG	ABC	EA		*	*	*		*		
PA-FZ-Z	5320-800-6277	NAS1739B4-2	80205 RIVET,BLIND-ALUMINUM ALLOY...	ABC	EA		*	*	*		*		

(1) SMR CODE	(2) FEDERAL STOCK NUMBER	(3) DESCRIPTION REFERENCE NUMBER & MFR CODE		USABLE ON CODE	(4) UNIT OF MEAS	(5) QTY INC IN UNIT	(6) 30-DAY DS/GS MAINT ALW (a) 1-20	(b) 21-50	(c) 51-100	(7) 1-YR ALWPER 100 EQUIP CNTGCY	(8) DEPOT MAINT ALWPER 100 EQUIP	(9) ILLUSTRATION (a) FIG NO	(b) ITEM NO
		FUNCTIONAL GROUP - 60	BULK MATERIALS	CH-47									
			CONTINUED SLEEVE,STEEL ALLOY SPINDLE, 100 DEG FLUSH HEAD, MECHANICALLY LOCKED SPINDLE,BULBED,1/8 IN.DIA, 0.440 IN.LG,0.063 IN.TO 0.125 IN.GRIP LG									BULK	
PA-FZ-Z	5320-800-6278	NAS173984-3	80205 RIVET,BLIND-ALUMINUM ALLOY... SLEEVE & STEEL ALLOY SPINDLE,100 DEG FLUSH HEAD, MECHANICALLY LOCKED SPINDLE,BULBED,1/8 IN.DIA, 1/2 IN.LG,0.126 IN.TO 0.187 IN.GRIP LG	ABC	EA		*	*	*		*		
PA-FZ-Z	5320-800-6405	NAS1465-1	80205 PIN,RIVET-STEEL ALLOY,CADMIUM PLATED,PAN HEAD,PROTRUDING HEAD,SWAGE LOCKING,CLOSE TOLERANCE,5/32 IN.DIA,0.251 IN.LG,0.031 IN.TO 0.094 IN. GRIP LG	ABC	EA		*	*	*		*		
PA-DZ-Z	5320-800-7860	NAS1465-5	80205 PIN,RIVET-STEEL,ALLOY,CADMIUM PLATED,PAN HEAD,PROTRUDING HEAD,SWAGE LOCKING,CLOSE TOLERANCE,5/32 IN.DIA,0.501 IN.LG,0.282 IN.TO 0.344 IN. GRIP LG	ABC	EA						*		
PA-FZ-Z	5320-800-9544	NAS1465-2	80205 PIN,RIVET-STEEL ALLOY,CADMIUM PLATED,PAN HEAD,PROTRUDING HEAD,SWAGE LOCKING,CLOSE TOLERANCE,5/32 IN.DIA,0.313 IN.LG,0.095 IN.TO 0.156 IN. GRIP LG	ABC	EA		*	*	*		*		
PA-DZ-Z	5320-800-9545	NAS1465-3	80205 PIN,RIVET-STEEL ALLOY,CADMIUM PLATED,PAN HEAD,PROTRUDING HEAD,SWAGE LOCKING,CLOSE TOLERANCE,5/32 IN.DIA,0.376 IN.LG,0.157 IN.TO 0.219 IN. GRIP LG	ABC	EA						*		
PA-DZ-Z	5320-800-9546	NAS1465-4	80205 PIN,RIVET-STEEL ALLOY,CADMIUM PLATED,PAN HEAD,PROTRUDING HEAD,SWAGE LOCKING,CLOSE TOLERANCE,5/32 IN.DIA,0.438 IN.LG,0.220 IN.TO 0.281 IN. GRIP LG	ABC	EA						*		
PA-FZ-Z	5320-801-4796	NAS1475-3	80205 PIN,SWAGE LOCKING-STEEL,..... PULL TYPE,CLOSE TOLERANCE, 5/32 IN.DIA,0.157 IN.TO 0.219 IN.GRIP LG	ABC	EA		*	*	*		*		
PA-FZ-Z	5320-801-4797	NAS1475-4	80205 PIN,RIVET-STEEL ALLOY,CADMIUM PLATED,FLAT HEAD,SWAGE	ABC	EA		*	*	*		*		

	(1) SMR CODE	(2) FEDERAL STOCK NUMBER	(3) DESCRIPTION REFERENCE NUMBER & MFR CODE		USABLE ON CODE	(4) UNIT OF MEAS	(5) QTY INC IN UNIT	(6) 30-DAY DS/GS MAINT ALW (a) 1-20	(b) 21-50	(c) 51-100	(7) 1-YR ALWPER 100 EQUIP CNTGCY	(8) DEPOT MAINT ALWPER 100 EQUIP	(9) ILLUSTRATION (a) FIG NO	(b) ITEM NO
			FUNCTIONAL GROUP - 60 BULK MATERIALS		CH-47									
			CONTINUED LOCKING,CLOSE TOLERANCE, 5/32 IN.DIA,0.438 IN.LG, 0.220 IN.TO 0.281 IN.GRIP LG										BULK	
	PA-FZ-Z	5320-801-4799	NAS1475-6	80205	PIN,RIVET.....	ABC	EA		*	*	*		*		
	PA-FZ-Z	5320-802-1404	BACB30CH6-4	81205	PIN,RIVET-STEEL,CADMIUM..... PLATED,FLAT HEAD,3/16 DIA, 1.69 LG,1/4 IN.GRIP LG	ABC	EA		*	*	*		*		
C C	PA-HZ-Z	5320-802-4065	BACB30CG8-4	81205	PIN,RIVET-STEEL,PAN HEAD,..... 0.430 IN.DIA,0.147 IN.LG, 1/4 IN.GRIP LG	ABC	EA		*	*	*		*		
C C	PB-FZ-Z	5320-802-4067	BACB30CG6-8	81205	PIN,RIVET-STEEL,PAN HEAD,..... 0.327 IN.DIA,0.111 IN.LG, 1/2 IN.GRIP LG	ABC	EA		*	*	*		*		
C C	PA-FZ-Z	5320-802-4068	BACB30CG8-10	81205	PIN,RIVET-STEEL,PAN HEAD,..... 0.250 IN.DIA,2.880 IN.LG, 0.625 IN.GRIP LG	ABC	EA		*	*	*		*		
	PA-HZ-Z	5320-802-4069	BACB30CG8-8	81205	PIN RIVET,GROOVED-STEEL..... ALLOY,PAN HEAD,CADMIUM PLATED,0.265 IN.DIA,2 IN.LG,0.470 IN.TO 0.531 IN. GRIP LG COMP	ABC	EA		*	*	*		*		
R	PA-FZ-Z	5320-092-4639	BACB30CG8-14	81205	PIN,RIVET-STEEL,PAN HEAD,..... 0.250 IN.DIA,3.250 IN.LG, 0.875 IN.GRIP LG	ABC	EA		*	*	*		*		
R	PA-FZ-Z	5320-163-9022	BACB30CG8-18	81205	PIN,RIVET-STEEL,PAN HEAD,..... 0.250 IN.DIA,3.250 IN.LG, 0.125 IN.GRIP LG	ABC	EA		*	*	*		*		
N	PB-FZ-Z	5320-802-4067	R3007T6-8	11815	PIN,RIVET-STEEL,CADMIUM..... PLATED,PAN HEAD,0.327 IN. DIA,0.111 IN.H,1/2 IN.GRIP LG	ABC	EA		*	*	*		*		
C C	PA-FZ-Z	5320-802-4078	R3007T10-10	29666	PIN,RIVET-STEEL,PAN HEAD,..... CADMIUM PLATED,5/16 IN.DIA, 0.996 IN.LG,5/8 IN.GRIP LG	ABC	EA		*	*	*		*		
	XB-FZ-Z		BACB30CG10-14	81205	PIN,RIVET-STEEL,PAN HEAD,..... 0.313 IN.DIA,3.060 IN.LG, 0.875 IN.GRIP LG	ABC	EA								
R	PA-FZ-Z	5320-037-8922	BACB30CG10-26	81205	PIN,RIVET-STEEL,PAN HEAD,..... 0.313 IN.DIA,3.190 IN.LG, 1.625 IN.GRIP LG	ABC	EA		*	*	*		*		
	PA-FZ-Z	5320-803-7119	MS20470A5-9	96906	RIVET,SOLID-ALUMINUM,..... GR1100,UNIVERSAL HEAD, 5/32 IN.DIA,9/16 IN.LG, 0.329 IN.GRIP LG	ABC	LB		*	*	*		*		
	PA-FZ-Z	5320-805-3169	BACB30CG6-2	81205	PIN,RIVET-STEEL,PAN HEAD,..... 0.188 IN.DIA,1.440 IN.LG, 0.125 IN.GRIP LG	ABC	EA		*	*	*		*		
	PA-FZ-Z	5320-807-9273	NAS1525-6	80205	PIN,RIVET-ALUMINUM ALLOY,.....	ABC	EA		*	*	*		*		

(1) SMR CODE	(2) FEDERAL STOCK NUMBER	(3) DESCRIPTION REFERENCE NUMBER & MFR CODE		USABLE ON CODE	(4) UNIT OF MEAS	(5) QTY INC IN UNIT	(6) 30-DAY DS/GS MAINT ALW (a) 1-20	(b) 21-50	(c) 51-100	(7) 1 YR ALWPER (A) EQUIP CNTGCY	(8) DEPOT MAINT ALWPER 100 EQUIP	(9) ILLUSTRATION (a) FIG NO	(b) ITEM NO
		FUNCTIONAL GROUP - 60 BULK MATERIALS		CH-47									
			CONTINUED PAN HEAD,PROTRUDING HEAD, SWAGE LOCKING,CLOSE TOLERANCE,5/32 IN.DIA,0.563 IN.LG,0.345 IN.TO 0.406 IN. GRIP LG									BULK	
PA-FZ-Z	5320-807-9275	NAS1525-8	80205 PIN,RIVET-ALUMINUM ALLOY,.... PAN HEAD,PROTRUDING HEAD, SWAGE LOCKING,CLOSE TOLERANCE,5/32 IN.DIA, 0.688 IN.LG,0.470 IN.TO 0.531 IN.GRIP LG	ABC	EA		*	*	*		*		
PB-FZ-Z	5320-808-0811	MS20615-3M9	96906 RIVET,SOLID-MONEL,UNIVERSAL.. HEAD,3/32 IN.DIA,9/16 IN. LG,0.422 IN.GRIP LG	ABC	LB		*	*	*		*		
PB-FZ-Z	5320-808-0813	MS20615-4M9	96906 RIVET,SOLID-MONEL,UNIVERSAL.. HEAD,1/8 IN.DIA,9/16 IN.LG, 0.375 IN.GRIP LG	ABC	LB		*	*	*		*		
PA-FZ-Z	5320-808-7822	MS20470AD3-8	96906 RIVET,SOLID-ALUMINUM ALLOY,.. GR2117-T4,UNIVERSAL HEAD 3/32 IN.DIA,1/2 IN.LG, 0.359 IN.GRIP LG	ABC	LB		*	*	*		*		
PA-HZ-Z	5320-809-1683	BACB30CG8-5	81205 PIN,RIVET,GROOVED.....	ABC	EA		*	*	*		*		
C PA-FZ-Z	5320-809-1685	BACB30CG6-7	81205 PIN,RIVET-STEEL,CADMIUM..... -PLATED,3/16 IN.DIA,2-1/16 IN.LG,7/16 IN.GRIP LG	ABC	EA		*	*	*		*		
C													
PA-FZ-Z	5320-812-8694	BACB30CG8-2	81205 PIN,RIVET-STEEL ALLOY,PAN.... HEAD,1/4 IN.DIA,7/8 IN.LG, 1/8 IN.GRIP LG	ABC	EA		*	*	*		*		
PA-DZ-Z	5320-812-8695	BACB30CG8-11	81205 PIN,RIVET.....	ABC	EA						*		
PA-FZ-Z	5320-813-4144	MS20600AD6W7	96906 RIVET,BLIND-ALUMINUM ALLOY,.. GR2117,PULL STEM, SELF-PLUGGING,PROTRUDING HEAD,3/16 IN.DIA,0.376 IN. TO 0.437 IN.GRIP LG, SERRATED STEM	ABC	EA		*	*	*		*		
PA-FZ-Z	5320-813-4793	MS20600AD5W8	96906 RIVET,BLIND-ALUMINUM ALLOY,.. GR2117,PULL STEM, SELF-PLUGGING,PROTRUDING HEAD,5/32 IN.DIA,0.438 IN. TO 0.500 IN.GRIP LG, SERRATED STEM	ABC	EA		*	*	*		*		
PA-FZ-Z	5320-814-8677	MS20601AD4W6	96906 RIVET,BLIND-ALUMINUM ALLOY,.. GR2117,PULL STEM, SELF-PLUGGING,FLAT HEAD,1/8	ABC	EA		*	*	*		*		

(1) SMR CODE	(2) FEDERAL STOCK NUMBER	(3) DESCRIPTION REFERENCE NUMBER & MFR CODE		USABLE ON CODE CH-47	(4) UNIT OF MEAS	(5) QTY INC IN UNIT	(6) 30-DAY DS/GS MAINT ALW (a) 1-20	(b) 21-50	(c) 51-100	(7) 1-YR ALWPER 100 EQUIP CNTGCY	(8) DEPOT MAINT ALWPER 100 EQUIP	(9) ILLUSTRATION (a) FIG NO	(b) ITEM NO
		FUNCTIONAL GROUP - 60 BULK MATERIALS											
		CONTINUED IN.DIA,0.313 IN.TO 0.375 IN.GRIP LG,SERRATED STEM										BULK	
PA-FZ-Z	5320-814-9771	MS20601AD5W6	96906	RIVET,BLIND-ALUMINUM ALLOY,.. GR2117,PULL STEM, SELF-PLUGGING,FLAT HEAD, 5/32 IN.DIA,0.313 IN.TO 0.375 IN.GRIP LG, SERRATED STEM	ABC	EA		*	*	*		*		
PA-OZ-Z	5320-818-0942	MS20615-6M12	96906	RIVET,SOLID-MONEL,UNIVERSAL.. HEAD,3/16 IN.DIA,3/4 IN.LG, 0.469 IN.GRIP LG	ABC	LB		*	*	*		*		
PA-FZ-Z	5320-819-9746	NAS1097AD5-5	80205	RIVET,SOLID-ALUMINUM ALLOY,.. GR2117-T4,FLUSH SHEAR HEAD,100 DEG,5/32 IN.DIA 0.312 IN.LG	ABC	LB		*	*	*		*		
PA-FZ-Z	5320-822-6257	MS20600B6W10	96906	RIVET,BLIND-ALUMINUM ALLOY,.. GR5056,PULL STEM, SELF-PLUGGING,PROTRUDING HEAD,3/16 IN.DIA,0.563 IN. TO 0.625 IN.GRIP LG, SERRATED STEM	ABC	EA		*	*	*		*		
PB-FZ-Z	5320-824-1538	KB210-6-2	75237	RIVET,BLIND-CADMIUM PLATED,.. HEX,3/16 IN.DIA,0.506 IN. LG,9/16 IN.GRIP LG	ABC	EA		*	*	*		*		
PA-FZ-Z	5320-826-3245	MS20600M5W3	96906	RIVET,BLIND-MONEL,PULL STEM,.. SELF-PLUGGING,PROTRUDING HEAD,5/32 IN.DIA,0.126 IN. TO 0.187 IN.GRIP LG, SERRATED STEM	ABC	EA		*	*	*		*		
PA-FZ-Z	5320-763-3682	BACB30CG6-5	81205	PIN,RIVET-STEEL PAN HEAD,.... 0.297 IN.TO 0.327 IN.DIA, 0.2025 IN.TO 0.2055 IN.LG, 5/16 IN.GRIP LG	ABC	EA		*	*	*		*		
PA-FZ-Z	5320-827-4962	NAS1535-3	80205	PIN,RIVET-ALUMINUM ALLOY,.... GR7075-T6,SWAGE LOCKING, PULL TYPE,CLOSE TOLERANCE, 5/32 IN.DIA,0.376 IN.LG, 0.157 IN.TO 0.219 IN. GRIP LG	ABC	EA		*	*	*		*		
PA-FZ-Z	5320-827-7058	NAS1535-4	80205	PIN,RIVET-ALUMINUM ALLOY,.... GR7075-T6,SWAGE LOCKING, PULL TYPE,CLOSE TOLERANCE, 5/32 IN.DIA,0.438 IN.LG, 0.220 IN.TO 0.281 IN. GRIP LG	ABC	EA		*	*	*		*		
PA-FZ-Z	5320-827-7061	NAS1525-4	80205	PIN,RIVET-ALUMINUM ALLOY,.... PAN HEAD,PROTRUDING HEAD, SWAGE LOCKING,CLOSE TOLERANCE,5/32 IN.DIA,0.438	ABC	EA		*	*	*		*		

(1) SMR CODE	(2) FEDERAL STOCK NUMBER	(3) DESCRIPTION REFERENCE NUMBER & MFR CODE			USABLE ON CODE	(4) UNIT OF MEAS	(5) QTY INC IN UNIT	(6) 30-DAY DS/GS MAINT ALW (a) 1-20	(b) 21-50	(c) 51-100	(7) 1 YR ALWPER 100 EQUIP CNTGCY	(8) DEPOT MAINT ALWPER 100 EQUIP	(9) ILLUSTRATION (a) FIG NO	(b) ITEM NO
		FUNCTIONAL GROUP - 60	BULK MATERIALS		CH-47									
				CONTINUED									BULK	
				IN.LG,0.220 IN.TO 0.281 IN. GRIP LG										
PA-FZ-Z	5320-828-6888	BA6A5F	92215	RIVET,BLIND.....	ABC	EA		*	*	*		*		
PA-OZ-Z	5320-833-2433	MS20615-4M16	96906	RIVET,SOLID-MONEL,UNIVERSAL.. HEAD,1/8 IN.DIA,1.000 IN. LG,0.812 IN.GRIP LG	ABC	EA		*	*	*		*		
PA-FZ-Z	5320-835-5369	MS20600AD4W8	96906	RIVET,BLIND-ALUMINUM ALLOY,.. GR2117,PULL STEM, SELF-PLUGGING,PROTRUDING HEAD,1/8 IN.DIA,0.438 IN.TO 0.500 IN.GRIP LG,SERRATED STEM	ABC	EA		*	*	*		*		
PA-FZ-Z	5320-836-1081	NAS1535-5	80205	PIN,RIVET-ALUMINUM ALLOY,.... GR7075-T6,SWAGE LOCKING, PULL TYPE,CLOSE TOLERANCE, 5/32 IN.DIA,0.501 IN.LG, 0.282 IN.TO 0.344 IN. GRIP LG	ABC	EA		*	*	*		*		
PA-FZ-Z	5320-840-0989	BA10A6H	92215	RIVET,BLIND.....	ABC	EA		*	*	*		*		
PA-FZ-Z	5320-840-0992	BACB30CC8W4	81205	RIVET,BLIND-STEEL,CADMIUM.... PLATED,HEX HEAD, MECHANICALLY EXPANDED, SELF-PLUGGING THREADED SHANK W/SLEEVE,1/4 IN.DIA, 1.131 IN.LG,1/4 IN.GRIP LG	ABC	EA		*	*	*		*		
PB-FZ-Z	5320-840-0993	BACB30CC8W7	81205	RIVET,BLIND-STEEL,HEX HEAD,.. CADMIUM PLATED,MECHANICALLY EXPANDED,SELF-PLUGGING SHANK W/COLLAR & SLEEVE,1/4 IN.DIA,7/16 IN.GRIP LG	ABC	EA		*	*	*		*		
PB-FZ-Z	5320-840-0994	BACB30CC5W9	81205	RIVET,BLIND-STEEL,CADMIUM.... PLATED,MECHANICALLY EXPANDED,SELF-PLUGGING SHANK W/COLLAR & SLEEVE, 5/32 IN.DIA,9/16 IN.GRIP LG	ABC	EA		*	*	*		*		
PB-FZ-Z	5320-840-0996	BACB30CC6W7	81205	RIVET,BLIND-STEEL,CADMIUM.... PLATED,HEX HEAD, MECHANICALLY EXPANDED, SELF-PLUGGING SHANK W/SLEEVE,3/16 IN.DIA,0.541 IN.LG,0.407 IN.TO 0.469 IN.GRIP LG	ABC	EA		*	*	*		*		
PA-FZ-Z	5320-840-3684	BACB30CC5-3	81205	RIVET,BLIND-STEEL,HEX HEAD,.. SELF-PLUGGING SHANK W/ COLLAR & SLEEVE,5/32 IN. DIA,0.534 IN.LG,3/16 IN. GRIP LG	ABC	EA		*	*	*		*		
PA-OZ-Z	5320-842-7333	MS20600M4W3	96906	RIVET,BLIND-MONEL,PULL STEM.. SELF-PLUGGING,PROTRUDING	ABC	EA		*	*	*		*		

C
C
C
C

(1) SMR CODE	(2) FEDERAL STOCK NUMBER	(3) DESCRIPTION REFERENCE NUMBER & MFR CODE			USABLE ON CODE CH-47	(4) UNIT OF MEAS	(5) QTY INC IN UNIT	(6) 30-DAY DS/GS MAINT ALW (a) 1-20	(b) 21-50	(c) 51-100	(7) 1-YR ALWPER 100 EQUIP CNTGCY	(8) DEPOT MAINT ALWPER 100 EQUIP	(9) ILLUSTRATION (a) FIG NO	(b) ITEM NO
		FUNCTIONAL GROUP - 60	BULK MATERIALS											
				CONTINUED HEAD,1/8 IN.DIA,0.126 IN. TO 0.187 IN.GRIP LG, SERRATED STEM									BULK	
PA-FZ-Z	5320-843-0534	MS20427-5C16	96906	RIVET,SOLID-STEEL,CARBON,.... CADMIUM PLATED,FLAT HEAD, 5/32 IN.DIA,1 IN.LG	ABC	LB						*		
PA-FZ-Z	5320-844-1851	MS20615-4M6	96906	RIVET,SOLID-MONEL,UNIVERSAL.. HEAD,1/8 IN.DIA,3/8 IN.LG, 0.187 IN.GRIP LG	ABC	LB		*	*	*		*		
PA-FZ-Z	5320-845-9501	MS2060084W4	96906	RIVET,BLIND-ALUMINUM ALLOY,.. GR5056,PULL STEM,SELF-PLUGGING,PROTRUDING HEAD, 1/8 IN.DIA,0.188 IN.TO 0.250 IN.GRIP LG, SERRATED STEM	ABC	EA		*	*	*		*		
PA-OZ-Z	5320-850-5809	MS20427M3-6	96906	RIVET,SOLID-MONEL,FLAT HEAD,. 3/32 IN.DIA,3/8 IN.LG COMP	ABC	EA		*	*	*		*		
PA-FZ-Z	5320-850-5810	MS20427M3-4	96906	RIVET,SOLID-MONEL,FLAT HEAD,. 3/32 IN.DIA,1/4 IN.LG	ABC	LB		*	*	*		*		
PA-FZ-Z	5320-853-0360	NAS1080-10	80205	COLLAR,RIVET PIN-ALUMINUM,... GR2024-T4,0.304 IN.ID,0.537 IN.OD,0.380 IN.LG,FOR 5/16 IN.DIA PIN	ABC	EA		*	*	*		*		
PA-FZ-Z	5320-853-0361	NAS1080-12	80205	COLLAR,RIVET PIN-ALUMINUM,... GR2024-T4,0.371 IN.ID, 0.637 IN.OD,0.509 IN.LG, FOR 3/8 IN.DIA PIN	ABC	EA		*	*	*		*		
PA-FZ-Z	5320-853-4971	BA10A5H	92215	RIVET,BLIND.....	ABC	EA		*	*	*		*		
PA-FZ-Z	5320-864-6203	NAS1080E6	80205	COLLAR,RIVET PIN-STEEL,..... CADMIUM PLATED,SHEAR TYPE, 0.189 IN.ID,0.319 IN.OD, 0.205 IN.LG	ABC	EA		*	*	*		*		
PA-FZ-Z	5320-871-4585	NAS1398D6-10	80205	RIVET,BLIND-ALUMINUM ALLOY,.. GR2017,PAN HEAD,PROTRUDING HEAD,LOCKED SPINDLE,3/16 IN.DIA,0.787 IN.LG,0.563 IN.TO 0.625 IN.GRIP LG	ABC	EA		*	*	*		*		
PB-FZ-Z	5320-878-7184	NAS1080R6	80205	COLLAR,RIVET PIN-STEEL,..... CARBON,0.187 IN.ID,0.320 IN.OD,0.257 IN.LG	ABC	EA		*	*	*		*		
PA-FZ-Z	5320-887-3507	BACB30CG8-26	81205	RIVET BLIND.....	ABC	EA		*	*	*		*		
PA-OZ-Z	5320-889-2494	NAS1097AD4-5	80205	RIVET,SOLID-ALUMINUM ALLOY... GR2117-T4,100 DEG FLUSH SHEAR HEAD,1/8 IN.DIA,0.312 IN.LG	ABC	EA		*	*	*		*		
PA-OZ-Z	5320-889-2495	NAS1097AD4-6	80205	RIVET,SOLID-ALUMINUM ALLOY,.. GR2024-T4,FLUSH SHEAR HEAD,100 DEG,1/8 IN.DIA, 0.375 IN.LG	ABC	LB		*	*	*		*		
PA-FZ-Z	5320-889-9915	MS20600M4W1	96906	RIVET,BLIND-MONEL,PULL STEM,.	ABC	EA		*	*	*		*		

(1) SMR CODE	(2) FEDERAL STOCK NUMBER	(3) DESCRIPTION REFERENCE NUMBER & MFR CODE		USABLE ON CODE	(4) UNIT OF MEAS	(5) QTY INC IN UNIT	(6) 30-DAY DS GS MAINT ALW (a) 1-20	(b) 21-50	(c) 51-100	(7) 1-YR ALWPER 100 EQUIP CNTGCY	(8) DEPOT MAINT ALWPER 100 EQUIP	(9) ILLUSTRATION (a) FIG NO	(b) ITEM NO
		FUNCTIONAL GROUP - 60 BULK MATERIALS		CH-47									
		CONTINUED										BULK	
		SELF-PLUGGING, PROTRUDING HEAD, 1/8 IN.DIA, UP TO 0.062 IN.GRIP LG, SERRATED STEM											
XB-FZ-Z		BA12A12H	92215	RIVET, BLIND-STEEL, CADMIUM.... PLATED, HEX HEAD, MECHANICALLY EXPANDED, SELF-PLUGGING SHANK W/COLLAR & SLEEVE, 3/8 IN. DIA, 1.462 IN.LG, 3/4 IN.GRIP LG	ABC	EA							
XB-FZ-Z		BACB30CC10W14	81205	RIVET, BLIND-STEEL, HEX,..... CADMIUM-PLATED, SELF-PLUGGING SHANK W/COLLAR & SLEEVE, 5/16 IN.DIA, 1.423 IN.LG, 7/8 IN.GRIP LG	ABC	EA							
PA-FZ-Z	5320-891-1309	BACB30CC10W12	81205	RIVET, BLIND-STEEL, HEX,..... CADMIUM-PLATED, SELF-PLUGGING SHANK W/COLLAR & SLEEVE, 5/16 IN.DIA, 1.298 IN.LG, 3/4 IN.GRIP LG	ABC	EA	*	*	*		*		
PA-FZ-Z	5320-891-1310	BACB30CC10W10	81205	RIVET, BLIND-STEEL, HEX,..... CADMIUM-PLATED, SELF-PLUGGING SHANK W/COLLAR & SLEEVE, 5/16 IN.DIA, 1.173 IN.LG, 5/8 IN.GRIP LG	ABC	EA	*	*	*		*		
XB-FZ-Z		BACB30CC12W14	81205	RIVET, BLIND-STEEL, HEX,..... CADMIUM-PLATED, SELF-PLUGGING SHANK W/COLLAR & SLEEVE, 0.318 IN.DIA, 1.587 IN.LG, 7/8 IN.GRIP LG	ABC	EA							
PA-FZ-Z	5320-891-1319	BACB30CG10-6	81205	PIN, RIVET-STEEL, PAN HEAD,.... 0.313 IN.DIA, 2.310 IN.LG, 0.375 IN.GRIP LG	ABC	EA	*	*	*		*		
XB-FZ-Z		BACB30CG10-18	81205	PIN, RIVET-STEEL, CADMIUM..... PLATED, PAN HEAD, 0.313 IN. DIA, 3.060 IN.LG, 1.125 IN. GRIP LG	ABC	EA							
PA-FZ-Z	5320-891-1324	BACB30CG8-22	81205	PIN, RIVET-STEEL, PAN HEAD,.... 0.250 IN.DIA, 3.250 IN. LG, 1.375 IN.GRIP LG	ABC	EA	*	*	*		*		
PA-FZ-Z	5320-891-1332	BACB30CG10-4	81205	PIN, RIVET-STEEL, PAN HEAD,.... 0.313 IN.DIA, 2.060 IN.LG, 0.250 IN.GRIP LG	ABC	EA	*	*	*		*		
PA-FZ-Z	5320-891-1829	MLSPM5-2	29666	RIVET, BLIND.....	ABC	EA	*	*	*		*		
PA-FZ-Z	5320-898-7879	BACB30CG10-22	81205	PIN, RIVET-STEEL, PAN HEAD,.... 0.313 IN.DIA, 3.060 IN.LG, 1.375 IN.GRIP LG	ABC	EA	*	*	*		*		
PA-FZ-Z	5320-898-7895	BACB30CG12-4	81205	PIN, RIVET-STEEL, PAN HEAD,.... 0.375 IN.DIA, 2.250 IN.LG,	ABC	EA	*	*	*		*		

	(1) SMR CODE	(2) FEDERAL STOCK NUMBER	(3) DESCRIPTION — REFERENCE NUMBER & MFR CODE			USABLE ON CODE CH-47	(4) UNIT OF MEAS	(5) QTY INC IN UNIT	(6) 30-DAY DS/GS MAINT ALWP (a) 1-20	(b) 21-50	(c) 51-100	(7) 1-YR ALWPER 100 EQUIP CNTGCY	(8) DEPOT MAINT ALWPER 100 EQUIP	(9) ILLUSTRATION (a) FIG NO	(b) ITEM NO
			FUNCTIONAL GROUP - 60 BULK MATERIALS												
					CONTINUED									BULK	
					0.250 IN.GRIP LG										
	PA-OZ-Z	5320-898-7936	MS20615-6M18	96906	RIVET,SOLID-MONEL,UNIVERSAL.. HEAD,3/16 IN.DIA,1-1/8 IN. LG,0.844 IN.GRIP LG	ABC	EA		*	*	*		*		
	XB-FZ-Z		BA6A11H	92215	RIVET,BLIND.....	ABC	EA								
C	XB-FZ-Z		NAS1242D6-10	80205	RIVET,SOLID-ALUMINUM ALLOY,.. GR2017-T4,UNIVERSAL HEAD, 7/32 IN.DIA,0.625 IN.LG	ABC	EA								
C	XB-FZ-Z		NAS1242D6-12	80205	RIVET,SOLID-ALUMINUM ALLOY,.. GR2017-T4,UNIVERSAL HEAD, STRAIGHT SHANK,0.219 IN. DIA,0.750 IN.LG	ABC	EA								
	PA-FZ-Z	5320-910-8410	NAS1097AD3-3	80205	RIVET,SOLID-ALUMINUM ALLOY,.. GR2024-T4,FLUSH SHEAR HEAD 100 DEG ,3/32 IN.DIA, 0.188 IN.LG	ABC	OZ		*	*	*		*		
	PA-FZ-Z	5320-914-3254	BA10A15H	92215	RIVET,BLIND.....	ABC	EA		*	*	*		*		
	PA-DZ-Z	5320-914-7032	NAS1465-7	80205	PIN,RIVET.....	ABC	EA						*		
N	PA-FZ-Z	5320-916-9662		29666	RIVET,BLIND-ALUMINUM ALLOY,.. 100 DEG COUNTERSUNK HEAD, MECHANICALLY EXPANDED, SELF-PLUGGING SHANK, 5/32 IN.DIA,0.217 IN.LG,0.100 IN.GRIP LG	ABC	EA		*	*	*		*		
	PA-FZ-Z	5320-916-9668	BA10A8H	92215	RIVET,BLIND.....	ABC	EA		*	*	*		*		
N	PA-FZ-Z	5320-918-4886	NAS1398B5-2	80205	RIVET,BLIND-ALUMINUM ALLOY,.. 0.046 IN.TO 0.076 IN.GRIP	ABC	EA		*	*	*		*		
	PA-FZ-Z	5320-929-9305	MS20426B4-24	96906	RIVET,SOLID-ALUMINUM ALLOY,... GR5056-H32,FLAT HEAD,1/8 IN.DIA,1-1/2 IN.LG,1.312 IN.GRIP LG	ABC	LB		*	*	*		*		
	PA-FZ-Z	5320-935-1227	WP260-3	98524	RIVET,BLIND.....	ABC	EA		*	*	*		*		
	PA-FZ-Z	5320-935-3538	BA6A14H	98524	RIVET,BLIND.....	ABC	EA		*	*	*		*		
	PA-FZ-Z	5320-936-6194	BACB30HW12-20	81205	PIN,RIVET.....	ABC	EA		*	*	*		*		
	PA-FZ-Z	5320-936-6215	BACB30HW12-8	81205	PIN,RIVET.....	ABC	EA		*	*	*		*		
	PA-FZ-Z	5320-936-6216	BACB30HW12-12	81205	PIN,RIVET.....	ABC	EA		*	*	*		*		
	PA-FZ-Z	5320-936-6217	BACB30HW12-4	81205	PIN,RIVET.....	ABC	EA		*	*	*		*		
	XB-FZ-Z		BACB30HW12-16	81205	PIN,RIVET.....	ABC	EA								
	PA-FZ-Z	5320-936-6219	BACB30HW10-4	81205	PIN,RIVET.....	ABC	EA		*	*	*		*		
	PA-FZ-Z	5320-936-6220	BACB30HW10-8	81205	PIN,RIVET.....	ABC	EA		*	*	*		*		
	PA-FZ-Z	5320-936-6221	BACB30HW10-16	81205	PIN,RIVET.....	ABC	EA		*	*	*		*		
	PA-FZ-Z	5320-936-6222	BACB30HW10-12	81205	PIN,RIVET.....	ABC	EA		*	*	*		*		
	PA-FZ-Z	5320-936-6223	BACB30HW10-20	81205	PIN,RIVET.....	ABC	EA		*	*	*		*		
	PA-FZ-Z	5320-937-5441	BACB30AY6W21	81205	RIVET,BLIND.....	ABC	EA		*	*	*		*		
	PA-FZ-Z	5320-937-5442	BACB30AY6W20	81205	RIVET,BLIND-STEEL,CADMIUM.... PLATED,DISHED COUNTERSUNK HEAD,MECHANICALLY EXPANDED, SELF-PLUGGING SHANK W/COLLAR & SLEEVE,0.188 IN.	ABC	EA		*	*	*		*		

(1) SMR CODE	(2) FEDERAL STOCK NUMBER	(3) DESCRIPTION REFERENCE NUMBER & MFR CODE			USABLE ON CODE	(4) UNIT OF MEAS	(5) QTY INC IN UNIT	(6) 30-DAY DS/GS MAINT ALW (a) 1-29	(b) 21-50	(c) 51-100	(7) 1-YR ALWPER 100 EQUIP ON TCCY	(8) DEPOT MAINT ALWPER 100 EQUIP	(9) ILLUSTRATION (a) FIG NO	(b) ITEM NO
		FUNCTIONAL GROUP - 60	BULK MATERIALS		CH-47									
				CONTINUED									BULK	
				DIA,1.353 IN.LG,1.250 IN.GRIP LG										
PA-FZ-Z	5320-937-5443	BACB30AY6W19	81205	RIVET,BLIND-STEEL,CADMIUM.... PLATED,DISHED COUNTERSUNK HEAD,MECHANICALLY EXPANDED, SELF-PLUGGING SHANK W/COLLAR & SLEEVE,3/16 IN. DIA,1.291 IN.LG,1-3/16 IN.GRIP LG	ABC	EA		*	*	*		*		
PA-FZ-Z	5320-937-5444	KB211-6-18	15653	RIVET,BLIND.....	ABC	EA		*	*	*		*		
PA-DZ-Z	5320-945-8174	NAS1465-8	80205	PIN,RIVET-STEEL,PAN HEAD,.... PROTRUDING HEAD,SWAGE LOCKING,CLOSE TOLERANCE, 5/32 IN.DIA,0.688 IN.LG, 0.470 IN.TO 0.531 IN. GRIP LG	ABC	EA						*		
PA-FZ-Z	5320-945-8430	MLSPM4-4	29666	RIVET,BLIND.....	ABC	EA		*	*	*		*		
PA-FZ-Z	5320-945-8444	MLSPM4-3	29666	RIVET,BLIND.....	ABC	EA		*	*	*		*		
XB-FZ-Z		MS20426B7-6	96906	RIVET,SOLID-ALUMINUM ALLOY,.. GR5056-H32,FLAT HEAD,7/32 IN.DIA,3/8 IN.LG,0.047 IN. GRIP LG	ABC	EA								
PA-FZ-Z	5320-952-3849	NAS1097DD6-8	80205	RIVET,SOLID-ALUMINUM ALLOY,.. GR2024-T4,FLUSH SHEAR HEAD,100 DEG,3/16 IN. DIA,0.500 IN.LG	ABC	EA		*	*	*		*		
PA-DZ-Z	5320-954-8501	NAS1399MW5-4	80205	RIVET,BLIND-MONEL,CADMIUM.... PLATED,FLAT HEAD,LOCKED SPINDLE,5/32 IN.DIA,0.388 IN.LG,0.188 IN.TO 0.250 IN. GRIP LG	ABC	EA						*		
PA-FZ-Z	5320-956-5727	NAS1466-29	80205	PIN,RIVET-STEEL,PAN HEAD,.... PROTRUDING HEAD,SWAGE LOCKING,PULL TYPE,CLOSE TOLERANCE,3/16 IN.DIA,2.046 IN.LG,1.782 IN.TO 1.844 IN.GRIP LG	ABC	EA		*	*	*		*		
PA-FZ-Z	5320-965-1764	MS20600M8W4	96906	RIVET,BLIND-MONEL,PULL..... STEM,SELF-PLUGGING, PROTRUDING HEAD,1/4 IN.DIA, 0.188 IN.TO 0.250 IN.GRIP LG,SERRATED STEM	ABC	EA		*	*	*		*		
PA-FZ-Z	5320-966-0362	MLSPM4-1	29666	RIVET,BLIND-STEEL,UNIVERSAL.. HEAD,MECHANICALLY EXPANDED, SELF-PLUGGING SHANK,0.125 IN.DIA,0.167 IN.LG,0.032 IN.TO 0.062 IN.GRIP LG	ABC	EA		*	*	*		*		
PA-FZ-Z	5320-971-7712	MLSPM5-5	29666	RIVET,BLIND-CRES,UNIVERSAL... HEAD,MECHANICALLY EXPANDED,	ABC	EA		*	*	*		*		

(1) SMR CODE	(2) FEDERAL STOCK NUMBER	(3) DESCRIPTION REFERENCE NUMBER & MFR CODE		USABLE ON CODE CH-47	(4) UNIT OF MEAS	(5) QTY INC IN UNIT	(6) 30-DAY DS/GS MAINT ALW (a) 1-20	(b) 21-50	(c) 51-100	(7) 1-YR ALWPER 100 EQUIP CNTGCY	(8) DEPOT MAINT ALWPER 100 EQUIP	(9) ILLUSTRATION (a) FIG NO	(b) ITEM NO
		FUNCTIONAL GROUP - 60	BULK MATERIALS										
			CONTINUED									BULK	
			SELF-PLUGGING SHANK,0.156 IN.DIA,0.440 IN.LG,0.251 IN.TO 0.328 IN.GRIP LG										
PA-FZ-Z	5320-971-7713	MLSPM5-4	29666 RIVET,BLIND-CRES,UNIVERSAL... HEAD,MECHANICALLY EXPANDED, SELF-PLUGGING SHANK,0.156 IN.DIA,0.378 IN.LG,0.188 IN.TO 0.250 IN.GRIP LG	ABC	EA		*	*	*		*		
PA-FZ-Z	5320-971-7721	MLSPM5-6	29666 RIVET,BLIND.....	ABC	EA		*	*	*		*		
PA-FZ-Z	5320-971-7828	NAS1472-16	80205 PIN,RIVET-STEEL,PAN HEAD,.... PROTRUDING HEAD,SWAGE LOCKING,CLOSE TOLERANCE, 3/8 IN.DIA,1.547 IN.LG, 0.970 IN.TO 1.031 IN. GRIP LG	ABC	EA		*	*	*		*		
PA-FZ-Z	5320-971-7843	BACB30CG12-8	81205 PIN,RIVET-STEEL,PAN HEAD..... 0.375 IN.DIA,2.750 IN.LG, 0.500 IN.GRIP LG	ABC	EA		*	*	*		*		
PA-FZ-Z	5320-971-7856	NAS1472-18	80205 PIN,RIVET-STEEL,PAN HEAD,.... PROTRUDING HEAD,SWAGE LOCKING,CLOSE TOLERANCE, 3/8 IN.DIA,1.672 IN.LG	ABC	EA		*	*	*		*		
PA-FZ-Z	5320-971-7894	MLSPM4-5	29666 RIVET,BLIND.....	ABC	EA		*	*	*		*		
PA-FZ-Z	5320-971-7918	MLSPM5-3	29666 RIVET,BLIND-CRES,UNIVERSAL... HEAD,MECHANICALLY EXPANDED, SELF-PLUGGING SHANK W/COLLAR & SLEEVE,5/32 IN. DIA,0.571 IN.LG,0.126 IN. TO 0.187 IN.GRIP LG	ABC	EA		*	*	*		*		
PA-FZ-Z	5320-971-8764	BACB30CG12-20	81205 PIN,RIVET-STEEL,PAN HEAD..... 0.375 IN.DIA,3.250 IN.LG, 1.250 IN.GRIP LG	ABC	EA		*	*	*		*		
PA-FZ-Z	5320-971-8769	BACB30CG12-16	81205 PIN,RIVET-STEEL,PAN HEAD..... 0.375 IN.DIA,3.250 IN.LG, 1 IN.GRIP LG	ABC	EA		*	*	*		*		
PA-FZ-Z	5320-971-8963	BACB30CG12-12	81205 PIN,RIVET-STEEL,PAN HEAD..... 0.375 IN.DIA,3.250 IN. LG,0.750 IN.GRIP LG	ABC	EA		*	*	*		*		
PA-FZ-Z	5320-975-0111	NAS1080R5	80205 COLLAR,RIVET PIN-STEEL,..... CARBON,0.164 IN.ID, 0.280 IN.OD,0.200 IN.LG	ABC	EA		*	*	*		*		
XB-FZ-R		MS20600M8W5	96906 RIVET,BLIND-MONEL,PULL..... STEM,SELF-PLUGGING, PROTRUDING HEAD,1/4 IN.DIA, 0.251 IN.TO 0.312 IN.GRIP LG,SERRATED STEM	ABC	EA								
PA-FZ-Z	5320-982-3842	NAS1525-9	80205 PIN,RIVET-ALUMINUM ALLOY,.... PAN HEAD,PROTRUDING HEAD, SWAGE LOCKING,CLOSE	ABC	EA		*	*	*		*		

(1) SMR CODE	(2) FEDERAL STOCK NUMBER	(3) DESCRIPTION REFERENCE NUMBER & MFR CODE		USABLE ON CODE	(4) UNIT OF MEAS	(5) QTY INC IN UNIT	(6) 30-DAY DS/GS MAINT ALW (a) 1-20	(b) 21-50	(c) 51-100	(7) 1-YR ALWPER 100 EQUIP CNTGCY	(8) DEPOT MAINT ALWPER 100 EQUIP	(9) ILLUSTRATION (a) FIG NO	(b) ITEM NO
		FUNCTIONAL GROUP - 60 BULK MATERIALS		CH-47									
			CONTINUED									BULK	
			TOLERANCE,5/32 IN.DIA, 0.751 IN.LG,0.532 IN.TO 0.594 IN.GRIP LG										
PB-FZ-Z	5320-984-6540	BACB30CCBW5	81205 RIVET,BLIND.....	ABC	EA		*	*	*		*		
PA-FZ-Z	5320-984-7505	NAS1465-10	80205 PIN,RIVET-STEEL,PAN HEAD,.... PROTRUDING HEAD,SWAGE LOCKING,CLOSE TOLERANCE, 5/32 IN.DIA,0.813 IN.LG, 0.595 IN.TO 0.656 IN. GRIP LG	ABC	EA		*	*	*		*		
PA-OZ-Z	5320-989-3171	MS20615-5M4	96906 RIVET,SOLID-MONEL,UNIVERSAL.. HEAD,5/32 IN.DIA,1/4 IN.LG, 0.016 IN.GRIP LG	ABC	EA		*	*	*		*		
PA-DZ-Z	5320-990-5286	MS20427F4-7	96906 RIVET,SOLID-CRES,FLAT HEAD,.. 1/8 IN.DIA,7/16 IN.LG	ABC	LB						*		
PA-OZ-Z	5320-993-7108	MS20615-6M8	96906 RIVET,SOLID-MONEL,UNIVERSAL.. HEAD,3/16 IN.DIA,1/2 IN.LG 0.219 IN.GRIP LG	ABC	EA		*	*	*		*		
PB-HZ-Z	5320-993-7111	MS20615-4M10	96906 RIVET,SOLID-MONEL,UNIVERSAL.. HEAD,1/8 IN.DIA,5/8 IN.LG, 0.437 IN.GRIP LG	ABC	LB		*	*	*		*		
PA-FZ-Z	5320-993-7112	MS20615-4M14	96906 RIVET,SOLID-MONEL,UNIVERSAL.. HEAD,1/8 IN.DIA,7/8 IN.LG, 0.687 IN.GRIP LG	ABC	EA		*	*	*		*		
PA-FZ-Z	5320-993-8805	NAS1465-9	80205 PIN,RIVET-STEEL ALLOY,PAN.... HEAD,PROTRUDING HEAD,SWAGE LOCKING,CLOSE TOLERANCE, 5/32 IN.DIA,0.751 IN.LG, 0.532 IN.TO 0.594 IN.GRIP LG	ABC	EA		*	*	*		*		
PA-FZ-Z	5320-993-8812	WB312-7	76689 RIVET,BLIND-STEEL,CADMIUM.... PLATED,HEX HEAD, MECHANICALLY EXPANDED, SELF-PLUGGING SHANK W/SLEEVE,5/16 IN.DIA,0.594 IN.LG,0.469 IN.GRIP LG	ABC	EA		*	*	*		*		
PA-FZ-Z	5320-993-8813	WB312-4	76689 RIVET,BLIND-STEEL,CADMIUM.... PLATED,HEX HEAD, MECHANICALLY EXPANDED, SELF-PLUGGING SHANK W/SLEEVE,5/16 IN.DIA,0.406 IN.LG,0.281 IN.GRIP LG	ABC	EA		*	*	*		*		
PA-FZ-Z	5320-996-8731	MLSPEU6-3	29666 RIVET,BLIND.....	ABC	EA		*	*	*		*		
PA-FZ-Z	5320-996-9871	MS20600AD6W12	96906 RIVET,BLIND-ALUMINUM ALLOY... GR2117,PULL STEM, SELF-PLUGGING,PROTRUDING HEAD,3/16 IN.DIA,0.688 IN. TO 0.750 IN.GRIP LG, SERRATED STEM	ABC	EA		*	*	*		*		
PA-OZ-Z	5325-017-6414	BACS21DD1	81205 STUD ASSEMBLY.....	ABC	EA		*	*	*		*		

(1) SMR CODE	(2) FEDERAL STOCK NUMBER	(3) DESCRIPTION REFERENCE NUMBER & MFR CODE			USABLE ON CODE	(4) UNIT OF MEAS	(5) QTY INC IN UNIT	(6) 30-DAY DS/GS MAINT ALW (a) 1-20	(b) 21-50	(c) 51-100	(7) 1-YR ALWPER 100 EQUIP CNTGCY	(8) DEPOT MAINT ALWPER 100 EQUIP	(9) ILLUSTRATION (a) FIG NO	(b) ITEM NO
		FUNCTIONAL GROUP - 60	BULK MATERIALS		CH-47									
PA-FZ-Z	5325-045-1875	2700-11S	71286	STUD ASSEMBLY,TURNLOCK..... FASTENER	ABC	EA		*	*	*		*	BULK	
PA-OZ-Z	5325-058-0493	MS35490-2	96906	GROMMET,RUBBER-SYNTHETIC,.... BLACK,SPLIT,1/8 IN.ID,3/4 IN.OD,3/16 IN.H,1/16 IN. GROOVE W,9/16 IN.GROOVE DIA	ABC	EA		*	*	*		*		
PB-FZ-Z	5325-141-4006	AN229-1AS16-1	88044	FASTENER-INTERLOCKING SLIDE.. BRASS,STANDARD NON-LOCKING, NON-SEPARATING,SINGLE ACTION,4 IN.LG	ABC	EA		*	*	*		*		
PA-FZ-Z	5325-171-6366	701	71286	RECEPTACLE,TURNLOCK.....	ABC	EA		*	*	*		*		
PA-FZ-Z	5325-174-2888	AN227-49	88044	CLINCH PLATE,SNAP FASTENER... METAL,7/16 IN.DIA,9/64 IN.H	ABC	EA		*	*	*		*		
PA-OZ-Z	5325-174-2924	AN227-10M	88044	STUD,SNAP FASTENER-BRASS,.... NICKEL PLATED,NO.8-32 NC, 7/16 IN.LG	ABC	EA		*	*	*		*		
PA-OZ-Z	5325-174-5314	MS35489-5	96906	GROMMET,RUBBER-SYNTHETIC,.... BLACK,HOT OIL & COOLANT RESISTANT,3/16 IN.ID,7/8 IN.OD,3/16 IN.H,1/16 IN. GROOVE W,5/8 IN.GROOVE DIA	ABC	EA		*	*	*		*		
PA-FZ-Z	5325-174-5315	MS35489-7	96906	GROMMET,RUBBER-SYNTHETIC,.... BLACK,HOT OIL & COOLANT RESISTANT,1/4 IN.ID,1 IN. OD,1/4 IN.H,1/16 IN.GROOVE W,3/4 IN.GROOVE DIA	ABC	EA		*	*	*		*		
PA-FZ-Z	5325-174-5316	MS35489-2	96906	GROMMET,RUBBER-SYNTHETIC,.... BLACK,HOT OIL & COOLANT RESISTANT,1/8 IN.ID,3/4 IN. OD,3/16 IN.H,1/16 IN.GROOVE W,9/16 IN.GROOVE DIA	ABC	EA		*	*	*		*		
PA-FZ-Z	5325-174-9334	MS35489-120	96906	GROMMET,RUBBER-SYNTHETIC,.... BLACK,HOT OIL & COOLANT RESISTANT,3/4 IN.ID,2 IN. OD,3/8 IN.H,1/16 IN.GROOVE W,1-5/8 IN.GROOVE DIA	ABC	EA		*	*	*		*		
PA-OZ-Z	5325-184-9846	MS35489-10	96906	GROMMET,RUBBER-SYNTHETIC,.... BLACK,HOT OIL & COOLANT RESISTANT,5/16 IN.ID,1 IN. OD,5/16 IN.H,1/16 IN.GROOVE W,3/4 IN.GROOVE DIA	ABC	EA		*	*	*		*		
PA-FZ-Z	5325-185-0001	MS35489-46	96906	GROMMET,RUBBER-SYNTHETIC,.... BLACK,HOT OIL & COOLANT RESISTANT,5/8 IN.ID,1-1/8 IN.OD,3/8 IN.H,1/8 IN. GROOVE W,7/8 IN.GROOVE DIA	ABC	EA		*	*	*		*		
PA-FZ-Z	5325-185-0017	MS35489-33	96906	GROMMET,RUBBER-SYNTHETIC..... BLACK,HOT OIL & COOLANT RESISTANT,3/16 IN.ID,7/16 IN.OD,1/4 IN.H,1/8 IN.	ABC	EA		*	*	*		*		

(1) SMR CODE	(2) FEDERAL STOCK NUMBER	(3) DESCRIPTION REFERENCE NUMBER & MFR CODE		USABLE ON CODE	(4) UNIT OF MEAS	(5) QTY INC IN UNIT	(6) 30-DAY DS GS MAINT ALW (a) 1-20	(b) 21-50	(c) 51-100	(7) 1 YR ALWPER 100 EQUIP CNTGCY	(8) DEPOT MAINT ALWPER 100 EQUIP	(9) ILLUSTRATION (a) FIG NO	(b) ITEM NO
		FUNCTIONAL GROUP - 60 BULK MATERIALS		CH-47									
			CONTINUED										
			GROOVE W,5/16 IN.GROOVE DIA									BULK	
PA-FZ-Z	5325-226-5743	26S22-3	71286 STUD ASSEMBLY,TURNLOCK.....	ABC	EA		*	*	*		*		
PB-FZ-Z	5325-231-6589	MS20230B10	96906 GROMMET,METALLIC-BRASS,..... W/BRASS WASHER,PLAIN TYPE, 0.240 IN.ID,0.546 IN.OD, 0.210 IN.LG	ABC	EA		*	*	*		*		
PA-FZ-Z	5325-262-9184		81349 GROMMET,METALLIC..... MILG16491TY3CLASS1SIZE2	ABC	EA		*	*	*		*		
PA-OZ-Z	5325-263-6648	MS35489-135	96906 GROMMET,RUBBER-SYNTHETIC,.... BLACK,HOT OIL & COOLANT RESISTANT,3/4 IN.ID,1-5/8 IN.OD,1/4 IN.H,1/16 IN. GROOVE W,1-1/4 IN.GROOVE DIA	ABC	EA		*	*	*		*		
PA-FZ-Z	5325-275-4509	AN227-52	88044 POST,SNAP FASTENER,METAL,.... 15/32 IN.DIA,13/64 IN.H	ABC	EA		*	*	*		*		
PA-OZ-Z	5325-276-4918	MS27977-29N	96906 STUD,SNAP FASTENER-BRASS,.... NICKEL PLATED,HEX BASE, NO.8-32 NC	ABC	EA		*	*	*		*		
PA-FZ-Z	5325-276-4924	AN227-51	88044 STUD,SNAP FASTENER-METAL,.... 15/32 IN.DIA,9/64 IN.H	ABC	EA		*	*	*		*		
PA-OZ-Z	5325-276-4961	MS27977-2N	96906 SOCKET,SNAP FASTENER-BRASS,.. NICKEL PLATED,PHOSPHOR BRONZE SPRING,3/4 IN.W,7/8 IN.LG,3/8 IN.H	ABC	EA		*	*	*		*		
PA-FZ-Z	5325-276-4970	MS27982-2N	96906 SOCKET,SNAP FASTENER-BRASS,.. NICKEL PLATED,15/32 IN.DIA, 3/32 IN.H	ABC	EA		*	*	*		*		
PA-FZ-Z	5325-276-5867	AN227-22B	88044 STUD,SNAP FASTENER-BRASS,.... BLACK FINISH,HEX BASE,1/4 IN.POST H,NO.8-32 NC,7/8 IN.LG	ABC	EA		*	*	*		*		
PA-FZ-Z	5325-276-6343	MS35489-23	96906 GROMMET,RUBBER-SYNTHETIC,.... BLACK,HOT OIL & COOLANT RESISTANT,1 IN.ID,1-3/4 IN. OD,7/16 IN.H,1/16 IN.GROOVE W,1-3/8 IN.GROOVE DIA	ABC	EA		*	*	*		*		
PA-OZ-Z	5325-281-3538	BACS21AR1	81205 STUD,TURNBUTTON FASTENER..... BRASS BODY,STEEL SPRING, NICKEL PLATED FINISH,0.470 IN.W,1-1/4 IN.LG,0.690 IN. H,1/2 IN.W OF BUTTON,0.310 IN.THK OF BUTTON	ABC	EA		*	*	*		*		
PA-FZ-Z	5325-282-2047	BM4002-0	71286 EYELET,TURNLOCK FASTENER..... STEEL,0.358 IN.ID,0.625 IN.OD COMP	ABC	EA		*	*	*		*		
PA-FZ-Z	5325-282-7458	2600-2W	71286 STUD ASSEMBLY,TURNLOCK..... FASTENER-STEEL,CADMIUM PLATED,STUD HEAD,0.089 IN.	ABC	EA		*	*	*		*		

(1) SMR CODE	(2) FEDERAL STOCK NUMBER	(3) DESCRIPTION REFERENCE NUMBER & MFR CODE		USABLE ON CODE CH-47	(4) UNIT OF MEAS	(5) QTY INC IN UNIT	(6) 30-DAY DS/GS MAINT ALW (a) 1-20	(b) 21-50	(c) 51-100	(7) 1-YR ALWPER 100 EQUIP CNTGCY	(8) DEPOT MAINT ALWPER 100 EQUIP	(9) ILLUSTRATION (a) FIG NO	(b) ITEM NO
		FUNCTIONAL GROUP - 60	BULK MATERIALS									BULK	
			CONTINUED THK OF MATERIAL ACCOMMODATED,0.587 IN.LG										
PA-OZ-Z	5325-285-6264	AN227-218	88044 STUD,SNAP FASTENER-BRASS..... BODY,STEEL SHANK,BLACK FINISH,HEX BASE,NO.8-32 NC, 3/4 IN.LG	ABC	EA		*	*	*		*		
PA-FZ-Z	5325-290-3976	244-16	71286 RECEPTACLE,TUBE.....	ABC	EA		*	*	*		*		
PA-OZ-Z	5325-290-6163	MS35489-13	96906 GROMMET,RUBBER-SYNTHETIC,.... BLACK,HOT OIL & COOLANT RESISTANT,7/16 IN.ID,15/16 IN.OD,5/16 IN.H,1/16 IN. GROOVE W,11/16 IN.GROOVE DIA	ABC	EA		*	*	*		*		
PA-OZ-Z	5325-291-0289	MS202308S2	96906 GROMMET,METALLIC-BRASS,..... PLAIN,NO.2 SIZE,0.425 IN. ID,0.532 IN.OD,0.070 IN.THK	ABC	EA		*	*	*		*		
PA-FZ-Z	5325-359-6854	BS78403	83058 SOCKET,TURNBUTTON FASTENER...	ABC	EA		*	*	*		*		
PA-FZ-Z	5325-449-2797	4002G	71286 EYELET,TURNLOCK FASTENER..... STEEL,CADMIUM PLATED,11/32 IN.ID,5/8 IN.OD,3/16 IN.H	ABC	EA		*	*	*		*		
C PA-FZ-Z	5325-449-3006	HZA004-001	93190 LOCKSPRING,TURNLOCK.....	ABC	EA		*	*	*		*		
PA-FZ-Z	5325-530-9021	NAS557-32B	80205 GROMMET,PLASTIC-NYLON,SPLIT,2 IN.INSTALLED ID,0.312 IN.H, FOR INSTALLATION IN A 2-1/8 IN.DIA HOLE IN A 0.064 IN. TO 0.081 IN.THK SHEET	ABC	EA		*	*	*		*		
PA-OZ-Z	5325-534-8487	MS35489-95	96906 GROMMET,RUBBER-SYNTHETIC,.... BLACK,HOT OIL & COOLANT RESISTANT,1/4 IN.ID,1-1/4 IN.OD,7/16 IN.H,1/4 IN. GROOVE W,1 IN.GROOVE DIA	ABC	EA		*	*	*		*		
N XB-OZ-Z		AN227-23M10	88044 STUD,SNAP FASTENER-BRASS,.... NICKEL-PLATED	ABC	EA								
PA-FZ-Z	5325-639-4277	XX78323K1105	61864 STUD,TURNBUTTON FASTENER.....	ABC	EA		*	*	*		*		
PA-FZ-Z	5325-646-7300	2700-6S	71286 STUD ASSEMBLY,TURNLOCK..... FASTENER	ABC	EA		*	*	*		*		
PA-FZ-Z	5325-684-9535	214-16N	71286 RECEPTACLE,TURNLOCK FASTENER.	ABC	EA		*	*	*		*		
PA-OZ-Z	5325-689-8837	26S8-2	71286 STUD ASSEMBLY,TURNLOCK..... FASTENER	ABC	EA		*	*	*		*		
PA-FZ-Z	5325-703-1451	2600E2S	71286 EJECTOR SPRING,TURN.....	ABC	EA		*	*	*		*		
PA-FZ-Z	5325-720-6300	MS35490-39	96906 GROMMET,RUBBER-SYNTHETIC,.... BLACK,SPLIT,9/16 IN.ID, 1-1/16 IN.OD,3/8 IN.H,1/8 IN.GROOVE W,13/16 IN GROOVE DIA	ABC	EA		*	*	*		*		
PA-OZ-Z	5325-754-2240	MS35490-11	96906 GROMMET,RUBBER-SYNTHETIC,.... BLACK,SPLIT,3/8 IN.ID,7/8 IN.OD,5/16 IN.H,1/16 IN. GROOVE W,5/8 IN.GROOVE DIA	ABC	EA		*	*	*		*		
PA-FZ-Z	5325-787-8677	2700-7S	71286 STUD ASSEMBLY,TURNLOCK.....	ABC	EA		*	*	*		*		

(1) SMR CODE	(2) FEDERAL STOCK NUMBER	(3) DESCRIPTION — REFERENCE NUMBER & MFR CODE			USABLE ON CODE	(4) UNIT OF MEAS	(5) QTY INC IN UNIT	(6) 30-DAY DS/GS MAINT ALW (a) 1-20	(b) 21-50	(c) 51-100	(7) 1-YR ALWPER 100 EQUIP CNTGCY	(8) DEPOT MAINT ALWPER 100 EQUIP	(9) ILLUSTRATION (a) FIG NO	(b) ITEM NO
		FUNCTIONAL GROUP - 60	BULK MATERIALS		CH-47									
				CONTINUED										
				FASTENER									BULK	
PB-FZ-Z	5325-805-6793	AN229-2AS48-1	88044	FASTENER INTERLOCKING SLIDE.. BRASS,MEDIUM SERVICE, NON-SEPARATING,SINGLE ACTION,STANDARD NON-LOCKING 12 IN.LG	ABC	EA		*	*	*		*		
PA-FZ-Z	5325-810-7708	MS20230WBS2	96906	GROMMET-BRASS,SPUR TYPE,0.512 IN.ID,0.890 IN.OD,0.156 IN. H	ABC	EA		*	*	*		*		
PA-FZ-Z	5325-827-1378	8ACR11X1C	77272	RECEPTACLE,TURNLOCK FASTENER.	ABC	EA		*	*	*		*		
PA-FZ-Z	5325-853-9713	8ACE10E1	81205	SOCKET,TURNBUTTON.....	ABC	EA		*	*	*		*		
PA-FZ-Z	5325-854-2183	26S37-20	71286	STUD ASSEMBLY,TURNLOCK.....	ABC	EA		*	*	*		*		
PA-OZ-Z	5325-854-9376	MS35490-30	96906	GROMMET,RUBBER-SYNTHETIC,.... 1/4 IN.ID,1 IN.OD,5/16 IN. THK	ABC	EA		*	*	*		*		
PA-OZ-Z	5325-868-8471	40S28-12-122A	71285	STUD,PLAIN.....	ABC	EA		*	*	*		*		
PB-OZ-Z	5325-894-2588	GT1-8PAC	20060	GROMMET,TAPE.....	ABC	EA		*	*	*		*		
PA-OZ-Z	5325-948-0473	MS35490-18	96906	GROMMET,RUBBER-SYNTHETIC,.... BLACK,SPLIT,5/8 IN.ID,1-1/2 IN.OD,1/4 IN.H,1/16 IN. GROOVE W,1-1/4 IN.GROOVE DIA	ABC	EA		*	*	*		*		
PB-FZ-Z	5325-948-3209	AN229-2AS16-1	88044	FASTENER,INTERLOCKING SLIDE.. BRASS,MEDIUM SERVICE, NON-SEPARATING,SINGLE ACTION,STANDARD NON-LOCKING 12 IN.LG	ABC	EA		*	*	*		*		
PB-FZ-Z	5325-948-3210	AN229-2AS80-1	88044	FASTENERS,INTERLOCKING SLIDE. BRASS,MEDIUM SERVICE, NON-SEPARATING,SINGLE ACTION,STANDARD NON-LOCKING 20 IN.LG	ABC	EA		*	*	*		*		
PB-FZ-Z	5325-948-3211	AN229-2AS22-1	88044	FASTENERS,INTERLOCKING SLIDE. BRASS,MEDIUM SERVICE, NON-SEPARATING,SINGLE ACTION,STANDARD NON-LOCKING 5-1/2 IN.LG	ABC	EA		*	*	*		*		
PB-FZ-Z	5325-948-3212	AN229-2AS171-1	88044	FASTENERS,INTERLOCKING SLIDE. BRASS,MEDIUM SERVICE, NON-SEPARATING,SINGLE ACTION,STANDARD NON-LOCKING 42-3/4 IN.LG	ABC	EA		*	*	*		*		
PA-FZ-Z	5325-952-4076	BACR11X1DK	77272	RECEPTACLE,TURNLOCK FASTENER.	ABC	EA		*	*	*		*		
PA-OZ-Z	5325-960-2410	MS21266-1N	96906	GROMMET,PLASTIC,EDGING-NYLON. 0.150 IN.W,0.155 IN.H, 12.750 IN.LG COMP	ABC	EA		*	*	*		*		
PA-OZ-Z	5325-986-6123	26S8-11	71286	STUD ASSEMBLY,TURNLOCK..... FASTENER-STEEL,CADMIUM PLATED,FILLISTER HEAD,	ABC	EA		*	*	*		*		

(1) SMR CODE	(2) FEDERAL STOCK NUMBER	(3) DESCRIPTION — REFERENCE NUMBER & MFR CODE		USABLE ON CODE	(4) UNIT OF MEAS	(5) QTY INC IN UNIT	(6) 30-DAY DS/GS MAINT ALW (a) 1-20	(b) 21-50	(c) 51-100	(7) 1YR ALWPER 100 EQUIP CNTGCY	(8) DEPOT MAINT ALWPER 100 EQUIP	(9) ILLUSTRATION (a) FIG NO	(b) ITEM NO
		FUNCTIONAL GROUP - 60 BULK MATERIALS										BULK	
				CONTINUED									
				RECESSED HEAD,0.246 IN.DIA, 0.840 IN.LG,0.320 IN. EFFECTIVE LG OF EYELET									
PA-FZ-Z	5330-051-7034	CAP2171	92798	PACKING,COMPRESSED.....	ABC	IN		*	*	*		*		
PA-FZ-Z	5330-054-1450		81349	CORK AND RUBBER..... MILC6183-1-32CL2	ABC	EA		*	*	*		*		
PA-OZ-Z	5330-182-1288		81349	CORK AND RUBBER SHEET-18..... IN.W,36 IN.LG,1/16 IN.THK, MIL-G-6183	ABC	SI		*	*	*		*		
PC-FZ-Z	5330-248-3832	MS29513-007	96906	PACKING,PREFORMED-RUBBER,.... SYNTHETIC,0.145 IN.ID,0.285 IN.OD,0.070 IN.THK	ABC	EA		*	*	*		*		
PC-DZ-Z	5330-248-3834	MS29513-009	96906	PACKING,PREFORMED-RUBBER,.... SYNTHETIC,0.208 IN.ID,0.348 IN.OD,0.070 IN.THK	ABC	EA						*		
PC-DZ-Z	5330-248-3838	MS29513-013	96906	PACKING,PREFORMED-RUBBER,.... SYNTHETIC,0.426 IN.ID,0.566 IN.OD,0.070 IN.THK	ABC	EA		*	*	*		*		
PC-OZ-Z	5330-248-3849	MS29513-019	96906	PACKING,PREFORMED-RUBBER,.... SYNTHETIC,0.801 IN.ID,0.941 IN.OD,0.070 IN.THK	ABC	EA		*	*	*		*		
PC-OZ-Z	5330-265-1076	MS29513-126	96906	PACKING,PREFORMED-RUBBER,.... SYNTHETIC,1.362 IN.ID,1.568 IN.OD,0.103 IN.THK	ABC	EA		*	*	*		*		
PA-FZ-Z	5330-270-8467	HHP96TYICLA-010-36-36	81348	PAPER,GASKET-COMP.....	ABC	SY		*	*	*		*		
PA-FZ-Z	5330-485-4340	31185	83612	GASKET,NONMETALLIC-NEOPRENE.. RUBBER,SYNTHETIC,0.471 IN. ID,0.812 IN.OD,0.250 IN.THK	ABC	EA		*	*	*		*		
PC-FZ-Z	5330-527-8522	MS29513-145	96906	PACKING,PREFORMED-RUBBER,.... SYNTHETIC,2.550 IN.ID,2.756 IN.OD,0.103 IN.THK	ABC	EA		*	*	*		*		
PC-DZ-Z	5330-530-1998	AN6227B87	88044	PACKING,PREFORMED-RUBBER,.... SYNTHETIC,15-1/2 IN.ID,16 IN.OD,1/4 IN.THK	ABC	EA						*		
PA-FZ-Z	5330-530-4341	MS28932-1	96906	PACKING MATERIAL-FELT,SOLID.. TYPE,0.125 IN.THK,0.188 IN. W,60 IN.LG,END SCARFED AT 45 DEG ANGLE TO PROVIDE MATING ENDS COMP	ABC	IN		*	*	*		*		
C PA-OZ-Z	5330-550-6742	MS9058-08	96906	RETAINER,PACKING-PLASTIC..... 0.656 IN.ID,0.906 IN.OD, 0.061 IN.THK,FOR 1/2 IN.OD TUBE	ABC	EA		*	*	*		*		
PC-DZ-Z	5330-550-6753	MS9021-113	96906	PACKING,PREFORMED-SYNTHETIC.. RUBBER,0.549 IN.ID, 0.755 IN.OD	ABC	EA						*		
PC-FZ-Z	5330-558-1105	MS9021-036	96906	PACKING,PREFORMED-RUBBER,.... SYNTHETIC,2.354 IN.ID,	ABC	EA		*	*	*		*		

(1) SMR CODE	(2) FEDERAL STOCK NUMBER	(3) DESCRIPTION REFERENCE NUMBER & MFR CODE		USABLE ON CODE	(4) UNIT OF MEAS	(5) QTY INC IN UNIT	(6) 30-DAY DS/GS MAINT ALW (a) 1-20	(b) 21-50	(c) 51-100	(7) 1-YR ALWPER 100 EQUIP CNTGCY	(8) DEPOT MAINT ALWPER 100 EQUIP	(9) ILLUSTRATION (a) FIG NO	(b) ITEM NO
		FUNCTIONAL GROUP - 60	BULK MATERIALS	CH-47									
			CONTINUED										
N PC-HZ-Z	5330-579-1070	MS28775-330	96906 2.520 IN.OD,0.073 IN.THK PACKING,PREFORMED-SYNTHETIC.. RUBBER,2.100 IN.ID,2.520 IN.OD,0.210 IN.THK	ABC	EA		*	*	*		*	BULK	
PB-FZ-Z	5330-579-7927	MS28775-225	96906 PACKING,PREFORMED-SYNTHETIC.. RUBBER,1.849 IN.ID,2.137 IN.OD,0.143 IN.THK	ABC	EA		*	*	*		*		
PC-OZ-Z	5330-582-2578	220298	77445 PACKING,PREFORMED.....	ABC	EA		*	*	*		*		
PC-FZ-Z	5330-582-2856	MS9020-08	96906 PACKING,PREFORMED-RUBBER,.... SYNTHETIC,0.639 IN.ID,0.500 IN.OD,0.090 IN.THK	ABC	EA		*	*	*		*		
N PC-DZ-Z	5330-584-1231	MS9021-016	96906 PACKING,PREFORMED-SYNTHETIC.. RUBBER,0.676 IN.ID,0.692 IN.OD,0.067 IN.THK	ABC	EA						*		
PC-DZ-Z	5330-641-0693	AN622784	88044 PACKING,PREFORMED-SYNTHETIC.. RUBBER,7/32 IN.ID,11/32 IN. OD,1/16 IN.THK	ABC	EA						*		
PC-OZ-Z	5330-682-4743	MS29561-006	96906 PACKING,PREFORMED-RUBBER,.... SYNTHETIC,0.114 IN.ID,0.260 IN.OD,0.070 IN.THK	ABC	EA		*	*	*		*		
PC-OZ-Z	5330-725-4025	MS29561-267	96906 PACKING,PREFORMED-RUBBER,.... SYNTHETIC,BLACK,8.234 IN. ID,8.518 IN.OD,0.139 IN.THK	ABC	EA						*		
PC-FZ-Z	5330-727-6160	MS9021-039	96906 PACKING,PREFORMED-RUBBER,.... SYNTHETIC,2.724 IN.ID,2.900 IN.OD,0.073 IN.THK	ABC	EA		*	*	*		*		
PA-OZ-Z	5330-759-0785	VS80567-7	77272 GASKET-COMP.....	ABC	EA		*	*	*		*		
PA-OZ-Z	5330-759-0786	VS80567-1	77272 GASKET-COMP.....	ABC	EA		*	*	*		*		
PA-OZ-Z	5330-762-0060	VS80550-2	77272 SEAL,RUBBER,SPECIAL SHAPED... SECTION	ABC	EA		*	*	*		*		
PA-OZ-Z	5330-767-0418	VS80542N100-7200	77272 PACKING MATERIAL-ALUMINUM.... ALLOY RETAINER,SAIL CLOTH JACKET,SPONGE CORE,SPONGE WOVEN COVERING,NO LUBRICATION OR FRICTION TREATMENT,5/8 IN.W,72 IN. LG,1/4 IN.THK,1 HOLE 0.280 IN.DIA THRU CLOTH & SPONGE, 1 HOLE 0.094 IN.THRU CLOTH & RETAINER ON OPPOSITE SIDE,2.500 IN.APART COMP	ABC	EA		*	*	*		*		
PA-OZ-Z	5330-782-1179	VS80543	77272 PACKING MATERIAL-ALUMINUM.... ALLOY RETAINER,SILICONE SPONGE & INNER SURFACE, DACRON CLOTH OUTER COVERING,0.880 IN.W,0.200 IN.THK,0.400 IN.DIA HOLE & SPACED 2.500 IN.FROM CENTER TO CENTER	ABC	EA		*	*	*		*		
PB-OZ-Z	5330-793-6902	BACS11W4C	77272 PACKING WITH RETAINER-CRES,..	ABC	EA		*	*	*		*		

(1) SMR CODE	(2) FEDERAL STOCK NUMBER	(3) DESCRIPTION / REFERENCE NUMBER & MFR CODE			USABLE ON CODE CH-47	(4) UNIT OF MEAS	(5) QTY INC IN UNIT	(6) 30-DAY DS/GS MAINT ALW (a) 1-20	(b) 21-50	(c) 51-100	(7) 1-YR ALWPER 100 EQUIP CNTGCY	(8) DEPOT MAINT ALWPER 100 EQUIP	(9) ILLUSTRATION (a) FIG NO	(b) ITEM NO
		FUNCTIONAL GROUP - 60 BULK MATERIALS											BULK	
				CONTINUED SYNTHETIC RUBBER PACKING RING,0.239 IN.ID,0.531 IN. OD										
PC-FZ-Z	5330-805-8688	MS9021-042	96906	PACKING,PREFORMED-RUBBER..... SYNTHETIC,3.224 IN.ID,3.376 IN.OD,0.073 IN.H	ABC	EA		*	*	*		*		
PA-DZ-Z	5330-808-0087	MS29561-120	96906	PACKING,PREFORMED-RUBBER,..... SYNTHETIC,0.987 IN.ID,1.193 IN.OD,0.103 IN.THK	ABC	EA						*		
PB-FZ-Z	5330-822-0991	MS28774-124	96906	RETAINER,PACKING..... TETRAFLUOROETHYLENE,0.085 IN.ID,1.270 IN.OD,0.045 IN. THK	ABC	EA		*	*	*		*		
PC-HZ-Z	5330-826-9923	MS29561-125	96906	PACKING,PREFORMED-RUBBER,..... SYNTHETIC,1.299 IN.ID, 1.511 IN.OD,0.103 IN.THK	ABC	EA		*	*	*		*		
N PC-FZ-Z	5330-833-1429	MS28775-137	96906	PACKING,PREFORMED-SYNTHETIC.. RUBBER,0.10 ID,0.016 OD, 0.103 IN.THK	ABC	EA		*	*	*		*		
PA-FZ-Z	5330-853-6655	MS29561-243	96906	PACKING,PREFORMED-SYNTHETIC.. RUBBER,4.109 IN.ID,4.387 IN.OD,0.139 IN.THK	ABC	EA		*	*	*		*		
PA-QZ-Z	5330-855-3430	MS28774-023	96906	RETAINER,PACKING.....	ABC	EA		*	*	*		*		
PA-QZ-Z	5330-871-7859	AMS3195062X24X24	81343	RUBBER SHEET,CELLULAR-COMP...	ABC	EA		*	*	*		*		
N PA-QZ-Z	5330-872-4487	80320-2-75	10417	TAPE,PILE.....	ABC	EA		*	*	*		*		
PA-FZ-Z	5330-914-9905		81349	CORK AND RUBBER SHEET..... SYNTHETIC,1/16 IN.THK,36 IN.W,MIL-C-6183,TYPE 2, CLASS 1,GRADE A	ABC	EA								
PA-DZ-Z	5330-928-9040	164131	62983	GASKET-PAPER,1.260 IN.DIA.... OF APERTURE,1.510 IN.OD, 0.065 IN.THK	ABC	EA						*		
PA-DZ-Z	5330-943-0901	164129	62983	GASKET-LEATHER..... VELLUMOID,0.771 IN.ID,1.073 IN.OD,0.065 IN.THK	ABC	EA						*		
PA-QZ-Z	5330-959-6261	VS80567-3	77272	GASKET.....	ABC	EA		*	*	*		*		
XB-QZ-Z		VS80550-1	77272	SEAL,PLAIN ENCASED.....	ABC	EA								
PA-QZ-Z	5340-010-3090	MS21256-2	96906	CLIP,LOCKING,TURNBUCKLE..... CRES,2 IN.LG	ABC	EA		*	*	*		*		
PA-FZ-Z	5340-043-3723	MS20253P2-7200	96906	ROD,STRAIGHT HEADLESS..... CRES,0.089 IN.DIA,72 IN.LG COMP	ABC	EA		*	*	*		*		
PA-FZ-Z	5340-043-3724	MS20253P4-7200	96906	ROD,STRAIGHT,HEADLESS-CRES,.. CADMIUM PLATED,0.179 IN. DIA,72 IN.LG COMP	ABC	EA		*	*	*		*		
PA-FZ-Z	5340-051-1410	MS17987C306	96906	PIN,QUICK RELEASE-CRES,0.187. IN.DIA,0.600 IN.GRIP LG	ABC	EA		*	*	*		*		
XB-QZ-Z		NAS43HT5-18	80205	SPACER,SLEEVE-STEEL ALLOY,...	ABC	EA								

(1) SMR CODE	(2) FEDERAL STOCK NUMBER	(3) DESCRIPTION REFERENCE NUMBER & MFR CODE		USABLE ON CODE	(4) UNIT OF MEAS	(5) QTY INC IN UNIT	(6) 30-DAY DS/GS MAINT ALW (a) 1-20	(b) 21-50	(c) 51-100	(7) 1-YR ALW PER 100 EQUIP CNTGCY	(8) DEPOT MAINT ALW PER 100 EQUIP	(9) ILLUSTRATION (a) FIG NO	(b) ITEM NO
		FUNCTIONAL GROUP - 60	BULK MATERIALS	CH-47									
			CONTINUED									BULK	
			CADMIUM PLATED,0.320 IN.ID, 0.448 IN.OD,9/32 IN.LG										
PA-OZ-Z	5365-057-4555	NAS42HT8-14	80205 SPACER,SLEEVE-STEEL ALLOY,...	ABC	EA		*	*	*		*		
			CADMIUM PLATED,0.256 IN.ID, 0.448 IN.OD,7/32 IN.LG										
PA-OZ-Z	5365-057-8252	NAS43HT4-12	80205 SPACER,SLEEVE-STEEL ALLOY,...	ABC	EA		*	*	*		*		
			CADMIUM PLATED,0.256 IN.ID, 0.385 IN.OD,3/16 IN.LG										
PA-DZ-Z	5340-063-5446	NAS816-123	80205 CAP-PLUG,PROTECTIVE,DUST AND.	ABC	EA						*		
			MOIITURE SEAL-VIRGIN POLYETHYENE,1.312 IN.ID OPEN END,1.237 IN.DIA CLOSED END										
XB-OZ-Z		NAS42HT8-72	80205 SPACER,SLEEVE-STEEL ALLOY,...	ABC	EA								
			CADMIUM PLATED,0.256 IN.ID, 0.448 IN.OD,1-1/8 IN.LG										
PA-DZ-Z	5340-067-6322	MS9101-06	96906 BRACKET,ANGLE-CRES,90 DEG,...	ABC	EA						*		
			1/2 IN.W,1-1/2 IN.LG ONE LEG,3/4 IN.LG OTHER LEG, 0.068 IN.THK,2 HOLES,ONE IN EACH LEG,0.200 IN.W BY 0.278 IN.LG										
PA-OZ-Z	5340-068-4378	MS20253-2-3600	96906 ROD,STRAIGHT,HEADLESS-CRES,...	ABC	EA		*	*	*		*		
			PASSIVATED FINISH,0.089 IN. DIA,36 IN. LG COMP										
XB-FZ-Z		NAS1358DS7S07D	80205 PIN,QUICK RELEASE-STEEL.....	ABC	EA								
			BODY,HEAD & PULL RING, W/PUSH BUTTON RELEASE										
N PA-FZ-Z	5340-104-7582		MECHANISM,1/2 IN.SHANK DIA										
			96906 CLAMP,LOOP-STEEL,CARBON.....	ABC	EA		*	*	*		*		
			W/SYNTHETIC RUBBER FUEL RESISTANT CUSHION,1 IN.LOOP ID,1/2 IN.W,0.032 IN.THK, 0.204 IN.HOLE DIA,FOR 1 IN. OD TUBE										
PA-OZ-Z	5340-133-1974	MS20253P5-7200	96906 ROD,STRAIGHT,HEADLESS-CRES...	ABC	EA		*	*	*		*		
			PASSIVATED FINISH,0.129 IN. DIA,72 IN.LG COMP										
PA-HZ-Z	5340-134-4068	294055RET	76530 RETAINER,NUT AND BOLT.....	ABC	EA		*	*	*		*		
PA-HZ-Z	5340-134-4069	2752-080RET	72962 RETAINER,NUT AND BOLT.....	ABC	EA		*	*	*		*		
PA-FZ-Z	5340-181-1359	6820S048	56878 RETAINER,NUT AND BOLT.....	ABC	EA		*	*	*		*		
PA-OZ-Z	5340-193-0117	AN735D2	88044 CLAMP,LOOP.....	ABC	EA		*	*	*		*		
PA-HZ-Z	5340-200-7224	MS21208C4-10	96906 INSERT,SCREW THREAD-CRES,....	ABC	EA		*	*	*		*		
			1/4 IN.-20 NC,1/4 IN.LG										
PA-FZ-Z	5340-200-7451	MS21919WDG17	96906 CLAMP,LOOP-ALUMINUM ALLOY,...	ABC	EA		*	*	*		*		
			1.063 IN.LOOP ID										
XB-FZ-Z		NAS1356DS7S27D	80205 PIN,QUICK RELEASE-STEEL.....	ABC	EA								
			BODY,HEAD AND PULL RING, W/PUSH BUTTON RELEASE										

(1) SMR CODE	(2) FEDERAL STOCK NUMBER	(3) DESCRIPTION REFERENCE NUMBER & MFR CODE			USABLE ON CODE CH-47	(4) UNIT OF MEAS	(5) QTY INC IN UNIT	(6) 30-DAY DS GS MAINT ALW (a) 1-20	(b) 21-50	(c) 51-100	(7) 1YR ALWPER 100 EQUIP CNTGCY	(8) DEPOT MAINT ALWPER 100 EQUIP	(9) ILLUSTRATION (a) FIG NO	(b) ITEM NO
		FUNCTIONAL GROUP - 60 BULK MATERIALS											BULK	
				CONTINUED										
				MECHANISM,0.375 IN.SHANK DIA										
XB-FZ-Z		NAS1358DS7S08D	80205	PIN,QUICK RELEASE-STEEL..... BODY,HEAD & PULL RING, W/PUSH BUTTON RELEASE MECHANISM,1/2 IN.SHANK DIA	ABC	EA								
XB-FZ-Z		NAS1358DS7S20D	80205	PIN,QUICK RELEASE-STEEL..... CADMIUM PLATED,2 CRES LOCKING ELEMENTS,PASSIVATED FINISH,W/ATTACHING PULL RING,DOUBLE ACTION,W/DRIVE OUT FEATURE,0.940 IN.HEAD DIA,1/2 IN.BODY DIA,2 IN. GRIP LG	ABC	EA								
XB-FZ-Z		NAS1356DS7S25D	80205	PIN,QUICK RELEASE-STEEL..... BODY,HEAD & PULL RING, W/PUSH BUTTON RELEASE MECHANISM,3/8 IN.SHANK DIA	ABC	EA								
XB-FZ-Z		NAS1354DS7S5D	80205	PIN,QUICK RELEASE-STEEL..... BODY,HEAD & PULL RING, W/PUSH BUTTON RELEASE MECHANISM,1/4 IN.SHANK DIA	ABC	EA								
XB-FZ-Z		NAS1360DS7S07D	80205	PIN,QUICK RELEASE-STEEL..... DOUBLE ACTION,W/ATTACHING PULL RING,W/DRIVE OUT FEATURE,1.050 IN.HEAD DIA, 0.624 IN.BODY DIA,0.700 IN.GRIP LG	ABC	EA								
PA-FZ-Z	5340-285-7918	MS27976-12	96906	CLEVIS,ROD END-STEEL NARROW.. FORK,0.281 IN.HOLE DIA, 1 IN.LG	ABC	EA		*	*	*		*		
PB-HZ-Z	5340-286-6600	MS21208F4-10	96906	INSERT,SCREW THREAD-CRES,.... 1/4 IN.-28 NF,1/4 IN.LG	ABC	EA		*	*	*		*		
PA-FZ-Z	5340-286-9421	MS21919WDG13	96906	CLAMP,LOOP-ALUMINUM ALLOY,... W/SYNTHETIC RUBBER WEDGE TYPE CUSHION,0.813 IN.LOOP ID,1/2 IN.W,0.050 IN.THK, 0.204 IN.HOLE DIA,FOR 13/16 IN.OD TUBE	ABC	EA		*	*	*		*		
PA-FZ-Z	5340-286-9424	MS21919WDG14	96906	CLAMP,LOOP-ALUMINUM ALLOY,... W/SYNTHETIC RUBBER WEDGE TYPE CUSHION,0.875 IN.LOOP ID,1/2 IN.W,0.050 IN.THK, 0.204 IN.HOLE DIA,FOR 7/8 IN.OD TUBE	ABC	EA		*	*	*		*		
PA-FZ-Z	5340-290-0808	AN735-15	88044	CLAMP,LOOP-ALUMINUM ALLOY,... 0.938 IN.DIA	ABC	EA		*	*	*		*		
PA-FZ-Z	5340-290-4532	NAS451-56	80205	BUTTON,PLUG.....	ABC	EA		*	*	*		*		
PA-FZ-Z	5340-291-5322	MS21919WDG3	96906	CLAMP,LOOP-ALUMINUM ALLOY,...	ABC	EA		*	*	*		*		

(1) SMR CODE	(2) FEDERAL STOCK NUMBER	(3) DESCRIPTION REFERENCE NUMBER & MFR CODE		USABLE ON CODE	(4) UNIT OF MEAS	(5) QTY INC IN UNIT	(6) 30-DAY DS/GS MAINT ALW (a) 1-20	(b) 21-50	(c) 51-100	(7) 1-YR ALWPER 100 EQUIP CNTGCY	(8) DEPOT MAINT ALWPER 100 EQUIP	(9) ILLUSTRATION (a) FIG NO	(b) ITEM NO
		FUNCTIONAL GROUP - 60 BULK MATERIALS		CH-47									
			CONTINUED									BULK	
			W/SYNTHETIC RUBBER WEDGE TYPE CUSHION,0.188 IN.LOOP ID,1/2 IN.W,0.032 IN.THK, 0.204 IN.HOLE DIA,FOR 3/16 IN.OD TUBE										
PA-FZ-Z	5340-291-5353	MS21919WDG2	96906 CLAMP,LOOP-ALUMINUM ALLOY,...	ABC	EA		*	*	*		*		
			W/SYNTHETIC RUBBER WEDGE TYPE CUSHION,0.125 IN.LOOP ID,1/2 IN.W,0.032 IN.THK, 0.204 IN.HOLE DIA,FOR 1/8 IN.OD TUBE										
PB-OZ-Z	5340-329-1676	49245	61864 BAND,WIRE HARNESS.....	ABC	EA		*	*	*		*		
PA-OZ-Z	5365-337-2848	NAS43DD3-10	80205 SPACER,SLEEVE-ALUMINUM ALLOY, ANODIZED,0.194 IN.ID,0.322 IN.OD,5/32 IN.LG	ABC	EA		*	*	*		*		
PB-OZ-Z	5340-345-5022	676-3-8FR	83930 STRAP ASSEMBLY,HARNESS.....	ABC	EA		*	*	*		*		
PA-OZ-Z	5340-433-3269	NAS15-8A	80205 PLUG,PROTECTIVE,DUST AND..... MOISTURE SEAL-VIRGIN POLYETHYLENE,3/4 IN.-16 NF, FOR 1/2 IN.TUBE COMP	ABC	EA		*	*	*		*		
PA-FZ-Z	5340-454-0387	MS17987C430	96906 PIN,QUICK RELEASE-CRES..... W/ATTACHING PULL RING, SINGLE ACTION,0.530 IN.HEAD DIA,1/4 IN.BODY DIA,3 IN. GRIP LG	ABC	EA		*	*	*		*		
PA-OZ-Z	5340-533-3511	EAB700-4	81996 CLAMP,LOOP-CRES,ANNEALED,.... W/TEFLON CUSHION,1/4 IN. LOOP ID,0.375 IN.W,0.032 IN.THK,0.204 IN.HOLE DIA	ABC	EA		*	*	*		*		
PA-FZ-Z	5340-533-3512	EAB700-5	81996 CLAMP,LOOP-CRES,ANNEALED,.... W/TEFLON CUSHION,0.313 IN. LOOP ID,0.375 IN.W,0.032 IN.THK,0.204 IN.HOLE DIA	ABC	EA		*	*	*		*		
PA-FZ-Z	5340-533-3611	EAB700-13	81996 CLAMP,LOOP-CRES,ANNEALED,.... W/TEFLON CUSHION,13/16 IN. LOOP ID,1/2 IN.W,0.032 IN. THK,0.204 IN.HOLE DIA	ABC	EA		*	*	*		*		
C PA-FZ-Z	5340-533-3642	EAB700-15	81996 CLAMP,LOOP-CRES,ANNEALED,.... W/TEFLON CUSHION,15/16 IN. LOOP ID,1/2 IN.W,0.032 IN. THK,0.204 IN.HOLE DIA	ABC	EA		*	*	*		*		
PA-OZ-Z	5340-533-3654	EAB700-17	81996 CLAMP,LOOP-CRES,ANNEALED,.... W/TEFLON CUSHION,1.063 IN. LOOP ID,1/2 IN.W,0.032 IN. THK,0.204 IN.HOLE DIA	ABC	EA		*	*	*		*		
C PA-FZ-Z	5365-541-9565	NAS43HT4-192	80205 SPACER,SEEVE-STEEL ALLOY,.... CADMIUM PLATED,0.256 IN.ID, 0.385 IN.OD,3 IN.LG	ABC	EA		*	*	*		*		
PA-FZ-Z	5340-548-7123	EAB700-18	81996 CLAMP,LOOP-CRES,ANNEALED.....	ABC	EA		*	*	*		*		

(1) SMR CODE	(2) FEDERAL STOCK NUMBER	(3) DESCRIPTION REFERENCE NUMBER & MFR CODE		USABLE ON CODE CH-47	(4) UNIT OF MEAS	(5) QTY INC IN UNIT	(6) 30-DAY DS/GS MAINT ALW (a) 1-20	(b) 21-50	(c) 51-100	(7) 1-YR ALWPER 100 EQUIP CNTGCY	(8) DEPOT MAINT ALWPER 100 EQUIP	(9) ILLUSTRATION (a) FIG NO	(b) ITEM NO
		FUNCTIONAL GROUP - 60 BULK MATERIALS										BULK	
			CONTINUED W/TEFLON CUSHION,1-1/8 IN. LOOP ID,1/2 IN.W,0.032 IN. THK,0.204 IN.HOLE DIA										
PA-OZ-Z	5340-548-7340	EAB700-28	81996 CLAMP,LOOP-CRES,ANNEALED,.... W/TEFLON CUSHION,1-750 IN. LOOP ID,1/2 IN.W,0.032 IN. THK,0.204 IN.HOLE DIA	ABC	EA		*	*	*		*		
PA-OZ-Z	5340-548-7707	EAB700-25	81996 CLAMP,LOOP-CRES,ANNEALED,.... W/TEFLON CUSHION,1-9/16 IN. LOOP ID,1/2 IN.W,0.032 IN. THK,0.204 IN.HOLE DIA	ABC	EA		*	*	*		*		
PA-OZ-Z	5340-548-7812	EAB700-20	81996 CLAMP,LOOP-CRES,ANNEALED,.... W/TEFLON CUSHION,1-1/4 IN. LOOP ID,1/2 IN.W,0.032 IN. THK,0.204 IN.HOLE DIA	ABC	EA		*	*	*		*		
PA-FZ-Z	5340-550-5036	MS20001P5-7200	96906 HINGE,BUTT-ALUMINUM ALLOY,... ANODIZED,W/CRES PIN,1-3/4 IN.W,72 IN.LG,0.056 IN.THK	ABC	EA		*	*	*		*		
PA-FZ-Z	5340-558-3003	MS20001PH8-7200	96906 HINGE,BUTT-ALUMINUM..... ALLOY,ANODIZED,1.167 IN.W, 72 IN.LG,0.076 IN.THK	ABC	EA		*	*	*		*		
PA-OZ-Z	5340-573-0780	AN253-2-3600	88044 PIN,HINGE-STEEL,0.089 IN..... DIA,36 IN.LG COMP	ABC	EA		*	*	*		*		
PA-DZ-Z	5340-573-5800	325092-3	03104 PLUG,PROTECTIVE,DUST AND..... MOISTURE SEAL-PLASTIC, 0.031 IN.DIA,0.625 IN.LG	ABC	EA						*		
PA-OZ-Z	5340-574-6018	NAS559-3	80205 LOCK,ROD END-STEEL,KEY TYPE,. 0.087 IN.W,0.518 IN.LG. 0.162 IN.H,0.047 IN.HOLE DIA	ABC	EA		*	*	*		*		
PA-OZ-Z	5340-576-2345	AN490HT6P	88044 ROD END,EXTERNALLY-STEEL,.... 1/4 IN.-28 NF,1-3/4 IN.LG, FOR 3/8 IN.OD TUBE	ABC	EA		*	*	*		*		
PB-FZ-Z	5365-580-1612	NAS42DD5-32	80205 SPACER,SLEEVE-ALUMINUM ALLOY, ANODIZED,0.160 IN.ID, 0.322 IN.OD,1/2 IN.LG	ABC	EA		*	*	*		*		
XB-OZ-Z		NAS42DD4-10A	80205 SPACER,SLEEVE-ALUMINUM ALLOY, 0.127 IN.ID,0.260 IN.OD, 5/32 IN.LG	ABC	EA								
PA-OZ-Z	5365-580-5790	NAS43DD4-12	80205 SPACER,SLEEVE-ALUMINUM ALLOY, ANODIZED,0.256 IN.ID, 0.385 IN.OD,3/16 IN.LG	ABC	EA		*	*	*		*		
C PA-FZ-Z	5340-582-3721	MS20001PH5-7200	96906 HINGE,BUTT-ALUMINUM..... ALLOY,ANODIZED,0.975 IN.W, 72 IN.LG,0.056 IN.THK COMP	ABC	EA		*	*	*		*		
PA-OZ-Z	5365-585-3624	NAS43DD3-112	80205 SPACER,SLEEVE-ALUMINUM ALLOY, 0.194 IN.ID,0.322 IN. OD,1-3/4 IN.LG	ABC	EA		*	*	*		*		
PA-FZ-Z	5365-594-6056	NAS43DD4-6	80205 SPACER,SLEEVE-ALUMINUM ALLOY,	ABC	EA		*	*	*		*		

(1) SMR CODE	(2) FEDERAL STOCK NUMBER	(3) DESCRIPTION REFERENCE NUMBER & MFR CODE		USABLE ON CODE	(4) UNIT OF MEAS	(5) QTY INC IN UNIT	(6) 30-DAY DS GS MAINT ALW (a) 1-20	(b) 21-50	(c) 51-100	(7) 1 YR ALWPER 1) EQUIP 2) NTOC	(8) DEPOT MAINT ALWPER 1) EQUIP	(9) ILLUSTRATION (a) FIG NO	(b) ITEM NO
		FUNCTIONAL GROUP - 60	BULK MATERIALS	CH-47									
			CONTINUED									BULK	
XB-OZ-R		88-5272PT2	49956 SPRING,HELICAL,COMPRESSION... STEEL,CADMIUM PLATED,6 COILS,0.032 IN.DIA WIRE, SQUARED & GROUND ENDS,0.499 IN.ID,9/16 IN.OD, 1-5/8 IN.LG	ABC	EA								
PA-FZ-Z	5340-598-4176	MS21919F20	96906 CLAMP,LOOP-STEEL,CARBON,..... W/SYNTHETIC RUBBER FUEL RESISTANT CUSHION,1-1/4 IN. LOOP ID,1/2 IN.W,0.032 IN. THK,0.204 IN.HOLE DIA,FOR 1-1/4 IN.OD TUBE	ABC	EA		*	*	*		*		
PA-DZ-Z	5340-605-5416	CD4	95760 CAP,PROTECTIVE,DUST AND..... MOISTURE SEAL-PLASTIC, RIBBED,7/16 IN.-20 NF,1/2 IN.DIA	ABC	EA						*		
PA-FZ-Z	5340-619-0695	MS20001PH6-7200	96906 LEAF,BUTT HINGE-ALUMINUM..... ALLOY,ANODIZED,1.102 IN.W, 72 IN.LG,0.056 IN.THK	ABC	EA		*	*	*		*		
PA-FZ-Z	5365-632-1254	NAS43DD4-192	80205 SPACER,SLEEVE-ALUMINUM ALLOY, ANODIZED,0.256 IN.ID,0.385 IN.OD,3 IN.LG	ABC	EA		*	*	*		*		
PA-OZ-Z	5365-633-5557	NAS43DD3-4	80205 SPACER,SLEEVE-ALUMINUM..... ALLOY,0.194 IN.ID,0.322 IN.OD,1/16 IN.LG	ABC	EA		*	*	*		*		
PA-OZ-Z	5365-633-5562	NAS43DD3-7	80205 SPACER,SLEEVE-ALUMINUM ALLOY, 0.194 IN.ID,0.322 IN.OD, 7/64 IN.LG	ABC	EA		*	*	*		*		
PA-OZ-Z	5340-664-8118	MS20001P6-7200	96906 HINGE,BUTT-ALUMINUM ALLOY,... ANODIZED,W/CRES PIN,2 IN.W, 72 IN.LG,0.056 IN.THK	ABC	EA		*	*	*		*		
PA-OZ-Z	5340-664-8138	MS20001P12-7200	96906 HINGE,BUTT-ALUMINUM ALLOY,... ANODIZED,W/CRES PIN,3.375 IN.W,72 IN.LG,0.115 IN.THK	ABC	EA		*	*	*		*		
PA-FZ-Z	5340-664-8141	MS20001P4-7200	96906 HINGE,BUTT-ALUMINUM ALLOY,... ANODIZED,W/CRES PIN,1-1/2 IN.W,72 IN.LG,0.056 IN.THK COMP	ABC	EA		*	*	*		*		
PA-FZ-Z	5340-664-8153	MS21919DG28	96906 CLAMP,LOOP-ALUMINUM ALLOY,... W/SYNTHETIC RUBBER CUSHION, 1.750 IN.LOOP ID,1/2 IN.W, 0.063 IN.THK,0.204 IN.HOLE DIA,FOR 1-3/4 IN.OD TUBE	ABC	EA		*	*	*		*		
PA-FZ-Z	5340-664-8163	MS21919WDG11	96906 CLAMP,LOOP-ALUMINUM ALLOY,... W/SYNTHETIC RUBBER WEDGE TYPE CUSHION,0.688 IN.LOOP ID,1/2 IN.W,0.050 IN.THK,	ABC	EA		*	*	*		*		

(1) SMR CODE	(2) FEDERAL STOCK NUMBER	(3) DESCRIPTION — REFERENCE NUMBER & MFR CODE		USABLE ON CODE	(4) UNIT OF MEAS	(5) QTY INC IN UNIT	(6) 30-DAY DS/GS MAINT ALW (a) 1-20	(b) 21-50	(c) 51-100	(7) 1YR ALWPER 100 EQUIP CNTGCY	(8) DEPOT MAINT ALWPER 100 EQUIP	(9) ILLUSTRATION (a) FIG NO	(b) ITEM NO
		FUNCTIONAL GROUP - 60 BULK MATERIALS		CH-47								BULK	
			CONTINUED 0.204 IN.HOLE DIA,FOR 11/16 IN.OD TUBE										
PA-FZ-Z	5340-664-8177	MS21919WDG23	96906 CLAMP,LOOP-ALUMINUM ALLOY,... W/ SYNTHETIC RUBBER WEDGE TYPE CUSHION,1-7/16 IN.LOOP ID,1/2 IN.W,0.040 IN.THK, 0.204 IN.HOLE DIA,FOR 1-7/16 IN.OD TUBE	ABC	EA		*	*	*		*		
PB-OZ-Z	5340-664-9056	MS21919WG6	96906 CLAMP,LOOP-STEEL,SYNTHETIC... RUBBER CUSHION,3/8 IN.ID, 3/8 IN.W,0.032 IN.THK, 0.204 IN.HOLE DIA	ABC	EA		*	*	*		*		
PA-OZ-Z	5340-671-9450	P102F10-0	82831 SPACER,SLEEVE.....	ABC	EA		*	*	*		*		
PA-OZ-Z	5340-673-6164	BACR10V3	81205 RETAINER,NUT AND BOLT.....	ABC	EA		*	*	*		*		
PA-OZ-Z	5365-684-2271	NAS42DD4-13	80205 SPACER,SLEEVE-ALUMINUM ALLOY, ANODIZED,0.127 IN.ID,0.260 IN.OD,13/64 IN.LG	ABC	EA		*	*	*		*		
PA-FZ-Z	5340-664-0399	SS51045	61864 BUTTON,PLUG.....	ABC	EA		*	*	*		*		
R PA-OZ-Z	5340-702-4855	MS179856811	96906 PIN,QUICK RELEASE.....	ABC	EA		*	*	*		*		
PA-FZ-Z	5365-711-8294	NAS43HT10-18	80205 SPACER,SLEEVE-STEEL,0.627 IN. ID,0.765 IN.OD,0.281 IN.LG	ABC	EA		*	*	*		*		
XB-OZ-Z		NAS43HT5-42	80205 SPACER,SLEEVE-STEEL ALLOY,... CADMIUM PLATED,0.320 IN.ID, 0.448 IN.OD,21/32 IN.LG	ABC	EA								
PA-FZ-Z	5325-716-3561	P102C10-0	82831 FASTENER,SPACER.....	ABC	EA		*	*	*		*		
R PA-OZ-Z	5365-720-2894	NAS43DD5-64	80205 SPACER,SLEEVE-ALUMINUM ALLOY, 0.320 IN.ID,0.448 IN.OD,1 IN.LG	ABC	EA		*	*	*		*		
PA-DZ-Z	5340-726-3009	NAS815-10A	80205 PLUG,PROTECTIVE DUST AND..... MOISTURE SEAL-VIRGIN POLYETHYLENE,7/8 IN.-14 NF, FOR 5/8 IN.TUBE	ABC	EA						*		
PA-FZ-Z	5340-726-9323	MS21919DG24	96906 CLAMP,LOOP-ALUMINUM ALLOY,... W/SYNTHETIC RUBBER CUSHION, 1-1/2 IN.LOOP ID,1/2 IN.W, 0.063 IN.THK,0.204 IN.HOLE DIA,FOR 1-1/2 IN.OD TUBE	ABC	EA		*	*	*		*		
PA-DZ-Z	5340-727-1095	NAS816-75	80205 CAP-PLUG,PROTECTIVE,DUST AND. MOISTURE SEAL-VIRGIN POLYETHYLENE,0.808 IN.ID OPEN END,0.755 IN.DIA CLOSED END	ABC	EA						*		
PA-OZ-Z	5340-727-1891	NAS43DD3-128	80205 SPACER,SLEEVE-ALUMINUM..... ALLOY,0.194 IN.ID,0.322 IN. OD,2 IN.LG	ABC	EA		*	*	*		*		
PA-DZ-Z	5340-764-7093	NAS816-72	80205 CAP-PLUG,PROTECTIVE,DUST AND. MOISTURE SEAL-VIRGIN POLYETHYLENE,0.761 IN.ID OPEN END,0.725 IN.DIA	ABC	EA						*		

(1) SMR CODE	(2) FEDERAL STOCK NUMBER	(3) DESCRIPTION — REFERENCE NUMBER & MFR CODE			USABLE ON CODE	(4) UNIT OF MEAS	(5) QTY INC IN UNIT	(6) 30-DAY DS GS MAINT ALW (a) 1-20	(b) 21-50	(c) 51-100	(7) 1 YR ALWPER 100 EQUIP CNTGCY	(8) DEPOT MAINT ALWPER 100 EQUIP	(9) ILLUSTRATION (a) FIG NO	(b) ITEM NO
		FUNCTIONAL GROUP - 60	BULK MATERIALS		CH-47									
				CONTINUED										
				CLOSED END										
PA-DZ-Z	5340-764-7094	NAS816-48	80205	CAP-PLUG,PROTECTIVE,DUST AND. MOISTURE SEAL-VIRGIN POLYETHYLENE,0.493 IN.ID OPEN END,0.481 IN.DIA CLOSED END	ABC	EA						*	BULK	
XB-FZ-Z		BACN10DZ3-30	81205	SPACER,PLATE NUT.....	ABC	EA								
XB-FZ-Z		BAC10DZ3-20	81205	SPACER,PLATE NUT.....	ABC	EA								
PA-DZ-Z	5340-770-9180	NAS816-115	80205	CAP-PLUG,PROTECTIVE,DUST AND. MOISTURE SEAL-VIRGIN POLYETHYLENE,1.217 IN.ID OPEN END,1.150 IN.DIA CLOSED END	ABC	EA						*		
PB-DZ-Z	5340-775-1809	676-3-10FR	13908	STRAP ASSEMBLY.....	ABC	EA		*	*	*		*		
PA-FZ-Z	5340-776-8139	NAS1395C5	80205	INSERT,SCREW THREAD-CRES..... 5/16 IN.-24 NF INTERNAL, 1/2 IN.-13 NC EXTERNAL, MINOR,0.437 IN.LG	ABC	EA		*	*	*		*		
PA-DZ-Z	5340-781-8061	NAS815-5A	80205	PLUG,PROTECTIVE DUST AND..... MOISTURE SEAL-VIRGIN POLYETHYLENE,1/2 IN.-20 NF, FOR 5/16 IN.TUBE	ABC	EA		*	*	*		*		
PB-FZ-Z	5340-783-9752	P102F31-0	82831	PLUG,FASTENER FLARE LOCK.....	ABC	EA		*	*	*		*		
PA-FZ-Z	5340-801-4629	NAS43DD3-88	80205	SPACER,SLEEVE-ALUMINUM ALLOY, ANODIZED,0.194 IN.ID,0.322 IN.OD,1-3/8 IN.LG	ABC	EA		*	*	*		*		
PA-DZ-Z	5340-801-4631	NAS42DD4-8A	80205	SPACER,SLEEVE-ALUMINUM ALLOY, 0.127 IN.ID,0.260 IN.OD,1/8 IN.LG	ABC	EA		*	*	*		*		
PA-DZ-Z	5340-802-3999	NAS43DD3-68	80205	SPACER,SLEEVE-ALUMINUM ALLOY, 0.194 IN.ID,0.322 IN.OD, 1-1/16 IN.LG	ABC	EA		*	*	*		*		
PA-FZ-Z	5340-807-1070	MS20001PH9-7200	96906	LEAF,BUTT HINGE-ALUMINUM..... ALLOY,ANODIZED,1.352 IN. W,72 IN.LG,0.056 IN.THK COMP	ABC	EA		*	*	*		*		
PA-DZ-Z	5340-808-4042	4028-9	72285	CLIP,SPRING TENSION.....	ABC	EA		*	*	*		*		
PA-FZ-Z	5340-809-1087	MS20001PH10-7200	96906	LEAF,BUTT HINGE-ALUMINUM..... ALLOY,ANODIZED,1.477 IN.W, 72 IN.LG,0.056 IN.THK	ABC	EA		*	*	*		*		
PA-DZ-Z	5340-810-6617	NAS43DD3-3	80205	SPACER,SLEEVE-ALUMINUM ALLOY, 0.194 IN.ID,0.322 IN.OD, 3/64 IN.LG	ABC	EA		*	*	*		*		
XB-HZ-Z		KR7A15	99057	RING,LOCK,KEYED.....	ABC	EA								
PA-FZ-Z	5340-813-8062	NAS814-12	80205	CAP-PLUG,PROTECTIVE-VIRGIN... POLYETHYLENE,1-1/16 IN.-12N,FOR 3/4 IN.OD TUBE	ABC	EA		*	*	*		*		
N PB-FZ-Z	5340-814-1712		80205	PIN,QUICK RELEASE-STEEL..... HEAD,BODY & PULL RING,	ABC	EA		*	*	*		*		

(1) SMR CODE	(2) FEDERAL STOCK NUMBER	(3) DESCRIPTION REFERENCE NUMBER & MFR CODE		USABLE ON CODE CH-47	(4) UNIT OF MEAS	(5) QTY INC IN UNIT	(6) 30-DAY DS/GS MAINT ALW (a) 1-20	(b) 21-50	(c) 51-100	(7) 1-YR ALWPER 100 EQUIP CNTGCY	(8) DEPOT MAINT ALWPER 100 EQUIP	(9) ILLUSTRATION (a) FIG NO	(b) ITEM NO
		FUNCTIONAL GROUP - 60	BULK MATERIALS									BULK	
			CONTINUED										
			W/PUSH BUTTON RELEASE MECHANISM,1/4 IN.SHANK DIA										
PA-DZ-Z	5340-815-0890	NAS816-158	80205 CAP-PLUG,PROTECTIVE,DUST AND. MOISTURE SEAL-VIRGIN POLYETHYLENE,1.649 IN.ID OPEN END,1.580 IN.DIA CLOSED END	ABC	EA						*		
PA-DZ-Z	5340-817-0912	NAS818-4	80205 PLUG,PROTECTIVE,DUST AND..... MOISTURE SEAL-ALUMINUM ALLOY,7/16 IN.-20 NF,FOR 1/4 IN.OD TUBE	ABC	EA		*	*	*		*		
PA-FZ-Z	5340-817-2398	NAS818-8	80205 PLUG,PROTECTIVE-ALUMINUM..... ALLOY,3/4 IN.-16 NF,FOR 1/2 IN.OD TUBE	ABC	EA		*	*	*		*		
PA-FZ-Z	5340-817-8688	MS20253-2-7100	96906 ROD,STRAIGHT,HEADLESS-CRES... PASSIVATED FINISH,0.089 IN. DIA,71 IN.LG COMP	ABC	EA		*	*	*		*		
PA-HZ-Z	5340-819-7874	093002	92555 PLUG WITH PIN.....	ABC	EA		*	*	*		*		
PA-OZ-Z	5340-820-0637	MS20257HC4-7200	96906 LEAF,BUTT HINGE-COMP.....	ABC	EA						*		
PA-DZ-Z	5340-821-5866	NAS816-62	80205 CAP-PLUG,PROTECTIVE,DUST AND. MOISTURE SEAL-VIRGIN POLYETHYLENE,0.662 IN.ID OPEN END,0.628 IN.DIA CLOSED END	ABC	EA								
XB-FZ-Z		NAS43DD4-108	80205 SPACER,SLEEVE-ALUMINUM ALLOY, ANODIZED,0.256 IN.ID,0.385 IN.OD,1-11/16 IN.LG	ABC	EA								
PA-OZ-Z	5340-826-5693	NAS816-91	80205 CAP-PLUG,PROTECTIVE,DUST AND. MOISTURE SEAL-VIRGIN POLYETHYLENE,0.960 IN.ID OPEN END,0.915 IN.DIA CLOSED END	ABC	EA		*	*	*		*		
PA-FZ-Z	5340-829-8003	CL100-3-60	99862 CABLE ASSEMBLY.....	ABC	EA		*	*	*		*		
PA-DZ-Z	5340-833-7039	NAS815-12A	80205 PLUG,PROTECTIVE,DUST AND..... MOISTURE SEAL-VIRGIN POLYETHYLENE,1-1/16 IN.-12 N,FOR 3/4 IN.TUBE	ABC	EA						*		
PA-FZ-Z	5340-834-8427	NAS1395-4L	80205 INSERT,SCREW THREAD-STEEL,... SELF-LOCKING INSERT,NO.4-40 NC,INTERNAL,NO.12-24 NC	ABC	EA		*	*	*		*		
PA-FZ-Z	5340-835-1783	604D3-50FT53NF	82831 FASTENER,SELFLOCK.....	ABC	EA		*	*	*		*		
PA-DZ-Z	5340-837-6558	MS9102-40	96906 BRACKET,ANGLE-CRES,90 DEG.... ANGLE,0.750 IN.LG 1ST LEG, 1.312 IN.LG 2ND LEG,0.068 IN.THK,2 DRILLED HOLES,FOR NO.10,1/4 IN.BOLT	ABC	EA						*		
PA-FZ-Z	5340-838-2787	MS20257HP4-7200	96906 LEAF,BUTT HINGE-ALUMINUM..... ALLOY,ANODIZED,3/4 IN.W,72 IN.LG,0.040 IN.THK COMP	ABC	EA		*	*	*		*		
R PA-OZ-Z	5365-838-4891	NAS42DD4-6A	80205 SPACER,SLEEVE-ALUMINUM ALLOY,	ABC	EA		*	*	*		*		

(1) SMR CODE	(2) FEDERAL STOCK NUMBER	(3) DESCRIPTION — REFERENCE NUMBER & MFR CODE		USABLE ON CODE	(4) UNIT OF MEAS	(5) QTY INC IN UNIT	(6) 30-DAY DS GS MAINT ALW (a) 1-20	(b) 21-50	(c) 51-	(7)	(8) DEPOT MAINT	(9) ILLUSTRATION FIG NO	ITEM NO
		FUNCTIONAL GROUP - 60	BULK MATERIALS	CH-47									
			CONTINUED										
			0.127 IN.ID,0.260 IN.OD, 3/32 IN.LG										BULK
PA-OZ-Z	5365-841-9948	NAS43DD4-12A	80205 SPACER,SLEEVE-ALUMINUM ALLOY, 0.256 IN.ID,0.385 IN.OD, 3/16 IN.LG	ABC	EA		*	*	*		*		
PB-FZ-Z	5365-849-4695	BACS40SD16-38	81205 SHIM,LAMINATED.....	ABC	EA		*	*	*		*		
PA-OZ-Z	5340-849-6375	NAS816-65	80205 CAP-PLUG,PROTECTIVE,DUST AND MOISTURE SEAL-VIRGIN POLYETHYLENE,0.687 IN.ID OPEN END,0.658 IN.DIA CLOSED END	ABC	EA						*		
XB-FZ-R		L258-1-7											
PA-FZ-Z	5340-859-5337	P106F1032-04	99057 INSERT,RING LOCKED.....	ABC	EA								
PA-FZ-Z	5340-871-4234	707R	82831 FASTENER,PLUG.....	ABC	EA		*	*	*		*		
PA-OZ-Z	5340-881-0020	MS27975-1	71286 FASTENER,RECEPTACLE.....	ABC	EA		*	*	*		*		
			96906 CLEVIS,ROD END-STEEL,0.250... IN.HOLES DIA,1/4 IN.-28 NF,0.875 IN.LG	ABC	EA		*	*	*		*		
PA-FZ-Z	5365-882-0320	BACS40SD10-104	81205 SHIM.....	ABC	EA		*	*	*		*		
PA-FZ-Z	5360-883-2863	MS24585C55	96906 SPRING,HELICAL,COMPRESSION... CRES,0.136 IN.ID,0.180 IN. OD,0.750 IN.LG	ABC	EA		*	*	*		*		
PA-FZ-Z	5340-894-0668	406001											
PA-FZ-Z	5340-898-9637	VS20101-2-4	92555 SHIELD,EXPANSION.....	ABC	EA		*	*	*		*		
PA-FZ-Z	5340-898-9643	VS20101-1-4	77272 LEAF,BUTT HINGE-COMP.....	ABC	EA		*	*	*		*		
PA-FZ-Z	5340-902-4178	MS20253P3-1800	77272 LEAF,BUTT HINGE-COMP.....	ABC	EA		*	*	*		*		
			96906 ROD,STRAIGHT HEADLESS-CRES,.. 0.117 IN.DIA,18 IN.LG	ABC	EA		*	*	*		*		
PA-OZ-Z	5340-904-6630	NAS811-12A	80205 CAP,PROTECTIVE,DUST AND..... MOISTURE SEAL-VIRGIN POLYETHYLENE,FOR 3/4 IN.OD TUBE COMP	ABC	EA		*	*	*		*		
PA-OZ-Z	5340-904-6631	NAS811-16A	80205 CAP,PROTECTIVE,DUST AND..... MOISTURE SEAL-VIRGIN POLYETHYLENE,FOR 1 IN.TUBE COMP	ABC	EA		*	*	*		*		
PA-OZ-Z	5340-904-6632	NAS811-20A	80205 CAP,PROTECTIVE,DUST AND..... MOISTURE SEAL-VIRGIN POLYETHYLENE,FOR 1-1/4 IN. OD TUBE COMP	ABC	EA		*	*	*		*		
PA-OZ-Z	5340-904-6633	NAS811-4A	80205 CAP,PROTECTIVE,DUST AND..... MOISTURE SEAL-VIRGIN POLYETHYLENE,FOR 1/4 IN.OD TUBE COMP	ABC	EA		*	*	*		*		
PA-OZ-Z	5340-904-6634	NAS811-6A	80205 CAP,PROTECTIVE,DUST AND..... MOISTURE SEAL-VIRGIN POLYETHYLENE,FOR 3/8 IN. TUBE COMP	ABC	EA		*	*	*		*		
PA-OZ-Z	5340-904-6635	NAS811-8A	80205 CAP,PROTECTIVE,DUST AND..... MOISTURE SEAL-VIRGIN POLYETHYLENE,FOR 1/2 IN.	ABC	EA		*	*	*		*		

(1) SMR CODE	(2) FEDERAL STOCK NUMBER	(3) DESCRIPTION REFERENCE NUMBER & MFR CODE		USABLE ON CODE CH-47	(4) UNIT OF MEAS	(5) QTY INC IN UNIT	(6) 30-DAY DS GS MAINT ALW (a) 1-20	(b) 21-50	(c) 51-100	(7) 1-YR ALWPER 100 EQUIP CNTGCY	(8) DEPOT MAINT ALWPER 100 EQUIP	(9) ILLUSTRATION (a) FIG NO	(b) ITEM NO
		FUNCTIONAL GROUP - 60 BULK MATERIALS										BULK	
				CONTINUED									
				TUBE COMP									
PA-FZ-Z	5340-914-0521	NAS815-4A	80205	PLUG,PROTECTIVE,DUST AND..... MOISTURE SEAL-VIRGIN POLYETHYLENE,7/16 IN.-20 NF,FOR 1/4 IN.TUBE COMP	ABC	EA	*	*	*		*		
PA-OZ-Z	5340-914-0522	NAS815-16A	80205	PLUG,PROTECTIVE,DUST &..... MOISTURE SEAL-VIRGIN POLYETHYLENE,1-5/16 IN.-12N FOR 1 IN.TUBE COMP	ABC	EA	*	*	*		*		
PA-FZ-Z	5340-914-5745	MS20253P3-7200	96906	ROD,STRAIGHT,HEADLESS-CRES... CADMIUM PLATED,0.117 IN. DIA,72 IN.LG COMP	ABC	EA	*	*	*		*		
PA-DZ-Z	5340-914-5748	NAS816-145	80205	CAP-PLUG,PROTECTIVE,DUST AND. MOISTURE SEAL-VIRGIN POLYETHYLENE,1.528 IN.ID OPEN END,1.452 IN.DIA CLOSED END	ABC	EA					*		
PA-DZ-Z	5340-916-2439	NAS816-98	80205	CAP-PLUG,PROTECTIVE,DUST..... AND MOISTURE SEAL-VIRGIN POLYETHYLENE,1.040 IN.ID OPEN END,0.984 IN.DIA CLOSED END	ABC	EA					*		
PA-DZ-Z	5340-928-9022	921070	62983	PLUG,PROTECTIVE,DUST AND..... MOISTURE SEAL-PLASTIC, FRICTION TYPE,TWO 3/8 IN. DIA HOLES EQUALLY SPACED ON A 4.875 IN.DIA BOLT CIRCLE,FOR 4-5/16 ID OPENING	ABC	EA					*		
PB-FZ-Z	5365-936-4585	BACS40R7B26	81205	SHIM.....	ABC	EA	*	*	*		*		
PA-FZ-Z	5340-947-9891	MS20001PX12-7200	96906	LEAF,BUTT HINGE-ALUMINUM..... ALLOY,ANODIZED,1.860 IN.W, 72 IN.LG,0.115 IN.THK COMP	ABC	EA	*	*	*		*		
PB-FZ-Z	5340-948-9834	NAS1395-3L	80205	INSERT,SCREW THREAD-STEEL,... SELF-LOCKING,NO.10-32 NF, INTERNAL,3/8 IN.-16 NC	ABC	EA	*	*	*		*		
PA-FZ-Z	5340-949-8274	MS20001PH4-7200	96906	LEAF,BUTT HINGE-ALUMINUM..... ALLOY,ANODIZED,0.850 IN.W, 72 IN.LG,0.056 IN.THK COMP	ABC	EA	*	*	*		*		
PA-FZ-Z	5340-952-7481	VS20106-1	77272	LEAF,BUTT HINGE-ALUMINUM..... ALLOY,TRANSVERSELY TO HINGE PIN,0.495 IN.LG,72 IN. PARALLEL TO HINGE PIN COMP	ABC	EA	*	*	*		*		
XB-OZ-Z		NAS42DD4-39A	80205	SPACER,SLEEVE-ALUMINUM ALLOY, 0.127 IN.ID,0.260 IN.OD, 39/64 IN.LG	ABC	EA							
PA-FZ-Z	5340-952-7499	MS20001PY12-7200	96906	LEAF,BUTT HINGE-ALUMINUM.....	ABC	EA	*	*	*		*		

(1) SMR CODE	(2) FEDERAL STOCK NUMBER	(3) DESCRIPTION REFERENCE NUMBER & MFR CODE		USABLE ON CODE	(4) UNIT OF MEAS	(5) QTY INC IN UNIT	(6) 30-DAY DS GS MAINT ALW (a) 1-20	(b) 21-50	(c) 51-100	(7) 1-YR ALWPER	(8) DEPOT MAINT ALWPER	(9) ILLUSTRATION a. FIG NO	b. ITEM NO
		FUNCTIONAL GROUP - 60	BULK MATERIALS	CH-47									
			CONTINUED									BULK	
PA-FZ-Z	5340-952-7500	MS20001PX14-7200	96906 ALLOY,ANODIZED,1.860 IN.W, 72 IN.LG,0.115 IN.THK COMP LEAF,BUTT HINGE-ALUMINUM.....	ABC	EA		*	*	*		*		
PA-FZ-Z	5340-966-3785	NAS1395C4L	80205 ALLOY,ANODIZED,2.086 IN.W, 72 IN.LG,0.163 IN.THK COMP INSERT,SCREW THREAD-CRES,....	ABC	EA		*	*	*		*		
PB-FZ-Z	5340-970-4509	2391-8CNX1-000	91767 1/4 IN.-28 NF,SELF-LOCKING INSERT,0.37 IN.LG										
PA-FZ-Z	5340-973-6933	NAS1394C3	80205 INSERT.....	ABC	EA		*	*	*		*		
PA-FZ-Z	5340-984-5569	MS20001PY4-7200	96906 INSERT,SCREW THREAD-STEEL,... SELF-LOCKING,NO.10-32 NF, INTERNAL,5/16 IN.-18 NC LEAF,BUTT HINGE-ALUMINUM.....	ABC ABC	EA EA		* *	* *	* *		* *		
PA-FZ-Z	5340-988-6032	NAS815-6A	80205 ALLOY,ANODIZED,0.850 IN.W, 72 IN.LG,0.056 IN.THK PLUG,PROTECTIVE,DUST AND.....	ABC	EA		*	*	*		*		
PA-OZ-Z	5340-989-4575	EAB700D21	81996 MOISTURE SEAL-VIRGIN POLYETHYLENE,9/16 IN.-18 NF,FOR 3/8 IN.TUBE COMP CLAMP,LOOP-ALUMINUM ALLOY,... ANODIZED,W/TEFLON CUSHION, 1.313 IN.LOOP ID,1/2 IN.W, 0.063 IN.THK,0.204 IN. HOLE DIA	ABC	EA		*	*	*		*		
C PA-FZ-Z	5340-989-4577	EAB700D25	81996 CLAMP,LOOP-ALUMINUM ALLOY,... ANODIZED,W/TEFLON CUSHION, 1.563 IN.LOOP ID,1/2 IN.W, 0.063 IN.THK,0.204 IN.HOLE DIA	ABC	EA		*	*	*		*		
PA-FZ-Z	5340-989-4578	EAB700D26	81996 CLAMP,LOOP-ALUMINUM ALLOY,... 1.625 IN.LOOP ID	ABC	EA		*	*	*		*		
PA-OZ-Z	5360-989-7625	MS24585-492	96906 SPRING,HELICAL,COMPRESSION... STEEL,0.566 IN.ID,0.700 IN. OD,0.067 IN.THK,1.500 IN.LG	ABC	EA		*	*	*		*		
PA-OZ-Z	5360-989-7626	MS24585C419	96906 SPRING,HELICAL,COMPRESSION... CRES,0.424 IN.ID,0.550 IN. OD,0.063 IN.THK,1.120 IN.LG	ABC	EA		*	*	*		*		
PA-FZ-Z	5340-993-1472	EAB700D29	81996 CLAMP,LOOP-ALUMINUM ALLOY,... ANODIZED,W/TEFLON CUSHION, 1.813 IN.LOOP ID,1/2 IN.W, 0.063 IN.THK,0.204 IN. HOLE DIA	ABC	EA		*	*	*		*		
PA-FZ-Z	5340-993-1474	EAB700D30	81996 CLAMP,LOOP-ALUMINUM ALLOY,... ANODIZED,W/TEFLON CUSHION, 1.875 IN.LOOP ID,1/2 IN.W, 0.063 IN.THK,0.204 IN. HOLE DIA	ABC	EA		*	*	*		*		
PA-OZ-Z	5340-993-5474	EAB700D33	81996 CLAMP,LOOP-ALUMINUM ALLOY,... ANODIZED,W/TEFLON CUSHION,	ABC	EA		*	*	*		*		

(1) SMR CODE	(2) FEDERAL STOCK NUMBER	(3) DESCRIPTION REFERENCE NUMBER & MFR CODE		USABLE ON CODE CH-47	(4) UNIT OF MEAS	(5) QTY INC IN UNIT	(6) 30-DAY DS/GS MAINT ALW (a) 1-20	(b) 21-50	(c) 51-100	(7) 1-YR ALWPER 100 EQUIP CNTGCY	(8) DEPOT MAINT ALWPER 100 EQUIP	(9) ILLUSTRATION (a) FIG NO	(b) ITEM NO
		FUNCTIONAL GROUP - 60	BULK MATERIALS									BULK	
			CONTINUED										
			2.062 IN.LOOP ID,1/2 IN.W, 0.063 IN.THK,0.204 IN.HOLE DIA										
PA-OZ-Z	5340-993-6250	EAB700D35	81996 CLAMP,LOOP-ALUMINUM ALLOY,... ANODIZED,W/TEFLON CUSHION, 2.188 IN.LOOP ID,1/2 IN.W, 0.063 IN.THK,0.204 IN.HOLE DIA	ABC	EA		*	*	*		*		
PB-FZ-Z	5340-993-9524	MS17160-123	96906 CLIP,SPRING TENSION..... BERYLLIUM COPPER,SILVER PLATED,0.440 IN.W,0.750 IN. LG,1/2 IN.H,0.370 IN.ID, 2 MTG HOLES,0.103 IN.DIA	ABC	EA		*	*	*		*		
XB-FZ-Z		BACS40L16-52	81205 SHIM.....	ABC	EA								
PB-FZ-Z	5365-997-6328	BACS40L16-60	81205 SHIM-ALUMINUM ALLOY,1 IN..... W,3.750 IN.LG,0.125 IN. TO 0.131 IN.THK	ABC	EA		*	*	*		*		
PA-OZ-Z	5340-997-7046	NAS814-6	80205 CAP,PROTECTIVE,DUST AND..... MOISTURE SEAL-PLASTIC,9/16 IN.-18 NF,0.047 IN.LG, FOR 3/8 IN.TUBE COMP	ABC	EA		*	*	*		*		
PA-FZ-Z	5355-836-0920	S230-1	75376 KNOB.....	ABC	EA		*	*	*		*		
PA-OZ-Z	5360-073-1030	VS20302-2	77272 SPRING,HELICAL,TORSION-COMP..	ABC	EA		*	*	*		*		
PA-OZ-Z	5360-903-4626	MS24586C277	96906 SPRING,HELICAL,EXTENSION..... CRES,0.600 IN.ID,0.750 IN. OD,4-1/2 IN.LG	ABC	EA		*	*	*		*		
PA-FZ-Z	5365-142-7059	NAS42HT5-10	80205 SPACER,SLEEVE-STEEL,0.160.... IN.ID,0.322 IN.OD, 0.156 IN.LG	ABC	EA		*	*	*		*		
PA-FZ-Z	5365-282-5322	MS16633-12	96906 RING,RETAINING-STEEL,..... EXTERNAL,0.094 IN.ID,0.015 IN.THK	ABC	EA		*	*	*		*		
PA-FZ-Z	5365-282-7127	MS16624-19	96906 RING,RETAINING-BERYLLIUM..... COPPER,EXTERNAL,0.179 IN. ID,0.015 IN.THK	ABC	EA		*	*	*		*		
PA-FZ-Z	5365-287-0103	AN814-6	88044 PLUG,MACHINE THREAD-STEEL,... CADMIUM PLATED,W/THD RELIEF,HEX HEAD,9/16 IN.-18 NF,FOR 3/8 IN.OD TUBING	ABC	EA		*	*	*		*		
PA-FZ-Z	5365-293-9800	NAS43DD3-24	80205 SPACER,SLEEVE-ALUMINUM ALLOY, GR2024-T3,0.194 IN.ID,0.322 IN.OD,3/8 IN.LG COMP	ABC	EA		*	*	*		*		
PA-OZ-Z	5365-302-8098	NAS43DD1-16	80205 SPACER,SLEEVE-ALUMINUM ALLOY, ANODIZED,0.143 IN.ID,0.260 IN.OD,1/4 IN.LG	ABC	EA		*	*	*		*		
PA-OZ-Z	5365-302-8099	NAS43DD1-32	80205 SPACER,SLEEVE-ALUMINUM ALLOY, ANODIZED,0.143 IN.ID,0.260 IN.OD,1/2 IN.LG	ABC	EA		*	*	*		*		
PB-FZ-Z	5365-564-2369	KR7-1	99057 RING,RETAINER.....	ABC	EA		*	*	*		*		

(1) SMR CODE	(2) FEDERAL STOCK NUMBER	(3) DESCRIPTION REFERENCE NUMBER & MFR CODE		USABLE ON CODE	(4) UNIT OF MEAS	(5) QTY INC IN UNIT	(6) 30-DAY DS GS MAINT ALW (a) 1-20	(b) 21-50	(c) 51-100	(7) 1-YR ALWPER 100 EQUIP CNTGCY	(8) DEPOT MAINT ALWPER 100 EQUIP	ILLUSTRATION (a) FIG NO	(b) ITEM NO
		FUNCTIONAL GROUP - 60	BULK MATERIALS	CH-47									
PA-OZ-Z	5365-580-3641	NAS43HT4-8	80205 SPACER,SLEEVE-STEEL ALLOY,... CADMIUM PLATED,0.256 IN.ID, 0.385 IN.OD,1/8 IN.LG	ABC	EA		*	*	*		*	BULK	
PA-OZ-Z	5365-580-3647	NAS43HT3-24	80205 SPACER,SLEEVE-STEEL ALLOY,... CADMIUM PLATED,0.194 IN.ID, 0.322 IN.OD,3/8 IN.LG	ABC	EA		*	*	*		*		
PA-OZ-Z	5365-580-5317	NAS43DD0-8	80205 SPACER,SLEEVE-ALUMINUM ALLOY, 0.115 IN.ID,0.198 IN.OD,1/8 IN.LG	ABC	EA		*	*	*		*		
PA-OZ-Z	5365-585-1249	NAS43DD1-48	80205 SPACER,SLEEVE-ALUMINUM ALLOY, 0.143 IN.ID,0.260 IN.OD,3/4 IN.LG	ABC	EA		*	*	*		*		
PB-FZ-Z	5365-585-2542	AN814-3CL	88044 PLUG,MACHINE THREAD-CRES,3/8. IN.-24 NF,0.562 IN.LG	ABC	EA		*	*	*		*		
PA-FZ-Z	5365-594-6054	NAS43DD3-22	80205 SPACER,SLEEVE-ALUMINUM ALLOY, ANODIZED,0.256 IN.ID,0.385 IN.OD,3/32 IN.LG	ABC	EA		*	*	*		*		
PB-OZ-Z	5365-698-3418	NAS43HT3-16	80205 SPACER,SLEEVE-STEEL ALLOY,... 0.194 IN.ID,0.322 IN.OD,1/4 IN.LG	ABC	EA		*	*	*		*		
PA-OZ-Z	5365-709-1822	NAS43HT3-13	80205 SPACER,SLEEVE-STEEL,0.194 IN. ID,0.322 IN.OD,13/64 IN.LG	ABC	EA		*	*	*		*		
PA-OZ-Z	5365-720-8064	MS16624-1025	96906 RING,RETAINING-STEEL,..... EXTERNAL,0.225 IN.ID,0.025 IN.THK	ABC	EA		*	*	*		*		
PB-HZ-Z	5365-721-4828	MS16625-1102	96906 RING,RETAINING-STEEL,CARBON,. INTERNAL,1.106 IN.OD,0.042 IN.THK	ABC	EA		*	*	*		*		
PB-FZ-Z	5365-801-2500	MS16625-1112	96906 RING,RETAINING-STEEL,CARBON,. CADMIUM PLATED,INTERNAL, 1.217 IN.OD,0.050 IN.THK	ABC	EA		*	*	*		*		
PA-OZ-Z	5365-803-7312	MS16624-1035	96906 RING,RETAINING-STEEL,CARBON,. CADMIUM PLATED,EXTERNAL, 0.320 IN.ID,0.025 IN.THK	ABC	EA		*	*	*		*		
PA-FZ-Z	5365-803-7320	MS16624-1106	96906 RING,RETAINING-STEEL,CARBON,. CADMIUM PLATED,INTERNAL, 1.150 IN.OD,0.050 IN.THK	ABC	EA		*	*	*		*		
PB-FZ-Z	5365-804-2027	MS16624-1093	96906 RING,RETAINING-STEEL,CARBON,. CADMIUM PLATED,EXTERNAL, 0.867 IN.ID,0.042 IN.THK	ABC	EA		*	*	*		*		
PA-OZ-Z	5365-804-2786	MS16625-1125	96906 RING,RETAINING-STEEL,CARBON,. CADMIUM PLATED,INTERNAL, 1.351 IN.OD,0.050 IN.THK	ABC	EA		*	*	*		*		
PA-FZ-Z	5365-804-6860	MS16625-4100	96906 RING,RETAINING-CRES,1.081 IN. DIA,0.042 IN.THK	ABC	EA		*	*	*		*		
PA-OZ-Z	5365-807-5333	MS16625-4068	96906 RING,RETAINING-CRES,..... PASSIVATED FINISH,INTERNAL, 0.763 IN.OD,0.035 IN.THK	ABC	EA		*	*	*		*		
PA-OZ-Z	5365-828-8526	MS3420-6A	96906 BUSHING,CABLE ADAPTER-RUBBER, SYNTHETIC,0.312 IN.ID,0.427	ABC	EA		*	*	*		*		

	(1) SMR CODE	(2) FEDERAL STOCK NUMBER	(3) DESCRIPTION REFERENCE NUMBER & MFR CODE		USABLE ON CODE CH-47	(4) UNIT OF MEAS	(5) QTY INC IN UNIT	(6) 30-DAY DS/GS MAINT ALW (a) 1-20	(b) 21-50	(c) 51-100	(7) 1YR ALWPER 100 EQUIP CNTGCY	(8) DEPOT MAINT ALWPER 100 EQUIP	(9) ILLUSTRATION (a) FIG NO	(b) ITEM NO
		FUNCTIONAL GROUP - 60	BULK MATERIALS										BULK	
					CONTINUED									
					IN.OD,2 IN.LG									
	PA-FZ-Z	5365-871-4386	56220640010	89944	RING,RETAINING.....	ABC	EA	*	*	*		*		
	PA-FZ-Z	5365-878-4784	MS28774-142	96906	SPACER,NONMETALLIC..... TETRAFLUOROETHYLENE,2.383 IN.ID,2.557 IN.OD,0.045 IN. THK	ABC	EA	*	*	*		*		
	PB-FZ-Z	5530-129-7721		81348	PLYWOOD-FED NN-P-530 COMP....	ABC	SF	*	*	*		*		
	PA-FZ-Z	5680-763-0868		81349	CORE MATERIAL,CELLULAR,..... STRUCTURAL-ALUMINUM ALLOY CORE,EXPANDED TYPE,48 IN.W, 96 IN.LG,1.00 IN.THK,1/4 IN.CELL SIZE,MIL-C-7438, GRADE B	ABC	EA	*	*	*		*		
N	PA-FZ-Z	5680-763-0866		81349	CORE MATERIAL,CELLULAR..... STRUCTURAL-ALUMINUM ALLOY CORE,1/4 IN.CELL SIZE,0.920 IN.THK,48 IN.W,96 IN.LG, MIL-C-7438,GRADE B	ABC	EA	*	*	*		*		
N	PA-FZ-Z	5680-763-0867		81349	CORE MATERIAL,CELLULAR..... STRUCTURAL-ALUMINUM ALLOY, EXPANDED,0.250,DEPTH,0.750 IN.DENSITY RATING,3.4 LBS PER CUBIC FT,FED QQ-A-250/2 GRADE A	ABC	EA	*	*	*		*		
N	PA-FZ-Z	5680-763-0869		81349	CORE,MATERIAL,CELLULAR..... STRUCTURAL-ALUMINUM ALLOY CURE,1-4 IN.CELL SIZE,4.3 LB PER CU FT,0.540 IN.THK, 48 IN.W,96 IN.LG,MIL-C-7438	ABC	EA	*	*	*		*		
	PA-FZ-Z	5680-926-4635		81348	CORE MATERIAL,CELLULAR..... ALLOY,W/O FACES,48 IN.W, 0.405 IN.THK,96 IN.LG, FED QQ-A-250/2	ABC	FT	*	*	*		*		
	PA-FZ-Z	5680-926-4636		81349	CORE MATERIAL,CELLULAR,..... STRUCTURAL-ALUMINUM ALLOY, 48 IN.W,96 IN.LG,0.590 IN. THK,1/4 IN.CELL SIZE, MIL-C-7438	ABC	FT	*	*	*		*		
	PA-FZ-Z	5680-926-4637		81349	CORE MATERIAL,CELLULAR,..... STRUCTURAL-ALUMINUM ALLOY, 48 IN.W,96 IN.LG.1-1/2 IN. THK,3/8 IN.CELL SIZE, MIL-C-7438	ABC	EA	*	*	*		*		
	PA-FZ-Z	5680-926-4638		81349	CORE MATERIAL,CELLULAR,..... STRUCTURAL-ALUMINUM ALLOY, 48 IN.W,96 IN.LG,1.000 IN. THK,1/4 IN.CELL SIZE, MIL-C-7438	ABC	FT	*	*	*		*		
	PA-FZ-Z	5680-926-4639		81349	CORE MATERIAL,CELLULAR,.....	ABC	FT	*	*	*		*		

(1) SMR CODE	(2) FEDERAL STOCK NUMBER	(3) DESCRIPTION REFERENCE NUMBER & MFR CODE		USABLE ON CODE	(4) UNIT OF MEAS	(5) QTY INC IN UNIT	(6) 30-DAY DS/GS MAINT ALW: (a) 1-20	(b) 21-50	(c) 51-100	(7) 1 YR ALWPER 100 EQUIP CNTGCY	(8) DEPOT MAINT ALWPER 100 EQUIP	(9) ILLUSTRATION (a) FIG NO	(b) ITEM NO
		FUNCTIONAL GROUP - 60	BULK MATERIALS	CH-47									
			CONTINUED STRUCTURAL-ALUMINUM ALLOY, 48 IN.W,96 IN.LG,0.255 IN. THK,3/8 IN.CELL SIZE, MIL-C-7438									BULK	
PA-FZ-Z	5680-926-4640	81349	CORE MATERIAL,CELLULAR,..... STRUCTURAL-ALUMINUM ALLOY, 48 IN.W,96 IN.LG,1-222 IN. THK,1/4 IN.CELL SIZE, MIL-C-7438	ABC	FT		*	*	*		*		
PA-FZ-Z	5680-926-4641	81349	CORE MATERIAL,CELLULAR,..... STRUCTURAL-ALUMINUM ALLOY, 48 IN.W,96 IN.LG,0.968 IN. THK.1/4 IN.CELL SIZE, MIL-C-7438	ABC	FT		*	*	*		*		
PA-FZ-Z	5680-926-4643	81349	CORE MATERIAL,CELLULAR,..... STRUCTURAL-ALUMINUM ALLOY, 48 IN.W,96 IN.LG.0.590 IN. THK,1/4 IN.CELL SIZE, MIL-C-7438	ABC	EA		*	*	*		*		
PA-FZ-Z	5680-926-4644	81349	CORE MATERIAL,CELLULAR,..... STRUCTURAL-ALUMINUM ALLOY CORE,W/O FACES,48 IN.W,96 IN.LG,1.00 IN.THK,1/4 IN. CELL SIZE,2.3 LB PER CUBIC FT MAX DENSITY,MIL-C-7438	ABC	EA		*	*	*		*		
PA-FZ-Z	5680-926-4645	81349	CORE MATERIAL,CELLULAR..... STRUCTURAL-ALUMINUM ALLOY CORE,W/O FACES,48 IN.W,96 IN.LG,1.000 IN.THK,1/4 IN. CELL SIZE,3.4 LB PER CUBIC FT MAX DENSITY,MIL-C-7438	ABC	EA		*	*	*		*		
PA-FZ-Z	5680-926-4647	81349	CORE MATERIAL,CELLULAR,..... STRUCTURAL-ALUMINUM ALLOY CORE,48 IN.W,96 IN.LG,1.222 IN.THK,1/8 IN.CELL SIZE, MIL-C-7438	ABC	EA		*	*	*		*		
PB-FZ-Z	5680-926-4649	81349	CORE MATERIAL,CELLULAR,..... STRUCTURAL-ALUMINUM ALLOY CORE,W/O FACES,5/16 IN.CELL SIZE,12 IN.W,12 IN.LG,0.375 IN.THK,MIL-C-7438	ABC	EA		*	*	*		*		
PA-HZ-Z	5905-104-8336	RCR20G104JS	81349 RESISTOR,FIXED,COMPOSITION...	ABC	EA		*	*	*		*		
PA-HZ-Z	5905-106-1247	RCR32G221JS	81349 RESISTOR,FIXED,COMPOSITION...	ABC	EA		*	*	*		*		
PA-FZ-Z	5905-114-5398	RCR20G225JS	81349 RESISTOR,FIXED,COMPOSITION...	ABC	EA		*	*	*		*		
PA-FZ-Z	5905-116-8560	RCR20G204JS	81349 RESISTOR,FIXED,COMPOSITION...	ABC	EA		*	*	*		*		
PA-FZ-Z	5905-141-0595	RCR20C472JS	81349 RESISTOR,FIXED,COMPOSITION...	ABC	EA		*	*	*		*		
PB-FZ-Z	5905-177-7357	RCR32G116JS	81349 RESISTOR,FIXED,COMPOSITION...	ABC	EA		*	*	*		*		
PA-FZ-Z	5905-195-6752		81349 RESISTOR,FIXED,COMPOSITION... MILR11ARC42GF392K	ABC	EA		*	*	*		*		
PA-FZ-Z	5905-247-7587	RCR32G1215R	81349 RESISTOR,FIXED,COMPOSITION...	ABC	EA		*	*	*		*		

	(1) SMR CODE	(2) FEDERAL STOCK NUMBER	(3) DESCRIPTION REFERENCE NUMBER & MFR CODE			USABLE ON CODE CH-47	(4) UNIT OF MEAS	(5) QTY INC IN UNIT	(6) 30-DAY DS/GS MAINT ALW (a) 1-20	(b) 21-50	(c) 51-100	(7) 1-YR ALWPER 100 EQUIP. CNTGCY	(8) DEPOT MAINT ALWPER 100 EQUIP	(9) ILLUSTRATION (a) FIG NO	(b) ITEM NO
			FUNCTIONAL GROUP - 60	BULK MATERIALS											
	PA-FZ-Z	5905-253-1231	RC42GF391J	81349	RESISTOR,FIXED,COMPOSITION... 390 OHMS TOTAL RESISTANCE,2 W POWER DISSIPATION,RATED AT 70 DEG C AMBIENT TEMP, INSULATED,2 WIRE TYPE LEAD TERMINALS,0.318 IN.OD,0.688 IN.LG,MIL-R-11A	ABC	EA		*	*	*		*	BULK	
	PA-FZ-Z	5905-279-2596		81349	RESISTOR,FIXED,COMPOSITION... 120 OHMS TOTAL RESISTANCE,2 W/POWER DISSIPATION,RATED AT 70 DEG C AMBIENT TEMP TERMINAL,0.318 IN.OD,0.688 IN.LG,MIL-R-11/7	ABC	EA		*	*	*		*		
C	PA-HZ-Z	5905-369-6916	RCR32G122JS	81349	RESISTOR,FIXED,COMPOSITION... RPLS-- 5905-136-8434	ABC	EA		*	*	*		*		
C	PA-FZ-Z	5905-494-4622	RCR32G182JS	81349	RESISTOR,FIXED,COMPOSITION...	ABC	EA		*	*	*		*		
	PA-FZ-Z	5925-549-3905	06761-1-5	82647	CIRCUIT BREAKER.....	ABC	EA		*	*	*		*		
	PB-FZ-Z	5925-682-4015	MS25244-20	96906	CIRCUIT BREAKER-1.094 IN.... LG,3/4 IN.W,2.542 IN.THK,20 AMP,2 SCREW TYPE TERMINALS	ABC	EA		*	*	*		*		
	PB-FZ-Z	5930-070-8091	MS24658-33E	96906	SWITCH,TOGGLE.....	ABC	EA		*	*	*		*		
	PB-FZ-Z	5930-503-3848	MS25028-1	96906	SWITCH,TOGGLE.....	ABC	EA		*	*	*		*		
	PA-OZ-Z	5930-615-7882	MS35059-27	96906	SWITCH,TOGGLE-6 TERMINALS,6.. SCREWS,6 WASHERS,TWO POLES, 1.025 IN.W,1.346 IN.LG,1 MTG HOLE,CIRCUIT WITH TOGGLE LEVER IN UP POSITION NOM ON,CENTER POSITION OFF, DOWN POSITION NOM ON	ABC	EA		*	*	*		*		
	PA-FZ-Z	5930-660-3946	MS24525-24	96906	SWITCH,TOGGLE-4 POLE ST,BAT.. TYPE ACTUATOR,1.340 IN.W, 1.660 IN.LG,1.370 IN.H,8 SCREW TYPE TERMINALS, BUSHING MTD,0.432 IN.DIA	ABC	EA		*	*	*		*		
	PA-OZ-Z	5930-683-5977	MS24420-1	96906	SWITCH,SENSITIVE.....	ABC	EA		*	*	*		*		
N	PA-OZ-Z	5930-847-2599	MS24660-23D	96906	SWITCH,TOGGLE-4 POLE DT,..... 1.660 IN.LG,1.340 IN.W, 1.370 IN.H,ACTUATOR,LEVER TYPE,12 SCREW TYPE TERMINALS,BUSHING MTD,0.469 IN.DIA	ABC	EA		*	*	*		*		
	PA-OZ-Z	5930-937-4178	CVA1224M	12427	SWITCH,INTERPHONE.....	ABC	EA		*	*	*		*		
	PA-FZ-Z	5935-013-9496	KS89-36	91836	CONNECTOR,ELECTRICAL.....	ABC	EA		*	*	*		*		
	PA-OZ-Z	5935-021-9405	MS3121F22-21P	96906	CONNECTOR,PLUG,ELECTRICAL.... CORROSION RESISTANT,1.375 IN.OD,1-5/16 IN.-18 NEF ACCESSORY THD,INSERT ARRANGEMENT-21,PIN INSERT, 1.578 IN.W,1.578 IN.H,2.824	ABC	EA		*	*	*		*		

(1) SMR CODE	(2) FEDERAL STOCK NUMBER	(3) DESCRIPTION REFERENCE NUMBER & MFR CODE			USABLE ON CODE	(4) UNIT OF MEAS	(5) QTY INC IN UNIT	(6) 30-DAY DS/GS MAINT ALW. (a) 1-20	(b) 21-50	(c) 51-100	(7) 1-YR ALWPER 10% EQUIP CNTGCY	(8) DEPOT MAINT ALWPER 100 EQUIP	(9) ILLUSTRATION (a) FIG NO	(b) ITEM NO
		FUNCTIONAL GROUP - 60	BULK MATERIALS		CH-47									
				CONTINUED									BULK	
				IN.LG,W/RESILIENT BUSHING,2 SCREWS,NO.8-32 NC,2 LOCKWASHERS COMP										
PA-FZ-Z	5935-027-0242	PT06CE18-11S	77820	CONNECTOR,PLUG,ELECTRICAL....	ABC	EA		*	*	*		*		
PA-FZ-Z	5935-051-2589	M39012-15-0002	81349	CONNECTOR,PLUG,ELECTRICAL....	ABC	EA		*	*	*		*		
PA-FZ-Z	5935-051-5071	PT00CE24-61P	77820	CONNECTOR,RECEPTACLE.....	ABC	EA		*	*	*		*		
PB-HZ-Z	5935-052-2970	MS3116P20-41PW	96906	CONNECTOR,PLUG,ELECTRICAL.... CORROSION RESISTANT,1.260 IN.COUPLING ID,1-3/16 IN.-18 NEF ACCESSORY THD, POTTING FORM,INSERT ARRANGEMENT-41,PIN INSERT	ABC	EA		*	*	*		*		
PA-FZ-Z	5935-052-6853	MS3100R10SL4P	96906	CONNECTOR,RECEPTACLE,..... ELECTRICAL-WALL MTG TYPE, ENVIRONMENT RESISTANT,5/8 IN.-24 NEF,INSERT ARRANGEMENT-4,PIN INSERT	ABC	EA		*	*	*		*		
PA-FZ-Z	5935-060-2440	PT06CE12-3S	77820	CONNECTOR,ELECTRICAL.....	ABC	EA		*	*	*		*		
PA-FZ-Z	5935-061-7747	DPE60-33S	71468	CONNECTOR,RECEPTACLE.....	ABC	EA		*	*	*		*		
PA-FZ-Z	5935-067-3363	PT06CE20-39S	77820	CONNECTOR,PLUG,ELECTRICAL....	ABC	EA		*	*	*		*		
PA-FZ-Z	5935-068-1903	PT06CE20-41SSR	77820	CONNECTOR,PLUG,ELECTRICAL....	ABC	EA		*	*	*		*		
PA-FZ-Z	5935-068-1940	PT06CE8-4SW	77820	CONNECTOR,PLUG,ELECTRICAL....	ABC	EA		*	*	*		*		
PA-FZ-Z	5935-068-1941	PT06CE8-3S	77820	CONNECTOR,PLUG,ELECTRICAL....	ABC	EA		*	*	*		*		
PA-FZ-Z	5935-068-1954	PT06CE8-2S	77820	CONNECTOR,PLUG,ELECTRICAL....	ABC	EA		*	*	*		*		
PA-FZ-Z	5935-068-2228	PT00CE18-32S	77820	CONNECTOR,RECEPTACLE.....	ABC	EA		*	*	*		*		
PA-FZ-Z	5935-068-2586	PT00CE22-21S	77820	CONNECTOR,RECEPTACLE.....	ABC	EA		*	*	*		*		
PA-FZ-Z	5935-068-3315	PT00CE20-16P	77820	CONNECTOR,RECEPTACLE.....	ABC	EA		*	*	*		*		
PA-FZ-Z	5935-069-0907	PT06CE12-8S	77820	CONNECTOR,PLUG,ELECTRICAL....	ABC	EA		*	*	*		*		
PA-FZ-Z	5935-069-0914	PT06CE22-21S	77820	CONNECTOR,PLUG,ELECTRICAL....	ABC	EA		*	*	*		*		
PA-FZ-Z	5935-069-3010	PT06P8-4PSR	77820	CONNECTOR,PLUG,ELECTRICAL....	ABC	EA		*	*	*		*		
PA-FZ-Z	5935-069-4272	PT00CE20-41S	77820	CONNECTOR,RECEPTACLE.....	ABC	EA		*	*	*		*		
PA-FZ-Z	5935-074-8729	MS3116P10-6S	96906	CONNECTOR,PLUG,ELECTRICAL....	ABC	EA		*	*	*		*		
PA-FZ-Z	5935-080-4192	MRA34S-JTC6H	81312	CONNECTOR,PLUG,ELECTRICAL....	ABC	EA		*	*	*		*		
PA-FZ-Z	5935-080-8327	PT06CE20-41S	77820	CONNECTOR,PLUG,ELECTRICAL....	ABC	EA		*	*	*		*		
PA-FZ-Z	5935-080-9072	PT00CE22-55S	77820	CONNECTOR,RECEPTACLE.....	ABC	EA		*	*	*		*		
PA-FZ-Z	5935-081-0896	PT06CE22-55P	77820	CONNECTOR,PLUG,ELECTRICAL....	ABC	EA		*	*	*		*		
PA-FZ-Z	5935-087-1809	PT00CE20-41P	77280	CONNECTOR,PLUG,ELECTRICAL....	ABC	EA		*	*	*		*		
PB-FZ-Z	5935-088-3985	MS3116P18-11S	96906	CONNECTOR,PLUG,ELECTRICAL.... ENVIRONMENT RESISTANT,1.136 IN.COUPLING ID,1-1/16 IN.-18 NEF ACCESSORY THD, POTTING FORM,INSERT ARRANGEMENT-11,SOCKET INSERT	ABC	EA		*	*	*		*		
PA-FZ-Z	5935-089-2097	MS3116F10-6S	96906	CONNECTOR,PLUG,ELECTRICAL.... CORROSION RESISTANT,0.602 IN.COUPLING ID,9/16 IN.-24 NEF ACCESSORY THD,W/CABLE CLAMP & BUSHING,INSERT	ABC	EA		*	*	*		*		

(1) SMR CODE	(2) FEDERAL STOCK NUMBER	(3) DESCRIPTION — REFERENCE NUMBER & MFR CODE		USABLE ON CODE CH-47	(4) UNIT OF MEAS	(5) QTY INC IN UNIT	(6) 30-DAY DS/GS MAINT ALW (a) 1-20	(b) 21-50	(c) 51-100	(7) 1-YR ALWPER 100 EQUIP CNTGCY	(8) DEPOT MAINT ALWPER 100 EQUIP	(9) ILLUSTRATION (a) FIG NO	(b) ITEM NO
		FUNCTIONAL GROUP - 60 BULK MATERIALS											
			CONTINUED									BULK	
			ARRANGEMENT-6,SOCKET INSERT										
PA-FZ-Z	5935-089-4487	MS3106R10SL4S	96906	CONNECTOR,PLUG,ELECTRICAL.... ENVIRONMENT RESISTANT, 5/8 IN.-24 THD,INSERT ARRANGEMENT-4,SOCKET INSERT COMP	ABC	EA		*	*	*		*		
PB-DZ-Z	5935-105-5491	MS3121F18-11P	96906	CONNECTOR,PLUG,ELECTRICAL.... ENVIRONMENT RESISTANT, NO.6-32 NC,INSERT ARRANGEMENT-11,PIN INSERT COMP	ABC	EA						*		
PA-FZ-Z	5935-110-0748	KS89-12	91836	CONNECTOR,ELECTRICAL.....	ABC	EA		*	*	*		*		
PA-FZ-Z	5935-134-5693	PT08CE14-18S	77820	CONNECTOR,RECEPTACLE.....	ABC	EA		*	*	*		*		
C PB-FZ-Z	5935-137-4671	MS25043-16D	96906	COVER,ELECTRICAL CONNECTOR...	ABC	EA		*	*	*		*		
PA-FZ-Z	5935-189-6844	10300078	18876	CONNECTOR,RECEPTACLE.....	ABC	EA		*	*	*		*		
PB-HZ-Z	5935-201-8072	AN3115-1	88044	CONNECTOR,PLUG,ELECTRICAL.... 13/16 IN.W,1-7/16 IN.LG,3/8 IN.THK,2 CONTACTS, NONLOCKING TYPE	ABC	EA		*	*	*		*		
XB-HZ-Z		MS3116P16-8SW	96906	CONNECTOR,PLUG,ELECTRICAL.... CORROSION RESISTANT,1.010 IN.COUPLING ID,15/16 IN.-20 NEF ACCESSORY THD,POTTING FORM,INSERT ARRANGEMENT-8, SOCKET INSERT	ABC	EA								
PB-HZ-Z	5935-225-8217	MS3116P16-26SY	96906	CONNECTOR,PLUG,ELECTRICAL.... CORROSION RESISTANT,1.010 IN.COUPLING ID,15/16 IN.-20 NEF ACCESSORY THD,POTTING FORM,INSERT ARRANGEMENT-26, SOCKET INSERT	ABC	EA		*	*	*		*		
PB-HZ-Z	5935-225-8219	MS3116P16-26SZ	96906	CONNECTOR,PLUG,ELECTRICAL.... CORROSION RESISTANT,1.010 IN.COUPLING ID,15/16 IN.-20 NEF ACCESSORY THD,POTTING FORM,INSERT ARRANGEMENT-26, SOCKET INSERT	ABC	EA		*	*	*		*		
PA-FZ-Z	5935-225-8629	PT00CE12-10S	77820	CONNECTOR,RECEPTACLE.....	ABC	EA		*	*	*		*		
PA-FZ-Z	5935-225-8649	PT06CE16-26S	77820	CONNECTOR,PLUG,ELECTRICAL....	ABC	EA		*	*	*		*		
PA-FZ-Z	5935-225-8650	PT06CE10-6S	77820	CONNECTOR,PLUG,ELECTRICAL....	ABC	EA		*	*	*		*		
PB-FZ-Z	5935-225-8683	MS3116P8-4SW	96906	CONNECTOR,PLUG,ELECTRICAL.... CORROSION RESISTANT,0.481 IN.COUPLING ID,7/16 IN.-28 NEF ACCESSORY THD,POTTING FORM,INSERT ARRANGEMENT-4, SOCKET INSERT	ABC	EA		*	*	*		*		
PA-FZ-Z	5935-226-1741	KS89-17	91836	ADAPTER,CONNECTOR.....	ABC	EA		*	*	*		*		
PB-DZ-Z	5935-258-4838	MS3101A28-21P	96906	CONNECTOR,PLUG,ELECTRIC.....	ABC	EA						*		

(1) SMR CODE	(2) FEDERAL STOCK NUMBER	(3) DESCRIPTION REFERENCE NUMBER & MFR CODE		USABLE ON CODE	(4) UNIT OF MEAS	(5) QTY INC IN UNIT	(6) 30-DAY DS GS MAINT ALW (a) 1-20	(b) 21-50	(c) 51-100	(7) 1 YR ALWPER 100 EQUIP CNTGCY	(8) DEPOT MAINT ALWPER 100 EQUIP	(9) ILLUSTRATION (a) FIG NO	(b) ITEM NO
		FUNCTIONAL GROUP - 60 BULK MATERIALS		CH-47									
			CONTINUED ENVIRONMENT RESISTANT, 1-3/4 IN.-18 THD INSERT ARRANGEMENT-21,PIN INSERT COMP									BULK	
	PA-FZ-Z	5935-259-7410	MS3108B10SL3S	96906	CONNECTOR,PLUG,ELECTRICAL.... ENVIRONMENT RESISTANT, 5/8 IN.-24 NEF,INSERT ARRANGEMENT-3,SOCKET INSERT	ABC	EA		*	*	*		*		
R	PB-FZ-Z	5999-267-9389	MS3193-12A	96906	CONTACT,ELECTRICAL-COPPER.... ALLOY,CRIMP SOCKET, REMOVABLE,NO.12 CONTACT SIZE	ABC	EA		*	*	*		*		
C	PA-FZ-Z	5935-280-2195	MS3057-6A	96906	CLAMP,CABLE TO CONNECTOR..... ENVIRONMENT RESISTANT,3/4 IN.-20 NEF,INSERT ARRANGEMENT-14,SOCKET INSERT	ABC	EA		*	*	*		*		
	PA-FZ-Z	5935-280-2206	9177178	18876	SHIELD,ELECTRICAL..... CONNECTOR-METALLIC MATERIAL,CORROSION RESISTANT,RECTANGULAR SHAPE,7/16 IN.W,1-5116 IN. LG,1-19/32 IN.H,SCREW MTD, TWO NO.4-40 NC,TAPPED MTG HOLES,FOR GENERAL PURPOSE USE	ABC	EA		*	*	*		*		
	PB-FZ-Z	5935-280-2353	MS3057-16A	96906	ADAPTER,CABLE TO CONNECTOR... ALUMINUM ALLOY,0.938 IN.ID, 1-7/16 IN.-18 NEF, 1-1/32 IN.LG COMP	ABC	EA		*	*	*		*		
	PB-FZ-Z	5935-296-8004	AN3116-2	88044	CONNECTOR,PLUG,ELECTRICAL.... CORROSION RESISTANT,INSERT ARRANGEMENT-1,FOR GENERAL PURPOSE USE	ABC	EA		*	*	*		*		
N	PA-FZ-Z	5935-490-0124	PT00CE8-4P	77820	CONNECTOR,RECEPTACLE.....	ABC	EA		*	*	*		*		
N	PA-FZ-Z	5935-490-0125	PT01CE8-4PSR	77820	CONNECTOR,PLUG,ELECTRICAL....	ABC	EA		*	*	*		*		
N	PA-FZ-Z	5935-490-0126	PT06CE8-2SW	77820	CONNECTOR,PLUG,ELECTRICAL....	ABC	EA		*	*	*		*		
	PA-FZ-Z	5935-502-0002	20746	71468	SHIELD,ELECTRICAL.....	ABC	EA		*	*	*		*		
C	PA-FZ-Z	5935-557-1770	MS25183A12-5S	96906	CONNECTOR,PLUG,ELECTRICAL....	ABC	EA		*	*	*		*		
	PA-FZ-Z	5935-557-1863	MS25183A10SL3S	96906	CONNECTOR,PLUG,ELECTRICAL.... ENVIRONMENT RESISTANT, 5/8 IN.-24 NEF,INSERT ARRANGEMENT-3,SOCKET	ABC	EA		*	*	*		*		
	PA-FZ-Z	5935-557-1973	MS25183A10SL4S	96906	CONNECTOR,PLUG,ELECTRICAL.... 5/8 IN.-24 NEF,INSERT ARRANGEMENT-4,SOCKET INSERT,W/GROUNDING SCREW	ABC	EA		*	*	*		*		
	PA-FZ-Z	5935-578-3565	DPD45-33SIL	71468	CONNECTOR,RECEPTACLE.....	ABC	EA		*	*	*		*		

(1) SMR CODE	(2) FEDERAL STOCK NUMBER	(3) DESCRIPTION REFERENCE NUMBER & MFR CODE			USABLE ON CODE CH-47	(4) UNIT OF MEAS	(5) QTY INC IN UNIT	(6) 30-DAY DS/GS MAINT ALW (a) 1-20	(b) 21-50	(c) 51-100	(7) 1-YR ALWPER 100 EQUIP CNTGCY	(8) DEPOT MAINT ALWPER 100 EQUIP	(9) ILLUSTRATION (a) FIG NO	(b) ITEM NO
		FUNCTIONAL GROUP - 60	BULK MATERIALS											
PA-OZ-Z	5935-588-4042	225-0017-000	71468	PLUG,SEALING COMP.....	ABC	EA		*	*	*		*	BULK	
PA-FZ-Z	5935-646-6521	DPA24C2-33S	71468	CONNECTOR,RECEPTACLE.....	ABC	EA		*	*	*		*		
PA-FZ-Z	5935-660-4296	UG563BU	80056	CONNECTOR,PLUG,ELECTRICAL....	ABC	EA		*	*	*		*		
PA-FZ-Z	5935-660-5198	MRA34PJ6	81312	CONNECTOR,PLUG,ELECTRICAL....	ABC	EA		*	*	*		*		
PB-FZ-Z	5935-682-0536	MS3106R28-21S	96906	CONNECTOR,PLUG,ELECTRICAL.... ENVIRONMENT RESISTANT, INSERT ARRANGEMENT-21, SOCKET INSERT COMP	ABC	EA		*	*	*		*		
N PA-FZ-Z	5935-682-7782	PT06CE8-4S	77820	CONNECTOR,PLUG,ELECTRICAL....	ABC	EA		*	*	*		*		
XB-FZ-Z		DC37PC26	71468	CONNECTOR,RECEPTACLE,..... ELECTRICAL	ABC	EA								
PB-FZ-Z	5935-687-1135	MS3100R10SL3S	96906	CONNECTOR,RECEPTACLE,..... ELECTRICAL-WALL MTG TYPE, ENVIRONMENT RESISTANT,5/8 IN.-24 NEF,INSERT ARRANGEMENT-3,SOCKET INSERT	ABC	EA		*	*	*		*		
PA-FZ-Z	5935-716-6578	DC20963	71468	SHIELD,ELECTRICAL.....	ABC	EA		*	*	*		*		
PB-FZ-Z	5935-721-0488	MS3106R14S6S	96906	CONNECTOR,PLUG,ELECTRICAL.... ENVIRONMENT RESISTANT,7/8 IN.-20 NF,INSERT ARRANGEMENT-6,SOCKET INSERT COMP	ABC	EA		*	*	*		*		
PB-FZ-Z	5935-721-0491	MS3106R18-1S	96906	CONNECTOR,PLUG,ELECTRICAL.... ENVIRONMENT RESISTANT, 1-1/8 IN.-18 NEF,INSERT ARRANGEMENT-1,SOCKET INSERT	ABC	EA		*	*	*		*		
PB-FZ-Z	5935-721-0917	MS25042-12C	96906	COVER,ELECTRICAL CONNECTOR... 3/4 IN.-20 THD,0.812 IN. DIA,0.156 IN.OD,5.000 IN.LG	ABC	EA		*	*	*		*		
PB-FZ-Z	5935-721-1081	MS3106R14S6P	96906	CONNECTOR,PLUG,ELECTRICAL.... ENVIRONMENT RESISTANT,7/8 IN.-20 NEF,INSERT ARRANGEMENT-6,PIN INSERT	ABC	EA		*	*	*		*		
PA-FZ-Z	5935-725-1345	MS3102R12S3S	96906	CONNECTOR,RECEPTACLE,..... ELECTRICAL-ENVIRONMENT RESISTANT,3/4 IN.-20 NEF, INSERT ARRANGEMENT-3, SOCKET INSERT	ABC	EA		*	*	*		*		
PA-FZ-Z	5935-725-4153	MS3106R18-11S	96906	CONNECTOR,PLUG,ELECTRICAL.... ENVIRONMENT RESISTANT, 1-1/8 IN.-18 NEF,INSERT ARRANGEMENT-11,SOCKET INSERT	ABC	EA		*	*	*		*		
PA-FZ-Z	5935-725-4591	MS3106R18-9P	96906	CONNECTOR,PLUG,ELECTRICAL.... ENVIRONMENT RESISTANT,1-1/8 IN.-18 NEF,INSERT ARRANGEMENT-9,PIN INSERT	ABC	EA		*	*	*		*		
PB-FZ-Z	5935-725-4638	MS3106R12S3S	96906	CONNECTOR,PLUG,ELECTRICAL.... ENVIRONMENT RESISTANT,3/4 IN.-20 NEF,INSERT	ABC	EA		*	*	*		*		

(1) SMR CODE	(2) FEDERAL STOCK NUMBER	(3) DESCRIPTION REFERENCE NUMBER & MFR CODE		USABLE ON CODE	(4) UNIT OF MEAS	(5) QTY INC IN UNIT	(6) 30-DAY DS/GS MAINT ALW (a) 1-20	(b) 21-50	(c) 51-100	(7) 1 YR ALWPER 100 EQUIP CNTGCY	(8) DEPOT MAINT ALWPER 100 EQUIP	(9) ILLUSTRATION (a) FIG NO	(b) ITEM NO
		FUNCTIONAL GROUP - 60 BULK MATERIALS		CH-47									
			CONTINUED ARRANGEMENT-3,SOCKET INSERT COMP									BULK	
C PB-HZ-Z	5935-725-8233	MS3106R20-29S	96906 CONNECTOR,PLUG,ELECTRICAL.... ENVIRONMENT RESISTANT, 1-1/4 IN.-18 NF,INSERT ARRANGEMENT-29,SOCKET INSERT	ABC	EA		*	*	*		*		
PB-HZ-Z	5935-725-9269	MS3106R32-7P	96906 CONNECTOR,PLUG,ELECTRICAL.... ENVIRONMENT RESISTANT, 2 IN.-18 THD,INSERT ARRANGEMENT-7,PIN INSERT	ABC	EA		*	*	*		*		
PA-FZ-Z	5935-726-7101	MS3124E14-19S	96906 CONNECTOR,RECEPTACLE,..... ELECTRICAL-CORROSION RESISTANT,1 IN.-20 NEF, INSERT ARRANGEMENT-19, SOCKET INSERT	ABC	EA		*	*	*		*		
PB-HZ-Z	5935-727-1970	MS3106R20-4S	96906 CONNECTOR,PLUG,ELECTRICAL.... ENVIRONMENT RESISTANT,1-1/4 IN.-18 NF,INSERT ARRANGEMENT-4,SOCKET INSERT	ABC	EA		*	*	*		*		
PA-FZ-Z	5935-728-7825	MS3120E22-55P	96906 CONNECTOR,RECEPTACLE..... ELECTRICAL-WALL MTG TYPE, CORROSION RESISTANT,1.375 IN.OD,1-5/16 IN.-18 NEF ACCESSORY THD,INSERT ARRANGEMENT-55,PIN INSERT	ABC	EA		*	*	*		*		
PA-FZ-Z	5935-738-6379	PT06CE20-39PW	77820 CONNECTOR,PLUG,ELECTRICAL....	ABC	EA		*	*	*		*		
PB-HZ-Z	5935-752-2793	MS3106R28-12P	96906 CONNECTOR,PLUG,ELECTRICAL.... ENVIRONMENT RESISTANT, 1-3/4 IN.-18 NEF,INSERT ARRANGEMENT-12,PIN INSERT	ABC	EA		*	*	*		*		
PB-PZ-Z	5935-754-8711	MS3108R10SL3S	96906 CONNECTOR,PLUG,ELECTRICAL.... ENVIRONMENT RESISTANT,5/8 IN.-24 NF,INSERT ARRANGEMENT-3,SOCKET INSERT COMP	ABC	EA		*	*	*		*		
PA-FZ-Z	5935-755-2894	MS3100R20-29P	96906 CONNECTOR,RECEPTACLE,..... ELECTRICAL-WALL MTG TYPE, ENVIRONMENT RESISTANT,1-1/4 IN.-18 NEF,INSERT ARRANGEMENT-29,PIN INSERT COMP	ABC	EA		*	*	*		*		
PA-FZ-Z	5935-762-2415	MS3120E20-41S	96906 CONNECTOR RECEPTACLE,..... ELECTRICAL-WALL MTG TYPE, CORROSION RESISTANT,1-1/4 IN.OD,1-3/16 IN.-18 NEF ACCESSORY THD,INSERT ARRANGEMENT-41,SOCKET INSERT	ABC	EA		*	*	*		*		
PB-DZ-Z	5935-765-5976	MS3126F22-21S	96906 CONNECTOR,PLUG,ELECTRICAL....	ABC	EA						*		

(1) SMR CODE	(2) FEDERAL STOCK NUMBER	(3) DESCRIPTION REFERENCE NUMBER & MFR CODE		USABLE ON CODE	(4) UNIT OF MEAS	(5) QTY INC IN UNIT	(6) 30-DAY DS/GS MAINT ALW (a) 1-20	(b) 21-50	(c) 51-100	(7) 1-YR ALWPER 100 EQUIP CNTGCY	(8) DEPOT MAINT ALWPER 100 EQUIP	(9) ILLUSTRATION (a) FIG NO	(b) ITEM NO
		FUNCTIONAL GROUP - 60 BULK MATERIALS		CH-47									
												BULK	
					CONTINUED								
					CORROSION RESISTANT,1.385 IN.COUPLING ID,1-5/16 IN.-18 NEF ACCESSORY THD, INSERT ARRANGEMENT-21, SOCKET INSERT,W/RESILIENT BUSHING,2 SCREWS NO.8-32 NC,2 LOCKWASHERS COMP								
PB-DZ-Z	5935-765-6056	MS3126F18-11S	96906	CONNECTOR,PLUG,ELECTRICAL....	ABC	EA					*		
				CORROSION RESISTANT,1.136 IN.COUPLING ID,1-1/16 IN.-18 NEF ACCESSORY THD INSERT ARRANGEMENT-11, SOCKET INSERT,W/RESILIENT BUSHING,2 SCREWS,NO.8-32 NC,2 LOCKWASHERS COMP								
XB-FZ-Z		PT06CE20-39PY	77820	CONNECTOR,PLUG,ELECTRICAL....	ABC	EA							
PA-FZ-Z	5935-775-3009	327635	00779	ADAPTER,WIRE.....	ABC	EA		*	*	*	*		
PA-FZ-Z	5935-777-6871	MS3120E18-11P	96906	CONNECTOR,RECEPTACLE,.....	ABC	EA		*	*	*	*		
				ELECTRICAL-WALL MTG TYPE, CORROSION RESISTANT,1.125 IN.OD,1-1/16 IN.-18 NEF ACCESSORY THD,INSERT ARRANGEMENT-11,PIN INSERT								
N PA-DZ-Z	5935-780-3064	PT00CE16-26P	77820	CONNECTOR,RECEPTACLE.....	ABC	EA		*	*	*	*		
PA-FZ-Z	5935-781-1183	PT06CE24-61PW	77820	CONNECTOR,PLUG,ELECTRICAL....	ABC	EA		*	*	*	*		
PA-FZ-Z	5935-783-5382	PT06CE8-45SR	77820	CONNECTOR,PLUG,ELECTRICAL....	ABC	EA		*	*	*	*		
XB-FZ-Z		PT06CE20-39PZ	77820	CONNECTOR,PLUG,ELECTRICAL....	ABC	EA							
PA-FZ-Z	5935-791-0640	DPD2-156-34PFA95	71468	CONNECTOR,RECEPTACLE.....	ABC	EA		*	*	*	*		
PA-FZ-Z	5935-800-9858	MS3106R16S1SC	96906	CONNECTOR,PLUG,ELECTRICAL....	ABC	EA		*	*	*	*		
				ENVIRONMENT RESISTANT, 1 IN.-20 NEF,INSERT ARRANGEMENT-1,SOCKET INSERT COMP									
PB-FZ-Z	5935-801-5096	MS3116P22-55S	96906	CONNECTOR,PLUG,ELECTRICAL....	ABC	EA		*	*	*	*		
				1.656 IN.DIA,1.609 IN.LG, 55 CONTACTS,1.49 IN.DIA CABLE ACCOMMODATION									
PB-HZ-Z	5935-805-4119	MS3116P18-32S	96906	CONNECTOR,PLUG,ELECTRICAL....	ABC	EA		*	*	*	*		
				CORROSION RESISTANT,1.136 IN.COUPLING ID,1-1/16 IN.-18 NEF ACCESSORY THD, POTTING FORM,INSERT ARRANGEMENT-32,SOCKET INSERT									
PB-FZ-Z	5935-805-4120	MS3116P16-26S	96906	CONNECTOR,PLUG,ELECTRICAL....	ABC	EA		*	*	*	*		
				CORROSION RESISTANT,1.010 IN.COUPLING ID,15/16 IN.-20 NEF ACCESSORY THD,POTTING FORM,INSERT ARRANGEMENT-26,									

(1) SMR CODE	(2) FEDERAL STOCK NUMBER	(3) DESCRIPTION REFERENCE NUMBER & MFR CODE		USABLE ON CODE	(4) UNIT OF MEAS	(5) QTY INC IN UNIT	(6) 30-DAY DS, GS MAINT. ALW (A) 1-20	(B) 21-50	(C) 51-100	(7) 1 YR ALWPER (D) EQUIP CNTGCY	(8) DEPOT MAINT ALWPER (E) EQUIP	(9) ILLUSTRATION (A) FIG NO	(B) ITEM NO
		FUNCTIONAL GROUP - 60	BULK MATERIALS	CH-47									
			CONTINUED									BULK	
			SOCKET INSERT										
PA-FZ-Z	5935-805-4989	MS3108R12S3S	96906 CONNECTOR,PLUG,ELECTRICAL.... ENVIRONMENT RESISTANT, 3/4 IN.-20 NEF,INSERT ARRANGEMENT-3,SOCKET INSERT	ABC	EA		*	*	*		*		
PB-FZ-Z	5935-805-4991	MS3106R14S7S	96906 CONNECTOR,PLUG,ELECTRICAL.... ENVIRONMENT RESISTANT,7/8 IN.-20 NEF,INSERT ARRANGEMENT-7,SOCKET INSERT	ABC	EA		*	*	*		*		
PA-FZ-Z	5935-805-4995	MS3100R32-7S	96906 CONNECTOR,RECEPTACLE,..... ELECTRICAL-WALL MTG TYPE, ENVIRONMENT RESISTANT,2 IN.-18 THD,INSERT ARRANGEMENT-7,SOCKET INSERT	ABC	EA		*	*	*		*		
PA-FZ-Z	5935-807-7999	MS3106R28-21P	96906 CONNECTOR,PLUG,ELECTRICAL.... ENVIRONMENT RESISTANT,1-3/4 IN.-18 NEF,INSERT ARRANGEMENT-21,PIN INSERT	ABC	EA		*	*	*		*		
PA-FZ-Z	5935-809-0913	PT06CE14-19S	77820 CONNECTOR,RECEPTACLE.....	ABC	EA		*	*	*		*		
PA-FZ-Z	5935-809-7500	PT06CE12-10S	77820 CONNECTOR,PLUG,ELECTRICAL....	ABC	EA		*	*	*		*		
PA-FZ-Z	5935-809-7506	PT06CE22-55S	77820 CONNECTOR,PLUG,ELECTRICAL....	ABC	EA		*	*	*		*		
PA-FZ-Z	5935-809-7507	PT06CE14-15S	77820 CONNECTOR,PLUG,ELECTRICAL....	ABC	EA		*	*	*		*		
PA-FZ-Z	5935-809-7986	PT06CE24-61P	77820 CONNECTOR,PLUG,ELECTRICAL....	ABC	EA		*	*	*		*		
PA-FZ-Z	5935-810-6560	PT06CE18-32S	77820 CONNECTOR,PLUG,ELECTRICAL....	ABC	EA		*	*	*		*		
PA-FZ-Z	5935-810-6733	PT06CE20-16S	77820 CONNECTOR,PLUG,ELECTRICAL....	ABC	EA		*	*	*		*		
PA-FZ-Z	5935-812-1506	PT06P14-18S	06848 CONNECTOR,PLUG,ELECTRICAL....	ABC	EA		*	*	*		*		
PB-FZ-Z	5999-812-2082	MS24255-20S	96906 CONTACT,ELECTRICAL-COPPER.... ALLOY,FEMALE CONTACT, REMOVABLE,NO.20 CONTACT SIZE	ABC	EA		*	*	*		*		
PB-FZ-Z	5935-813-4716	MS3106R10SL3S	96906 CONNECTOR,PLUG,ELECTRICAL.... ENVIRONMENT RESISTANT,5/8 IN.-24 NEF,INSERT ARRANGEMENT-3,SOCKET INSERT	ABC	EA		*	*	*		*		
PB-FZ-Z	5935-813-4717	MS3106R14S2S	96906 CONNECTOR,PLUG,ELECTRICAL.... ENVIRONMENT RESISTANT,7/8 IN.-20 NEF,INSERT ARRANGEMENT-2,SOCKET INSERT	ABC	EA		*	*	*		*		
PB-HZ-Z	5935-814-2994	MS3116P8-4S	96906 CONNECTOR,PLUG,ELECTRICAL.... CORROSION RESISTANT,0.481 IN.COUPLING ID,7/16 IN.-28 NEF ACCESSORY THD,POTTING FORM,INSERT ARRANGEMENT-4, SOCKET INSERT	ABC	EA		*	*	*		*		
PB-HZ-Z	5935-814-2996	MS3116P20-41S	96906 CONNECTOR,PLUG,ELECTRICAL.... CORROSION RESISTANT,1.260 IN.COUPLING ID,1-3/16 IN.-18 NEF ACCESSORY THD, POTTING FORM,INSERT	ABC	EA		*	*	*		*		

(1) SMR CODE	(2) FEDERAL STOCK NUMBER	(3) DESCRIPTION REFERENCE NUMBER & MFR CODE		USABLE ON CODE CH-47	(4) UNIT OF MEAS	(5) QTY INC IN UNIT	(6) 30-DAY DS/GS MAINT ALW (a) 1-20	(b) 21-50	(c) 51-100	(7) 1-YR ALWPER 100 EQUIP CNTGCY	(8) DEPOT MAINT ALWPER 100 EQUIP	(9) ILLUSTRATION (a) FIG NO	(b) ITEM NO
		FUNCTIONAL GROUP - 60 BULK MATERIALS											
			CONTINUED									BULK	
			ARRANGEMENT-41,SOCKET INSERT										
PB-HZ-Z	5935-814-2997	MS3116P20-41PX	96906 CONNECTOR,PLUG,ELECTRICAL.... CORROSION RESISTANT,1.260 IN.COUPLING ID,1-3/16 IN.-18 NEF ACCESSORY THD, POTTING FORM,INSERT ARRANGEMENT-41,PIN INSERT	ABC	EA		*	*	*		*		
PB-HZ-Z	5935-814-2998	MS3116P20-41P	96906 CONNECTOR,PLUG,ELECTRICAL.... CORROSION RESISTANT,1.260 IN.COUPLING ID,1-3/16 IN.-18 NEF ACCESSORY THD, POTTING FORM,INSERT ARRANGEMENT-41,PIN INSERT	ABC	EA		*	*	*		*		
C PB-HZ-Z	5935-814-4618	MS3116P16-8S	96906 CONNECTOR,PLUG,ELECTRICAL.... CORROSION RESISTANT,1.010 IN.COUPLING ID,15/16 IN.-20 NEF ACCESSORY THD,POTTING FORM,INSERT ARRANGEMENT-8, SOCKET INSERT	ABC	EA		*	*	*		*		
C PB-HZ-Z	5935-814-4619	MS3116P16-26SW	96906 CONNECTOR,PLUG,ELECTRICAL.... CORROSION RESISTANT,1.010 IN.COUPLING ID,15/16 IN.-20 NEF ACCESSORY THD,POTTING FORM,INSERT ARRANGEMENT-26, SOCKET INSERT	ABC	EA		*	*	*		*		
C PB-HZ-Z	5935-814-4620	MS3116P14-5S	96906 CONNECTOR,PLUG,ELECTRICAL.... CORROSION RESISTANT,0.885 IN.COUPLING ID,13/16 IN.-20 NEF ACCESSORY THD,POTTING FORM,INSERT ARRANGEMENT-5, SOCKET INSERT	ABC	EA		*	*	*		*		
PB-FZ-Z	5935-814-4621	MS3116P14-19S	96906 CONNECTOR,PLUG,ELECTRICAL.... CORROSION RESISTANT,0.885 IN.COUPLING ID,13/16 IN.-20 NEF ACCESSORY THD,POTTING FORM,INSERT ARRANGEMENT-19, SOCKET INSERT	ABC	EA		*	*	*		*		
PB-FZ-Z	5935-814-4622	MS3116P14-19P	96906 CONNECTOR,PLUG,ELECTRICAL.... CORROSION RESISTANT,0.885 IN.COUPLING ID,13/16 IN.-20 NEF ACCESSORY THD,POTTING FORM,INSERT ARRANGEMENT-19, PIN INSERT	ABC	EA		*	*	*		*		
C PB-HZ-Z	5935-814-4623	MS3116P12-10S	96906 CONNECTOR,PLUG,ELECTRICAL.... CORROSION RESISTANT,0.761 IN.COUPLING ID,11/16 IN.-24 NEF ACCESSORY THD,POTTING FORM,INSERT ARRANGEMENT-10,	ABC	EA		*	*	*		*		

(1) SMR CODE	(2) FEDERAL STOCK NUMBER	(3) DESCRIPTION REFERENCE NUMBER & MFR CODE		USABLE ON CODE	(4) UNIT OF MEAS	(5) QTY INC IN UNIT	(6) 30-DAY DS/GS MAINT ALW (a) 1-20	(b) 21-50	(c) 51-100	(7) 1 YR ALWPER 100 EQUIP CNTGCY	(8) DEPOT MAINT ALWPER 100 EQUIP	(9) ILLUSTRATION (a) FIG NO	(b) ITEM NO
		FUNCTIONAL GROUP - 60 BULK MATERIALS		CH-47									
			CONTINUED										
			SOCKET INSERT										
PB-HZ-Z	5935-814-5199	MS3110P14-19S	96906 CONNECTOR,RECEPTACLE..... ELECTRICAL-0.120 IN.HOLES, DIA,1.141 IN.H,1.141 IN.W, 1.453 IN.LG,19 CONTACTS, RESISTIVE CHARACTERISTICS	ABC	EA		*	*	*		*	BULK	
PA-FZ-Z	5935-814-6724	MS3100R10SL3P	96906 CONNECTOR,RECEPTACLE,..... ELECTRICAL-WALL MTG TYPE, ENVIRONMENT RESISTANT,5/8 IN.-24 NEF,INSERT ARRANGEMENT-3,PIN INSERT	ABC	EA		*	*	*		*		
PA-FZ-Z	5935-814-9780	MS3106R20-17S	96906 CONNECTOR,PLUG,ELECTRICAL.... ENVIRONMENT RESISTANT,1-1/4 IN.-18 NEF,INSERT ARRANGEMENT-17,SOCKET INSERT	ABC	EA		*	*	*		*		
PB-HZ-Z	5935-814-9781	MS3106R22-14S	96906 CONNECTOR,PLUG,ELECTRICAL.... ENVIRONMENT RESISTANT,1-3/8 IN.-18 NEF,INSERT ARRANGEMENT-14,SOCKET INSERT	ABC	EA		*	*	*		*		
C PA-FZ-Z	5935-815-3378	PT06P8-4SSR	77820 CONNECTOR,PLUG,ELECTRICAL.... 1.761 IN.LG,0.750 IN.DIA, ALUMINUM BASE ALLOY	ABC	EA		*	*	*		*		
C PB-FZ-Z	5935-815-5423	MS3106R18-8S	96906 CONNECTOR,PLUG,ELECTRICAL.... ENVIRONMENT RESISTANT,1-1/8 IN.-18 NEF,INSERT ARRANGEMENT-8,SOCKET INSERT	ABC	EA		*	*	*		*		
PB-FZ-Z	5935-816-4802	MS3106R10SL3P	96906 CONNECTOR,PLUG,ELECTRICAL.... ENVIRONMENT RESISTANT,5/8 IN.-24 NEF,INSERT ARRANGEMENT-3,PIN INSERT	ABC	EA		*	*	*		*		
PB-FZ-Z	5935-818-6807	MS3106R12S3P	96906 CONNECTOR,PLUG,ELECTRICAL.... ENVIRONMENT RESISTANT,3/4 IN.-20 NF,INSERT ARRANGEMENT-3,PIN INSERT	ABC	EA		*	*	*		*		
PB-FZ-Z	5935-820-0555	MS3106R14S5S	96906 CONNECTOR,PLUG,ELECTRICAL.... ENVIRONMENT RESISTANT,7/8 IN.-20 NEF,INSERT ARRANGEMENT-5,SOCKET INSERT	ABC	EA		*	*	*		*		
PA-FZ-Z	5935-821-5543	MS3100R28-21P	96906 CONNECTOR,RECEPTACLE..... ELECTRICAL-WALL MTG TYPE, ENVIRONMENT RESISTANT,1-3/4 IN.-18 THD,INSERT ARRANGEMENT-21,PIN INSERT	ABC	EA		*	*	*		*		
PB-FZ-Z	5935-823-0126	MS3116P22-55P	96906 CONNECTOR,PLUG,ELECTRICAL.... CORROSION RESISTANT,1.385 IN.COUPLING ID,1-5/16 IN.-18 NEF ACCESSORY THD,	ABC	EA		*	*	*		*		

(1) SMR CODE	(2) FEDERAL STOCK NUMBER	(3) DESCRIPTION REFERENCE NUMBER & MFR CODE		USABLE ON CODE CH-47	(4) UNIT OF MEAS	(5) QTY INC IN UNIT	(6) 30-DAY DS GS MAINT ALW (a) 1-20	(b) 21-50	(c) 51-100	(7) 1-YR ALWPER 100 EQUIP CNTGCY	(8) DEPOT MAINT ALWPER 100 EQUIP	(9) ILLUSTRATION (a) FIG NO	(b) ITEM NO
		FUNCTIONAL GROUP - 60 BULK MATERIALS											
			CONTINUED									BULK	
			POTTING FORM,INSERT ARRANGEMENT-55,PIN INSERT										
PA-FZ-Z	5935-823-0337	DPD2-156-33SM	71468 CONNECTOR,RECEPTACLE.....	ABC	EA		*	*	*		*		
PB-HZ-Z	5935-826-1013	MS3112E20-41SX	96906 CONNECTOR,RECEPTACLE,..... ELECTRICAL-0.120 IN.HOLES DIA,1.453 IN.H,1.453 IN.W, 0.962 IN.LG,RESISTIVE CHARACTERISTICS	ABC	EA		*	*	*		*		
PA-FZ-Z	5935-826-1742	PT06P8-2SSR	77820 CONNECTOR,PLUG,ELECTRICAL....	ABC	EA		*	*	*		*		
PB-FZ-Z	5935-826-3698	MS3100R8S1P	96906 CONNECTOR,RECEPTACLE,..... ELECTRICAL-WALL MTG TYPE, ENVIRONMENT RESISTANT,1/2 IN.-28 NEF,INSERT ARRANGEMENT-1,PIN INSERT	ABC	EA		*	*	*		*		
PA-FZ-Z	5935-827-7167	DPA24HV2-33S	71468 CONNECTOR,RECEPTACLE.....	ABC	EA		*	*	*		*		
PA-DZ-Z	5935-835-0508	M39012-16-0001	81349 CONNECTOR,PLUG,ELECTRICAL....	ABC	EA		*	*	*		*		
PA-FZ-Z	5935-835-4339	MS3108R18-1SC	96906 CONNECTOR,PLUG,ELECTRICAL.... ENVIRONMENT RESISTANT, 1-1/8 IN.-18 NEF,INSERT ARRANGEMENT-1,SOCKET INSERT	ABC	EA		*	*	*		*		
PB-HZ-Z	5935-836-1417	MS3116E16-26P	96906 CONNECTOR,PLUG,ELECTRICAL.... CORROSION RESISTANT,1.010 IN.COUPLING ID,15/16 IN.-20 NEF ACCESSORY THD,INSERT ARRANGEMENT-26,PIN INSERT	ABC	EA		*	*	*		*		
PA-FZ-Z	5935-837-5966	UG710CU	81349 CONNECTOR,PLUG,ELECTRICAL....	ABC	EA		*	*	*		*		
PB-FZ-Z	5935-838-8419	M39012-06-0002	81349 CONNECTOR,PLUG,ELECTRICAL....	ABC	EA		*	*	*		*		
PB-FZ-Z	5935-841-5838	MS3100R18-8S	96906 CONNECTOR,RECEPTACLE,..... ELECTRICAL-WALL MTG TYPE, ENVIRONMENT RESISTANT,1-1/8 IN.-18 NEF,INSERT ARRANGEMENT-8,SOCKET INSERT	ABC	EA		*	*	*		*		
C PA-FZ-Z	5935-842-3100	MS3100R28-21S	96906 CONNECTOR,RECEPTACLE,..... ELECTRICAL-ENVIRONMENT RESISTANT,1-3/4 IN.-18 NEF, INSERT ARRANGEMENT-21, SOCKET INSERT	ABC	EA		*	*	*		*		
PB-FZ-Z	5935-843-2099	MS3116P22-21S	96906 CONNECTOR,PLUG,ELECTRICAL.... CORROSION RESISTANT,1.385 IN.COUPLING ID,1-5/16 IN.-18 NEF ACCESSORY THD, POTTING FORM,INSERT ARRANGEMENT-21,SOCKET INSERT	ABC	EA		*	*	*		*		
PA-FZ-Z	5935-845-2891	MRE9SGVL	81312 CONNECTOR,RECEPTACLE.....	ABC	EA		*	*	*		*		
PB-HZ-Z	5935-846-2329	MS3106R20-27S	96906 CONNECTOR,PLUG,ELECTRICAL.... ENVIRONMENT RESISTANT,1-1/4 IN.-18 NEF,INSERT	ABC	EA		*	*	*		*		

(1) SMR CODE	(2) FEDERAL STOCK NUMBER	(3) DESCRIPTION REFERENCE NUMBER & MFR CODE		USABLE ON CODE	(4) UNIT OF MEAS.	(5) QTY INC IN UNIT	(6) 30-DAY DS/GS MAINT ALW (a) 1-20	(b) 21-50	(c) 51-100	(7) 1YR ALWPER 100 EQUIP CNTRCCY	(8) DEPOT MAINT ALWPER 100 EQUIP	(9) ILLUSTRATION (a) FIG NO	(b) ITEM NO
		FUNCTIONAL GROUP - 60	BULK MATERIALS	CH-47									
			CONTINUED									BULK	
			ARRANGEMENT-27,SOCKET INSERT										
PB-HZ-Z	5935-846-8101	MS3108R24-7SC	96906 CONNECTOR,PLUG,ELECTRICAL.... ENVIRONMENT RESISTANT,1-1/2 IN.-18 NEF,INSERT	ABC	EA		*	*	*		*		
			ARRANGEMENT-7,SOCKET INSERT										
PA-FZ-Z	5935-847-1554	MS3106R10S2SC	96906 CONNECTOR,PLUG,ELECTRICAL.... ENVIRONMENT RESISTANT,5/8 IN.-24 NEF,INSERT	ABC	EA		*	*	*		*		
			ARRANGEMENT-2,SOCKET INSERT										
PB-FZ-Z	5935-847-2600	MS35368-306B	96906 ADAPTER,CONNECTOR-COPPER BASE ALLOY INCLOSING SHELL, CORROSION RESISTANT, WEATHERPROOF,BAYONET LATCH TYPE,90 DEG ANGLE,2 CONTACTS,2 CONNECTOR MATING ENDS,0.890 IN.W,1.062 IN. LG,0.562 IN.H	ABC	EA		*	*	*		*		
PB-FZ-Z	5935-849-4268	MS3106R8S1S	96906 CONNECTOR,PLUG,ELECTRICAL.... ENVIRONMENT RESISTANT,1/2 IN.-28 NEF,INSERT	ABC	EA		*	*	*		*		
			ARRANGEMENT-1,SOCKET INSERT										
PA-FZ-Z	5935-850-1759	MS3106R12-5SC	96906 CONNECTOR,PLUG,ELECTRICAL.... ENVIRONMENT RESISTANT, 3/4 IN.-20 NEF,INSERT	ABC	EA		*	*	*		*		
			ARRANGEMENT-5,SOCKET INSERT										
PA-FZ-Z	5935-851-0221	MS3116E14-5S	96906 CONNECTOR,PLUG,ELECTRICAL.... CORROSION RESISTANT,0.885 IN.COUPLING ID,13/16 IN.-20 NEF ACCESSORY THD,INSERT	ABC	EA		*	*	*		*		
			ARRANGEMENT-5,SOCKET INSERT										
PB-HZ-Z	5935-851-0238	MS3112E20-41SW	96906 CONNECTOR,RECEPTACLE,..... ELECTRICAL-0.120 IN.HOLES DIA,1.453 IN.H,1.453 IN.W, 1.056 IN.LG,41 CONTACTS, RESISTIVE CHARACTERISTICS	ABC	EA		*	*	*		*		
PB-HZ-Z	5935-851-9080	MS3106R32-7S	96906 CONNECTOR,PLUG,ELECTRICAL.... 2.219 IN.DIA,2.000 IN.-18 THD,CABLE ACCOMMODATION	ABC	EA		*	*	*		*		
PA-FZ-Z	5935-853-3320	MS3100R28-9P	96906 CONNECTOR,PLUG,ELECTRICAL.... WALL MTG TYPE,ENVIRONMENT RESISTANT,1-3/4 IN.-18 THD, INSERT ARRANGEMENT-9,PIN INSERT	ABC	EA		*	*	*		*		
PA-FZ-Z	5935-874-3431	1406H90	95238 SHIELD,ELECTRICAL.....	ABC	EA		*	*	*		*		
PA-FZ-Z	5935-877-5833	PT07P8-4S	77820 CONNECTOR,PLUG,ELECTRICAL....	ABC	EA		*	*	*		*		
PA-FZ-Z	5935-877-6735	JT06RE16-26SSR	77820 CONNECTOR,PLUG,ELECTRICAL....	ABC	EA		*	*	*		*		
C PA-FZ-Z	5935-878-1452	PT08CE14-15S	77820 CONNECTOR,PLUG,ELECTRICAL....	ABC	EA		*	*	*		*		

(1) SMR CODE	(2) FEDERAL STOCK NUMBER	(3) DESCRIPTION REFERENCE NUMBER & MFR CODE		USABLE ON CODE CH-47	(4) UNIT OF MEAS	(5) QTY INC IN UNIT	(6) 30-DAY DS/GS MAINT ALW (a) 1-20	(b) 21-50	(c) 51-100	(7) 1-YR ALWPER 100 EQUIP CNTGCY	(8) DEPOT MAINT ALWPER 100 EQUIP	(9) ILLUSTRATION (a) FIG NO	(b) ITEM NO
		FUNCTIONAL GROUP - 60	BULK MATERIALS										
PA-FZ-Z	5935-879-0236	MS3106R28-9S	96906 CONNECTOR,PLUG,ELECTRICAL.... ENVIRONMENT RESISTANT, 1-3/4 IN.-18 THD,INSERT ARRANGEMENT-9,SOCKET INSERT	ABC	EA		*	*	*		*	BULK	
PA-FZ-Z	5935-879-1572	MS3106R16-11S	96906 CONNECTOR,PLUG,ELECTRICAL.... ENVIRONMENT RESISTANT, 1 IN.-20 NEF,INSERT ARRANGEMENT-11,SOCKET INSERT	ABC	EA		*	*	*		*		
PA-FZ-Z	5935-880-7894	MS3120E14-19S	96906 CONNECTOR,RECEPTACLE..... ELECTRICAL-WALL MTG TYPE, CORROSION RESISTANT,0.875 IN.OD,13/16 IN.-20 NEF ACCESSORY THD,INSERT ARRANGEMENT-19,SOCKET INSERT	ABC	EA		*	*	*		*		
PA-FZ-Z	5935-881-1818	MS3108R20-17S	96906 CONNECTOR,PLUG,ELECTRICAL.... ENVIRONMENT RESISTANT, 1-1/4 IN.-18 THD,INSERT ARRANGEMENT-17,SOCKET INSERT	ABC	EA		*	*	*		*		
PA-FZ-Z	5935-891-8475	MS3137E7-50S	96906 CONNECTOR,PLUG,ELECTRICAL....	ABC	EA		*	*	*		*		
PA-FZ-Z	5935-894-9488	MS3116P24-61SW	96906 CONNECTOR,PLUG,ELECTRICAL.... CORROSION RESISTANT,1.510 IN.COUPLING ID,1-7/16 IN.-18 NEF ACCESSORY THD, POTTING FORM,INSERT ARRANGEMENT-61,SOCKET INSERT	ABC	EA		*	*	*		*		
XB-FZ-Z		MS3100R36-7SYC	96906 CONNECTOR,RECEPTACLE,..... ELECTRICAL-WALL MTG TYPE, ENVIRONMENT RESISTANT,2-1/4 IN.-16N,INSERT ARRANGEMENT-7,SOCKET INSERT	ABC	EA								
XB-FZ-Z		05-0420-02	91662 CONNECTOR PLUG,ELECTRICAL....	ABC	EA		*	*	*		*		
PA-FZ-Z	5935-897-9834	1406-55SQ	95238 CONNECTOR,PLUG,ELECTRICAL....	ABC	EA		*	*	*		*		
N PA-FZ-Z	5935-901-0911	MS3120E24-61SW	96906 CONNECTOR,RECEPTACLE.....	ABC	EA		*	*	*		*		
PA-FZ-Z	5935-901-0923	MS3120E22-21S	96906 CONNECTOR,RECEPTACLE,..... ELECTRICAL-WALL MTG TYPE, CORROSION RESISTANT,1.375 IN.OD,1-5/16 IN.-18 NEF ACCESSORY THD,INSERT ARRANGEMENT-21,SOCKET INSERT	ABC	EA		*	*	*		*		
R PB-FZ-Z	5999-901-3239	MS24254-20P	96906 CONTACT,ELECTRICAL-COPPER.... ALLOY,CRIMP PIN,REMOVABLE, NO.20 CONTACT SIZE	ABC	EA		*	*	*		*		
PA-FZ-Z	5935-901-3828	DPA29C1-33SA101	71468 CONNECTOR,RECEPTACLE.....	ABC	EA		*	*	*		*		
PA-FZ-Z	5935-901-8030	PT06CE16-23S	77820 CONNECTOR,PLUG,ELECTRICAL....	ABC	EA		*	*	*		*		
N PA-FZ-Z	5935-901-8873	MS3126E16-8S	96906 CONNECTOR,PLUG,ELECTRICAL....	ABC	EA		*	*	*		*		

(1) SMR CODE	(2) FEDERAL STOCK NUMBER	(3) DESCRIPTION REFERENCE NUMBER & MFR CODE		USABLE ON CODE	(4) UNIT OF MEAS	(5) QTY INC IN UNIT	(6) 30-DAY DS/GS MAINT ALW (a) 1-20	(b) 21-50	(c) 51-100	(7) 1-YR ALWPER 100 EQUIP CNTGCY	(8) DEPOT MAINT ALWPER 100 EQUIP	(9) ILLUSTRATION (a) FIG NO	(b) ITEM NO
		FUNCTIONAL GROUP - 60	BULK MATERIALS	CH-47									
			CONTINUED CORROSION RESISTANT,15/16 -20 IN.-20 THD,1.513 IN.LG, 1.281 IN.DIA.									BULK	
PA-FZ-Z	5935-902-2363	MS3126E16-26S	96906 CONNECTOR,PLUG,ELECTRICAL,.... CORROSION RESISTANT,1.010 IN.COUPLING ID,15/16 IN.-20 NEF ACCESSORY THD, INSERT ARRANGEMENT-26, SOCKET INSERT	ABC	EA		*	*	*		*		
PA-FZ-Z	5935-902-2937	MS3120E22-21P	96906 CONNECTOR,RECEPTACLE..... ELECTRICAL-WALL MTG TYPE, CORROSION RESISTANT,1.375 IN.OD,1-5/16 IN.-18 NEF ACCESSORY THD,INSERT ARRANGEMENT-21,PIN INSERT	ABC	EA		*	*	*		*		
PA-FZ-Z	5935-902-5364	MS3120E16-26S	96906 CONNECTOR,RECEPTACLE,..... ELECTRICAL-WALL MTG TYPE, CORROSION RESISTANT,1 IN. OD,15/16 IN.-20 NEF ACCESSORY THD,INSERT ARRANGEMENT-26,SOCKET INSERT	ABC	EA		*	*	*		*		
PB-FZ-Z	5999-905-1879	MS24254-12P	96906 CONTACT,ELECTRICAL-COPPER.... ALLOY,CRIMP PIN,REMOVABLE, NO.12 CONTACT SIZE	ABC	EA		*	*	*		*		
PA-FZ-Z	5935-913-2172	MS3120E14-19SW	96906 CONNECTOR,RECEPTACLE,..... ELECTRICAL	ABC	EA		*	*	*		*		
N PA-FZ-Z	5935-912-9729	MS3126E14-15SX	96906 CONNECTOR,PLUG,ELECTRICAL....	ABC	EA		*	*	*		*		
PA-FZ-Z	5935-926-7460	UG291DU	80058 CONNECTOR,RECEPTACLE.....	ABC	EA		*	*	*		*		
N XB-FZ-Z		MS3126E20-39PX	96906 CONNECTOR,PLUG,ELECTRICAL....	ABC	EA								
N XB-FZ-Z		MS3126E16-8SW	96906 CONNECTOR,PLUG,ELECTRICAL....	ABC	EA								
PA-FZ-Z	5935-936-8091	PT01CE12-10P	77820 CONNECTOR,PLUG,ELECTRICAL....	ABC	EA		*	*	*		*		
XB-FZ-Z		KS89-41	91836 ADAPTER,CONNECTOR.....	ABC	EA								
PA-FZ-Z	5935-947-3502	MRA41SG7	81312 CONNECTOR,ELECTRICAL.....	ABC	EA		*	*	*		*		
PA-FZ-Z	5935-950-5633	PT06CE18-32P	77820 CONNECTOR,PLUG,ELECTRICAL....	ABC	EA		*	*	*		*		
PA-FZ-Z	5935-952-8259	KS89-31	91836 ADAPTER,CONNECTOR.....	ABC	EA		*	*	*		*		
PA-FZ-Z	5935-957-1665	PT06CE22-21P	77820 CONNECTOR,PLUG,ELECTRICAL....	ABC	EA		*	*	*		*		
PA-FZ-Z	5935-965-7034	PTB24-61PSW	77820 ADAPTER,CONNECTOR.....	ABC	EA		*	*	*		*		
PA-FZ-Z	5935-965-8984	PT06CE16-26SW	77820 CONNECTOR,PLUG,ELECTRICAL....	ABC	EA		*	*	*		*		
PA-FZ-Z	5935-972-5475	MS3106R10SL4S	96906 CONNECTOR,PLUG,ELECTRICAL-... ENVIRONMENT RESISTANT,5/8 IN.-24 NEF,INSERT ARRANGEMENT-4,SOCKET INSERT	ABC	EA		*	*	*		*		
PB-FZ-Z	5999-975-0554	MS24255-12S	96906 CONTACT,ELECTRICAL CONNECTOR. COPPER ALLOY,CRIMP BARREL DESIGN,REMOVABLE, NO.16 CONTACT	ABC	EA		*	*	*		*		
PA-FZ-Z	5935-984-8916	PT06CE8-4PSR	77820 CONNECTOR,PLUG,ELECTRICAL....	ABC	EA		*	*	*		*		
PA-FZ-Z	5935-985-0434	PT06CE20-41P	77820 CONNECTOR,PLUG,ELECTRICAL....	ABC	EA		*	*	*		*		

	(1) SMR CODE	(2) FEDERAL STOCK NUMBER	(3) DESCRIPTION — REFERENCE NUMBER & MFR CODE		USABLE ON CODE	(4) UNIT OF MEAS	(5) QTY INC IN UNIT	(6) 30-DAY DS/GS MAINT ALW (a) 1-20	(b) 21-50	(c) 51-100	(7) 1-YR ALWPER 100 EQUIP CNTGCY	(8) DEPOT MAINT ALWPER 100 EQUIP	(9) ILLUSTRATION (a) FIG NO	(b) ITEM NO
			FUNCTIONAL GROUP - 60	BULK MATERIALS	CH-47									
	PA-FZ-Z	5935-985-0439	PT06CE14-19P	77820 CONNECTOR,PLUG,ELECTRICAL....	ABC	EA		*	*	*		*	BULK	
	PA-FZ-Z	5935-985-0444	PT06CE24-61S	77820 CONNECTOR,PLUG,ELECTRICAL....	ABC	EA		*	*	*		*		
	PA-FZ-Z	5935-988-3539	MS3126E18-32P	96906 CONNECTOR,PLUG,ELECTRICAL.... CORROSION RESISTANT,1.136 IN.COUPLING ID,1-1/16 IN.-18 NEF ACCESSORY THD, INSERT ARRANGEMENT-32,PIN INSERT	ABC	EA		*	*	*		*		
	PA-FZ-Z	5935-988-3540	MS3126E18-32S	96906 CONNECTOR,PLUG,ELECTRICAL.... CORROSION RESISTANT,1.136 IN.COUPLING ID,1-1/16 IN.-18 NEF ACCESSORY THD, INSERT ARRANGEMENT-32, SOCKET INSERT	ABC	EA		*	*	*		*		
R	PB-FZ-Z	5999-988-5414	MS3192-12A	96906 CONTACT,ELECTRICAL-COPPER.... ALLOY,CRIMP PIN,REMOVABLE, NO.12 CONTACT SIZE	ABC	EA		*	*	*		*		
	PA-FZ-Z	5935-988-8488	PT06CE14-19SSR	77820 CONNECTOR,PLUG,ELECTRICAL....	ABC	EA		*	*	*		*		
	PB-FZ-Z	5940-063-0829	MS18121-415	96906 FERRULE,ELECTRICAL.....	ABC	EA		*	*	*		*		
C	PA-OZ-Z	5940-082-4642	MS18029-11S20	96906 COVER,TERMINAL BOARD,..... PLASTIC,0.813 IN.W,12.334 IN.LG,0.234 IN.H,2 MTG HOLES,0.479 IN.DIA COMP	ABC	EA		*	*	*		*		
	PA-OZ-Z	5940-082-5023	MS18029-12S16	96906 COVER,TERMINAL BOARD..... PLASTIC,1.063 IN.W,12.454 IN.LG,0.234 IN.H,2 MTG HOLES,0.479 IN.DIA	ABC	EA		*	*	*		*		
	PA-OZ-Z	5940-113-8179	MS25036-107	96906 TERMINAL,LUG-COPPER..... INSULATED,CRIMP TYPE,0.910 IN.LG,NO.16-14 AWG, FOR NO.6 STUD	ABC	EA		*	*	*		*		
	PA-OZ-Z	5940-113-8183	MS25036-113	96906 TERMINAL,LUG-COPPER,..... INSULATED,CRIMP TYPE,1.322 IN.LG,NO.12-10 AWG,FOR 5/16 IN.STUD COMP	ABC	EA		*	*	*		*		
	PA-OZ-Z	5940-113-8184	MS25036-150	96906 TERMINAL,LUG-COPPER,..... INSULATED,CRIMP TYPE,1.090 IN.LG,NO.22-18 AWG,FOR 1/4 IN.STUD COMP	ABC	EA		*	*	*		*		
	PA-HZ-Z	5940-113-8190	MS25036-122	96906 TERMINAL,LUG-COPPER,..... INSULATED,CRIMP TYPE,1.762 IN.LG,NO.6 AWG,FOR 3/8 IN.STUD	ABC	PG		*	*	*		*		
N	PA-OZ-Z	5940-113-9828	MS25036-148	96906 TERMINAL,LUG-COPPER..... INSULATED,CRIMP TYPE,0.755 IN.LG,NO.18 AWG	ABC	EA		*	*	*		*		
	PA-FZ-Z	5940-114-1305	MS25036-116	96906 TERMINAL,LUG-COPPER..... INSULATED,CRIMP TYPE,1.466 IN.LG,NO.8 AWG,FOR 1/4 IN. STUD	ABC	EA		*	*	*		*		
	PA-FZ-Z	5940-114-1306	MS25036-117	96906 TERMINAL,LUG-COPPER,.....	ABC	EA		*	*	*		*		

(1) SMR CODE	(2) FEDERAL STOCK NUMBER	(3) DESCRIPTION REFERENCE NUMBER & MFR CODE		USABLE ON CODE	(4) UNIT OF MEAS	(5) QTY INC IN UNIT	(6) 30-DAY DS/GS MAINT ALW (a) 1-20	(b) 21-50	(c) 51-100	(7) 1-YR ALWPER 100 EQUIP CNTGCY	(8) DEPOT MAINT ALWPER 100 EQUIP	(9) ILLUSTRATION (a) FIG NO	(b) ITEM NO
		FUNCTIONAL GROUP - 60 BULK MATERIALS		CH-47									
			CONTINUED INSULATED,CRIMP TYPE,1.703 IN.LG,NO.8 AWG,FOR 5/16 IN. STUD									BULK	
PA-FZ-Z	5940-115-2678	MS20659-111	96906 TERMINAL,LUG-COPPER,CRIMP.... TYPE,1.406 IN.LG,NO.4 AWG, FOR 1/4 IN.STUD	ABC	EA		*	*	*		*		
PA-OZ-Z	5940-143-4771	MS25036-103	96906 TERMINAL,LUG-COPPER..... INSULATED,CRIMP TYPE,1.050 IN.LG,NO.22-18 AWG,FOR NO.10 STUD	ABC	EA		*	*	*		*		
PA-OZ-Z	5940-143-4774	MS25036-153	96906 TERMINAL,LUG-COPPER,..... INSULATED,CRIMP TYPE,0.910 IN.LG,NO.16-14 AWG, FOR NO.8 STUD COMP	ABC	EA		*	*	*		*		
PA-OZ-Z	5940-143-4775	MS25036-156	96906 TERMINAL,LUG-COPPER..... INSULATED,CRIMP TYPE,1.120 IN.LG,NO.12-10 AWG, FOR NO.8 STUD COMP	ABC	EA		*	*	*		*		
PA-OZ-Z	5940-143-4777	MS25036-157	96906 TERMINAL,LUG-COPPER,..... INSULATED,CRIMP TYPE,1.322 IN.LG,NO.12-10 AWG, FOR 1/4 IN.STUD COMP	ABC	EA		*	*	*		*		
XB-OZ-Z		MS25036-108	96906 TERMINAL,LUG-COPPER,..... INSULATED,CRIMP TYPE,0.915 IN.LG,NO.16-14 AWG, FOR NO.10 STUD	ABC	EA								
PA-OZ-Z	5940-143-4793	MS25036-110	96906 TERMINAL,LUG-COPPER,INSULATED CRIMP TYPE,1.375 IN.LG, NO.16-14 AWG,FOR 3/8 IN.STUD	ABC	EA		*	*	*		*		
PA-OZ-Z	5940-143-5284	MS25036-115	96906 TERMINAL,LUG-COPPER..... INSULATED,CRIMP TYPE,1.402 IN.LG,NO.8 AWG,FOR NO.10 STUD	ABC	EA		*	*	*		*		
PA-FZ-Z	5940-176-7368	YAV4CRS3	09922 TERMINAL,LUG.....	ABC	EA		*	*	*		*		
PA-FZ-Z	5940-176-7572	323153	00779 TERMINAL,LUG.....	ABC	EA		*	*	*		*		
PA-FZ-Z	5940-177-4281	35681	00779 TERMINAL,LUG.....	ABC	EA		*	*	*		*		
PA-OZ-Z	5940-204-8966	MS25036-102	96906 TERMINAL,LUG-COPPER,..... INSULATED,CRIMP TYPE,0.865 IN.LG,NO.22-18 AWG, FOR NO.6 STUD COMP	ABC	EA		*	*	*		*		
PA-OZ-Z	5940-204-8990	MS25036-111	96906 TERMINAL,LUG-COPPER,..... INSULATED,CRIMP TYPE,1.120 IN.LG,NO.12-10 AWG,FOR NO.6 STUD COMP	ABC	EA		*	*	*		*		
PB-HZ-Z	5940-229-7564	AN5538-2	88044 TERMINAL,LUG-BRASS,CRIMP..... TYPE,31/32 IN.LG,NO.6 AWG, FOR NO.10 STUD	ABC	EA		*	*	*		*		
PA-FZ-Z	5940-236-1572	32445	00779 TERMINAL,LUG.....	ABC	EA		*	*	*		*		

(1) SMR CODE	(2) FEDERAL STOCK NUMBER	(3) DESCRIPTION / REFERENCE NUMBER & MFR CODE		USABLE ON CODE	(4) UNIT OF MEAS	(5) QTY INC IN UNIT	(6) 30-DAY DS/GS MAINT ALW (a) 1-20	(b) 21-50	(c) 51-100	(7) 1-YR ALWPER 100 EQUIP CNTGCY	(8) DEPOT MAINT ALWPER 10% EQUIP	(9) ILLUSTRATION (a) FIG NO	(b) ITEM NO
		FUNCTIONAL GROUP - 60	BULK MATERIALS										
PA-OZ-Z	5940-283-5280	MS25036-106	96906	TERMINAL,LUG-COPPER,..... INSULATED,CRIMP TYPE,0.774 IN.LG,NO.16-14 AWG,FOR NO.6 STUD COMP	ABC	EA		*	*	*		*	BULK	
PA-FZ-Z	5940-283-5281	MS25036-9	96906	TERMINAL,LUG-COPPER,..... INSULATED,CRIMP TYPE,1.250 IN.LG,NO.16-14 AWG,FOR 5/16 IN.STUD	ABC	EA		*	*	*		*		
PA-FZ-Z	5940-500-8723	MS25181-3	96906	SPLICE,CONDUCTOR-COPPER..... INSULATED,NO.12-10 AWG, 1.903 IN.LG,0.340 IN.DIA, PERMANENT TYPE	ABC	EA		*	*	*		*		
PB-HZ-Z	5940-502-7570	AN5538-1	88044	TERMINAL LUG-BRASS,CRIMP..... TYPE,31/32 IN.LG,NO.8 AWG, FOR NO.8 STUD	ABC	EA		*	*	*		*		
PA-OZ-Z	5940-502-8806	MS25181-2	96906	SPLICE,CONDUCTOR-COPPER,..... INSULATED,BLUE,PERMANENT CRIMP TYPE,NO.16-14 AWG WIRE SIZE,1.526 IN.LG	ABC	EA		*	*	*		*		
C PA-OZ-Z	5940-813-0698	MS25036-101	96906	TERMINAL,LUG-COPPER,..... INSULATED,CRIMP TYPE,0.755 IN.LG,NO.22-18 AWG FOR NO.6 STUD	ABC	EA		*	*	*		*		
PB-FZ-Z	5940-549-6220	MS21981-080	96906	FERRULE,RADIO,FREQUENCY.....	ABC	EA		*	*	*		*		
PA-FZ-Z	5940-549-6703	TE55-6-25	14170	TERMINAL,LUG.....	ABC	EA		*	*	*		*		
PB-FZ-Z	5940-553-2713	DX518683-3	14418	FERRULE,RADIO,FREQUENCY..... CABLE,GROUNDING MIL-F-21608,TYPE 2,CLASS 2	ABC	EA		*	*	*		*		
PA-OZ-Z	5940-557-1629	MS25036-149	96906	TERMINAL,LUG-COPPER,..... INSULATED,CRIMP TYPE,0.910 IN.LG,NO.22-18 AWG,FOR NO.8 STUD COMP	ABC	EA		*	*	*		*		
PA-FZ-Z	5940-557-4338	MS25036-125	96906	TERMINAL,LUG-COPPER,..... INSULATED,CRIMP TYPE,1.879 IN.LG,NO.4 AWG,FOR 3/8 IN. STUD	ABC	EA		*	*	*		*		
PA-FZ-Z	5940-557-4344	MS25036-120	96906	TERMINAL,LUG-COPPER,..... INSULATED,CRIMP TYPE,1.859 IN.LG,NO.6 AWG,FOR 1/4 IN. STUD	ABC	EA		*	*	*		*		
C PA-FZ-Z	5940-557-4345	MS25036-18	96906	TERMINAL,LUG-COPPER,..... INSULATED,CRIMP TYPE,1.703 IN.LG,NO.8 AWG,FOR 3/8 IN.STUD	ABC	EA		*	*	*		*		
PB-FZ-Z	5940-557-7653	MS25226-4-2	96906	LINK,TERMINAL CONNECTING..... COPPER,0.438 IN.W,1.138 IN. LG,0.051 IN.THK,2 MTG HOLES 0.219 IN.DIA,0.750 IN.C TO C,STUD SIZE NO.10,70 AMP	ABC	EA		*	*	*		*		
PB-OZ-Z	5940-557-7656	MS25226-4-3	96906	LINK,TERMINAL CONNECTING.....	ABC	EA		*	*	*		*		

(1) SMR CODE	(2) FEDERAL STOCK NUMBER	(3) DESCRIPTION REFERENCE NUMBER & MFR CODE		USABLE ON CODE	(4) UNIT OF MEAS	(5) QTY INC IN UNIT	(6) 30-DAY DS/GS MAINT ALW (a) 1-20	(b) 21-50	(c) 51-100	(7) 1-YR ALWPER 100 EQUIP CNTGCY	(8) DEPOT MAINT ALWPER 100 EQUIP	(9) ILLUSTRATION (a) FIG NO	(b) ITEM NO
		FUNCTIONAL GROUP - 60	BULK MATERIALS	CH-47									
			CONTINUED									BULK	
			COPPER,CADMIUM PLATED,70 AMP CAPACITY,0.438 IN.W, 1.938 IN.LG,0.051 IN.THK,3 HOLES,NO.10 STUD SIZE										
PA-HZ-Z	5940-577-3807	MS25036-145	96906 TERMINAL,LUG-COPPER,..... INSULATED,CRIMP TYPE,0.850 IN.LG,NO.26-24 AWG, FOR NO.6 STUD COMP	ABC	EA		*	*	*		*		
PA-FZ-Z	5940-581-4328	322047	00779 TERMINAL,LUG-COPPER,TINNED... FINISH,INSULATED,NO.8 AWG, 0.484 IN.W,1.562 IN.LG, 0.377 IN.H,FOR NO.8 STUD	ABC	EA		*	*	*		*		
PA-FZ-Z	5940-611-3944	AN753-2	88044 SPLICE SET,QUICK DISCONNECT.. COMP	ABC	EA		*	*	*		*		
PA-FZ-Z	5940-636-7360	AN753B2	88044 SPLICE,CONDUCTOR.....	ABC	EA		*	*	*		*		
PB-FZ-Z	5940-666-2741	MS21981-22	96906 FERRULE,ELECTRICAL.....	ABC	EA		*	*	*		*		
PA-FZ-Z	5940-666-3601	YAEV6CRS1	09922 TERMINAL,LUG.....	ABC	EA		*	*	*		*		
PA-FZ-Z	5940-681-1514	MS25226-4-6	96906 LINK,TERMINAL CONNECTING..... COPPER,0.438 IN.W,0.750 IN. THK,NO.10 STUD SIZE	ABC	EA		*	*	*		*		
PA-FZ-Z	5940-681-9718	BACT12C15	81205 SPLICE,CONDUCTOR.....	ABC	EA		*	*	*		*		
PA-FZ-Z	5940-686-5100	MS2J226-2-20	96906 LINK,TERMINAL CONNECTING..... COPPER,40 AMP,1/4 IN.W, 11.724 IN.LG,0.032 IN.THK, 20 MTG HOLES,NO.6 STUD SIZE COMP	ABC	EA		*	*	*		*		
PB-OZ-Z	5940-729-7230	323932	89110 FERRULE,ELECTRICAL CONDUCTOR. BRASS,TINNED FINISH,OPEN END,SOLDER TYPE CONNECTION, COLOR CODED BROWN,0.110 IN. ID,0.294 IN.OD,0.312 IN.LG, FOR NO.10 AWG	ABC	EA		*	*	*		*		
PA-OZ-Z	5940-813-0698	MS25036-101	96906 TERMINAL,LUG-COPPER..... INSULATED,CRIMP TYPE,0.875 IN.LG,NO.22-18 AWG, FOR NO.6 STUD COMP	ABC	EA		*	*	*		*		
PA-FZ-Z	5940-877-9111	MS27429-3	96906 TERMINAL,QUICK DISCONNECT.... COPPER,INSULATED BARREL, YELLOW,CRIMP TYPE,NO.12-10 AWG WIRE SIZE COMP	ABC	EA		*	*	*		*		
XB-FZ-Z		MS18029-24	96906 NUT ASSEMBLY.....	ABC	EA								
C PA-FZ-Z	5940-892-3137	MS25435-27	96906 TERMINAL,LUG.....	ABC	EA		*	*	*		*		
PA-FZ-Z	5940-907-5938	MS18029-22	96906 NUT ASSEMBLY,TERMINAL BOARD.. PLASTIC,W/CRES INSERT,NO. 10-32 NF,W/MS16624-40 RETAINING RING	ABC	EA		*	*	*		*		
PA-OZ-Z	5940-907-5939	MS18029-21	96906 NUT ASSEMBLY,TERMINAL BOARD.. PLASTIC,W/CRES INSERT,NO. 6-32 NC,W/MS16624-40	ABC	EA		*	*	*		*		

(1) SMR CODE	(2) FEDERAL STOCK NUMBER	(3) DESCRIPTION REFERENCE NUMBER & MFR CODE		USABLE ON CODE CH-47	(4) UNIT OF MEAS	(5) QTY INC IN UNIT	(6) 30-DAY DS GS MAINT ALW (a) 1-20	(b) 21-50	(c) 51-100	(7) 1-YR ALWPER 100 EQUIP CNTGCY	(8) DEPOT MAINT ALWPER 100 EQUIP	(9) ILLUSTRATION (a) FIG NO	(b) ITEM NO
		FUNCTIONAL GROUP - 60	BULK MATERIALS									BULK	
			CONTINUED										
			RETAINING RING COMP										
PA-FZ-Z	5940-938-3269	320306	00779 TERMINAL,LUG.....	ABC	EA		*	*	*		*		
PA-FZ-Z	5940-950-1610	MS27212-1-20	96906 TERMINAL BOARD-PLASTIC,0.688. IN.W,12,334 IN.LG,0.905 IN. H.20 CRES STUDS,NO.6-32 NC, W/20 FLAT WASHERS,LOCK WASHERS & NUTS,HOLES,0.115 IN.DIA COMP	ABC	EA		*	*	*		*		
PB-FZ-Z	5940-950-7784	MS27212-2-16	96906 TERMINAL BOARD-PLASTIC,0.938. IN.W,12.454 IN.LG,1.035 IN. H,16 CRES STUDS,NO.10-32 NF,W/16 FLAT WASHERS,LOCK WASHERS & NUTS,16 MTG HOLES,0.120 IN.DIA	ABC	EA		*	*	*		*		
R PA-OZ-Z	5970-815-1300	BACT63A59-0	81205 INSULATION SLEEVING..... ELECTRICAL COMP	ABC	IN		*	*	*		*		
PB-OZ-Z	5970-181-0306	N064-1IN	76381 INSULATION TAPE,ELECTRICAL... FIBERGLASS,TEFLON COATING, ADHESIVE,5000 V DIELECTRIC STRENGTH,1 IN.W,108 FT LG, 0.006 IN.THK	ABC	FT		*	*	*		*		
C PB-FZ-Z	5970-235-2725	BA10326-302	64959 INSULATION SLEEVING,..... ELECTRICAL-VINYL PLASTIC, FLEXIBLE,CLEAR,200 V,NO.2 AWG WIRE SIZE,MILDEW RESISTANT,0.275 IN.ID,0.020 IN.WALL THK,MINUS 90 DEG F TEMP RATING,MIL-I-7444,TYPE 1,CLASS 1	ABC	FT		*	*	*		*		
PA-OZ-Z	5970-235-2728	8034658-23	18876 INSULATION SLEEVING,..... ELECTRICAL-PLASTIC, FLEXIBLE,NONSHRINKABLE, CLEAR,TRANSPARENT,200 V,3/8 IN.WIRE SIZE,0.375 IN.ID, 0.022 IN.WALL THK, MIL-I-7444,TYPE 1,CLASS 1	ABC	FT		*	*	*		*		
PA-OZ-Z	5970-285-0490		81349 INSULATION SLEEVING..... ELECTRICAL-GLASS FIBER, SILICONE RUBBER COATING & IMPREGNATED,FLEXIBLE,NO.1 AWG WIRE SIZE,0.289 IN.ID, 0.030 IN.WALL THK,36 IN.TO 42 IN.LG,MIL-I-18057	ABC	IN		*	*	*		*		
PA-OZ-Z	5970-417-5870	4744405P9	24446 INSULATION TAPE,ELECTRICAL... COMP	ABC	EA		*	*	*		*		
PB-FZ-Z	5970-524-6759	MS25054-1B	96906 INSULATOR,FEEDTHRU.....	ABC	EA		*	*	*		*		
PC-OZ-Z	5970-543-1154		81349 INSULATION TAPE,ELECTRICAL... ADHESIVE,WHITE,GLASS FIBER, 0.5 IN.W,180 FT LG,0.007	ABC	FT		*	*	*		*		

(1) SMR CODE	(2) FEDERAL STOCK NUMBER	(3) DESCRIPTION REFERENCE NUMBER & MFR CODE			USABLE ON CODE	(4) UNIT OF MEAS	(5) QTY INC IN UNIT	(6) 30-DAY DS 'GS MAINT ALW (a) 1-20	(b) 21-50	(c) 51-100	(7) 1YR ALWPER 100 EQUIP CNTGCY	(8) DEPOT MAINT ALWPER 100 EQUIP	(9) ILLUSTRATION (a) FIG NO	(b) ITEM NO
		FUNCTIONAL GROUP - 60	BULK MATERIALS		CH-47									
				CONTINUED									BULK	
				IN.THK,1000 V,MIL-I-15126, TYPE GFT										
PA-OZ-Z	5970-631-1439	8034658-22	18876	INSULATION SLEEVING,..... ELECTRICAL-PLASTIC, FLEXIBLE,16 AWG,0.313 IN. ID,0.025 IN.WALL THK, MIL-I-7444,SIZE 5 COMP	ABC	FT		*	*	*		*		
R PA-OZ-Z	5999-661-0416	MS25274-2	96906	INSULATOR,END CAP COPPER..... ALLOY,ELECTRO-TIN PLATED FINISH,NYLON INSULATING SLEEVE,RED,0.055 IN.ID, 0.213 IN.OD,0.470 IN.LG,NO. 22-18 AWG WIRE SIZE	ABC	EA		*	*	*		*		
PB-FZ-Z	5970-811-9461		81349	INSULATION SLEEVING,..... ELECTRICAL-PLASTIC, FLEXIBLE,CLEAR,200 V,7/16 IN.WIRE SIZE,0.438 IN.ID, 0.022 IN.WALL THK, MIL-I-7444,TYPE 1,CLASS 1	ABC	FT		*	*	*		*		
PA-HZ-Z	5970-812-2108		81349	INSULATION SLEEVING,..... ELECTRICAL-PLASTIC, FLEXIBLE,BLACK,200 V,NO.13 AWG WIRE SIZE,0.076 IN.ID, 0.016 IN.WALL THK, MIL-I-7444,TYPE 3,CLASS 1 COMP	ABC	FT		*	*	*		*		
PA-OZ-Z	5970-818-6816	8034661-64	18876	INSULATION SLEEVING..... ELECTRICAL-PLASTIC, FLEXIBLE,NONSHRINKABLE, WHITE,200 V,3/4 IN.WIRE SIZE,3/4 IN.ID,0.030 IN. WALL THK,MIL-I-7444,TYPE 3, CLASS 1 COMP	ABC	FT		*	*	*		*		
PA-FZ-Z	5970-825-3678		81349	INSULATION SLEEVING,..... ELECTRICAL-GLASS FIBER, RUBBER COATED & IMPREGNATED,FLEXIBLE,WHITE, 8000 V,NO.14 AWG WIRE SIZE, 0.072 IN.ID,0.030 IN.WALL THK,MIL-I-18057,CLASS HA1	ABC	FT		*	*	*		*		
PB-FZ-Z	5970-837-0648	4-00124-009	03848	INSULATION SLEEVING..... ELECTRICAL-PLASTIC, FLEXIBLE,NONSHRINKABLE, NATURAL COLOR,17000 V,NO.8 AWG WIRE SIZE,0.129 IN.ID, 0.016 IN.WALL THK, MIL-I-22129 COMP	ABC	FT		*	*	*		*		
XB-OZ-Z		325011	00779	INSULATOR SLEEVING,ELECTRICAL PLASTIC,RIGID,BROWN,500 V,	ABC	EA								

(1) SMR CODE	(2) FEDERAL STOCK NUMBER	(3) DESCRIPTION REFERENCE NUMBER & MFR CODE		USABLE ON CODE CH-47	(4) UNIT OF MEAS	(5) QTY INC IN UNIT	(6) 30-DAY DS/GS MAINT ALW (a) 1-20	(b) 21-50	(c) 51-100	(7) 1-YR ALWPER 100 EQUIP CNTGCY	(8) DEPOT MAINT ALWPER 100 EQUIP	(9) ILLUSTRATION (a) FIG NO	(b) ITEM NO
		FUNCTIONAL GROUP - 60	BULK MATERIALS									BULK	
			CONTINUED 0.217 IN.ID,0.062 IN.WALL THK,0.750 IN.LG										
PA-FZ-Z	5970-935-0027		81349 INSULATION SLEEVING..... ELECTRICAL-PLASTIC, FLEXIBLE,NONSHRINKABLE, WHITE,700 V,1/4 IN.ID,0.020 IN.WALL THK,MIL-I-631,GRADE C,TYPE F,FORM U,SUBFORM UB, CLASS 1,CATEGORY 1	ABC	IN		*	*	*		*		
C PB-OZ-Z	5970-935-0098		81349 INSULATION TAPE,ELECTRICAL... FIBERGLASS,ADHESIVE,TEFLON COATING,1 IN.W,36 YD RL, 0.015 IN.THK,MIL-I-18746	ABC	FT		*	*	*		*		
N PB-OZ-Z	5970-964-8708	MS25227-3A	96906 INSULATOR,PLATE.....	ABC	EA		*	*	*		*		
PA-FZ-Z	5970-988-1581	8034658-1	18876 INSULATION SLEEVING..... ELECTRICAL-PLASTIC, FLEXIBLE,NONSHRINKABLE, CLEAR,TRANSPARENT,200 V, NO.20 AWG WIRE SIZE,0.034 IN.ID,0.016 IN.WALL THK, MIL-I-7444,TYPE 1,CLASS 1 COMP	ABC	FT		*	*	*		*		
PA-OZ-Z	5975-074-2072	MS17821-1-9	96906 STRAP,LINE SUPPORTING..... PLASTIC,0.190 IN.W,6.500 IN.LG,0.055 IN.THK	ABC	EA		*	*	*		*		
PA-OZ-Z	5975-231-5898	AN3056-6	88044 ADAPTER,ELECTRICAL CONDUIT... ALUMINUM ALLOY,3/4 IN.-20 NEF,FOR 3/8 IN.CONDUIT	ABC	EA		*	*	*		*		
XB-OZ-Z		AN3056-10	88044 ADAPTER,ELECTRICAL CONDUIT... ALUMINUM ALLOY,1 IN.-20 NEF,FOR 5/8 IN.CONDUIT	ABC	EA								
PA-OZ-Z	5975-240-4267	AN3056-3	88044 ADAPTER,ELECTRICAL CONDUIT... ALUMINUM ALLOY,1/2 IN.-28 NEF,FOR 3/16 IN.CONDUIT	ABC	EA		*	*	*		*		
PA-OZ-Z	5975-280-4313	AN3056-8	88044 ADAPTER,ELECTRICAL CONDUIT... ALUMINUM ALLOY,7/8 IN.-20 NEF,FOR 1/2 IN.CONDUIT	ABC	EA		*	*	*		*		
PB-OZ-Z	5975-553-7151	MS25171-2S	96906 CABLE,NIPPLE,ELECTRICAL..... RUBBER,0.560 IN.ID,2.500 IN.LG,FOR 0.31 IN.DIA CABLE	ABC	EA		*	*	*		*		
PA-FZ-Z	5975-984-6582	MS17821-1-0	96906 STRAP,LINE SUPPORTING..... NYLON,SELF-CLINCHING,BLACK, 6.500 IN.LG,FOR 1/16 IN.TO 1-3/4 IN.DIA BUNDLE	ABC	EA		*	*	*		*		
PA-OZ-Z	5985-504-7200	MS25056-1B	96906 SLEEVE,ANTENNA.....	ABC	EA		*	*	*		*		
PB-FZ-Z	5985-524-6789	MS25055-1B	96906 ELBOW,LEADTHROUGH.....	ABC	EA		*	*	*		*		
PB-FZ-Z	5999-067-8663	MS3193-16A	96906 CONTACT,ELECTRICAL-COPPER.... ALLOY,CRIMP SOCKET,	ABC	EA		*	*	*		*		

(1) SMR CODE	(2) FEDERAL STOCK NUMBER	(3) DESCRIPTION REFERENCE NUMBER & MFR CODE		USABLE ON CODE	(4) UNIT OF MEAS	(5) QTY INC IN UNIT	(6) 30-DAY DS/GS MAINT ALW (a) 1-20	(b) 21-50	(c) 51-100	(7) 1 YR ALWPER 100 EQUIP CNTGCY	(8) DEPOT MAINT ALWPER 100 EQUIP	(9) ILLUSTRATION (a) FIG NO	(b) ITEM NO
		FUNCTIONAL GROUP - 60 BULK MATERIALS		CH-47									
			CONTINUED										
			REMOVABLE,NO.16 CONTACT SIZE									BULK	
PB-FZ-Z	5999-078-6804	MS3193A20A	96906 CONTACT,ELECTRICAL-COPPER.... ALLOY,CRIMP SOCKET, REMOVABLE,NO.20 CONTACT SIZE	ABC	EA		*	*	*		*		
PA-OZ-Z	5999-729-1628	MS25274-3	96906 CAP,ELECTRICAL-COPPER,..... ELECTRO-TIN PLATED,NYLON INSULATING SLEEVE,BLUE,NO. 16-14 AWG WIRE SIZE,0.470 IN.LG	ABC	EA		*	*	*		*		
PB-FZ-Z	5999-892-8156	MS24255-16S	96906 CONTACT,ELECTRICAL-COPPER.... ALLOY,CRIMP SOCKET, REMOVABLE,NO.16 CONTACT SIZE	ABC	EA		*	*	*		*		
PB-FZ-Z	5999-901-3237	MS3192-16A	96906 CONTACT,ELECTRICAL-COPPER.... ALLOY,CRIMP PIN,REMOVABLE, NO.16 CONTACT SIZE	ABC	EA		*	*	*		*		
PB-FZ-Z	5999-901-3238	MS24254-16P	96906 CONTACT,ELECTRICAL-COPPER.... ALLOY,CRIMP PIN,REMOVABLE, NO.16 CONTACT SIZE	ABC	EA		*	*	*		*		
PA-OZ-Z	6110-126-3780	BACP10U0300AB	81205 PANEL ASSEMBLY.....	ABC	EA		*	*	*		*		
PA-OZ-Z	6145-161-0913	RG62AU	81349 CABLE,RADIO FREQUENCY..... COPPER,SINGLE BRAID,93 OHMS,NO.22 AWG,0.242 IN. DIA,W/SYNTHETIC RESIN JACKET	ABC	FT		*	*	*		*		
PA-FZ-Z	6145-191-1526	MS25191-4B	96906 WIRE,ELECTRICAL-ALUMINUM..... INSULATED,STRANDED,WHITE, 600 V,NO.4 AWG,0.340 IN.DIA	ABC	FT		*	*	*		*		
C PA-FZ-Z	6145-191-1529	ALG26624BXNB	90484 WIRE,ELECTRICAL-ALUMINUM..... INSULATED,STRANDED,WHITE, 600 V,NO.24 AWG,0.570 IN. DIA,	ABC	FT		*	*	*		*		
C PA-OZ-Z	6145-191-3224	MS25192B181	96906 CABLE,POWER,ELECTRICAL..... COPPER,STRANDED,1 CONDUCTOR,COPPER BRAIDED JACKET,NO.17 AWG.0.147 IN.DIA	ABC	FT		*	*	*		*		
C PA-OZ-Z	6145-236-9503	50-001-020	02470 WIRE,ELECTRICAL-COPPER..... NO.24 AWG,875.20 OHMS PER POUND RESISTIVITY	ABC	LB		*	*	*		*		
PA-OZ-Z	6145-284-0657	MS25190B8	96906 WIRE,ELECTRICAL-COPPER..... INSULATED,STRANDED,600 V, AN-8 WIRE SIZE,0.240 IN. DIA,MIL-W-5086,TYPE 2	ABC	FT		*	*	*		*		
PA-FZ-Z	6145-500-0189		81349 WIRE,ELECTRICAL-COPPER..... SILVER FINISH,INSULATION, STRANDED,600 V,NO.19 AWG,	ABC	FT		*	*	*		*		

(1) SMR CODE	(2) FEDERAL STOCK NUMBER	(3) DESCRIPTION — REFERENCE NUMBER & MFR CODE		USABLE ON CODE CH-47	(4) UNIT OF MEAS	(5) QTY INC IN UNIT	(6) 30-DAY DS/GS MAINT ALW (a) 1-20	(b) 21-50	(c) 51-100	(7) 1-YR ALW PER 100 EQUIP CNTGCY	(8) DEPOT MAINT ALW PER 100 EQUIP	(9) ILLUSTRATION (a) FIG NO	(b) ITEM NO
		FUNCTIONAL GROUP - 60 BULK MATERIALS										BULK	
			CONTINUED										
			0.095 IN.DIA,MIL-W-7139										
PA-OZ-Z	6145-542-6092	5403	05154 CABLE,RADIO FREQUENCY-COPPER, TINNED FINISH,INSULATED, STRANDED,COAXIAL TYPE,50 OHMS NOMINAL IMPEDANCE,28.5 UUF NOMINAL CAPACITANCE PER FT,1900 MAX RMS OPERATING VOLTAGE,0.195 IN.DIA, MIL-C-17,TYPE NO.RG-58C/U	ABC	FT		*	*	*		*		
PA-OZ-Z	6145-548-1237	MS25192B182	96906 CABLE,POWER,ELECTRICAL..... COPPER,TINNED FINISH, STRANDED,SHIELDED,2 CONDUCTORS,600 V,NO.18 AWG 0.269 IN.DIA	ABC	FT		*	*	*		*		
PA-OZ-Z	6145-578-6594	MS25190B6	96906 WIRE,ELECTRICAL-COPPER,..... INSULATED,STRANDED,600 V, AN-6 WIRE SIZE,0.293 IN. DIA,MIL-W-5086,TYPE 2	ABC	FT		*	*	*		*		
PA-OZ-Z	6145-578-6595	MS25190B4	96906 WIRE,ELECTRICAL-COPPER,..... INSULATED,STRANDED,600 V, AN-4 WIRE SIZE,0.355 IN. DIA,MIL-W-5086,TYPE 2	ABC	FT		*	*	*		*		
PA-OZ-Z	6145-578-6596	MS25190B2	96906 WIRE,ELECTRICAL-COPPER,..... INSULATED,STRANDED,600 V, AN-2 WIRE SIZE,0.425 IN. DIA,MIL-W-5086,TYPE 2	ABC	FT		*	*	*		*		
PB-FZ-Z	6145-578-6602	MS25190B18	96906 WIRE,ELECTRICAL-COPPER..... INSULATED,STRANDED,600 V, 0.095 IN.DIA,AN-18 WIRE SIZE,MIL-W-5086,TYPE 2 COMP	ABC	FT		*	*	*		*		
PB-FZ-Z	6145-578-6604	MS25190B14	96906 WIRE,ELECTRICAL-COPPER..... INSULATED,STRANDED,600 V, AN-14 WIRE SIZE 0.125 IN. DIA,MIL-W-5086,TYPE 2	ABC	FT		*	*	*		*		
PB-FZ-Z	6145-578-6605	MS25190B16	96906 WIRE,ELECTRICAL-COPPER,..... INSULATED,STRANDED,600 V, AN-16 WIRE SIZE,0.105 IN. DIA,MIL-W-5086,TYPE 2 COMP	ABC	FT		*	*	*		*		
PB-HZ-Z	6145-578-6606	MS25190B22	96906 WIRE,ELECTRICAL-COPPER,..... INSULATED,STRANDED,600 V, AN-22 WIRE SIZE,0.075 IN. DIA,MIL-W-5086,TYPE 2	ABC	FT		*	*	*		*		
PB-FZ-Z	6145-578-7513	MS25190B10	96906 WIRE,ELECTRICAL-COPPER,..... INSULATED,STRANDED,600 V, AN-10 WIRE SIZE,0.189 IN. DIA,MIL-W-5086,TYPE 2 COMP	ABC	FT		*	*	*		*		
PB-FZ-Z	6145-578-7514	MS25190B12	96906 WIRE,ELECTRICAL-COPPER.....	ABC	FT		*	*	*		*		

(1) SMR CODE	(2) FEDERAL STOCK NUMBER	(3) DESCRIPTION REFERENCE NUMBER & MFR CODE		USABLE ON CODE	(4) UNIT OF MEAS	(5) QTY INC IN UNIT	(6) 30-DAY DS/GS MAINT ALW (a) 1-20	(b) 21-50	(c) 51-100	(7) 1 YR ALWPER (ID EQUIP ENTRIES)	(8) DEPOT MAINT ALWPER (ID EQUIP)	(9) ILLUSTRATION (a) FIG NO	(b) ITEM NO
		FUNCTIONAL GROUP - 60	BULK MATERIALS	CH-47									
			CONTINUED									BULK	
PA-FZ-Z	6145-578-7517	MS25190A16	96906 WIRE,ELECTRICAL-COPPER,..... INSULATED,STRANDED,600 V, AN-12 WIRE SIZE,0.143 IN. DIA,MIL-W-5086,TYPE 2	ABC	FT		*	*	*		*		
PA-FZ-Z	6145-578-7519	MS25190A20	96906 WIRE,ELECTRICAL-COPPER,..... INSULATED,STRANDED,600 V, AN-16 WIRE SIZE,0.098 IN. DIA,MIL-W-5086,TYPE 1	ABC	FT		*	*	*		*		
PA-OZ-Z	6145-578-7520	MS25190A22	96906 WIRE,ELECTRICAL-COPPER..... INSULATED,STRANDED,600 V, AN-20 WIRE SIZE,0.078 IN. DIA,MIL-W-5086,TYPE 1	ABC	FT		*	*	*		*		
PA-FZ-Z	6145-578-7521	MS25190A12	96906 WIRE,ELECTRICAL-COPPER..... INSULATED,STRANDED,600 V, AN-22 WIRE SIZE,0.068 IN. DIA,MIL-W-5086,TYPE 1	ABC	FT		*	*	*		*		
PA-FZ-Z	6145-617-0858	MS25313A222	96906 WIRE,ELECTRICAL-COPPER,..... INSULATED,STRANDED,600 V, AN-12 WIRE SIZE,0.137 IN. DIA,MIL-W-5086,TYPE 1	ABC	FT		*	*	*		*		
PA-FZ-Z	6145-617-0859	MS25313A203	96906 CABLE,SPECIAL PURPOSE,..... ELECTRICAL-COPPER BRAID SHIELD,NYLON JACKET,2 CONDUCTORS,COPPER,TINNED FINISH,INSULATED,STRANDED, 600 V,AN 22 WIRE SIZE,0.227 IN.DIA	ABC	FT		*	*	*		*		
PA-OZ-Z	6145-635-3595	MS25192B223	96906 CABLE,SPECIAL PURPOSE,..... ELECTRICAL	ABC	FT		*	*	*		*		
PA-FZ-Z	6145-635-3624		81349 CABLE,POWER,ELECTRICAL-COPPER BRAID SHIELD,3 CONDUCTORS, COPPER,TINNED FINISH, INSULATED,STRANDED,600 V, AN22 WIRE SIZE,0.226 IN.DIA	ABC	FT		*	*	*		*		
PA-OZ-Z	6145-635-3626	MS25192B202	96906 CABLE,POWER,ELECTRICAL..... MIL-C-7078AAN22,TYPE 1	ABC	FT		*	*	*		*		
PA-FZ-Z	6145-643-0646		81349 WIRE,ELECTRICAL-COPPER,..... INSULATED,STRANDED,0.086 IN.DIA,1.000 V,NO.18 AWG, MIL-W-16878	ABC	FT		*	*	*		*		
PB-FZ-Z	6145-655-2562	MS25190C16	96906 WIRE,ELECTRICAL-COPPER..... INSULATED,STRANDED,600 V, 0.125 IN.DIA,NO.16 AWG COMP	ABC	FT		*	*	*		*		
PA-OZ-Z	6145-660-8711	RG213U	81349 CABLE,RADIO FREQUENCY.....	ABC	FT		*	*	*		*		

(1) SMR CODE	(2) FEDERAL STOCK NUMBER	(3) DESCRIPTION — REFERENCE NUMBER & MFR CODE		USABLE ON CODE CH-47	(4) UNIT OF MEAS	(5) QTY INC IN UNIT	(6) 30-DAY DS/GS MAINT ALW (a) 1-20	(b) 21-50	(c) 51-100	(7) 1-YR ALWPER 100 EQUIP CNTGCY	(8) DEPOT MAINT ALWPER 100 EQUIP	(9) ILLUSTRATION (a) FIG NO	(b) ITEM NO
		FUNCTIONAL GROUP - 60	BULK MATERIALS										
PA-OZ-Z	6145-661-0191	RG59BU	81349 CABLE,RADIO FREQUENCY-COPPER, SINGLE BRAID,75 OHMS,0.023 IN.WIRE DIA,0.242 IN.O/A DIA,W/SYNTHETIC RESIN JACKET	ABC	FT		*	*	*		*	BULK	
PA-FZ-Z	6145-681-7849	MILC17TYPERG223U	81349 CABLE,RADIO FREQUENCY..... COPPER,SILVER COATED, INSULATED,DOUBLE BRAID,NO. 19 AWG,0.216 IN.DIA, MIL-C-17,TYPE RG-223/U	ABC	FT		*	*	*		*		
PA-FZ-Z	6145-689-7447		81348 WIRE,ELECTRICAL-COPPER,TINNED FINISH,STRANDED, UNINSULATED,NO.12 AWG,FED QQ-W-343,TYPE RB,CLASS M COMP	ABC	FT		*	*	*		*		
PA-OZ-Z	6145-725-9360	RG114AU	81349 CABLE,RADIO FREQUENCY..... COPPER ALLOY,SINGLE BRAID, 185 OHMS,NO.33 AWG,0.405 IN.DIA,W/PLASTIC JACKET	ABC	FT		*	*	*		*		
PB-FZ-Z	6145-810-9301	MS25190C18	96906 WIRE,ELECTRICAL-COPPER..... INSULATED,STRANDED,600 V, 0.110 IN.DIA,NO.18 AWG COMP	ABC	FT		*	*	*		*		
PA-OZ-Z	6145-819-0058		81348 WIRE,ELECTRICAL-COPPER..... TINNED FINISH,STRANDED,NO. 12 AWG,FED QQ-W-343, TYPE RB,CLASS O COMP	ABC	LB		*	*	*		*		
PA-OZ-Z	6145-819-0061		81349 WIRE,ELECTRICAL-COPPER,TINNED FINISH,INSULATED,STRANDED, FLAME,MOISTURE,OIL & SOLVENT RESISTANT,GRAY, 600 V,NC.20 AWG,0.061 IN. DIA,MIL-W-16878	ABC	FT		*	*	*		*		
PB-HZ-Z	6145-845-5203	MS25192B201	96906 CABLE,SPECIAL PURPOSE..... ELECTRICAL-COPPER,STRANDED, 1 CONDUCTOR,COPPER BRAIDED JACKET,NO.19 AWG,0.129 IN. DIA	ABC	FT		*	*	*		*		
PB-FZ-Z	6145-851-8505	MS25190B20	96906 WIRE,ELECTRICAL-COPPER..... INSULATED,STRANDED,600 V, AN-20 WIRE SIZE,0.085 IN. DIA,MIL-W-5086 TYPE 2 COMP	ABC	FT		*	*	*		*		
PB-FZ-Z	6145-901-6840	MS25313A221	96906 CABLE,SPECIAL PURPOSE,..... ELECTRICAL-COPPER,TINNED FINISH,STRANDED,POLYVINYL CHLORIDE,NYLON JACKET, TINNED COPPER BRAID SHIELD, NYLON JACKET,600 V,NO. 21 AWG,1 CONDUCTOR,0.135	ABC	FT		*	*	*		*		

(1) SMR CODE	(2) FEDERAL STOCK NUMBER	(3) DESCRIPTION REFERENCE NUMBER & MFR CODE		USABLE ON CODE	(4) UNIT OF MEAS	(5) QTY INC IN UNIT	(6) 30-DAY DS/GS MAINT ALW A 1-20	B 21-50	C 51-100	(7) 1-YR ALWPER	(8) DEPOT MAINT	(9) ILLUSTRATION FIG NO	ITEM NO
		FUNCTIONAL GROUP - 60	BULK MATERIALS	CH-47									
			CONTINUED										
PA-FZ-Z	6145-901-6843	MS25313A201	IN.DIA 96906 CABLE,SPECIAL PURPOSE,..... ELECTRICAL	ABC	FT		*	*	*		*	BULK	
PA-FZ-Z	6145-917-6379	MS18001-20-9	96906 WIRE,ELECTRICAL.....	ABC	FT		*	*	*		*		
PA-OZ-Z	6145-931-2270	MS25192B203	96906 CABLE,SPECIAL PURPOSE..... COPPER,TINNED FINISH, STRANDED,SHIELDED,NO.20 AWG,600 V,3 CONDUCTORS, 0.247 IN.DIA	ABC	FT		*	*	*		*		
C XB-FZ-Z		MS25313A202	96906 CABLE,SPECIAL PURPOSE,..... ELECTRICAL-COPPER BRAID SHIELD,NYLON JACKET,2 CONDUCTORS,COPPER,TINNED FINISH,INSULATED,STRANDED, 600 V,AN20 WIRE SIZE,0.241 IN.DIA	ABC	FT								
PB-FZ-Z	6145-998-7609	EAB170	81996 WIRE KIT,STRANDED-1-25 FT LG. OF 7 BY 37/.005 IN TINNED COPPER WIRE,ROPE LAID TO 3/4 IN.TO 1/8 IN.PITCH, 1-10 FT LG OF 7 BY 75/.005 IN.TINNED COPPER WIRE,ROPE LAID TO 1-1/8 IN.TO 1-3/8 IN.PITCH,WIRE PER,FED QQ-W-343 COMP	ABC	EA		*	*	*		*		
PB-FZ-Z	6210-542-6393	MS25041-2	96906 LIGHT,INDICATOR-W/LENS,RED,.. CLEAR,SMOOTH BOTH SIDES, INCANDESCENT LAMP,MIDGET FLANGE BASE,MIL-L-7961A	ABC	EA		*	*	*		*		
PA-OZ-Z	6515-890-1803		81348 PLUNGER,LUER SYRINGE-USED FOR SPECTROMETRIC OIL ANALYSIS, FED GG-S-948	ABC	EA		*	*	*		*		
PA-OZ-Z	6640-901-5454		81348 TEST TUBE-USED FOR..... SPECTROMETRIC OIL ANALYSIS, FED NNN-T-189	ABC	EA		*	*	*		*		
PA-FZ-Z	7510-105-3090		81348 TAPE,PRESSURE SENSITIVE-3 IN. W,72 YD ROLL,0.003 IN.THK, FED L-T-100,TYPE 1	ABC	YD		*	*	*		*		
PA-FZ-Z	7510-105-3091		81348 TAPE,PRESSURE ADHESIVE..... FED L-T-100,TYPE 1,72 YD	ABC	YD		*	*	*		*		
PA-FZ-Z	7510-105-3092		81348 TAPE,PRESSURE ADHESIVE-1/2... IN.W,72 YD ROLL,0.003 IN. THK,FED L-T-100,TYPE 1	ABC	YD		*	*	*		*		
PA-FZ-Z	7510-144-9673	428A4-001NWD60YDRL	76381 TAPE,PRESSURE SENSITIVE..... ADHESIVE-ALUMINUM-BACKED, FED L-T-80	ABC	YD		*	*	*		*		
PA-FZ-Z	7510-144-9674	428A3-001NWD60YDRL	76381 TAPE,PRESSURE SESITIVE..... ADHESIVE-ALUMINUM-BACKED, FED L-T-80	ABC	YD		*	*	*		*		
PA-FZ-Z	7510-144-9675	428A2-001NWD60YDRL	76381 TAPE,PRESSURE SENSITIVE.....	ABC	YD		*	*	*		*		

(1) SMR CODE	(2) FEDERAL STOCK NUMBER	(3) DESCRIPTION REFERENCE NUMBER & MFR CODE		USABLE ON CODE CH-47	(4) UNIT OF MEAS	(5) QTY INC IN UNIT	(6) 30-DAY DS/GS MAINT ALW (a) 1-20	(b) 21-50	(c) 51-100	(7) 1-YR ALWPER 100 EQUIP CNTGCY	(8) DEPOT MAINT ALWPER 100 EQUIP	(9) ILLUSTRATION (a) FIG NO	(b) ITEM NO
		FUNCTIONAL GROUP - 60	BULK MATERIALS									BULK	
			CONTINUED ADHESIVE-ALUMINUM-BACKED, FED L-T-80										
PA-FZ-Z	7510-144-9688	428A1-00INWD60YDRL	76381 TAPE,PRESSURE SENSITIVE..... ADHESIVE-ALUMINUM FOIL BACKING,ALUMINUM COLOR,1 IN.W,3 IN.ID CORE,60 YD LG, FOR USE ON ACFT SKINS TO CHECK FATIQUE CRACKS	ABC	YD		*	*	*		*		
PA-DZ-Z	7510-161-4279	921072	62983 FASTENER,PAPER-STEEL,0.485... IN.HD DIA,2-1/8 IN.LG	ABC	EA		*	*	*		*		
PC-OZ-Z	7510-266-6712	8783476	19203 TAPE,PRESSURE SENSITIVE..... ADHESIVE-PAPER BACKING, OPAQUE,WATER RESISTANT, 1 IN.W,60 YD LG,3 IN.CORE ID,FED UU-T-106,TUBE 1	ABC	YD		*	*	*		*		
PC-OZ-Z	7510-515-0319		81349 TAPE,PRESSURE SENSITIVE..... ADHESIVE-GLASS CLOTH BACKING,OPAQUE,CORROSION RESISTANT,NATURAL COLOR,2 IN.W,3 IN.ID CORE,FOR BINDING JOINTS IN LOW PRESSURE HOT AIR DUCTS WHERE THE TEMPERATURE DOES NOT EXCEED 350 DEG F MIL-T-4053,60 YD ROLL	ABC	YD		*	*	*		*		
PC-OZ-Z	7510-550-7125		81348 TAPE,PRESSURE SENSITIVE..... ADHESIVE-CELLOPHANE BACKING,OPAQUE,YELLOW,1/2 IN.W,72 YD LG,3 IN.ID CORE, FOR NONPERMANENT APPLICATIONS,FED L-T-90, TYPE 1,CLASS B	ABC	YD		*	*	*		*		
PC-OZ-Z	7510-550-7126	MS16698-18	96906 TAPE,PRESSURE SENSITIVE..... ADHESIVE-CELLOPHANE BACKING,OPAQUE,RED,1/2 IN. W,72 YD LG,3 IN.ID CORE,FOR NONPERMANENT APPLICATIONS, FED L-T-90,TYPE 1,CLASS B	ABC	YD		*	*	*		*		
PC-OZ-Z	7510-550-7127		81348 TAPE,PRESSURE SENSITIVE..... ADHESIVE-CELOPHANE BACKING, OPAQUE,WHITE,1/2 IN.W,72 YD LG,3 IN.ID CORE,FOR NONPERMANENT APPLICATIONS, FED L-T-90,TYPE 1,CLASS B	ABC	YD		*	*	*		*		
PC-OZ-Z	7510-550-7129		81348 TAPE,PRESSURE SENSITIVE..... ADHESIVE-CELLOPHANE BACKING,OPAQUE,MEDIUM GREEN,1/2 IN.W,72 YD LG, 3 IN.ID CORE,FOR	ABC	YD		*	*	*		*		

(1) SMR CODE	(2) FEDERAL STOCK NUMBER	(3) DESCRIPTION REFERENCE NUMBER & MFR CODE		USABLE ON CODE	(4) UNIT OF MEAS	(5) QTY INC IN UNIT	(6) 30-DAY DS/GS MAINT ALW a: 1 - 20	b: 21 - 50	c: 51 - 100	(7) 1-YR ALWPER 1X EQUIP CNTGCY	(8) DEPOT MAINT ALWPER 1X EQUIP	(9) ILLUSTRATION a: FIG NO	b: ITEM NO
		FUNCTIONAL GROUP - 60	BULK MATERIALS	CH-47									
			CONTINUED									BULK	
			NONPERMANENT APPLICATIONS, FED L-T-90,TYPE 1,CLASS B										
PA-OZ-Z	7510-634-3264		81348 TAPE,PRESSURE SENSITIVE..... ADHESIVE-CELLOPHANE BACKING,OPAQUE,RED,1/4 IN. W,3 IN.ID CORE,72 YD LG,FOR NONPERMANENT APPLICATIONS, FED L-T-90 TYPE 1,CLASS B	ABC	YD		*	*	*		*		
PC-OZ-Z	7510-634-3267		81348 TAPE,PRESSURE SENSITIVE..... ADHESIVE-CELLOPHANE BACKING,OPAQUE,LIGHT BLUE, 1/2 IN.W,72 YD LG,3 IN.ID CORE,FOR NONPERMANENT APPLICATIONS,FED L-T-90, TYPE 1,CLASS B	ABC	YD		*	*	*		*		
PC-FZ-Z	7510-663-0196		81348 TAPE,PRESSURE SENSITIVE..... ADHESIVE-FILM BACKING, OPAQUE,OLIVE DRAB,2 IN.W,3 IN.ID CORE,FED PPP-T-60, TYPE 3,CLASS 1,60 YD ROLL	ABC	YD		*	*	*		*		
PC-OZ-Z	7510-720-7516		81348 TAPE,PRESSURE SENSITIVE..... ADHESIVE-ALUMINUM FOIL BACKING,OPAQUE,ALUMINUM COLOR,1 IN.W,3 IN.CORE ID, USED FOR SEALING & MASKING, FED.L-T-80,60 YD	ABC	YD		*	*	*		*		
PB-OZ-Z	7510-778-1597	STH5019-3-8	08075 STAPLES,CHISEL POINT-STEEL,.. 0.050 IN.W,0.019 IN.THK,STH 13/32 IN.CROWN,3/8 IN.LEG LG	ABC	EA		*	*	*		*		
PA-FZ-Z	7510-816-1020		81348 TAPE,PRESSURE,SENSITIVE-FED.. L-T-100,TYPE 2-003	ABC	YD		*	*	*		*		
PC-OZ-Z	7510-826-1876	158-9	11244 TAPE,EMBOSSING-PLASTIC,..... W/PRESSURE SENSITIVE ADHESIVE BACKING,BLACK, GLOSSY,1/2 IN.W,12 FT LG, 10 RL PER BOX FED UU-T-94, CLASS 2	ABC	EA		*	*	*		*		
PC-FZ-Z	7510-846-8674		81348 TAPE,PRESSURE SENSITIVE..... FED L-T-100,TYPE 1	ABC	YD		*	*	*		*		
PA-OZ-Z	7510-889-3494	046850	80049 BINDER,LOOSE-LEAF-VIRGIN..... VINYL PLASTIC FLEXIBLE COVER,7 IN.W,9-1/2 IN.LG, MIL-B-43064	ABC	EA		*	*	*		*		
PB-FZ-Z	7510-995-4893		81348 TAPE,EMBOSSING-BLACK,FED..... UU-T-94,CLASS 2,0.375 IN.W, 12 FT	ABC	FT		*	*	*		*		
PA-HZ-Z	7690-112-8981	MS9244-01	96906 MARKER,IDENTIFICATION-WHITE.. CENTER,W/RED SPECULAR	ABC	EA		*	*	*		*		

(1) SMR CODE	(2) FEDERAL STOCK NUMBER	(3) DESCRIPTION REFERENCE NUMBER & MFR CODE		USABLE ON CODE CH-47	(4) UNIT OF MEAS	(5) QTY INC IN UNIT	(6) 30-DAY DS/GS MAINT ALW (a) 1-20	(b) 21-50	(c) 51-100	(7) 1-YR ALWPER 100 EQUIP CNTGCY	(8) DEPOT MAINT ALWPER 100 EQUIP	(9) ILLUSTRATION (a) FIG NO	(b) ITEM NO
		FUNCTIONAL GROUP - 60 BULK MATERIALS										BULK	
			CONTINUED BORDER,WHITE LETTERS INSCRIBED ON BORDER-RUBBER ASSEMBLY DATE,1/2 IN.W,1 IN.LG										
PA-OZ-Z	7690-180-6093	MS87033J4	96906 TAPE,EMBOSSING-YELLOW,..... INSCRIBED-LUBRICATION RETURN,1 IN.W,1 IN.ID CORE, 50 FT ROLL	ABC	FT		*	*	*		*		
PA-OZ-Z	7690-180-6095	MS87033G38	96906 MARKER,IDENTIFICATION-BLUE &. YELLOW,INSCRIBED-HYDRAULIC RAMP DOWN,1 IN.W,1 IN.ID CORE,50 FT ROLL	ABC	FT		*	*	*		*		
PA-OZ-Z	7690-180-6096	MS16837-261	96906 MARKER,IDENTIFICATION..... CELLULOSE ACETATE,BLUE & YELLOW,INSCRIBED-HYDRAULIC PRIMARY PUMP PRESS,1 IN.ID CORE,66 FT ROLL	ABC	FT		*	*	*		*		
PA-OZ-Z	7690-180-6102	MS87033L9	96906 TAPE,EMBOSSING-WHITE,..... INSCRIBED-RELIEF TUBE,1 IN. W,1 IN.ID CORE,50 FT ROLL	ABC	FT		*	*	*		*		
PA-OZ-Z	7690-180-6129	MS87033H2	96906 MARKER,IDENTIFICATION-GRAY &. ORANGE,INSCRIBED-INSTRUMENT AIR DRAIN,1 IN.W,1 IN.ID CORE,50 FT ROLL	ABC	FT		*	*	*		*		
PA-OZ-Z	7690-180-6132	MS87033J5	96906 MARKER,IDENTIFICATION-YELLOW, INSCRIBED-LUBRICATION SUPPLY,1 IN.W,1 IN.ID CORE, 50 FT ROLL	ABC	FT		*	*	*		*		
PA-OZ-Z	7690-400-7986	MS87033F2	96906 TAPE,EMBOSSING-RED,..... INSCRIBED-FUEL DRAIN,1 IN. W,1 IN.ID CORE,50 FT ROLL	ABC	FT		*	*	*		*		
PA-OZ-Z	7690-400-7991	MS87033H5	96906 MARKER,IDENTIFICATION-GRAY... & ORANGE,INSCRIBED INSTRUMENT AIR PILOT PRESSURE,1 IN.W,1 IN.ID CORE,50 FT ROLL	ABC	FT		*	*	*		*		
PA-OZ-Z	7690-400-7995	MS87033F8	96906 MARKER,IDENTIFICATION-RED,... INSCRIBED-FUEL VENT,1 IN.W, 1 IN.ID CORE,50 FT ROLL	ABC	FT		*	*	*		*		
PA-OZ-Z	7690-400-7996	MS87033F4	96906 TAPE,EMBOSSING-RED.,..... INSCRIBED-FUEL PRESSURE,1 IN.W,1 IN.ID CORE,50 FT ROLL	ABC	FT		*	*	*		*		
PA-OZ-Z	7690-401-1689	MS87033G54	96906 MARKER,IDENTIFICATION-BLUE &. YELLOW,INSCRIBED-HYDRAULIC WHEEL BRAKE LEFT HAND,1 IN. W,1 IN.ID CORE,50 FT ROLL	ABC	FT		*	*	*		*		
PA-OZ-Z	7690-401-1695	MS87033G39	96906 MARKER,IDENTIFICATION-BLUE &. YELLOW,INSCRIBED-HYDRAULIC	ABC	FT		*	*	*		*		

(1) SMR CODE	(2) FEDERAL STOCK NUMBER	(3) DESCRIPTION REFERENCE NUMBER & MFR CODE		USABLE ON CODE	(4) UNIT OF MEAS	(5) QTY INC IN UNIT	(6) 30-DAY DS/GS MAINT ALW (a) 1-20	(b) 21-50	(c) 51-100	(7) 1-YR ALWPER 100 EQUIP CNTGCY	(8) DEPOT MAINT ALWPER 100 EQUIP	(9) ILLUSTRATION (a) FIG NO	(b) ITEM NO
		FUNCTIONAL GROUP - 60 BULK MATERIALS		CH-47									
					CONTINUED								
					RAMP PRESSURE,1 IN.W,1 IN. ID CORE,50 FT ROLL							BULK	
PA-OZ-Z	7690-401-4686	MS87033B1	96906	ABC	MARKER,IDENTIFICATION-GREEN,. INSCRIBED-BREATHING OXYGEN, 1 IN.W,1 IN.ID CORE,50 FT ROLL	FT		*	*	*		*		
PA-OZ-Z	7690-401-4694	MS87033G55	96906	ABC	TAPE,EMBOSSING-BLUE &..... YELLOW,INSCRIBED-HYDRAULIC WHEEL BRAKE RIGHT HAND,1 IN.W,1 IN.ID CORE, 50 FT ROLL	FT		*	*	*		*		
N PA-OZ-Z	7690-440-0046	MS87033D1	96906	ABC	MARKER,IDENTIFICATION-BROWN.. & ORANGE,INSCRIBED-ELECTRICAL CONDUIT,1 IN.W, 1 IN.ID CORE,50 FT ROLL	FT		*	*	*		*		
XB-OZ-Z		MS16837-387	96906	ABC	MARKER,IDENTIFICATION..... CELLULOSE ACETATE,YELLOW, INSCRIBED-LUBRICATION DRAIN,1 IN.ID CORE,66 FT	EA								
PA-OZ-Z	7690-582-0635	MS16837-406	96906	ABC	MARKER,IDENTIFICATION..... CELLULOSE ACETATE,WHITE, INSCRIBED-CABIN HEAT,1 IN. ID CORE,66 FT	FT		*	*	*		*		
XB-OZ-Z		MS16837-100	96906	ABC	MARKER,IDENTIFICATION..... CELLULOSE ACETATE,BLUE & INSCRIBED-FIRE PROTECTION FIRE EXTINGUISHER,1 IN.ID CORE,66 FT	FT								
XB-OZ-Z		MS16837-112	96906	ABC	MARKER,IDENTIFICATION..... CELLULOSE ACETATE,RED, INSCRIBED-FUEL TRANSFER, 1 IN.ID CORE,66 FT	FT								
PA-OZ-Z	7690-753-4727		81349	ABC	MARKER,IDENTIFICATION..... PLASTIC,W/ADHESIVE,BLUE & YELLOW,INSCRIBED HYDRAULIC,1 IN.W,3 IN.ID CORE,MIL-T-9906,50 YD	YD		*	*	*		*		
PA-OZ-Z	7690-753-4741		81349	ABC	MARKER,IDENTIFICATION..... PLASTIC,W/ADHESIVE,YELLOW, INSCRIBED-LUBRICATION, 1 IN.W,3 IN.ID CORE, MIL-T-9906,50 YD	YD		*	*	*		*		
PA-OZ-Z	7690-753-4742		81349	ABC	MARKER,IDENTIFICATION..... PLASTIC,W/ADHESIVE,GRAY & ORANGE,INSCRIBED INSTRUMENT AIR,1 IN.W, 3 IN.ID CORE,MIL-T-9906, 50 YD	YD		*	*	*		*		
R PC-OZ-Z	7510-514-0981	473	76381	ABC	TAPE,PRESSURE SENSITIVE.....	YD		*	*	*		*		

	(1) SMR CODE	(2) FEDERAL STOCK NUMBER	(3) DESCRIPTION REFERENCE NUMBER & MFR CODE		USABLE ON CODE CH-47	(4) UNIT OF MEAS	(5) QTY INC IN UNIT	(6) 30-DAY DS/GS MAINT ALW (a) 1-20	(b) 21-50	(c) 51-100	(7) 1-YR ALWPER 100 EQUIP CNTGCY	(8) DEPOT MAINT ALWPER 100 EQUIP	(9) ILLUSTRATION (a) FIG NO	(b) ITEM NO
			FUNCTIONAL GROUP - 60 BULK MATERIALS										BULK	
					CONTINUED									
					ADHESIVE-PLASTIC BACKING, CLEAR, TRANSPARENT, OIL & WATER RESISTANT, 1 IN.W, 1 IN.CORE ID, 36 YD LG									
N	PA-FC-Z	8030-629-1444	EC1130EC1063	76381	SEALING COMPOUND.....	ABC	KT		*	*	*		*		
	PC-FZ-Z	8030-754-2408	425	76381	TAPE, PRESSURE SENSITIVE.....	ABC	YD		*	*	*		*		
					ADHESIVE-ALUMINUM FOIL BACKING, OPAQUE, ALUMINUM COLOR, 1/4 IN.W, 1 IN.CORE ID, 60 YD ROLL, FED L-T-80, USED FOR SEALING & MASKING									
N	PB-HZ-Z	8030-860-9771	HYSOL3478	04347	COMPOUND, HARDENER.....	ABC	KT		*	*	*		*		
N	PC-OZ-Z	8030-779-4700	EC1252	04963	SEALING COMPOUND.....	ABC	OZ		*	*	*		*		
	PC-HZ-Z	8030-889-3535	11072502	18876	TAPE, ANTISEIZING.....	ABC	EA		*	*	*		*		
					TETRAFLUOROETHYLENE, 1/2 IN. W, 0.004 IN.THK, FOR USE IN OXYGEN SYSTEM, MIL-T-27730, SIZE 2									
	PA-OZ-Z	8105-290-0340		81348	SACK, SHIPPING-SPECTROMETRIC..	ABC	EA		*	*	*		*		
					OIL ANALYSIS FOR ALL ARMY AIRCRAFT, FED PPP-S-30, TYPE 1-10LG6W									
	PA-OZ-Z	8125-933-4414	PW4005	73866	BOTTLE, COLORED-GLASS, WHITE...	ABC	EA		*	*	*		*		
					CAP, 5 DRAM, SPECTROMETRIC OIL ANALYSIS FOR ALL ARMY AIRCRAFT									
	PA-FZ-Z	8135-183-8814		81348	CUSHIONING MATERIAL,.....	ABC	FT		*	*	*		*		
					PACKING-CELLULOSE WADDING, WATER RESISTANT, LOW ABSORBENCY, 40 IN.W, 165 FT LG, 0.370 IN.THK, FED PPP-C-843, TYPE 2, CLASS B									
	PA-FZ-Z	8135-224-8885		81349	BARRIER MATERIAL,.....	ABC	YD		*	*	*		*		
					GREASEPROOFED-WATERPROOFED, FLEXIBLE-SMOOTH, W/O TRANSFERABLE COATING ON GREASEPROOF SIDE, RED, MEDIUM TYPE DUTY, 36 IN.W, 200 YD LG, MIL-B-121, GRADE A, TYPE 2, CLASS 1									
	PC-FZ-Z	8135-551-1245		81348	TAPE, PRESSURE SENSITIVE.....	ABC	YD		*	*	*		*		
					ADHESIVE-WATERPROOF, OPAQUE, OLIVE DRAB, 4 IN.W, 3 IN.CORE ID, 60 YD LG, FOR EXTERIOR PACKAGING, FED PPP-T-60, CLASS 1									
	PC-OZ-Z	8135-579-9284		81348	CELLOPHANE-UNCOATED, 18 IN....	ABC	OZ		*	*	*		*		
					W, 0.008 IN.THK, FED									

(1) SMR CODE	(2) FEDERAL STOCK NUMBER	(3) DESCRIPTION REFERENCE NUMBER & MFR CODE			USABLE ON CODE	(4) UNIT OF MEAS	(5) QTY INC IN UNIT	(6) 30-DAY DS/GS MAINT ALW (a) 1-20	(b) 21-50	(c) 51-100	(7) 1-YR ALWPER 100 EQUIP CNTGCY	(8) DEPOT MAINT ALWPER 100 EQUIP	(9) ILLUSTRATION (a) FIG NO	(b) ITEM NO
		FUNCTIONAL GROUP - 60	BULK MATERIALS		CH-47									
				CONTINUED L-C-00110,TYPE 1,100 FT ROLL									BULK	
PB-OZ-Z	8135-618-1783	LP378AMIL6-100-16	81348	PLASTIC SHEET.....	ABC	FT		*	*	*		*		
PC-OZ-Z	8135-634-2946	471-1INCH	76381	TAPE,PRESSURE SENSITIVE..... ADHESIVE-VINYL ACETATE SHEET BACKING,OPAQUE,BLACK, 1 IN.W,3 IN.CORE ID,36 YD LG,FED PPP-T-66,TYPE 1, CLASS 2	ABC	YD		*	*	*		*		
PA-FZ-Z	8135-753-4661		81349	BARRIER MATERIAL..... GREASEPROOFED-WATERPROOFED, FLEXIBLE-CREPED,W/O TRANSFERABLE COATING ON GREASEPROOF SIDE,HEAVY DUTY TYPE,RED,36 IN.W,100 YD RL, MIL-B-121,TYPE 1,GRADE A, CLASS 2	ABC	YD		*	*	*		*		
PA-OZ-Z	8305-051-2163		81349	WEBBING,TEXTILE-HERRINGBONE.. TWILL WEAVE,90 TO 110 YD LG,0.070 TO 0.100 IN.THK, MIL-W-4088 TYPE 14	ABC	FT		*	*	*		*		
PA-FZ-Z	8305-178-6825	STYLEEP15-0-0073X46X400YD	32617	CLOTH,KNITTED-NATURAL COLOR.. 46 IN.W	ABC	YD		*	*	*		*		
PA-OZ-Z	8305-191-3977		81349	CLOTH,AIRPLANE,COTTON..... UNSHRUNK,MERCERIZED,NATURAL COLOR,36 IN.W,MIL-C-5646	ABC	FT		*	*	*		*		
PA-OZ-Z	8305-227-1247		81348	FELT SHEET-WOOL,NONWOVEN..... GRAY,MILDEW & MOISTURE RESISTANT,72 IN.W,1/4 IN. THK,FED C-F-206,TYPE 1, CLASSIFICATION 12R2	ABC	SF		*	*	*		*		
PA-OZ-Z	8305-256-3902		81348	CLOTH,DUCK,COTTON..... 3-PLY WARP & 2-PLY FILLING, OLIVE DRAB,60 IN.W, FED CCC-C-419,TYPE 3	ABC	FT		*	*	*		*		
PA-OZ-Z	8305-260-6909		81349	WEBBING,TEXTILE-NYLON,SINGLE. HERRINGBONE TWILL WEAVE, OLIVE DRAB,9/16 IN.W,500 LB BREAKING STRENGTH, MIL-W-4088,TYPE 1	ABC	FT		*	*	*		*		
PA-FZ-Z	8305-261-8856		81349	WEBBING,TEXTILE-NYLON,SINGLE. HERRINGBONE TWILL WEAVE, GREEN,ABRASION RESISTANT, 9/16 IN.W,500 LB.BREAKING STRENGTH,MIL-W-4088,TYPE 1 COMP	ABC	FT		*	*	*		*		
PA-OZ-Z	8305-267-3015		81348	CLOTH,CHEESECLOTH-COTTON..... WHITE,UNSHRUNK,36 IN.W,FED CCC-C-440,TYPE 2,CLASS 2	ABC	FT		*	*	*		*		
PA-FZ-Z	8305-443-5601	1562-38IN	88730	SCRIM,CLOTH.....	ABC	FT		*	*	*		*		

(1) SMR CODE	(2) FEDERAL STOCK NUMBER	(3) DESCRIPTION. REFERENCE NUMBER & MFR CODE		USABLE ON CODE CH-47	(4) UNIT OF MEAS	(5) QTY INC IN UNIT	(6) 30-DAY DS/GS MAINT ALW (a) 1-20	(b) 21-50	(c) 51-100	(7) 1-YR ALWPER 100 EQUIP CNTGCY	(8) DEPOT MAINT ALWPER 100 EQUIP	(9) ILLUSTRATION (a) FIG NO	(b) ITEM NO
		FUNCTIONAL GROUP - 60 BULK MATERIALS										BULK	
				CONTINUED									
		HG32-C05X38IN.X500YD											
PA-OZ-Z	8305-514-4263		81349	CLOTH,COATED-GLASS,PLAIN..... WEAVE,VINYL RESIN COATED BOTH SIDES,GRAY,ABRASION, AROMATIC HYDROCARBON FLUID & FIRE RESISTANT, WATERPROOF,52 IN.W, MIL-C-7514,TYPE 1	ABC	FT		*	*	*		*		
PA-FZ-Z	8305-530-0109		81349	CLOTH,GLASS-SATIN WEAVE,..... CONTINUOUS FILAMENT WARP & FILLING YARN,NATURAL COLOR, COUPLING TREATMENT,38 IN.W, MIL-C-9084	ABC	FT		*	*	*		*		
PA-FZ-Z	8305-753-2967	CCCF46CL2-36-50YD	81348	CLOTH,NONWOVEN.....	ABC	YD		*	*	*		*		
PA-FZ-Z	8305-926-1584		81349	CLOTH,LAMINATED-NYLON MESH,.. 1-PLY,VINYL CHLORIDE FILM, GRAY,2-PLY,FIRE RESISTANT TREATED,WATERPROOF & WEATHER RESISTANT,50 IN.W, MIL-C-43006,TYPE 1,CLASS 2	ABC	FT		*	*	*		*		
PA-DZ-Z	8305-926-1585		81349	CLOTH,LAMINATED-NYLON MESH,.. 1-PLY,VINLY,CHLORIDE FILM, 2-PLY,FIRE & WEATHER RESISTANT,WATERPROOF,GREEN, 50 IN.W,MIL-C-43006,TYPE 1, CLASS 2	ABC	FT						*		
PC-OZ-Z	8305-926-6869		81349	CLOTH,DUCK-NYLON,SINGLE OR 2. PLY WARP & FILLING,OLIVE GREEN,WATER RESISTANT,40 IN.W,MIL-C-7219,TYPE 3	ABC	FT		*	*	*		*		
PA-FZ-Z	8310-187-3920		81348	THREAD,COTTON-3 PLIES,SOFT... FINISH,OLIVE DRAB, SPECIFICALLY DESIGNED FOR SEWING MACHINE,6000 YD, FED V-T-276 TYPE IA3	ABC	YD		*	*	*		*		
PA-FZ-Z	8310-262-2772		81348	THREAD,NYLON-SOFT FINISH,..... Z-TWIST,OLIVE DRAB,3 PLIES, 2800 YD,FED V-T-295, TYPE 1,CLASS 1	ABC	YD		*	*	*		*		
PA-OZ-Z	8315-901-9716		81349	FASTENER,TAPE PILE-NYLON..... WARP/FILLING,SLATE GRAY, 3/4 IN.W,TYPE 2,MIL-F-21840	ABC	FT		*	*	*		*		
PA-OZ-Z	8315-901-9717		81349	FASTENER TAPE,HOOK-NYLON,..... GRAY,3/4 IN.W,MIL-F-21840, TYPE 2	ABC	FT		*	*	*		*		
PA-OZ-Z	8315-926-1612		81349	FASTENER TAPE,HOOK-NYLON,..... SLATE GRAY,1 IN.W, MIL-F-21840,TYPE 2	ABC	FT		*	*	*		*		
PA-OZ-Z	8315-935-0505		81349	FASTENER TAPE,PILE-NYLON.....	ABC	FT		*	*	*		*		

(1) SMR CODE	(2) FEDERAL STOCK NUMBER	(3) DESCRIPTION REFERENCE NUMBER & MFR CODE		USABLE ON CODE	(4) UNIT OF MEAS	(5) QTY INC IN UNIT	(6) 30-DAY DS GS MAINT ALW (a) 1-20	(b) 21-50	(c) 51-100	(7) 1-YR ALW PER 100 EQUIP CNTGCY	(8) DEPOT MAINT ALW PER 100 EQUIP	(9) ILLUSTRATION (a) FIG NO	(b) ITEM NO
		FUNCTIONAL GROUP - 60	BULK MATERIALS	CH-47									
			CONTINUED									BULK	
			SLATE GRAY,1 IN.W, MIL-F-21840,TYPE 2										
PA-FZ-Z	8315-935-6721		81349 FASTENER TAPE,HOOK..... MIL-F-21840,TYPE 2,GRADE 2, 25 YD ROLL	ABC	FT		*	*	*		*		
PA-FZ-Z	8315-935-6722		81349 FASTENER TAPE,HOOK..... MIL-F-21840,TYPE 2,GRADE 2,25 YD ROLL	ABC	FT		*	*	*		*		
PA-FZ-Z	8315-935-6723		81349 FASTENER TAPE,PILE-NYLON..... LIGHT GRAY,5/8 IN.W, MIL-F-21840,TYPE 2	ABC	FT		*	*	*		*		
PA-FZ-Z	8315-935-6724		81349 FASTENER TAPE,HOOK-NYLON..... LIGHT GRAY,2 IN.W, MIL-F-21840,TYPE 2	ABC	FT		*	*	*		*		
PC-FZ-Z	9320-019-0351	EC1202-032THK8750WD200FTLG	TAPE,ADHESIVE,RUBBER..... 76381 SYNTHETIC,MOISTURE PROOF, BLACK,7/8 IN.W,1/32 IN.THK, 200 FT LG	ABC	FT		*	*	*		*		
PC-FZ-Z	9320-057-9820		81349 RUBBER SHEET,SOLID-SYNTHETIC, SMOOTH,BOTH SIDES,OIL, OZONE & WEATHER RESISTANT, 36 IN.W,36 IN.LG,0.062 IN. THK,MIL-S-6855,CLASS 2, GRADE 40	ABC	EA		*	*	*		*		
PA-FZ-Z	9320-069-5175	AMS3195-125	81343 RUBBER SHEET,CELLULAR..... SYNTHETIC,CURED,BOTH SIDES SMOOTH,MEDIUM GRADE, UNEXPLODED CELL TYPE STRUCTURE,36 IN.W,36 IN.LG, 0.125 IN.THK	ABC	EA		*	*	*		*		
PA-FZ-Z	9320-069-5177		81343 RUBBER SHEET,CELLULAR..... SYNTHETIC,CURED,MEDUIM GRADE,UNEXPLODED CELL STRUCTURE,SMOOTH FINISH, BOTH SIDES,36 IN.W,36 IN. LG,1/2 IN.THK,AMS3195	ABC	EA		*	*	*		*		
C PC-OZ-Z	9320-880-4520	AMS3195	81343 RUBBER STRIP-SYNTHETIC,..... CELLULAR,UNEXPLODED CELL STRUCTURE,SMOOTH FINISH, BOTH SIDES,MEDIUM GRADE,3/4 IN.W,120 IN.LG,0.063 IN.THK	ABC	EA		*	*	*		*		
C PB-FZ-Z	9320-122-5447		81349 RUBBER STRIP-BOTH SIDES..... SMOOTH,OIL,OZONE & WEATHER RESISTANT,1/2 IN.OD,0.063 IN.WALL THK,MIL-S-6855, CLASS 2,GRADE 40	ABC	IN		*	*	*		*		
PA-FZ-Z	9320-143-6851	AMS3346-063X36X36	81343 RUBBER SHEET,SOLID-BOTH SIDES SMOOTH,OIL,TEAR,LOW & HIGH TEMP RESISTANT,36 IN.W,36	ABC	EA		*	*	*		*		

(1) SMR CODE	(2) FEDERAL STOCK NUMBER	(3) DESCRIPTION REFERENCE NUMBER & MFR CODE		USABLE ON CODE	(4) UNIT OF MEAS	(5) QTY INC IN UNIT	(6) 30-DAY DS/GS MAINT ALW (a) 1-20	(b) 21-50	(c) 51-100	(7) 1-YR ALWPER 100 EQUIP CNTGCY	(8) DEPOT MAINT ALWPER 100 EQUIP	(9) ILLUSTRATION (a) FIG NO	(b) ITEM NO
		FUNCTIONAL GROUP - 60 BULK MATERIALS		CH-47									
			CONTINUED IN.LG,0.063 IN.THK									BULK	
PC-FZ-Z	9320-202-1846	81349	RUBBER SHEET,CELLULAR-CURED.. SYNTHETIC RUBBER EXPLODED CELL STRUCTURE,SMOOTH,BOTH SIDES,FLAME & OIL RESISTANT,MEDIUM GRADE,24 IN.W,24 IN.LG,1/16 IN.THK, MIL-R-6130,TYPE 1,GRADE A	ABC	EA		*	*	*		*		
PC-FZ-Z	9320-202-1847	81349	RUBBER SHEET,CELLULAR..... SYNTHETIC,CURED,EXPLODED CELL STRUCTURE,BOTH SIDES SMOOTH,FIRM GRADE,FIRE & OIL RESISTANT,36 IN.W,36 IN.LG,0.062 IN.THK, MIL-R-6130,TYPE 1,GRADE A	ABC	EA		*	*	*		*		
PC-FZ-Z	9320-232-2438	81349	RUBBER SHEET,CELLULAR..... SYNTHETIC,CURED,EXPLODED CELL STRUCTURE,SMOOTH FINISH,BOTH SIDES,MEDIUM GRADE,FLAME & OIL RESISTANT,36 IN.W,36 IN.LG, 1/4 IN.THK,MIL-R-6130,TYPE 1,GRADE A	ABC	EA		*	*	*		*		
PC-OZ-Z	9320-241-9740	81349	RUBBER SHEET,SOLID-SYNTHETIC. SMOOTH FINISH,BOTH SIDES, FUEL & OIL RESISTANT,36 IN. W,36 IN.LG,1/32 IN.THK, MIL-R-6855,CLASS 1,GRADE 60	ABC	EA		*	*	*		*		
PC-OZ-Z	9320-241-9742	8635993 19200	RUBBER SHEET,SOLID-SYNTHETIC. CURED,BOTH SIDES SMOOTH, FUEL & OIL RESISTANT,36 IN. W,36 IN.LG,0.062 IN.THK, MIL-S-6855,CLASS 1,GRADE 60	ABC	EA		*	*	*		*		
PC-FZ-Z	9320-241-9759	81349	RUBBER SHEET,SOLID-SYNTHETIC. CURED RUBBER,SMOOTH,BOTH SIDES,OIL,OZONE & WEATHER RESISTANT,36 IN.W,36 IN.LG, 0.125 IN.THK,MIL-S-6855, CLASS 2	ABC	EA		*	*	*		*		
PC-FZ-Z	9320-241-9763	81349	RUBBER SHEET,SOLID-SYNTHETIC, CURED,SMOOTH FINISH,BOTH SIDES,OIL,OZONE & WEATHER RFSISTANT,36 IN.W,36 IN.LG, 1/4 IN.THK,MIL-S-6855,CLASS 2,GRADE 60	ABC	EA		*	*	*		*		
C PB-FZ-Z	9320-599-7428	81349	RUBBER SHEET,SOLID-BOTH SIDES SMOOTH,OIL,OZONE & WEATHER RESISTANT,36 IN.W,36 IN.LG, 0.062 IN.THK,MIL-R-6855,	ABC	EA		*	*	*		*		

(1) SMR CODE	(2) FEDERAL STOCK NUMBER	(3) DESCRIPTION REFERENCE NUMBER & MFR CODE		USABLE ON CODE	(4) UNIT OF MEAS	(5) QTY INC IN UNIT	(6) 30-DAY DS/GS MAINT ALW (a) 1-20	(b) 21-50	(c) 51-100	(7) 1-YR ALWPER 100 EQUIP CNTGCY	(8) DEPOT MAINT ALWPER 100 EQUIP	(9) ILLUSTRATION (a) FIG NO	(b) ITEM NO
		FUNCTIONAL GROUP - 60	BULK MATERIALS	CH-47									
			CONTINUED CLASS 4,GRADE 40									BULK	
PB-HZ-Z	9320-599-8440	5200-5187-5194	89616 CLOTH,LAMINATED-2 PLIES NYLON FABRIC,1 LAYER NYLON BINDING,1 SIDE NITRILE RUBBER COATED,BLACK, AROMATIC FUEL RESISTANT,40 IN.W,36 IN.LG	ABC	FT		*	*	*		*		
PA-FZ-Z	9320-618-0918	3278	82918 RUBBER SHEET,SOLID-BOTH SIDES SMOOTH,LOW TEMP RESISTANT, 24 IN.W,24 IN.LG,1/8 IN. THK,FED ZZ-R-765,CLASS IA, GRADE 50	ABC	EA		*	*	*		*		
PC-FZ-Z	9320-729-7066		81349 RUBBER SHEET,CELLULAR..... SYNTHETIC,SOFT,UNEXPLODED CELL STRUCTURE SMOOTH FINISH,BOTH SIDES,24 IN W, 24 IN.LG,0.125 IN.THK, MIL-R-6130,TYPE 2,GRADE B	ABC	EA		*	*	*		*		
PB-OZ-Z	9320-782-7798	EC1202-032-62	76381 TAPE,ADHESIVE,RUBBER..... SYNTHETIC RUBBER,COTTON SHEETING PERMANENT BACKING, PAPER REMOVABLE BACKING, BLACK,ELASTIC,MOISTURE PROOF,5/8 IN.W,200 FT LG, 1/32 IN.THK	ABC	FT		*	*	*		*		
PB-FZ-Z	9320-800-1821		81349 RUBBER SHEET,SOLID-SYNTHETIC. CURED RUBBER,SMOOTH,BOTH SIDES,OIL RESISTANT,36 IN. W,36 IN.LG,0.312 IN.THK, MIL-R-6855,CLASS 2,GRADE 60	ABC	EA		*	*	*		*		
PC-FZ-Z	9320-879-9889		81349 RUBBER SHEET,SOLID-BOTH SIDES SMOOTH,BLACK,OIL,OZONE & WEATHER RESISTANT,0.313 IN. THK,MIL-R-6855,CLASS 2, GRADE 40	ABC	SI		*	*	*		*		
PC-OZ-Z	9320-880-4520	AMS3195-188-500X25FT	81343 RUBBER STRIP-UNEXPLODED CELL. STRUCTURE,BOTH SIDES SMOOTH,BLACK,MEDIUM GRADE, LOW & HIGH TEMP RESISTANT, 1/2 IN.W,300 IN.LG,0.187 IN.THK,MIL-C-3133,TYPE T, STYLE E,GRADE TE12A4F3	ABC	EA		*	*	*		*		
C XB-OZ-Z			81349 RUBBER ROUND SECTION..... SYNTHETIC,SMOOTH FINISH,OIL & WEATHER RESISTANT,0.281 IN.DIA,600 IN.LG,MIL-R-6855	ABC	IN								
PC-FZ-Z	9320-949-8363	5066	89616 RUBBER,SPECIAL SHAPED SECTION	ABC	FT		*	*	*		*		
PB-OZ-Z	9320-995-6909		81349 RUBBER SHEET,CELLULAR..... UNEXPLODED CELL STRUCTURE,	ABC	EA		*	*	*		*		

(1) SMR CODE	(2) FEDERAL STOCK NUMBER	(3) DESCRIPTION REFERENCE NUMBER & MFR CODE		USABLE ON CODE CH-47	(4) UNIT OF MEAS	(5) QTY INC IN UNIT	(6) 30-DAY DS/GS MAINT ALW (a) 1-20	(b) 21-50	(c) 51-100	(7) 1-YR ALWPER 100 EQUIP CNTGCY	(8) DEPOT MAINT ALWPER 100 EQUIP	(9) ILLUSTRATION (a) FIG NO	(b) ITEM NO
		FUNCTIONAL GROUP - 60 BULK MATERIALS											
			CONTINUED BOTH SIDES SMOOTH,OIL & WATER RESISTANT,24 IN.W,24 IN.LG,1/8 IN.THK, MIL-C-3133,TYPE S,CLASS SC, STYLE E,GRADE SCE7L									BULK	
PB-OZ-Z	9330-027-3345	900628-4	00624 TUBE,PLASTIC,SPIRAL WRAP,.... POLYTETRAFLUORETHYLENE, 0.286 IN.ID,0.015 IN.WALL THK,19/64 IN.MIN TO 5/8 IN. MAX DIA BUNDLE COMP	ABC	IN		*	*	*		*		
PC-OZ-Z	9330-089-8033	Y9132B1-83-436YD	76381 TAPE,PLASTIC FOAM.....	ABC	YD		*	*	*		*		
PA-FZ-Z	9330-202-1890		81349 PLASTIC SHEET-CLEAR,36 IN.W,.. 48 IN.LG,1/8 IN.THK, MIL-P-5425,FINISH A	ABC	EA		*	*	*		*		
PA-FZ-Z	9330-202-1900		81349 PLASTIC SHEET-CLEAR,36 IN.W,.. 48 IN.LG,0.080 IN.THK, MIL-P-5425,FINISH A	ABC	EA		*	*	*		*		
PA-FZ-Z	9330-260-3806		81349 PLASTIC SHEET-PHENOLIC,..... W/COTTON FABRIC BASE OR FILLER,PLAIN,OPAQUE,W/PAPER COVERING,NATURAL,29.5 IN.TO 38 IN.W,36 IN.TO 48 IN.LG, 0.250 IN.THK,MIL-P-15035, TYPE FBM	ABC	EA		*	*	*		*		
PA-FZ-Z	9330-260-3807	611360	14170 PLASTIC SHEET-PHENOLIC..... W/COTTON FABRIC BASE OR FILLER,PLAIN,OPAQUE,NATURAL COLOR,W/PAPER COVERING,38 IN.W,48 IN.LG,0.187 IN.THK, MIL-P-15035,TYPE FBM COMP	ABC	EA		*	*	*		*		
PA-FZ-Z	9330-290-3462		81349 PLASTIC SHEET-PHENOLIC..... W/COTTON FABRIC BASE OR FILLER,PLAIN,OPAQUE,W/PAPER COVERING,NATURAL,29.5 IN.TO 38 IN.W,36 IN.TO 48 IN.LG, 0.125 IN.THK,MIL-P-15035, TYPE FBG	ABC	EA		*	*	*		*		
PA-FZ-Z	9330-291-4800		81349 PLASTIC SHEET-ACRYLIC,..... TRANSPARENT,36 IN.W,48 IN. LG,0.187 IN.THK,MIL-P-5425, FINISH A	ABC	EA		*	*	*		*		
PA-FZ-Z	9330-291-5952		81349 PLASTIC SHEET-CLEAR,36 IN.W,.. 48 IN.LG,0.150 IN.THK, MIL-P-5425,FINISH A	ABC	EA		*	*	*		*		
PA-FZ-Z	9330-540-5673		81349 PLASTIC SHEET-PHENOLIC,..... W/COTTON FABRIC BASE OR FILLER,PLAIN,OPAQUE,NATURAL COLOR,W/PAPER COVERING,29.5 IN.TO 38 IN.W,36 IN.TO 48	ABC	EA		*	*	*		*		

(1) SMR CODE	(2) FEDERAL STOCK NUMBER	(3) DESCRIPTION REFERENCE NUMBER & MFR CODE		USABLE ON CODE	(4) UNIT OF MEAS	(5) QTY INC IN UNIT	(6) 30-DAY DS/GS MAINT ALW (a) 1-20	(b) 21-50	(c) 51-100	(7) 1-YR ALWPER 100 EQUIP CNTGCY	(8) DEPOT MAINT ALWPER 100 EQUIP	(9) ILLUSTRATION (a) FIG NO	(b) ITEM NO
		FUNCTIONAL GROUP - 60	BULK MATERIALS	CH-47									
			CONTINUED									BULK	
			IN.LG,1/2 IN.THK, MIL-P-15035,TYPE FBM										
PA-FZ-Z	9330-576-3979	42-798100	81755 PLASTIC SHEET-PHENOLIC,..... W/COTTON FABRIC BASE OR FILLER,OPAQUE,29.5 IN.TO 38 IN.W,36 IN.TO 48 IN.LG,3/32 IN.THK,MIL-P-15035,TYPE FBM	ABC	EA		*	*	*		*		
PB-FZ-Z	9330-579-6686		81349 PLASTIC SHEET-PHENOLIC,..... OPAQUE,29.5 IN.TO 38 IN.W, 36 IN.TO 48 IN.LG,3/4 IN. THK,MIL-P-15035,TYPE FBM COMP	ABC	EA		*	*	*		*		
PA-FZ-Z	9330-580-6886		81349 PLASTIC SHEET..... POLYTETRAFLUOROETHYLENE, WHITE,OPAQUE,36 IN.W,36 IN. LG,1/16 IN.THK,AMS3651	ABC	EA		*	*	*		*		
PC-OZ-Z	9330-664-4871	455-5	76381 PLASTIC STRIP,ADHESIVE..... COATED-POLYVINYL CHLORIDE, ABRASION & GASOLINE RESISTANT,BLACK,5 IN.W,50 YD LG,0.015 IN.THK	ABC	EA		*	*	*		*		
PC-OZ-Z	9330-664-4893	455-3W	76381 PLASTIC STRIP,ADHESIVE COATED POLYVINYL CHLORIDE,BLACK, ABRASION & GASOLINE RESISTANT,PAPER REMOVABLE BACKING,3 IN.W,50 YD LG, 0.010 IN.THK	ABC	YD		*	*	*		*		
PA-FZ-Z	9330-788-9738		81349 PHENOLIC SHEET..... W/COTTON FABRIC BASE OR FILLER,PLAIN,OPAQUE,BLACK, W/PAPER COVERING,29.5 IN.TO 38 IN.W,36 IN.TO 48 IN.LG, 0.187 IN.THK,MIL-P-15035, TYPE FBM COMP	ABC	EA		*	*	*		*		
PA-OZ-Z	9330-809-1463	42-798600	81755 PLASTIC SHEET-PHENOLIC..... COTTON FABRIC BASE OR FILLER,PLAIN,OPAQUE, NATURAL,W/PAPER COVERING, 29-1/2 IN.TO 38 IN.W,36 IN. TO 48 IN.LG,0.125 IN.THK, MIL-P-15035,TYPE FBM	ABC	EA		*	*	*		*		
PB-OZ-Z	9330-836-8493	900628-10	00624 SPIRAL WRAP..... POLYTETRAFLUOROETHYLENE COMP	ABC	FT		*	*	*		*		
PA-FZ-Z	9330-890-2842		81349 PLASTIC SHEET-ACRYLATE RESIN, CLEAR,20 IN.W,48 IN.LG 0.080 IN.THK,MIL-P-25690	ABC	EA		*	*	*		*		
PC-FZ-Z	9390-057-4543	3271-4INX50YDRL	94960 TAPE,REFLECTIVE-ADHESIVE..... BACKING,YELLOW,FUNGUS,	ABC	YD		*	*	*		*		

(1) SMR CODE	(2) FEDERAL STOCK NUMBER	(3) DESCRIPTION REFERENCE NUMBER & MFR CODE		USABLE ON CODE CH-47	(4) UNIT OF MEAS	(5) QTY INC IN UNIT	(6) 30-DAY DS/GS MAINT ALW (a) 1-20	(b) 21-50	(c) 51-100	(7) 1-YR ALWPER 100 EQUIP CNTGCY	(8) DEPOT MAINT ALWPER 100 EQUIP	(9) ILLUSTRATION (a) FIG NO	(b) ITEM NO
		FUNCTIONAL GROUP - 60 BULK MATERIALS											
			CONTINUED SOLVENT & WEATHER RESISTANT,4 IN.W,50 YD LG, FED L-S-300,TYPE 2,CLASS 1									BULK	
PC-FZ-Z	9390-057-4545	3271-3INX50YDROLL	94960 TAPE,REFLECTIVE-ADHESIVE..... BACKING,YELLOW,FUNGUS SOLVENT & WEATHER RESISTANT,3 IN.W,50 YD. LG, FED L-S-300,TYPE 2,CLASS 1	ABC	YD		*	*	*		*		
PB-OZ-Z	9390-106-2465	3271-500X50YDRL	94960 TAPE,REFLECTIVE-YELLOW..... 0.500 IN.W BY 50YDRL	ABC	YD		*	*	*		*		
C PB-OZ-Z	9390-106-2466	3277X500X50YDRL	94960 TAPE,REFLECTIVE-ADHESIVE..... BACKING,GREEN,FUNGUS, MOISTURE,SOLUENT & WEATHER RESISTANT,1/2 IN.W,50 YD LG,FED L-S-300,TYPE 2, CLASS 1	ABC	YD		*	*	*		*		
PB-OZ-Z	9390-106-2467	3272-500X50YDRL	94960 TAPE,REFLECTIVE-ADHESIVE..... BACKING,RED,FUNGUS MOISTURE,SOLVENT & WEATHER RESISTANT,1/2 IN.W,50 YD LG,FED L-S-300,TYPE 2, CLASS 1	ABC	YD		*	*	*		*		
PA-FZ-Z	9390-151-4863	VS80518-1	77272 NONMETALLIC SPECIAL SHAPE.... SECTION COMP	ABC	FT		*	*	*		*		
PC-FZ-Z	9390-165-5988	3870	76381 TAPE,REFLECTIVE-HIGH..... INTENSITY,SILVER,1 IN. W,50 YD LG	ABC	YD		*	*	*		*		
PC-OZ-Z	9390-247-7279	BAC1521-69	81205 NONMETALLIC SPECIAL SHAPED... SECTION-SYNTHETIC RUBBER,1 IN.W,0.060 IN.THK,0.120 IN. FILLET RADIUS,BMS 1-11, GRADE 40	ABC	IN		*	*	*		*		
PA-FZ-Z	9390-289-8702	VS80526	77272 NONMETALLIC,SPECIAL SHAPED... SECTION-SYNTHETIC,CELLULAR, SOLID,1 IN.W,0.380 IN.H, 0.271 IN.ID,0.075 IN.THK, COMP	ABC	IN		*	*	*		*		
PC-OZ-Z	9390-379-2615	33197R	24617 NONMETALLIC,SPECIAL SHAPED... SECTION-SYNTHETIC,SOLID, 0.400 IN.W,0.320 IN.H,112 IN.LG	ABC	EA		*	*	*		*		
PA-FZ-Z	9390-554-9387	A1-4318-1	71643 NONMETALLIC SPECIAL SHAPED... SECTION-SYNTHETIC RUBBER, 0.998 IN.W,0.525 IN.H,0.335 IN.ID,0.105 IN.THK, 120 IN.LG	ABC	EA		*	*	*		*		
PA-OZ-Z	9390-720-4465	LP410A125X36	81348 PLASTIC ROD.....	ABC	EA		*	*	*		*		
PA-FZ-Z	9390-727-4476	VS80541-1	81205 NONMETALLIC,SPECIAL SHAPED...	ABC	FT		*	*	*		*		
C PA-OZ-Z	9390-759-2854	VS80568	77272 RUBBER,SPECIAL SHAPED SECTION	ABC	IN		*	*	*		*		

(1) SMR CODE	(2) FEDERAL STOCK NUMBER	(3) DESCRIPTION REFERENCE NUMBER & MFR CODE			USABLE ON CODE	(4) UNIT OF MEAS	(5) QTY INC IN UNIT	(6) 30-DAY DS/GS MAINT ALW (a) 1-20	(b) 21-50	(c) 51-100	(7) 1-YR ALWPER 100 EQUIP CNTGCY	(8) DEPOT MAINT ALWPER 100 EQUIP	(9) ILLUSTRATION (a) FIG NO	(b) ITEM NO
		FUNCTIONAL GROUP - 60 BULK MATERIALS			CH-47									
				CONTINUED SYNTHETIC,SOLID,1.260 IN.W, 0.190 IN.H.0.040 IN.THK, FED ZZ-R-765,CLASS 3, GRADE 50 COMP									BULK	
	PA-OZ-Z	9390-759-2855	VS80545-1	77272	NONMETALLIC,SPECIAL SHAPED ... SECTION COMP	ABC	IN		*	*	*		*		
	PA-OZ-Z	9390-759-4093	VS80536-1	77272	NONMETALLIC,SPECIAL SHAPED ... SECTION COMP	ABC	IN		*	*	*		*		
	PA-OZ-Z	9390-759-4094	VS80549-1	77272	NONMETALLIC SPECIAL SHAPED... SECTION-COMP	ABC	IN		*	*	*		*		
	PA-OZ-Z	9390-759-9757	VS80551-1	77272	NONMETALLIC SPECIAL SHAPED... SECTION-SYNTHETIC RUBBER, 0.430 IN.W,0.350 IN.H, MIL-R-5847,CLASS 3,GRADE 50	ABC	IN		*	*	*		*		
C	PA-OZ-Z	9390-759-9765	VS80546-1	77272	RUBBER,SPECIAL SHAPED SECTION SYNTHETIC,SOLID,TEAR RESISTANT,0.820 IN.W,0.340 IN.H,0.180 IN.THK, MIL-R-5847,CLASS 3,GRADE 50 COMP	ABC	FT		*	*	*		*		
	PA-OZ-Z	9390-763-4846	VS80514	77272	RUBBER,SPECIAL SHAPED SECTION SYNTHETIC,CELLULAR,1.060 IN.W,1/2 IN.H,0.062 IN.THK, 3/8 IN.ID,0.376 IN.OD,TEAR RESISTANT,FED ZZ-R-765, CLASS 3,GRADE 50	ABC	EA		*	*	*		*		
	PA-OZ-Z	9390-791-7582	VS80544-1	77272	RUBBER,SPECIAL SHAPED SECTION SYNTHETIC,GRAY,TEAR RESISTANT,0.875 IN.W,1/4 IN.H,0.050 IN.THK,40 IN.LG, BUTTONS EQUALLY SPACED ALONG STRIP 1/2 IN.FROM END TO CENTER OF BUTTON,FED ZZ-R-765,CLASS 3,GRADE 50 COMP	ABC	EA		*	*	*		*		
	PA-OZ-Z	9390-791-7789	BAC1530-43	81205	NONMETALLIC SPECIAL SHAPED... SECTION-SYNTHETIC,SOLID, 0.900 IN.W,1/2 IN.H,0.060 IN.THK,OIL & FUEL RESISTANT COMP	ABC	EA		*	*	*		*		
C	PA-FZ-Z	9390-791-7943	VS80540-1	77272	NONMETALLIC,SPECIAL SHAPED.. SYNTHETIC,CELLULAR,5/8 IN. W,0.530 IN.H,0.060 IN.THK, TEAR RESISTANT	ABC	OZ		*	*	*		*		
	PA-OZ-Z	9390-792-1500	VS80502-1	77272	NONMETALLIC SPECIAL SHAPED... SECTION-SYNTHETIC,0.233 IN. W,0.440 IN.H,MIL-R-5847, CLASS 3,GRADE 50	ABC	EA		*	*	*		*		
	PA-OZ-Z	9390-792-1501	7030	71643	NONMETALLIC SPECIAL SHAPED...	ABC	IN		*	*	*		*		

(1) SMR CODE	(2) FEDERAL STOCK NUMBER	(3) DESCRIPTION REFERENCE NUMBER & MFR CODE			USABLE ON CODE	(4) UNIT OF MEAS	(5) QTY INC IN UNIT	(6) 30-DAY DS/GS MAINT ALW (a) 1-20	(b) 21-50	(c) 51-100	(7) 1-YR ALWPER 100 EQUIP CNTGCY	(8) DEPOT MAINT ALWPER 100 EQUIP	(9) ILLUSTRATION (a) FIG NO	(b) ITEM NO
		FUNCTIONAL GROUP - 60 BULK MATERIALS			CH-47									
				CONTINUED SECTION-SYNTHETIC,CELLULAR, 0.600 IN.W,0.600 IN.H,FIRE RESISTANT COMP									BULK	
PA-OZ-Z	9390-792-2306	BAC1530-36	81205	RUBBER,SPECIAL SHAPED SECTION SYNTHETIC,CELLULAR,0.430 IN.W,0.400 IN.H,TEAR RESISTANT,MIL-R-5847,CLASS 3,GRADE 50 COMP	ABC	IN		*	*	*		*		
PA-OZ-Z	9390-880-2732	AN8031-10-120	88044	CORK AND RUBBER CHANNEL..... SYNTHETIC,SOFT,1-1/4 IN. INSIDE W,1-1/2 IN.O-A W,12 IN.LG,0.344 IN.H	ABC	EA		*	*	*		*		
PA-OZ-Z	9390-906-3544	VS80537-1	77272	RUBBER,SPECIAL SHAPED SECTION SYNTHETIC,SOLID,TEAR RESISTANT,1/4 IN.ID,1.370 IN.W,0.620 IN.H,0.060 IN. THK,FED ZZ-R-765,CLASS 3, GRADE 60 COMP	ABC	EA		*	*	*		*		
PA-OZ-Z	9390-910-0102	VS85072-1	77272	NONMETALLIC SPECIAL SHAPED... SECTION-SYNTHETIC,CELLULAR, TEAR RESISTANT,5/8 IN.W, 0.530 IN.H,0.060 IN.THK COMP	ABC	IN		*	*	*		*		
PB-OZ-Z	9390-910-3138	624A5	00624	ASBESTOS STRIP,COMPRESSED....	ABC	IN		*	*	*		*		
PA-OZ-Z	9390-937-2611	VS80570-2	77272	RUBBER,SPECIAL SHAPED SECTION COMP	ABC	EA		*	*	*		*		
PA-OZ-Z	9390-945-4826	BAC1530-48	81205	RUBBER,SPECIAL SHAPED SECTION RUBBER,GRAY,FUEL,AROMOTIC & OIL RESISTANT,80 IN.LG	ABC	EA		*	*	*		*		
PC-OZ-Z	9390-949-8242	BAC1521-669-120	81205	NONMETALLIC SPECIAL SHAPED... SECTION-SYNTHETIC,CELLULAR, OIL RESISTANT,0.750 IN.W, 0.250 IN.H,0.060 IN.THK, 0.188 IN.ID,120 IN.LG COMP	ABC	EA		*	*	*		*		
N PB-OZ-Z	9505-191-1704	QQW470-080-10LBCL	81348	WIRE,STEEL,CARBON-COLD DRAWN. BRIGHT SURFACE FINISH,58.58 FT PER LB,0.08 IN.DIA	ABC	LB						*		
PA-HZ-Z	9505-199-7830		81348	WIRE,STEEL,CARBON-COLD DRAWN. 0.020 IN.DIA,937 FT PER LB, FED QQ-W-470,1 LB SPOOL	ABC	LB		*	*	*		*		
PA-OZ-Z	9505-242-7527		81348	WIRE,STEEL,CORROSION..... RESISTING-ANNEALED,0.047 IN.DIA,168 FT PER LB,FED QQ-W-423,COMP 316,1 LB SPOOL	ABC	LB		*	*	*		*		
PA-FZ-Z	9505-248-9846		81349	WIRE,STEEL,CARBON-LIGHT ZINC. COATED,SOFT TEMPER,COLD DRAWN,BRIGHT,SMOOTH FINISH,	ABC	LB		*	*	*		*		

(1) SMR CODE	(2) FEDERAL STOCK NUMBER	(3) DESCRIPTION REFERENCE NUMBER & MFR CODE		USABLE ON CODE	(4) UNIT OF MEAS	(5) QTY INC IN UNIT	(6) 30-DAY DS/GS MAINT ALW (a) 1-20	(b) 21-50	(c) 51-100	(7) 1 YR ALWPER 100 EQUIP CNTGCY	(8) DEPOT MAINT ALWPER 100 EQUIP	(9) ILLUSTRATION (a) FIG NO	(b) ITEM NO
		FUNCTIONAL GROUP - 60 BULK MATERIALS		CH-47									
			CONTINUED									BULK	
			0.020 IN.DIA,1 LB SPOOL,FED QQ-W-461										
PA-OZ-Z	9505-248-9848		81348 WIRE,STEEL,CARBON-LIGHT ZINC. COATED,SOFT TEMPER,COLD DRAWN,BRIGHT SMOOTH FINISH, 0.032 IN.DIA,1 LB SPOOL,FED QQ-W-461	ABC	LB		*	*	*		*		
PA-OZ-Z	9505-248-9849	MS20995F41	96906 WIRE,STEEL,CARBON-COLD DRAWN, MEDIUM ZINC COATED,SOFT TEMPER,0.041 IN.DIA,FED QQ-W-461	ABC	LB		*	*	*		*		
PA-OZ-Z	9505-248-9851		81348 WIRE,STEEL,CARBON-MEDIUM..... ZINC COATED,SOFT TEMPER, COLD DRAWN,BRIGHT,SMOOTH FINISH,0.063 IN.DIA,95.98 FT PER LB,FED QQ-W-461,1 LB	ABC	LB		*	*	*		*		
PA-OZ-Z	9505-293-4208	MS20995C32	96906 WIRE,STEEL,CORROSION..... RESISTING-ANNEALED,0.032 IN.DIA,361 FT PER LB,FED QQ-W-423,COMP 302,1 LB SPOOL	ABC	LB		*	*	*		*		
PB-FZ-Z	9505-596-1662		81348 WIRE,STEEL,CORROSION..... RESISTING-SPRING TEMPER, 0.090 IN.DIA,45.6 FT PER LB,FED QQ-W-423,COMP 302,10 LB COIL	ABC	LB		*	*	*		*		
PB-OZ-Z	9505-596-1668		81348 WIRE,STEEL,CORROSION..... RESISTING-SPRING TEMPER, 0.051 IN.DIA,142 FT PER LB, FED QQ-W-423,COMP 302,5 LB COIL	ABC	LB		*	*	*		*		
PA-OZ-Z	9505-596-5101	539798	73481 WIRE,STEEL,CORROSION..... RESISTING-ANNEALED,0.020 IN.DIA,925 FT PER LB,FED QQ-W-423,COMP 302,5 LB COIL	ABC	LB		*	*	*		*		
PA-OZ-Z	9505-640-4290		81348 WIRE,STEEL,CORROSION..... RESISTING-ANNEALED,0.032 IN.DIA,161 FT PER LB,FED QQ-W-423,COMP 316,1 LB SPOOL	ABC	LB		*	*	*		*		
PA-OZ-Z	9505-804-3814		81348 WIRE,STEEL,CORROSION..... RESISTING-ANNEALED,BRIGHT FINISH,0.041 IN.DIA,1 LB SPOOL,FED QQ-W-423,COMP 304	ABC	LB		*	*	*		*		
PA-FZ-Z	9505-821-6916		81348 WIRE,STEEL,CORROSION..... RESISTING-SPRING TEMPER,RD, 0.117 IN.DIA,FED QQ-W-423	ABC	LB		*	*	*		*		
PA-DZ-Z	9505-994-4253	502006	73030 WIRE,STEEL,CORROSION..... RESISTING-ANNEALED,	ABC	LB						*		

(1) SMR CODE	(2) FEDERAL STOCK NUMBER	(3) DESCRIPTION REFERENCE NUMBER & MFR CODE		USABLE ON CODE CH-47	(4) UNIT OF MEAS	(5) QTY INC IN UNIT	(6) 30-DAY DS/GS MAINT ALW (a) 1-20	(b) 21-50	(c) 51-100	(7) 1-YR ALWPER 100 EQUIP CNTGCY	(8) DEPOT MAINT ALWPER 100 EQUIP	(9) ILLUSTRATION (a) FIG NO	(b) ITEM NO
		FUNCTIONAL GROUP - 60 BULK MATERIALS											
			CONTINUED PASSIVATED FINISH,0.012 IN. DIA,FED QQ-W-423,COMP 302,1 LB SPOOL									BULK	
R PA-FZ-Z	9505-228-6411		81348 TOOL STEEL,CARBON-SPHERODIZE. ANNEALED,GROUND FINISH,1/4 IN.DIA,3 FT LG, FED QQ-T-580,GRADE B CLASS W1-10	ABC	EA		*	*	*		*		
R PA-FZ-Z	9505-243-7619		81348 TOOL STEEL,CARBON-SPHEROIDIZE ANNEALED,GROUND SURFACE FINISH,11/64 IN.DIA,3 FT LG,FED QQ-T-580,GRADE C, CLASS W1-10 COMP	ABC	EA		*	*	*		*		
PA-DZ-Z	9510-528-4579		81349 METAL ROD,ALLOY,COLD..... FINISHED-CHROME-MOLYBDENUM, 1-1/2 IN.DIA,8 FT TO 16 FT LG,MIL-S-6758 COMP	ABC	IN						*		
PB-FZ-Z	9510-529-8689	EAB622-2	81996 METAL ROD,ALLOY,COLD FINISHED ANNEALED,1/2 IN.DIA,6 FT TO 20 FT LG,MIL-S-6758,COMP 4130	ABC	IN		*	*	*		*		
PA-FZ-Z	9515-142-6190		81349 METAL ROD-18 IN.W,0.100 IN... THK,72 IN.LG,MIL-S-18729, COND A	ABC	LB		*	*	*		*		
PA-FZ-Z	9515-184-8807		81349 METAL ROD,ALLOY,HOT ROLLED... DESCALED,ANNEALED,18 IN.W, 72 IN.LG,0.050 IN.THK, MIL-S-18729	ABC	SH		*	*	*		*		
PA-FZ-Z	9515-184-8808	EAB623-4	81996 METAL ROD,ALLOY,HOT..... ROLLED-ANNEALED,18 IN.W,72 IN.LG,1/16 IN.THK, MIL-S-18729	ABC	LB		*	*	*		*		
C PB-FZ-Z	9515-184-8811		81349 METAL ROD,ALLOY,HOT ROLLED... ANNEALED,18 IN.W,72 IN.LG, 1/8 IN.THK,MIL-S-18729,COMP 4130	ABC	LB		*	*	*		*		
PA-FZ-Z	9515-184-8815		81349 METAL ROD,CORROSION..... RESISTING,COLD ROLLED-QUARTER-HARD,BRIGHT FINISH, 24 IN.W,96 IN.LG,0.025 IN. THK,MIL-S-5059,COMP 301	ABC	SH		*	*	*		*		
PA-FZ-Z	9515-184-8822		81349 METAL ROD,CORROSION..... RESISTING,COLD ROLLED-HALF HARD,BRIGHT FINISH,24 IN.W, 96 IN.LG,0.025 IN.THK, MIL-S-5059,COMP 301	ABC	EA		*	*	*		*		
PA-FZ-Z	9515-184-8843		81349 METAL ROD,CORROSION..... RESISTING,COLD ROLLED ANNEALED,DULL FINISH,24 IN.	ABC	SH		*	*	*		*		

(1) SMR CODE	(2) FEDERAL STOCK NUMBER	(3) DESCRIPTION REFERENCE NUMBER & MFR CODE	USABLE ON CODE	(4) UNIT OF MEAS	(5) QTY INC IN UNIT	(6) 30-DAY DS/GS MAINT ALW (a) 1-20	(b) 21-50	(c) 51-100	(7) 1-YR ALWPER 100 EQUIP CNTGCY	(8) DEPOT MAINT ALWPER 100 EQUIP	(9) ILLUSTRATION (a) FIG NO	(b) ITEM NO
		FUNCTIONAL GROUP - 60 BULK MATERIALS	CH-47									
		CONTINUED									BULK	
		W,96 IN.LG,0.025 IN.THK, MIL-S-6721,COMP TI										
PA-FZ-Z	9515-203-5899	81349 METAL ROD,CORROSION..... RESISTING,COLD ROLLED ANNEALED,BRIGHT SURFACE FINISH,36 IN.W,120 IN.LG, 0.016 IN.THK,MIL-S-5059, COMP 301	ABC	SH		*	*	*		*		
PA-FZ-Z	9515-203-5901	81349 METAL ROD,CORROSION..... RESISTING,COLD ROLLED ANNEALED,DULL FINISH,24 IN. W,96 IN.LG,0.016 IN.THK, MIL-S-6721,COMP TI	ABC	SH		*	*	*		*		
PA-FZ-Z	9515-203-5902	81349 METAL ROD,CORROSION..... RESISTING,COLD ROLLED-ANNEALED,TITANIUM STABILIZED,24 IN.W,96 IN. LG,0.032 IN.THK,MIL-S-6721, COMP TI	ABC	SH		*	*	*		*		
PA-DZ-Z	9515-204-0220	81349 METAL ROD,ALLOY,HOT ROLLED... NORMALIZED,DESCALED FINISH, 48 IN.W,144 IN.LG,1/8 IN. THK,MIL-S-18729,COMP 4130 COMP	ABC	SH						*		
PA-FZ-Z	9515-204-0230	81349 METAL ROD,CORROSION..... RESISTING,COLD ROLLED-ANNEALED,DULL FINISH,24 IN. W,96 IN.LG,0.036 IN.THK, MIL-S-6721,COMP TI	ABC	SH		*	*	*		*		
PA-DZ-Z	9515-222-5079	81348 METAL ROD,CARBON-48 IN.W,.... 96 IN.LG,1 IN.THK,FED QQ-S-741A,GRADE C COMP	ABC	PM						*		
XB-FZ-Z		81349 STEEL STRIP,CORROSION..... RESISTING,COLD ROLLED-18 IN.W,96 IN.LG,0.125 IN.THK, MIL-S-5059 COMP	ABC	SP								
PB-DZ-Z	9515-234-7941	81349 METAL ROD,ALLOY-ANNEALED,18.. IN.W,72 IN.LG,1/2 IN.THK, MIL-S-18729,COMP 4130	ABC	PM						*		
PA-FZ-Z	9515-234-7943	81349 METAL ROD,ALLOY-ANNEALED,18.. IN.W,72 IN.LG,5/16 IN.THK, MIL-S-18729,COMP 4130	ABC	PM		*	*	*		*		
PA-FZ-Z	9515-234-7944	81349 METAL ROD,ALLOY-ANNEALED,18.. IN.W,72 IN.LG,1/4 IN.THK, MIL-S-18729,COMP 4130	ABC	PM		*	*	*		*		
PA-FZ-Z	9515-234-7949	81349 METAL ROD,CORROSION..... RESISTING,COLD ROLLED-ANNEALED,BRIGHT SURFACE FINISH,24 IN.W,96 IN.LG,	ABC	SH		*	*	*		*		

(1) SMR CODE	(2) FEDERAL STOCK NUMBER	(3) DESCRIPTION REFERENCE NUMBER & MFR CODE		* USABLE ON CODE CH-47	(4) UNIT OF MEAS	(5) QTY INC IN UNIT	(6) 30-DAY DS/GS MAINT ALW (a) 1-20	(b) 21-50	(c) 51-100	(7) 1-YR ALWPER 100 EQUIP CNTGCY	(8) DEPOT MAINT ALWPER 100 EQUIP	(9) ILLUSTRATION (a) FIG NO	(b) ITEM NO
		FUNCTIONAL GROUP - 60 BULK MATERIALS											
			CONTINUED 0.020 IN.THK,MIL-S-5059, COMPOSITION 301 COMP									BULK	
PB-FZ-Z	9515-234-7953		81349 STEEL SHEET,CORROSION..... RESISTING,COLD ROLLED-ANNEALED,BRIGHT FINISH,24 IN.W,96 IN.LG,0.063 IN.THK, MIL-S-5059 COMP 301 COMP	ABC	SH		*	*	*		*		
PB-FZ-Z	9515-235-7609		81349 METAL ROD,CORROSION..... RESISTING,COLD ROLLED-HALF HARD,BRIGHT FINISH,36 IN.W, 120 IN.LG,1/32 IN.THK, MIL-S-5059,COMP 301	ABC	SH		*	*	*		*		
C PA-FZ-Z	9515-269-5815		81349 METAL ROD,ALLOY,HOT ROLLED... ANNEALED,18 IN.W,72 IN.LG, 0.080 IN.THK,MIL-S-18729B	ABC	FT		*	*	*		*		
PA-FZ-Z	9515-269-5824		81349 METAL ROD,ALLOY,HOT ROLLED... 18 IN.W,72 IN.LG,0.025 IN. THK,MIL-S-18729-4130N	ABC	SH		*	*	*		*		
PA-FZ-Z	9515-294-9923		81349 METAL ROD,ALLOY..... NORMALIZED,18 IN.W,72 IN. LG,0.375 IN.THK, MIL-S-18729,COMP 4130	ABC	IN		*	*	*		*		
PA-FZ-Z	9515-528-4783	ANQQS685-5	81352 METAL ROD,ALLOY,HOT ROLLED... NORMALIZED,18 IN.W,72 IN. LG,0.040 IN.THK, MIL-S-18729,COMP 4130	ABC	SH		*	*	*		*		
PA-FZ-Z	9515-529-0434		81349 METAL ROD,CORROSION..... RESISTING,COLD ROLLED HALF-HARD,BRIGHT FINISH,24 IN.W,96 IN.LG,0.012 IN.THK, MIL-S-5059,COMP 301	ABC	SH		*	*	*		*		
PA-FZ-Z	9515-580-6551		81349 METAL ROD,ALLOY,HOT ROLLED... 18 IN.W,72 IN.LG,0.071 IN. THK,MIL-S-18729,CONDITICN N	ABC	SP		*	*	*		*		
PA-FZ-Z	9515-596-1727		81349 METAL ROD,CORROSION..... RESISTING,COLD ROLLED-HALF HARD,BRIGHT FINISH,36 IN.W, 120 IN.LG,0.040 IN.THK, MIL-S-5059,COMP 301	ABC	IN		*	*	*		*		
PA-FZ-Z	9515-596-1764		81349 METAL ROD,CORROSION..... RESISTING,COLD ROLLED ANNEALED,DESCALED,DULL PICKLED SURFACE FINISH,36 IN.W,120 IN.LG,0.040 IN. THK,MIL-S-25043	ABC	SH		*	*	*		*		
PA-FZ-Z	9515-596-1765		81349 METAL ROD,CORRISION..... RESISTING,COLD ROLLED ANNEALED,DESCALED,DULL PICKLED SURFACE,FINISH,36	ABC	SH		*	*	*		*		

(1) SMR CODE	(2) FEDERAL STOCK NUMBER	(3) DESCRIPTION REFERENCE NUMBER & MFR CODE		USABLE ON CODE	(4) UNIT OF MEAS	(5) QTY INC IN UNIT	(6) 30-DAY DS/GS MAINT ALW (a) 1-20	(b) 21-50	(c) 51-100	(7) 1-YR ALWPER 100 EQUIP CNTGCY	(8) DEPOT MAINT ALWPER 100 EQUIP	(9) ILLUSTRATION (a) FIG NO	(b) ITEM NO
		FUNCTIONAL GROUP - 60	BULK MATERIALS	CH-47									
			CONTINUED									BULK	
			IN.W,120 IN.LG,0.032 IN. THK,MIL-S-25043										
PA-HZ-Z	9515-596-1944	81349	METAL ROD,ALLOY-18 IN.W,72... IN.LG,0.313 IN.THK, MIL-S-18729,CONDITION N COMP	ABC	PM		*	*	*		*		
PA-FZ-Z	9515-618-7542	81349	METAL ROD,CORROSION..... RESISTING,COLD ROLLED-ANNEALED,CRES,36 IN.W,0.050 IN.THK,1.20 IN.LG, MIL-S-6721	ABC	SH		*	*	*		*		
PA-FZ-Z	9515-618-7720	81349	METAL ROD,ALLOY,HOT ROLLED... NORMALIZED,DESCALED,36 IN. W,72 IN.LG,0.090 IN.THK, MIL-S-18729	ABC	SH		*	*	*		*		
PA-FZ-Z	9515-618-7726	81349	STEEL,SHEET,CORROSION..... RESISTING,COLD ROLLED ANNEALED,DULL FINISH,36 IN. W,120 IN.LG,0.012 IN.THK, MIL-S-6721,COMP TI	ABC	SH		*	*	*		*		
PA-FZ-Z	9515-618-7727	81349	STEEL SHEET,CORROSION..... RESISTING,COLD ROLLED ANNEALED,DULL FINISH,36 IN. W,120 IN.LG,0.040 IN.THK, MIL-S-6721,COMP TI	ABC	SH		*	*	*		*		
PA-FZ-Z	9515-618-8658	81349	METAL ROD,CORROSION..... RESISTING,COLD ROLLED ANNEALED,BRIGHT SURFACE FINISH,36 IN.W,120 IN.LG, 0.020 IN.THK,MIL-S-5059, COMPOSITION 302	ABC	IN		*	*	*		*		
PA-FZ-Z	9515-640-4142	81349	METAL ROD,ALLOY,HOT ROLLED... ANNEALED,DESCALED SURFACE FINISH,36 IN.W,120 IN.LG, 0.160 IN.THK,MIL-S-18729, COMP 4130	ABC	SH		*	*	*		*		
PB-HZ-Z	9515-640-4144	81349	METAL ROD,ALLOY,HOT ROLLED... ANNEALED,DESCALED FINISH, 18 IN.W,72 IN.LG,0.045 IN. THK,MIL-S-18729,COMP 4130	ABC	SH		*	*	*		*		
PA-FZ-Z	9515-640-4145	81349	METAL ROD,ALLOY,HOT ROLLED... ANNEALED,DESCALED FINISH, 36 IN.W,96 IN.LG,0.036 IN. THK,MIL-S-18729,COMP 4130	ABC	SH		*	*	*		*		
PA-FZ-Z	9515-640-4146	81349	METAL ROD,ALLOY,HOT ROLLED... ANNEALED,DESCALED FINISH, 36 IN.W,96 IN.LG,0.032 IN. THK,MIL-S-18729,COMP 4130 COMP	ABC	EA		*	*	*		*		
PA-FZ-Z	9515-640-4237	81349	METAL ROD,CORROSION.....	ABC	SH		*	*	*		*		

(1) SMR CODE	(2) FEDERAL STOCK NUMBER	(3) DESCRIPTION REFERENCE NUMBER & MFR CODE		USABLE ON CODE	(4) UNIT OF MEAS	(5) QTY INC IN UNIT	(6) 30-DAY DS/GS MAINT ALW (a) 1-20	(b) 21-50	(c) 51-100	(7) 1-YR ALW PER 100 EQUIP CNTGCY	(8) DEPOT MAINT ALW PER 100 EQUIP	(9) ILLUSTRATION (a) FIG NO	(b) ITEM NO
		FUNCTIONAL GROUP - 60 BULK MATERIALS		CH-47									
			CONTINUED									BULK	
			RESISTING,COLD ROLLED ANNEALED,DULL FINISH,24 IN. W,96 IN.LG,0.045 IN.THK, MIL-S-6721,COMP TI										
PA-FZ-Z	9515-683-9284	81349	METAL ROD,CORROSION..... RESISTING,COLD ROLLED..... ANNEALED,DULL FINISH,36 IN. W,120 IN.LG,0.020 IN.THK, MIL-S-6721,COMP TI	ABC	SH		*	*	*		*		
PA-FZ-Z	9515-684-4600	81349	METAL ROD,ALLOY,HOT ROLLED... NORMALIZED,DESCALED SURFACE FINISH,48 IN.W,144 IN.LG, 3/32 IN.THK,MIL-S-18729, COMP 4130 COMP	ABC	SH		*	*	*		*		
PA-FZ-Z	9515-684-4601	81349	METAL ROD,ALLOY,HOT ROLLED... NORMALIZED,DESCALED SURFACE FINISH,48 IN.W,144 IN.LG, 0.190 IN.THK,MIL-S-18729, COMP 4130	ABC	SH		*	*	*		*		
PA-FZ-Z	9515-684-4602	81349	METAL ROD,ALLOY,HOT ROLLED... NORMALIZED,DESCALED SURFACE FINISH,48 IN.W,144 IN.LG, 0.100 IN.THK,MIL-S-18729, COMP 4130	ABC	SH		*	*	*		*		
PA-FZ-Z	9515-720-0570	81349	METAL ROD,CORROSION..... RESISTING,COLD ROLLED HALF-HARD,BRIGHT FINISH,36 IN.W,120 IN.LG,0.045 IN. THK,MIL-S-5059,COMP 301	ABC	SH		*	*	*		*		
PA-FZ-Z	9515-815-6435	81349	METAL ROD,CORROSION..... RESISTING,COLD ROLLED ANNEALED,DESCALED,DULL PICKLED SURFACE FINISH,36 IN.W,120 IN.LG,0.025 IN. THK,MIL-S-25043	ABC	IN		*	*	*		*		
PA-FZ-Z	9515-833-2367	81349	METAL ROD,CORROSION..... RESISTING,COLD ROLLED-CRES, ANNEALED,36 IN.W,0.016 IN. THK,120 IN.LG,MIL-S-25043, CONDITION A	ABC	SH		*	*	*		*		
PA-FZ-Z	9525-063-1444	MS9226-05 96906	WIRE,STEEL,CORROSION..... RESISTING RD,ANNEALED,0.040 IN.DIA	ABC	LB		*	*	*		*		
PA-OZ-Z	9525-803-3044	MS20995NC32 96906	WIRE,NICKEL-COPPER ALLOY..... ANNEALED,COLD DRAWN,0.032 IN.DIA,328 FT PER LB,5 LB SPOOL	ABC	LB		*	*	*		*		
R PA-OZ-Z	9505-995-3177	MS9226-04 96906	WIRE,NICKEL-CHROMIUM-IRON.... ALLOY-COLD DRAWN,ANNEALED,	ABC	LB		*	*	*		*		

(1) SMR CODE	(2) FEDERAL STOCK NUMBER	(3) DESCRIPTION REFERENCE NUMBER & MFR CODE		USABLE ON CODE	(4) UNIT OF MEAS	(5) QTY INC IN UNIT	(6) 30-DAY DS/GS MAINT ALW (a) 1-20	(b) 21-50	(c) 51-100	(7) 1-YR ALW PER 100 EQUIP CNTGCY	(8) DEPOT MAINT ALW PER 100 EQUIP	(9) ILLUSTRATION (a) FIG NO	(b) ITEM NO
		FUNCTIONAL GROUP - 60	BULK MATERIALS	CH-47									
			CONTINUED									BULK	
			CORROSION & HEAT RESISTANT, 0.032 IN.DIA,341 FT PER LB, 10 LB REEL										
PA-FZ-Z	9530-017-6412	81348	METAL ROD,ALLOY-GR6061-T6,... 2-1/2 IN.W,10 FT LG,1-1/2 IN.THK,FED QQ-A-225/8	ABC	IN		*	*	*		*		
PA-FZ-Z	9530-053-1844	81348	METAL ROD,ALLOY-1 IN.DIA,.... 8 TO 12 FT LG, FED QQ-A-225/6	ABC	IN		*	*	*		*		
PA-FZ-Z	9530-115-6377	81348	METAL ROD,ALLOY-GR6061-T6,... 3/4 IN.DIA,8 FT TO 12 FT LG,FED QQ-A-225/8	ABC	IN		*	*	*		*		
PB-FZ-Z	9530-167-1818	81349	METAL ROD,IRON ALLOY..... ROD-COLD DRAWN,ANNEALED,3/8 IN.DIA,6 FT TO 20 FT LG, MIL-N-6710	ABC	IN		*	*	*		*		
XB-FZ-Z		81348	METAL ROD,ALLOY..... GR2024-T4,1-1/4 IN.DIA,8 FT TO 12 FT LG,FED QQ-A-268	ABC	IN								
R PA-FZ-Z	9525-204-1050	81348	ALUMINUM ALLOY ROD-GR2024-T4, 5/16 IN.DIA,10 FT TO 12 FT LG,FED QQ-A-200/3 OR QQ-A-225/6	ABC	EA		*	*	*		*		
PA-FZ-Z	9530-228-9313	81348	METAL ROD,ALLOY-GR2024-T4.... 3/4 IN.DIA,10 TO 12 FT LG,FED QQ-A-225/6	ABC	EA		*	*	*		*		
PA-FZ-Z	9530-230-6345	81348	METAL ROD,ALLOY-GR7075-T6,... 7/8 IN.DIA,10 FT TO 12 FT LG,FED QQ-A-200/11 OR QQ-A-225/9	ABC	IN		*	*	*		*		
PA-HZ-Z	9530-231-7686	81348	METAL ROD,ALLOY-GT2024-T4,... 3/8 IN.DIA,10 FT TO 12 FT LG,FED QQ-A-200/3 OR FED QQ-A-225/6	ABC	IN		*	*	*		*		
PA-FZ-Z	9530-233-1280	81348	METAL ROD,ALLOY-GR7075-T6,... 1/2 IN.DIA,10 FT TO 12 FT LG,FED QQ-A-200/11 OR QQ-A-225/9	ABC	IN		*	*	*		*		
C PA-FZ-Z	9530-235-9854	81348	METAL ROD,ALLOY..... FED QQA200/11T6	ABC	IN		*	*	*		*		
C			MATERIALS,T6,0-1 IN.DIA,10 TO 12 FT LG										
PA-FZ-Z	9530-236-1378	81348	METAL ROD,ALLOY-GR2024-T4,... 1-1/8 IN.DIA,10 FT TO 12 FT LG,FED QQ-A-225/6	ABC	IN		*	*	*		*		
PA-FZ-Z	9530-236-7690	81348	METAL ROD,ALLOY-GR2024-T4,... 2-3/4 IN.DIA,10 FT TO 12 FT LG,FED QQ-A-200/3 OR QQ-A-225/6	ABC	IN		*	*	*		*		
PA-FZ-Z	9530-236-8431	81348	METAL ROD,ALLOY-GR2024-T4,...	ABC	IN		*	*	*		*		

1844

(1) SMR CODE	(2) FEDERAL STOCK NUMBER	(3) DESCRIPTION REFERENCE NUMBER & MFR CODE	USABLE ON CODE CH-47	(4) UNIT OF MEAS	(5) QTY INC IN UNIT	(6) 30-DAY DS/GS MAINT ALW (a) 1-20	(b) 21-50	(c) 51-100	(7) 1-YR ALWPER 100 EQUIP CNTGCY	(8) DEPOT MAINT ALWPER 100 EQUIP	(9) ILLUSTRATION (a) FIG NO	(b) ITEM NO
		FUNCTIONAL GROUP - 60 BULK MATERIALS										
		CONTINUED 5/8 IN.DIA,10 FT TO 12 FT LG,FED QQ-A-225/6 OR QQ-A-200/3									BULK	
PB-DZ-Z	9530-237-5156	81348 METAL ROD,ALLOY..... GR2024-T4,FLAT,1 IN.W,3/4 IN.H,10 FT TO 12 FT LG,FED QQ-A-200/3 OR QQ-A-225/6	ABC	IN						*		
PA-DZ-Z	9530-237-5160	81348 METAL ROD,ALLOY-GR2024-T4,... 2 IN.W,3/4 IN.THK,10 FT TO 12 FT LG,FED QQ-A-200/3 OR QQ-A-225/6 COMP	ABC	IN						*		
PA-FZ-Z	9530-244-6931	81348 METAL ROD,ALLOY-GR7075-T6,... 1-3/4 IN.DIA,10 FT TO 12 FT LG,FED QQ-A-200/11 OR QQ-A-225/9	ABC	IN		*	*	*		*		
XB-FZ-Z		81348 ALUMINUM ALLOY ROD-GR6061-T6. RD,5/8 IN.DIA,10 TO 12 FT LG,FED QQ-A-325A	ABC	IN								
PA-FZ-Z	9535-084-4370	81348 METAL ROD,ALLOY..... GR2024-T3,36 IN.W,72 IN.LG, 0.063 IN.THK,FED QQ-A-250/4	ABC	SH		*	*	*		*		
PB-FZ-Z	9535-084-4395	81348 METAL ROD,ALLOY..... GR2024-T3,36 IN.W,72 IN.LG, 0.032 IN.THK,FED QQ-A-250/4	ABC	SH		*	*	*		*		
PA-FZ-Z	9535-084-4430	81348 METAL ROD,ALLOY..... GR2024-T3,ALCLAD,36 IN.W, 72 IN.LG,0.100 IN.THK, FED QQ-A-250/5	ABC	SH		*	*	*		*		
PA-FZ-Z	9535-084-4438	81348 METAL ROD,ALLOY..... GR7075-T6,ALCLAD,36 IN.W, 72 IN.LG,0.016 IN.THK, FED QQ-A-250/13	ABC	SH		*	*	*		*		
PA-FZ-Z	9535-084-4448	81348 METAL ROD ALLOY..... GR6061-T6,36 IN.W,72 IN.LG, 0.063 IN.THK,FED QQ-A-250/11 COMP	ABC	SH		*	*	*		*		
PA-FZ-Z	9535-084-4469	81348 METAL ROD ALLOY..... GR2024-T3,ALCLAD,36 IN.W, 72 IN.LG,0.090 IN.THK, FED QQ-A-250/5	ABC	SH		*	*	*		*		
PA-FZ-Z	9535-084-4484	81348 METAL ROD ALLOY..... GR2024-T3,ALCLAD,36 IN.W, 72 IN.LG,0.020 IN.THK, FED QQ-A-250/5	ABC	SH		*	*	*		*		
PA-FZ-Z	9535-084-4516	81348 METAL ROD ALLOY..... GR2024-T3,ALCLAD,36 IN.W, 72 IN.LG,0.190 IN.THK, FED QQ-A-250/5	ABC	SH		*	*	*		*		
PA-FZ-Z	9535-084-4519	81348 METAL ROD ALLOY.....	ABC	SH		*	*	*		*		

(1) SMR CODE	(2) FEDERAL STOCK NUMBER	(3) DESCRIPTION REFERENCE NUMBER & MFR CODE	USABLE ON CODE	(4) UNIT OF MEAS	(5) QTY INC IN UNIT	(6) 30-DAY DS GS MAINT ALW (a) 1-20	(b) 21-50	(c) 51-100	(7) 1YR ALWPER TOC EQUIP ENTGCY	(8) DEPOT MAINT ALWPER TOC EQUIP	(9) ILLUSTRATION (a) FIG NO	(b) ITEM NO
		FUNCTIONAL GROUP - 60 BULK MATERIALS	CH-47									
		CONTINUED									BULK	
PA-FZ-Z	9535-084-4532	GR7075-T6,ALCLAD,36 IN.W, 72 IN.LG,0.125 IN.THK, FED QQ-A-250/13 81348 METAL ROD ALLOY.....	ABC	SF		*	*	*		*		
PA-FZ-Z	9535-084-4533	GR7075-T6,ALCLAD,36 IN.W, 72 IN.LG,0.071 IN.THK, FED QQ-A-250/13 81348 METAL ROD ALLOY.....	ABC	SH		*	*	*		*		
PA-FZ-Z	9535-084-4538	GR2024-T3,ALCLAD,36 IN.W, 72 IN.LG,0.025 IN.THK, FED QQ-A-250/5 81348 METAL ROD ALLOY.....	ABC	SH		*	*	*		*		
PA-FZ-Z	9535-084-4551	GR6061-T6,36 IN.W,72 IN.LG, 0.050 IN.THK,FED QQ-A-250/11 81348 METAL ROD ALLOY.....	ABC	SH		*	*	*		*		
PA-FZ-Z	9535-084-4558	GR2024-T3,ALCLAD,36 IN.W, 72 IN.LG,0.040 IN.THK, FED QQ-A-250/5 81348 METAL ROD ALLOY.....	ABC	SH		*	*	*		*		
PA-FZ-Z	9535-084-4581	GR2024-T3,ALCLAD,36 IN.W, 72 IN.LG,0.125 IN.THK, FED QQ-A-250/5 81348 METAL ROD ALLOY.....	ABC	SH		*	*	*		*		
PA-FZ-Z	9535-084-4589	GR7075-T6,ALCLAD,36 IN.W, 72 IN.LG,0.040 IN.THK, FED QQ-A-250/13 81348 ALUMINUM ALLOY SHEET.....	ABC	SF		*	*	*		*		
PA-FZ-Z	9535-085-4133	GR7075-T6,ALCLAD,36 IN.W, 72 IN.LG,0.080 IN.THK, FED QQ-A-250/13 81348 METAL ROD ALLOY.....	ABC	SH		*	*	*		*		
PA-FZ-Z	9535-085-4134	GR6061-T6,36 IN.W,72 IN.LG, 0.032 IN.THK,FED QQ-A-250/11 81348 METAL ROD ALLOY.....	ABC	SF		*	*	*		*		
PA-FZ-Z	9535-085-4157	GR2024-T4,36 IN.W,72 IN.LG, 1/4 IN.THK,FED QQ-A-250/4 81348 METAL ROD ALLOY.....	ABC	SH		*	*	*		*		
PA-FZ-Z	9535-085-4169	GR2024-0,ALCLAD,36 IN.W, 72 IN.LG,0.032 IN.THK, FED QQ-A-250/5 81348 METAL ROD ALLOY.....	ABC	SH		*	*	*		*		
PA-FZ-Z	9535-085-4397	GR6061-T6,36 IN.W,72 IN.LG, 1/8 IN.THK,FED QQ-A-250/11 COMP 81348 METAL ROD ALLOY.....	ABC	SH		*	*	*		*		
		GR2024-T3,ALCLAD,36 IN.W, 72 IN.LG,0.080 IN.THK,										

(1) SMR CODE	(2) FEDERAL STOCK NUMBER	(3) DESCRIPTION REFERENCE NUMBER & MFR CODE	USABLE ON CODE CH-47	(4) UNIT OF MEAS	(5) QTY INC IN UNIT	(6) 30-DAY DS/GS MAINT ALW (a) 1-20	(b) 21-50	(c) 51-100	(7) 1-YR ALWPER 100 EQUIP CNTGCY	(8) DEPOT MAINT ALWPER 100 EQUIP	(9) ILLUSTRATION (a) FIG NO	(b) ITEM NO
		FUNCTIONAL GROUP - 60 BULK MATERIALS										
		CONTINUED									BULK	
		FED QQ-A-250/5 COMP										
PA-FZ-Z	9535-085-4408	81348 METAL ROD ALLOY..... GR6061-T6,36 IN.W,72 IN.LG, 0.040 IN.THK,FED QQ-A-250/11	ABC	SH		*	*	*		*		
PA-FZ-Z	9535-085-4409	81348 METAL ROD ALLOY..... GR2024-O,ALCLAD,36 IN.W, 72 IN.LG,0.071 IN.THK, FED QQ-A-250/5	ABC	SH		*	*	*		*		
PA-FZ-Z	9535-086-9459	81348 METAL ROD ALLOY..... GR2024-T3,ALCLAD,36 IN.W, 72 IN.LG,0.156 IN.THK, FED QQ-A-250/5	ABC	SH		*	*	*		*		
PA-FZ-Z	9535-086-9465	81348 METAL ROD ALLOY..... GR7075-T6,ALCLAD,36 IN.W, 72 IN.LG,0.050 IN.THK, FED QQ-A-250/13	ABC	SH		*	*	*		*		
PB-FZ-Z	9535-086-9729	81348 METAL ROD ALLOY..... GR2024-T3,ALCLAD,36 IN.W, 72 IN.LG,0.032 IN.THK, FED QQ-A-250/5 COMP	ABC	SH		*	*	*		*		
PA-FZ-Z	9535-086-9751	81348 METAL ROD ALLOY..... GR7075-T6,ALCLAD,36 IN.W, 72 IN.LG,0.090 IN.THK, FED QQ-A-250/13	ABC	SH		*	*	*		*		
PA-FZ-Z	9535-086-9752	81348 ALUMINUM ALLOY SHEET..... GR2024-T3,36 IN.W,72 IN. LG,0.125 IN.THK,FED QQ-A-250/4	ABC	SF		*	*	*		*		
PB-FZ-Z	9535-086-9753	81348 METAL ROD ALLOY..... GR2024-O,ALCLAD,36 IN.W, 72 IN.LG,0.050 IN.THK, FED QQ-A-250/5	ABC	SH		*	*	*		*		
PA-FZ-Z	9535-086-9808	81348 METAL ROD ALLOY..... GR7075-T6,ALCLAD,36 IN.W, 72 IN.LG,0.020 IN.THK, FED QQ-A-250/13	ABC	SH		*	*	*		*		
PA-FZ-Z	9535-086-9864	81348 METAL ROD ALLOY..... GR7075-T6,ALCLAD,36 IN.W, 72 IN.LG,0.025 IN.THK, FED QQ-A-250/13	ABC	SH		*	*	*		*		
PA-FZ-Z	9535-086-9890	81348 METAL ROD ALLOY..... GR7075-T6,ALCLAD,36 IN.W, 72 IN.LG,0.100 IN.THK, FED QQ-A-250/13	ABC	SF		*	*	*		*		
PA-FZ-Z	9535-088-6599	81348 METAL ROD ALLOY..... GR7075-T6,ALCLAD,36 IN.W, 72 IN.LG,0.063 IN.THK, FED QQ-A-250/13	ABC	SH		*	*	*		*		
PA-FZ-Z	9535-104-5291	81348 METAL ROD ALLOY.....	ABC	SH		*	*	*		*		

(1) SMR CODE	(2) FEDERAL STOCK NUMBER	(3) DESCRIPTION REFERENCE NUMBER & MFR CODE	USABLE ON CODE	(4) UNIT OF MEAS	(5) QTY INC IN UNIT	(6) 30-DAY DS/GS MAINT ALW (a) 1-20	(b) 21-50	(c) 51-100	(7) 1-YR ALWPER 100 EQUIP CNTGCY	(8) DEPOT MAINT ALWPER 100 EQUIP	(9) ILLUSTRATION (a) FIG NO	(b) ITEM NO
		FUNCTIONAL GROUP - 60 BULK MATERIALS	CH-47									
		CONTINUED										
		GR2024-T3,36 IN.W,72 IN.LG, 0.071 IN.THK,FED QQ-A-250/4									BULK	
PA-FZ-Z	9535-106-0609	81348 METAL ROD ALLOY.....	ABC	EA		*	*	*		*		
		GR2024-T3,ALCLAD,36 IN.W,72 IN.LG,0.071 IN.THK,FED QQ-A-250/5										
PB-FZ-Z	9535-167-2173	81348 METAL ROD ALLOY-2024-T3.....	ABC	EA		*	*	*		*		
		36 IN.W,0.020 IN.THK,144 IN.LG,FED QQ-A-250/4										
PA-FZ-Z	9535-167-2174	81348 METAL ROD ALLOY-2024-T3.....	ABC	SH		*	*	*		*		
		36 IN.W,144 IN.LG,0.025 IN. THK,FED QQ-A-250/4 COMP										
PB-DZ-Z	9535-167-2247	81348 METAL ROD ALLOY-GR2024-O.....	ABC	SH						*		
		36 IN.W,144 IN.LG,0.025 IN. THK,FED QQ-A-250/4 COMP										
PA-FZ-Z	9535-167-2248	81348 METAL ROD ALLOY.....	ABC	EA		*	*	*		*		
		GR2024-O,36 IN.W,144 IN.LG, 0.032 IN.THK,FED QQ-A-250/4										
PA-OZ-Z	9535-167-2264	88044 METAL ROD ALLOY.....	ABC	SH		*	*	*		*		
		GR2024-O,ALCLAD,36 IN.W,144 IN.LG,0.020 IN.THK,FED QQ-A-250/5 COMP										
PA-FZ-Z	9535-167-2265	81348 METAL ROD ALLOY-GR2024-O.....	ABC	EA		*	*	*		*		
		ALCLAD,36 IN.W,144 IN.LG, 0.025 IN.THK,FED QQ-A-250/5										
PA-FZ-Z	9535-167-2267	81348 METAL ROD ALLOY.....	ABC	SH		*	*	*		*		
		GR2024-O,ALCLAD,36 IN.W, 144 IN.LG,0.040 IN.THK, FED QQ-A-250/5										
PA-FZ-Z	9535-167-2274	81348 METAL ROD ALLOY.....	ABC	SH		*	*	*		*		
		GR2024-T3,ALCLAD,36 IN.W, 144 IN.LG,0.012 IN.THK, FED QQ-A-250/5										
PA-FZ-Z	9535-167-2277	81348 METAL ROD ALLOY.....	ABC	SH		*	*	*		*		
		GR2024-T3,ALCLAD,36 IN.W, 144 IN.LG,0.020 IN.THK, FED QQ-A-250/5										
PA-FZ-Z	9535-167-2278	81348 METAL ROD ALLOY.....	ABC	SH		*	*	*		*		
		GR2024-T3,ALCLAD,36 IN.W, 144 IN.LG,0.025 IN.THK, FED QQ-A-250/5 COMP										
PA-FZ-Z	9535-167-2279	81348 METAL ROD ALLOY.....	ABC	EA		*	*	*		*		
		GR2024-T3,ALCLAD,36 IN.W, 144 IN.LG,0.032 IN.THK, FED QQ-A-250/5										
PB-FZ-Z	9535-167-2280	81348 METAL ROD ALLOY.....	ABC	EA		*	*	*		*		
		GR2024-T3,ALCLAD,36 IN.W, 144 IN.LG,0.040 IN.THK, FED QQ-A-250/5 COMP										
PB-DZ-Z	9535-203-1888	81348 METAL ROD ALLOY.....	ABC	SH						*		

(1) SMR CODE	(2) FEDERAL STOCK NUMBER	(3) DESCRIPTION REFERENCE NUMBER & MFR CODE	USABLE ON CODE CH-47	(4) UNIT OF MEAS	(5) QTY INC IN UNIT	(6) 30-DAY DS/GS MAINT ALW (a) 1-20	(b) 21-50	(c) 51-100	(7) 1-YR ALWPER 100 EQUIP CNTGCY	(8) DEPOT MAINT ALWPER 100 EQUIP	(9) ILLUSTRATION (a) FIG NO	(b) ITEM NO
		FUNCTIONAL GROUP - 60 BULK MATERIALS										
		CONTINUED HARDENED & PARTIALLY ANNEALED,CHROME PICKLED SURFACE FINISH,48 IN.W,144 IN.LG,0.050 IN.THK,FED QQ-M-44,COND H24,COMP AZ31B									BULK	
PA-FZ-Z	9535-232-0378	81348 METAL ROD ALLOY..... GR2024-T3,ALCLAD,48 IN.W, 144 IN.LG,0.063 IN.THK, FED QQ-A-250/5 COMP	ABC	EA		*	*	*		*		
C PA-FZ-Z	9535-232-0398	81348 METAL ROD ALLOY..... GR2024-T3,ALCLAD,48 IN.W, 144 IN.LG,0.080 IN.THK, FED QQ-A-250/5	ABC	SH		*	*	*		*		
PA-FZ-Z	9535-232-0405	81348 METAL ROD ALLOY..... GR2024-T3,ALCLAD,48 IN.W, 144 IN.LG,0.090 IN.THK,FED QQ-A-250/5	ABC	EA		*	*	*		*		
PA-FZ-Z	9535-232-0418	81348 METAL ROD ALLOY..... GR2024-T3,ALCLAD,48 IN.W, 144 IN.LG,0.125 IN.THK, FED QQ-A-250/5 COMP	ABC	SH		*	*	*		*		
PA-FZ-Z	9535-232-0437	81348 METAL ROD ALLOY..... GR2024-T3,48 IN.W,144 IN. LG,0.190 IN.THK, FED QQ-A-250/5	ABC	SH		*	*	*		*		
PA-OZ-Z	9535-232-0489	81348 METAL ROD ALLOY..... SHEET-GR2024-O,ALCLAD,48 IN.W,144 IN.LG,0.032 IN. THK,FED QQ-A-250/5	ABC	SH		*	*	*		*		
PA-OZ-Z	9535-232-0494	81348 METAL ROD ALLOY..... GR2024-O,ALCLAD,48 IN.W, 144 IN.LG,0.040 IN.THK, FED QQ-A-250/5	ABC	SH		*	*	*		*		
PA-OZ-Z	9535-232-0501	81348 METAL ROD ALLOY..... ALCLAD,GR2024-O,48 IN.W,144 IN.LG,0.050 IN.THK, FED QQ-A-250/5	ABC	SH		*	*	*		*		
PA-FZ-Z	9535-232-0503	81348 METAL ROD ALLOY..... GR2024-O,ALCLAD,24 IN.W,72 IN.LG,0.016 IN.THK, FED QQ-A-250/5	ABC	SH		*	*	*		*		
PA-OZ-Z	9535-232-0519	81348 METAL ROD ALLOY..... GR2024-O,ALCLAD,48 IN.W,144 IN.LG,0.063 IN.THK,FED QQ-A-250/5	ABC	SH		*	*	*		*		
PA-FZ-Z	9535-232-0522	81348 METAL ROD ALLOY..... GR2024-O,ALCLAD,48 IN.W, 144 IN.LG,0.071 IN.THK, FED QQ-A-250/5 COMP	ABC	SH		*	*	*		*		
PA-OZ-Z	9535-232-0525	81348 METAL ROD ALLOY.....	ABC	SH		*	*	*		*		

(1) SMR CODE	(2) FEDERAL STOCK NUMBER	(3) DESCRIPTION REFERENCE NUMBER & MFR CODE	USABLE ON CODE	(4) UNIT OF MEAS	(5) QTY INC IN UNIT	(6) 30-DAY DS/GS MAINT ALW (a) 1-20	(b) 21-50	(c) 51-100	(7) 1-YR ALWPER 100 EQUIP CNTGCY	(8) DEPOT MAINT ALWPER 100 EQUIP	(9) ILLUSTRATION (a) FIG NO	(b) ITEM NO
		FUNCTIONAL GROUP - 60 BULK MATERIALS	CH-47									
		CONTINUED									BULK	
		GR2024-0,ALCLAD,48 IN.W,144 IN.LG 0.080 IN.THK, FED QQ-A-250/5										
PA-OZ-Z	9535-232-0529	81348 METAL ROD ALLOY..... GR2024-0,ALCLAD,48 IN.W,144 IN.LG,0.090 IN.THK, FED QQ-A-250/5	ABC	SH		*	*	*		*		
PA-OZ-Z	9535-232-0532	81348 METAL ROD ALLOY..... GR2024-0,ALCLAD,48 IN.W,144 IN.LG,1/8 IN.THK,FED QQ-A-250/5	ABC	SH		*	*	*		*		
PA-FZ-Z	9535-232-0543	81348 METAL ROD ALLOY..... GR2024-T3,ALCLAD,36 IN.W, 144 IN.LG,0.016 IN.THK, FED QQ-A-250/5	ABC	SH		*	*	*		*		
PB-FZ-Z	9535-232-0565	81348 METAL ROD ALLOY..... GR2024-T3,ALCLAD,48 IN.W, 144 IN.LG,0.032 IN.THK, FED QQ-A-250/5 COMP	ABC	SH		*	*	*		*		
PB-FZ-Z	9535-232-0569	81348 METAL ROD ALLOY..... GR2024-T3,ALCLAD,48 IN.W, 144 IN.LG,0.050 IN.THK, FED QQ-A-250/5	ABC	EA		*	*	*		*		
PA-FZ-Z	9535-232-0583	81348 METAL ROD ALLOY..... GR2024-T3,ALCLAD,48 IN.W, 144 IN.LG,0.040 IN.THK, FED QQ-A-250/5	ABC	SH		*	*	*		*		
PA-FZ-Z	9535-232-1882	81348 METAL ROD ALLOY..... GR6061-T6,48 IN.W,144 IN. LG,0.063 IN.THK, FED QQ-A-250/11	ABC	EA		*	*	*		*		
PA-FZ-Z	9535-232-1884	81348 METAL ROD ALLOY..... GR6061-T6,36 IN.W,96 IN.LG, 1/8 IN.THK,FED QQ-A-250/11	ABC	SH		*	*	*		*		
C PA-DZ-Z	9535-232-1886	81348 METAL ROD ALLOY-48 IN..... W,0.160 IN.THK,144 IN.LG, FED QQ-A-250/11T6	ABC	SH						*		
PA-FZ-Z	9535-232-6947	81348 METAL ROD ALLOY..... GR2014-T4,48 IN.W,144 IN. LG,1/4 IN.THK, FED QQ-A-250/4 COMP	ABC	PM		*	*	*		*		
PA-FZ-Z	9535-232-7525	81348 METAL ROD ALLOY-48 IN..... W,144 IN.LG,0.125 IN.THK, FED QQ-A-355/T36 COMP	ABC	EA		*	*	*		*		
PA-FZ-Z	9535-232-7531	81348 METAL ROD ALLOY..... GR7075-T6,ACCLAD,36 IN.W, 144 IN.LG,0.016 IN.THK,FED QQ-A-250/13	ABC	EA		*	*	*		*		
PA-FZ-Z	9535-232-7533	81348 METAL ROD ALLOY.....	ABC	EA		*	*	*		*		

(1) SMR CODE	(2) FEDERAL STOCK NUMBER	(3) DESCRIPTION REFERENCE NUMBER & MFR CODE		USABLE ON CODE	(4) UNIT OF MEAS	(5) QTY INC IN UNIT	(6) 30-DAY DS/GS MAINT ALW (a) 1-20	(b) 21-50	(c) 51-100	(7) 1-YR ALWPER 100 EQUIP CNTGCY	(8) DEPOT MAINT ALWPER 100 EQUIP	(9) ILLUSTRATION (a) FIG NO	(b) ITEM NO
		FUNCTIONAL GROUP - 60	BULK MATERIALS	CH-47								BULK	
			CONTINUED GR7075-T6,ALCLAD,36 IN.W, 144 IN.LG,0.020 IN.THK, FED QQ-A-250/13										
PA-FZ-Z	9535-232-7534	81348	METAL ROD ALLOY..... GR7075-T6,48 IN.W,144 IN. LG,0.025 IN.THK,FED QQ-A-250/13 COMP	ABC	EA		*	*	*		*		
C PA-FZ-Z	9535-232-7535	81348	METAL ROD ALLOY..... GR7075-T6,ALCLAD,48 IN.W, 144 IN.LG,0.032 IN.THK, FED QQ-A-250/13 COMP	ABC	SH		*	*	*		*		
C PA-FZ-Z	9535-232-7536	81348	METAL ROD ALLOY-ALCLAD..... 0.040 IN.THK,48 IN.W,144 IN.LG,FED QQ-A-250/13, 7075-T6	ABC	SH		*	*	*		*		
PA-FZ-Z	9535-232-7539	81348	METAL ROD ALLOY..... GR7075-T6,ALCLAD,48 IN.W, 144 IN.LG,0.063 IN.THK, FED QQ-A-250/13	ABC	SH		*	*	*		*		
PA-FZ-Z	9535-232-7541	81348	METAL ROD ALLOY..... GR7075-T6,ALCLAD,48 IN.W, 144 IN.LG,0.071 IN.THK,FED QQ-A-250/13 COMP	ABC	EA		*	*	*		*		
PA-FZ-Z	9535-232-7542	81348	METAL ROD ALLOY..... GR7075-T6,ALCLAD,48 IN.W, 144 IN.LG,0.080 IN.THK,FED QQ-A-250/13	ABC	SH		*	*	*		*		
PA-FZ-Z	9535-232-8825	81348	METAL ROD ALLOY..... GR2024-T3,48 IN.W,144 IN. LG,0.063 IN.THK,FED QQ-A-250/4 COMP	ABC	EA		*	*	*		*		
PB-FZ-Z	9535-232-8846	81348	METAL ROD ALLOY..... GR2024-T3,48 IN.W,144 IN. LG,0.032 IN.THK, FED QQ-A-250/4	ABC	SH		*	*	*		*		
PA-FZ-Z	9535-236-7073	81348	METAL ROD ALLOY-48 IN..... W,144 IN.LG,0.093 IN.THK, FED QQ-A-250/13,7075-T6	ABC	SH		*	*	*		*		
PA-FZ-Z	9535-236-7074	81348	METAL ROD ALLOY..... GR7075-T6,ALCLAD,48 IN.W, 144 IN.LG,0.100 IN.THK,FED QQ-A-250/13	ABC	SH		*	*	*		*		
PA-FZ-Z	9535-236-7075	81348	METAL ROD ALLOY..... GR7075-T6,ALCLAD,48 IN.W, 144 IN.LG,1/8 IN.THK, FED QQ-A-250/13	ABC	SH		*	*	*		*		
PA-FZ-Z	9535-236-7091	81348	METAL ROD ALLOY..... GR7075-T6,ALCLAD,24 IN.W,72 IN.LG,0.012 IN.THK,FED	ABC	SH		*	*	*		*		

(1) SMR CODE	(2) FEDERAL STOCK NUMBER	(3) DESCRIPTION REFERENCE NUMBER & MFR CODE	USABLE ON CODE	(4) UNIT OF MEAS	(5) QTY INC IN UNIT	(6) 30-DAY DS 'GS MAINT ALW (a) 1-20	(b) 21-50	(c) 51-100	(7) 1 YR ALW PER 100 EQUIP CNTGCY	(8) DEPOT MAINT ALW PER 100 EQUIP	(9) ILLUSTRATION (a) FIG NO	(b) ITEM NO
		FUNCTIONAL GROUP - 60 BULK MATERIALS	CH-47									
		CONTINUED										
PA-FZ-Z	9535-242-5665	QQ-A-250/13 81349 METAL ROD ALLOY..... 565 FT LG,0.003 IN.THK, MIL-A-148,TYPE 1,GRADE B	ABC	FT		*	*	*		*	BULK	
PA-FZ-Z	9535-242-8604	81348 METAL ROD ALLOY..... GR5052-H34,36 IN.W,0.090 IN.THK,96 IN.LG,FED QQ-A-250/8 COMP	ABC	SH		*	*	*		*		
PA-FZ-Z	9535-243-1875	81349 SHIM STOCK,LAMINATED-BRASS,.. 8 IN.W,48 IN.LG,0.062 IN. THK,0.002 IN.THK, LAMINATIONS,MIL-S-22499, COMPOSITION 2,TYPE 1, CLASS 1	ABC	EA		*	*	*		*		
PA-FZ-Z	9535-243-3513	81348 METAL ROD ALLOY-48 IN..... W,144 IN.LG,0.127 IN.THK, FED QQ-A-250/12	ABC	SH		*	*	*		*		
PA-OZ-Z	9535-249-5803	81348 METAL ROD ALLOY..... GR7075-T6,ALCLAD,36 IN.W, 144 IN.LG,0.025 IN.THK, FED QQ-A-250/13 COMP	ABC	SH		*	*	*		*		
PA-FZ-Z	9535-249-5808	81348 METAL ROD ALLOY..... GR7075-T6,ALCLAD,36 IN.W, 144 IN.LG,0.040 IN.THK, FED QQ-A-250/13	ABC	SH		*	*	*		*		
PA-FZ-Z	9535-249-5809	81348 METAL ROD ALLOY-48 IN..... W,144 IN.LG,0.050 IN.THK, FED QQ-A-250/13,7075-T6	ABC	EA		*	*	*		*		
PA-FZ-Z	9535-249-5811	81348 METAL ROD ALLOY..... GR7075-T6,ALCLAD,36 IN.W, 144 IN.LG,0.032 IN.THK, FED QQ-A-250/13	ABC	SH		*	*	*		*		
PA-FZ-Z	9535-249-5813	81348 METAL ROD ALLOY..... GR7075-T6,ALCLAD,48 IN.W, 144 IN.LG,1/4 IN.THK,FED QQ-A-250/13	ABC	PM		*	*	*		*		
PA-FZ-Z	9535-250-6499	81348 METAL ROD ALLOY..... GR6061-T6,36 IN.W,96 IN.LG, 0.032 IN.THK, FED QQ-A-250/11 COMP	ABC	SH		*	*	*		*		
PA-FZ-Z	9535-250-6500	81348 METAL ROD ALLOY..... GR6061-T6,48 IN.W,144 IN. LG,0.032 IN.THK, FED QQ-A-250/11	ABC	SH		*	*	*		*		
PA-FZ-Z	9535-250-6502	81348 METAL ROD ALLOY..... GR6061-T6,48 IN.W,144 IN. LG,0.040 IN.THK, FED QQ-A-250/11	ABC	SH		*	*	*		*		
PA-FZ-Z	9535-250-6907	81348 METAL ROD ALLOY.....	ABC	SH		*	*	*		*		

(1) SMR CODE	(2) FEDERAL STOCK NUMBER	(3) DESCRIPTION REFERENCE NUMBER & MFR CODE	USABLE ON CODE CH-47	(4) UNIT OF MEAS	(5) QTY INC IN UNIT	(6) 30-DAY DS/GS MAINT ALW (a) 1-20	(b) 21-50	(c) 51-100	(7) 1-YR ALWPER 100 EQUIP CNTGCY	(8) DEPOT MAINT ALWPER 100 EQUIP	(9) ILLUSTRATION (a) FIG NO	(b) ITEM NO
		FUNCTIONAL GROUP - 60 BULK MATERIALS										
		CONTINUED									BULK	
		GR6061-T6,48 IN.W,144 IN. LG,0.050 IN.THK,FED QQ-A-250/11										
PA-HZ-Z	9535-254-4262	81349 METAL ROD ANNEALED..... FINISH,12 IN.W,14 FT LG, 0.005 IN.THK,MIL-A-148, TYPE 1,GRADE B,1 LB ROLL	ABC	FT		*	*	*		*		
PA-FZ-Z	9535-288-0666	81348 METAL ROD ALLOY..... GR7075-T6,ALCLAD,48 IN.W, 220 IN.LG,0.063 IN.THK,FED QQ-A-250/13	ABC	EA		*	*	*		*		
PA-FZ-Z	9535-288-0675	81348 METAL ROD ALLOY..... GR2024-T3,ALCLAD,48 IN.W, 144 IN.LG,0.100 IN.THK, FED QQ-A-250/5	ABC	SH		*	*	*		*		
PA-DZ-Z	9535-528-7174	81348 METAL ROD-GR1100-0,36..... IN.W,72 IN.LG,0.032 IN. THK,FED QQ-A-250/1 COMP	ABC	SH						*		
PB-DZ-Z	9535-529-8910	81348 METAL ROD ALLOY SHEET-STRAIN. HARDENED & PARTIALLY ANNEALED,CHROME PICKLED SURFACE FINISH,48 IN.W,144 IN.LG,0.100 IN.THK,FED QQ-M-44,COND H24,COMP AZ31B	ABC	SH						*		
PA-FZ-Z	9535-542-4702	81348 METAL ROD ALLOY..... FED QQ-M-44AZ31B-H24	ABC	SH		*	*	*		*		
PB-DZ-Z	9535-542-4704	81348 METAL ROD ALLOY SHEET STRAIN. HARDENED & PARTIALLY ANNEALED,CHROME PICKLED SURFACE FINISH,48 IN.W,144 IN.LG,0.040 IN.THK,FED QQ-M-44,COND H24,COMP AZ31B	ABC	IN						*		
PA-FZ-Z	9535-542-4705	AZ31B 81348 METAL ROD ALLOY SHEET-48..... IN.W,144 IN.LG,0.032 IN. THK,COMPOSITION AZ31B,H24 TEMPER,FED QQ-M-44A	ABC	EA		*	*	*		*		
PB-FZ-Z	9535-554-1417	EAB621 81996 METAL ROD ALLOY..... ALCLAD,GR2024-0,36 IN.W,48 IN.LG,0.063 IN.THK, FED QQ-A-250/5	ABC	SH		*	*	*		*		
PA-FZ-Z	9535-554-1418	81349 SHIM STOCK,LAMINATED-BRASS,8. IN.W,24 IN.LG,0.062 IN.THK, 0.002 IN.THK LAMINATIONS, MIL-S-22499,COMP 2,TYPE 1, CLASS 1	ABC	SH		*	*	*		*		
PA-FZ-Z	9535-555-8862	81348 METAL ROD ALLOY..... STRAIN HARDENED THEN PARTIALLY ANNEALED,CHROME PICKLED SURFACE FINISH,48	ABC	SH		*	*	*		*		

(1) SMR CODE	(2) FEDERAL STOCK NUMBER	(3) DESCRIPTION REFERENCE NUMBER & MFR CODE	USABLE ON CODE	(4) UNIT OF MEAS	(5) QTY INC IN UNIT	(6) 30-DAY DS/GS MAINT ALW (a) 1-20	(b) 21-50	(c) 51-100	(7) 1-YR ALWPER 100 EQUIP	(8) DEPOT MAINT ALWPER 100 EQUIP	(9) ILLUSTRATION (a) FIG NO	(b) ITEM NO
		FUNCTIONAL GROUP - 60 BULK MATERIALS	CH-47									
		CONTINUED										
		IN.W,144 IN.LG,0.025 IN. THK,FED QQ-M-44,COMPOSITION AZ31B,COND H24									BULK	
PA-FZ-Z	9535-575-5979	81348 METAL ROD ALLOY SHEET-STRAIN. HARDENED & PARTIALLY ANNEALED,CHROME-PICKLED SURFACE FINISH,36 IN.W,72 IN.LG,0.020 IN.THK,FED QQ-M-44,COMP AZ31B-H24	ABC	SF		*	*	*		*		
PA-FZ-Z	9535-575-5980	81348 METAL ROD ALLOY SHEET-STRAIN. HARDENED & PARTIALLY ANNEALED,CHROME-PICKLED SURFACE FINISH,36 IN.W,72 IN.LG,0.063 IN.THK, FED QQ-M-44,COMP AZ31B-H24	ABC	SH		*	*	*		*		
XB-FZ-Z		81348 ALUMINUM SHIM STOCK..... GR1100-H18,36 IN.W,72 IN. LG,0.125 IN.THK, FED QQ-A-250/1	ABC	EA								
PA-DZ-Z	9535-596-3794	81349 METAL SHEET-GR6061-T6,..... ALUMINUM ALLOY,36 IN.W,144 IN.LG,0.025 IN.THK,FED QQ-A-250/11	ABC	SH						*		
PA-FZ-Z	9535-640-2311	81348 METAL ROD ALLOY SHEET-ALCLAD. GR2024-T3,36 IN.W,144 IN. LG,0.050 IN.THK,FED QQ-A-250/5 COMP	ABC	SH		*	*	*		*		
PA-FZ-Z	9535-640-4225	81348 METAL ROD ALLOY..... GR7075-T6,ALCLAD,48 IN.W, 144 IN.LG,0.160 IN.THK, FED QQ-A-250/13	ABC	SH		*	*	*		*		
PB-FZ-Z	9535-640-4273	81348 METAL ROD ALLOY..... ALCLAD,GR2024-T3,48 IN.W, 144 IN.LG,0.160 IN.THK, FED QQ-A-250/5	ABC	SH		*	*	*		*		
PA-DZ-Z	9535-640-4274	81348 METAL ROD ALLOY..... GR2024-0,ALCLAD,48 IN.W,144 IN.LG,0.100 IN.THK,FED QQ-A-250/5	ABC	SH		*	*	*		*		
PA-FZ-Z	9535-684-4140	81348 ALUMINUM SHIM STOCK..... LAMINATED-24 IN.W,48 IN.LG, 0.094 IN.THK,FED QQ-A-250/1,TYPE 1,CLASS 2	ABC	SH		*	*	*		*		
PB-DZ-Z	9535-727-0715	81348 METAL ROD ALLOY SHEET-STRAIN. HARDENED & PARTIALLY ANNEALED,CHROME PICKLED SURFACE FINISH,48 IN.W,144 IN.LG,0.090 IN.THK,FED QQ-M-44,COND H24,COMP AZ31B	ABC	SH						*		
XB-DZ-Z		81348 METAL ROD ALLOY SHEET-STRAIN.	ABC	SH								

(1) SMR CODE	(2) FEDERAL STOCK NUMBER	(3) DESCRIPTION REFERENCE NUMBER & MFR CODE		USABLE ON CODE CH-47	(4) UNIT OF MEAS	(5) QTY INC IN UNIT	(6) 30-DAY DS/GS MAINT ALW (a) 1-20	(b) 21-50	(c) 51-100	(7) 1-YR ALWPER 100 EQUIP CNTGCY	(8) DEPOT MAINT ALWPER 100 EQUIP	(9) ILLUSTRATION (a) FIG NO	(b) ITEM NO
		FUNCTIONAL GROUP - 60	BULK MATERIALS										
			CONTINUED HARDENED & PARTIALLY ANNEALED,CHROME PICKLED SURFACE FINISH,36 IN.W,98 IN.LG,1/8 IN.THK,FED QQ-M-44,COND H24,COMP AZ31B									BULK	
XB-DZ-Z			81348 METAL ROD ALLOY..... GR2024-T351,12 IN.W,12 IN. LG,1 IN.THK,FED QQ-A-250/4 COMP	ABC	EA								
PB-FZ-Z	9540-017-6413	BAC1505-100104	81205 LUMINUM ALLOY TEE.....	ABC	IN		*	*	*		*		
PB-FZ-Z	9540-022-3193	BAC1506-1698	81205 LUMINUM ALLOY TEE.....	ABC	IN		*	*	*		*		
PB-FZ-Z	9540-022-3194	BAC1505-100515	81205 LUMINUM ALLOY TEE.....	ABC	IN		*	*	*		*		
PB-FZ-Z	9540-022-3195	BAC1505-100511	81205 LUMINUM ALLOY TEE.....	ABC	IN		*	*	*		*		
PA-FZ-Z	9540-078-6107	AND10136-1301	99237 ALUMINUM ALLOY T-SECTION..... FED QQ-A-200	ABC	IN		*	*	*		*		
PB-FZ-Z	9540-102-4687	AND10139-0707	99237 LUMINUM ALLOY TEE..... FED QQ-A-200	ABC	IN		*	*	*		*		
PB-FZ-Z	9540-104-5286	NAS345-134	80205 ALUMINUM ALLOY CHANNEL.....	ABC	IN		*	*	*		*		
XB-FZ-Z		NAS344-53	80205 ALUMINUM ALLOY TEE.....	ABC	IN								
XB-FZ-Z		BAC1505-100023	81205 ALUMINUM ALLOY TEE.....	ABC	IN								
XB-FZ-Z		BAC1503-100043	81205 ALUMINUM ALLOY ANGLE.....	ABC	IN								
PA-FZ-Z	9540-133-6499	BAC1517-1521X8FT	81205 ALUMINUM ALLOY ANGLE.....	ABC	FT		*	*	*		*		
C PA-FZ-Z	9540-142-6933	DC4563	96717 MAGNESIUM COMP.....	ABC	FT		*	*	*		*		
R PA-FZ-Z	9540-006-4911	AND10133-1001	81348 ALUMINUM ALLOY EXTRUDED.....	ABC	IN		*	*	*		*		
PA-FZ-Z	9540-145-4508	AND10133-1201	99237 ALUMINUM ALLOY ANGLE..... GR2024-T4,90 DEG,1.250 IN.H OF BOTH LEGS,0.063 IN.THK OF BOTH LEGS,10 FT TO 12 FT LG,FED QQ-A-200/3	ABC	IN		*	*	*		*		
R PA-FZ-Z	9540-185-3761	AND10134-1204	99237 ALUMINUM ALLOY ANGLE..... FED QQ-A-200/11 COMP GR7075-T6,90 DEG,EXTRUDED, 1.000 H,1.250 IN.W,FED QQ-A-200/11	ABC	IN		*	*	*		*		
C C C PA-FZ-Z	9540-145-4519		81348 ALUMINUM ALLOY ANGLE..... GR7075-T6,90 DEG,3/4 IN.LG OF ONE LEG,1.000 IN.LG OF OTHER LEG,0.063 IN.THK OF BOTH LEGS,10 FT TO 12 FT LG,FED QQ-A-200/11 COMP	ABC	IN		*	*	*		*		
PA-FZ-Z	9540-145-5699	AND10135-1002	99237 ALUMINUM ALLOY ANGLE..... GR7075-T6,0.750 IN.DIA,10 TO 12 FT LG,FED QQ-A-200/11	ABC	IN		*	*	*		*		
PA-FZ-Z	9540-145-5716		81348 ALUMINUM ALLOY ANGLE..... GR7075-T6,90 DEG,EXTRUDED, 1.500 IN.LG OF ONE LEG, 1.750 IN.LG OF OTHER LEG, 0.156 IN.THK,10 FT TO 12 FT LG,FED QQ-A-277 COMP	ABC	IN		*	*	*		*		
C PA-FZ-Z	9540-197-9840	AND10133-1203	99237 ALUMINUM ALLOY ANGLE.....	ABC	IN		*	*	*		*		

	(1) SMR CODE	(2) FEDERAL STOCK NUMBER	(3) DESCRIPTION REFERENCE NUMBER & MFR CODE		USABLE ON CODE	(4) UNIT OF MEAS	(5) QTY INC IN UNIT	(6) 30-DAY DS/GS MAINT ALW (a) 1-20	(b) 21-50	(c) 51-100	(7) 1-YR ALWPER 100 EQUIP CNTGCY	(8) DEPOT MAINT ALWPER 100 EQUIP	(9) ILLUSTRATION a. FIG NO	b. ITEM NO
			FUNCTIONAL GROUP - 60	BULK MATERIALS	CH-47									
				CONTINUED										
				GR7075-T6,90 DEG,1-1/4 IN.H OF BOTH LEGS,1/8 IN.THK OF BOTH LEGS,10 FT TO 12 FT LG,FED QQ-A-200/11									BULK	
	PA-FZ-Z	9540-145-8449	AND10133-1202	99237 ALUMINUM ALLOY ANGLE..... FED QQ-A-200/11	ABC	IN		*	*	*		*		
	XB-FZ-Z		AND10137-1005	99237 ALUMINUM ALLOY CHANNEL..... FED QQ-A-200/11	ABC	IN								
R	PA-FZ-Z	9540-008-6025	AND10136-1401	99237 ALUMINUM ALLOY TEE..... FED QQ-A-200/11	ABC	IN		*	*	*		*		
C	PB-FZ-Z	9540-151-5114	AND10133-0601	99237 ALUMINUM ALLOY ANGLE.....	ABC	IN		*	*	*		*		
	PA-FZ-Z	9540-186-6333	AND10134-1406	99237 ALUMINUM ALLOY ANGLE..... GR7075-T6,90 DEG,1-1/4 IN. LG OF ONE LEG,1-1/2 IN.LG OF OTHER LEG,0.094 IN.THK OF BOTH LEGS,10 FT TO 12 FT LG,FED QQ-A-200/11	ABC	FT		*	*	*		*		
	PA-FZ-Z	9540-186-6334		81348 ALUMINUM ALLOY ANGLE..... GR2024-T4,90 DEG,0.125 IN.THK,10 TO 12 FT LG,FED QQ-A-200/3	ABC	IN		*	*	*		*		
	PA-FZ-Z	9540-197-9840		81348 ALUMINUM ALLOY ANGLE..... GR7075-T6,90 DEG,1-1/4 IN.H OF BOTH LEGS,1/8 IN.THK OF BOTH LEGS,FED QQ-A-200/11	ABC	IN		*	*	*		*		
	PA-FZ-Z	9540-231-9911	AND10133-2003	99237 ALUMINUM ALLOY ANGLE..... GR7075-T6,90 DEG,2 IN.H OF BOTH LEGS,0.188 IN.THK OF BOTH LEGS,10 FT TO 12 FT LG,FED QQ-A-200/11	ABC	IN		*	*	*		*		
	PA-FZ-Z	9540-234-0592		81348 ALUMINUM ALLOY ANGLE..... FED QQ-A-200/11 COMP	ABC	IN		*	*	*		*		
	PA-FZ-Z	9540-234-0610	AND10137-2404	99237 ALUMINUM ALLOY CHANNEL..... FED QQ-A-200/11	ABC	IN		*	*	*		*		
C	PA-FZ-Z	9540-482-9572	AND10136-3005	99237 ALUMINUM ALLOY T-SECTION..... GR7075-T6,3 IN.W ACROSS TOP,2-1/2 IN.H,0.125 IN. THK,10 FT TO 12 FT LG, FED QQ-A-200/11	ABC			*	*	*		*		
	PA-FZ-Z	9540-236-3967	AND10134-2405	99237 ALUMINUM ALLOY ANGLE..... FED QQ-A-200/11	ABC	IN		*	*	*		*		
	PB-FZ-Z	9540-247-2176	BAC1503-1420	81205 ALUMINUM ALLOY ANGLE..... GR7075-T6,90 DEG,3/4 IN.LG OF BOTH LEGS,0.040 IN.THK OF BOTH LEGS,10 FT TO 12 FT LG,FED QQ-A-200/11	ABC	IN		*	*	*		*		
	PA-FZ-Z	9540-251-2569	AND10134-1405	99237 ALUMINUM ALLOY ANGLE..... GR7075-T6,90 DEG,1 IN.H OF ONE LEG,1-1/2 IN.H OF OTHER	ABC	IN		*	*	*		*		

(1) SMR CODE	(2) FEDERAL STOCK NUMBER	(3) DESCRIPTION REFERENCE NUMBER & MFR CODE			USABLE ON CODE CH-47	(4) UNIT OF MEAS	(5) QTY INC IN UNIT	(6) 30-DAY DS/GS MAINT ALW (a) 1-20	(b) 21-50	(c) 51-100	(7) 1-YR ALWPER 100 EQUIP CNTGCY	(8) DEPOT MAINT ALWPER 100 EQUIP	(9) ILLUSTRATION (a) FIG NO	(b) ITEM NO
		FUNCTIONAL GROUP - 60 BULK MATERIALS											BULK	
				CONTINUED LEG,0.156 IN.THK OF BOTH LEGS,10 FT TO 12 FT LG, FED QQ-A-200/11										
PA-FZ-Z	9540-261-5096	BAC1503-5814	81205	ALUMINUM ALLOY ANGLE.....	ABC	IN		*	*	*		*		
PA-FZ-Z	9540-261-5107		81348	ALUMINUM ALLOY ANGLE..... GR7075-T6,90 DEG,1 IN.H OF BOTH LEGS,0.094 IN.THK OF BOTH LEGS,10 FT TO 12 FT LG,FED QQ-A-200/11	ABC	IN		*	*	*		*		
PA-FZ-Z	9540-261-5117	AND10136-2006	99237	ALUMINUM ALLOY TEE..... FED QQ-A-200/11	ABC	IN		*	*	*		*		
PA-FZ-Z	9540-261-5614	AND10136-2002	81348	ALUMINUM ALLOY T-SECTION..... GR7075-T6,2 IN.W ACROSS TOP,1 IN.H,0.094 IN.THK, 10 FT TO 12 FT LG FED QQ-A-200/11	ABC	IN		*	*	*		*		
PA-FZ-Z	9540-287-9459	AND10136-2407QQA200-11T6	99237	ALUMINUM ALLOY T-SECTION..... GR7075-T6,2-1/2 IN.W ACROSS TOP,2 IN.H,1/8 IN.THK,10 FT TO 12 FT LG,FED QQ-A-200/11	ABC	IN		*	*	*		*		
C PA-FZ-Z	9540-078-6093	AND10134-1205	99237	ALUMINUM ALLOY ANGLE..... GR7075-T6,90 DEG,1 IN.H OF ONE LEG,1-1/4 IN.H OF OTHER LEG,0.094 IN.THK BOTH LEGS, 10 FT TO 12 FT LG,FED QQ-A-200/11	ABC	FT		*	*	*		*		
PA-FZ-Z	9540-299-0102	AND10134-1602	81348	ALUMINUM ALLOY ANGLE..... FED QQ-A-200/11	ABC	IN		*	*	*		*		
PA-FZ-Z	9540-402-0411	AND10136-1405	99237	ALUMINUM ALLOY T-SECTION..... GR7075-T6,1-1/2 IN.W ACROSS TOP,1-1/4 IN.H,0.078 IN. THK,10 FT TO 12 FT LG,FED QQ-A-250/11	ABC	IN		*	*	*		*		
PA-FZ-Z	9540-528-7277		81348	ALUMINUM ALLOY T-SECTION..... GR7075-T6,1.624 IN.W ACROSS TOP,0.875 IN.H,0.078 IN. THK,10 FT TO 12 FT LG,FED QQ-A-200/11	ABC	IN		*	*	*		*		
PA-FZ-Z	9540-528-7282		81348	ALUMINUM ALLOY T-SECTION..... GR7075-T6,2 IN.W ACROSS TOP,1.250 IN.H,0.078 IN. THK,10 FT TO 12 FT LG, FED QQ-A-200/11	ABC	IN		*	*	*		*		
PA-FZ-Z	9540-528-7299	AND10138-1004	99237	ALUMINUM ALLOY Z-SECTION..... GR7075-T6,1.624 IN.W ACROSS TOP,0.875 IN.H,0.078 IN. THK,10 FT TO 12 FT LG,FED QQ-A-200/11	ABC	IN		*	*	*		*		
PA-FZ-Z	9540-540-5941	AND10133-0701	99237	ALUMINUM ALLOY ANGLE EXTRUDED	ABC	IN		*	*	*		*		

	(1) SMR CODE	(2) FEDERAL STOCK NUMBER	(3) DESCRIPTION REFERENCE NUMBER & MFR CODE			USABLE ON CODE	(4) UNIT OF MEAS	(5) QTY INC IN UNIT	(6) 30-DAY DS/GS MAINT ALW (a) 1-20	(b) 21-50	(c) 51-100	(7) 1-YR ALWPER 100 EQUIP CNTGCY	(8) DEPOT MAINT ALWPER 100 EQUIP	(9) ILLUSTRATION (a) FIG NO	(b) ITEM NO
			FUNCTIONAL GROUP - 60	BULK MATERIALS		CH-47									
	PA-FZ-Z	9540-555-0816	AND10136-2008	81348	ALUMINUM ALLOY T-SECTION..... FED QQ-A-200/11	ABC	IN		*	*	*		*	BULK	
	PA-FZ-Z	9540-555-9658	AND10136-2405	99237	ALUMINUM ALLOY T-SECTION..... GR7075-T6,2-1/2 IN.W ACROSS TOP,1.625 IN.H,0.125 IN. THK,10 FT TO 12 FT LG, FED QQ-A-250/11	ABC	IN		*	*	*		*		
C	PA-FZ-Z	9540-580-6338	BAC1503-1491	81205	ALUMINUM ALLOY ANGLE.....	ABC	IN		*	*	*		*		
	PA-FZ-Z	9540-585-7205	AND10134-1401	99237	ALUMINUM ALLOY ANGLE..... GR7075-T6,90 DEG,3/4 IN.LG OF ONE LEG,1-1/2 IN.LG OF OTHER LEG,0.094 IN.THK OF BOTH LEGS,10 FT TO 12 FT LG,FED QQ-A-200/11	ABC	IN		*	*	*		*		
	PA-FZ-Z	9540-595-7155	AND10139-1106	99237	ALUMINUM ALLOY Z-SECTION..... GR7075-T6 1.125 IN.H,0.625 IN.W OF ONE LEG,1.125 IN.W OF OTHER LEG,0.063 IN.THK, 10 FT TO 12 FT LG, FED QQ-A-200/11	ABC	IN		*	*	*		*		
C	PA-FZ-Z	9540-052-7087	AND10134-1205QQA200-11T6FT	99237	ALUMINUM ALLOY ANGLE..... GR7075-T6,90 DEG,1 IN.H OF ONE LEG,1-1/4 IN.H OF OTHER LEG,0.094 IN.THK OF BOTH LEGS,10 FT TO 12 FT LG, FED QQ-A-200/11	ABC	IN		*	*	*		*		
	PA-FZ-Z	9540-596-2834	AND10135-1004	99237	ALUMINUM ALLOY ANGLE..... FED QQ-A-200/11	ABC	IN		*	*	*		*		
	PB-FZ-Z	9540-596-2955	AND10139-0505	99237	ALUMINUM ALLOY TEE..... FED QQ-A-200/11	ABC	IN		*	*	*		*		
	PA-FZ-Z	9540-596-3002	AND10134-0501	99237	ALUMINUM ALLOY ANGLE..... FED QQ-A-200/11	ABC	IN		*	*	*		*		
C	PA-FZ-Z	9540-596-3006	AND10134-1406QQ-A200-11T6	99237	ALUMINUM ALLOY ANGLE..... GR7075-T6,90 DEG,1-1/4 IN. H OF ONE LEG,1-1/2 IN.H OF OTHER LEG,0.094 IN.THK OF BOTH LEGS,10 FT TO 12 FT LG,FED QQ-A-200/11	ABC	IN		*	*	*		*		
	PA-FZ-Z	9540-640-4613	AND10136-1603	99237	ALUMINUM ALLOY T-SECTION..... FED QQ-A-200211	ABC	IN		*	*	*		*		
C	PB-FZ-Z	9540-720-0647		81348	STRUCTURAL ANGLE..... FED QQ-A-200/11	ABC	FT		*	*	*		*		
	PA-FZ-Z	9540-720-1338	AND10138-1005	99237	ALUMINUM ALLOY Z-SECTION..... GR7075-T6,1.00 IN.H,3/4 IN. W OF BOTH LEGS,0.078 IN. THK,12 FT LG,FED QQ-A-200/11	ABC	IN		*	*	*		*		
	PA-FZ-Z	9540-720-1347	AND10137-2601	99237	ALUMINUM ALLOY CHANNEL..... GR7075-T6,2.750 IN.W,1.00 IN.H,0.125 IN.THK,12 FT LG,	ABC	IN		*	*	*		*		

(1) SMR CODE	(2) FEDERAL STOCK NUMBER	(3) DESCRIPTION REFERENCE NUMBER & MFR CODE		USABLE ON CODE	(4) UNIT OF MEAS	(5) QTY INC IN UNIT	(6) 30-DAY DS/GS MAINT ALW (a) 1-20	(b) 21-50	(c) 51-100	(7) 1YR ALWPER 100 EQUIP CNTGCY	(8) DEPOT MAINT ALWPER 100 EQUIP	(9) ILLUSTRATION (a) FIG NO	(b) ITEM NO
		FUNCTIONAL GROUP - 60 BULK MATERIALS											
			CONTINUED									BULK	
			FED QQ-A-200/11										
XB-FZ-Z		77272	ALUMINUM ALLOY ANGLE..... GR7075-T6,90 DEG,0.700 IN.H OF BOTH LEGS,0.025 IN. THK OF BOTH LEGS	ABC	IN								
PA-FZ-Z	9540-928-7344	AND10138-2001	99237	ALUMINUM ALLOY Z-SECTION..... GR7075-T6,90 DEG,0.700 IN. LG OF BOTH LEGS,0.025 IN.THK OF BOTH LEGS FED QQ-A-200/11	ABC	IN		*	*	*		*		
PA-FZ-Z	9540-928-7369	AND10138-0709	99237	ALUMINUM ALLOY Z-SECTION..... EXTRUDED,GR7075-16,10 TO 12 FT LG,FED QQ-A-200/11	ABC	IN		*	*	*		*		
PA-FZ-Z	9540-928-7381	AND10138-0704	99237	ALUMINUM ALLOY Z-SECTION..... EXTRUDED,GR7075-T6,10 TO 12 FT LG,FED QQ-A-200/11	ABC	IN		*	*	*		*		
PB-FZ-Z	9540-939-8568	114S5707-19	77272	ALUMINUM ALLOY STRIP.....	ABC	EA		*	*	*		*		

(1) SMR CODE	(2) FEDERAL STOCK NUMBER	(3) DESCRIPTION REFERENCE NUMBER & MFR CODE			USABLE ON CODE	(4) UNIT OF MEAS	(5) QTY INC IN UNIT	(6) 30-DAY DS/GS MAINT ALW (a) 1-20	(b) 21-50	(c) 51-100	(7) 1 YR ALWPER 100 EQUIP CNTGCY	(8) DEPOT MAINT ALWPER 100 EQUIP	(9) ILLUSTRATION (a) FIG NO	(b) ITEM NO
		FUNCTIONAL GROUP - 70	MAINTENANCE SUPPLIES		CH-47									
PB-OZ-Z	1560-450-3622	RS69	32834	MAINTENANCE KIT,WINDSHIELD,... AIRCRAFT-C/O INSTRUCTIONS, 6 SHEETS OF CUSHIONED ABRASIVES,MESH GRADES 2400A,3200A,3600A,4000A, 6000A & 8000A,4 SHEETS OF STANDARD ABRASIVES,GRIT SIZE 400 & 600,1 OZ DETERGENT,1 OZ ANTI-STATIC CREAM,2 OZ TALCUM,5 WIPING CLOTHS & 3 RUBBING BLOCKS, 2 CARDBOARD,1 FOAM	ABC	KT		*	*	*		*	MSUP	
PA-FZ-Z	1560-620-4227	EAB10	81996	REPAIR KIT,PLEXIGLASS..... AIRCRAFT-C/O THE FOLLOWING, 3 SHEETS OF PLEXIGLASS,6 IN.W,12 IN.LG,0.060,0.125 & 0.250,1 QT ADHESIVE,2 CATALYST CAPSULES,1 ROLL 2 IN.W TAPE,18 IN.W,24 IN.LG OF WHITE FLANNELETTE CLOTH, SET OF ILLUSTRATED INSTRUCTIONS COMP	ABC	EA		*	*	*		*		
PB-OZ-Z	1560-624-0175	EAB20	81996	POLISHING KIT,PLEXIGLASS-C/O. 4 OZ POLISHING COMPOUND,4 OZ CLEANER,1 WIPING CLOTH,1 POLISHING CLOTH,1 PADDED RUBBING BLOCK & 1 PACKAGE OF TISSUES	ABC	EA		*	*	*		*		
PA-OZ-Z	1560-695-4909	1560EG006	81996	REPAIR KIT,PLEXIGLASS-C/O.... SPATULA,EYE DROPPER,TIN FOIL,MASKING TAPE & RESIN ACRYLIC	ABC	EA		*	*	*		*		
PA-FZ-Z	1560-856-9222	S1607-7021	78286	PARTS KIT,REINFORCED..... FIBERGLASS-C/O THE FOLLOWING,KIT CONTAINER, RESIN,ACTIVATOR,TAPE, STIRRING BLADE,SANDPAPER, FILLER MATERIAL,BRUSH,RAZOR BLADE & INSTRUCTIONS	ABC	EA		*	*	*		*		
R PA-FZ-Z	1560-437-0588	RK10-34	89616	REPAIR KIT,TANK,FUEL,AIRCRAFT FOR COLD TYPE REPAIRS,USED ON A COMBINATION SELF SEAL/BLADDER CELL CONSTRUCTION,C/O REPAIR PROCEDURE SHEET,12 EA 8 BY 16 IN.SHEETS OF INNER PATCH MATERIAL OF THE FOLLOWING TYPES,5200,5187 & 5194,2 EA 8 BY 16 IN.SHEETS OF BIASED LAMINATED OUTSIDE PATCH	ABC	EA		*	*	*		*		

(1) SMR CODE	(2) FEDERAL STOCK NUMBER	(3) DESCRIPTION REFERENCE NUMBER & MFR CODE		USABLE ON CODE CH-47	(4) UNIT OF MEAS	(5) QTY INC IN UNIT	(6) 30-DAY DS/GS MAINT ALW (a) 1-20	(b) 21-50	(c) 51-100	(7) 1-YR ALWPER 100 EQUIP CNTGCY	(8) DEPOT MAINT ALWPER 100 EQUIP	(9) ILLUSTRATION (a) FIG NO	(b) ITEM NO
		FUNCTIONAL GROUP - 70	MAINTENANCE SUPPLIES										
			CONTINUED MATERIAL OF THE FOLLOWING TYPES,5240 & 5241,FOUR 2 OZ TUBES OF EC678 CEMENT,FOUR 1/2 PT CANS SOLVENT,FOUR 1/2 IN.ACID BRUSHES,6 PIECES EMERY CLOTH,180 GRIT,4.5 BY 5.5 IN.,1/2 IN. STEEL ROLLER,2 YD CHEESECLOTH,1 PAIR 5 IN. SCISSORS									MSUP	
PA-FZ-Z	5330-171-6545	81348	CALKING LEAD-ROPE FORM,0.005. TO 0.015 IN.DIA RANGE OF STRAND,5/8 TO 3/4 IN.DIA, FED QQ-C-40,TYPE 2, GRADE AA,5 LB BAG	ABC	LB		*	*	*		*		
PA-OZ-Z	5350-050-1094	81349	GRAIN,ABRASIVE-BLACK WALNUT.. SHELL,MIL-G-5634,TYPE 3, 50 LB BAG	ABC	LB		*	*	*		*		
PA-OZ-Z	5350-161-9715	81348	CLOTH,ABRASIVE-ALUMINUM..... OXIDE,GRADE NO.240,9 IN.W, 11 IN.LG,USED FOR ABRADING METALS OF HIGH TENSILE STRENGTH,FED P-C-451,TYPE 1,CLASS 1,50 SHEETS	ABC	EA		*	*	*		*		
PA-OZ-Z	5350-174-0997 C320	70752	CLOTH,ABRASIVE-SILICON..... CARBIDE TYPE,OPEN MESH, CLOSED COATING,WATERPROOF, GRIT NO.320,9 IN.W,11 IN.LG,FED GGG-C-520,TYPE 2,CLASS 1,25 SHEETS PER BUNDLE	ABC	EA		*	*	*		*		
C PA-HZ-Z	5350-174-6460 ABRASIVEGRAIN	44197	GRAIN,ABRASIVE-ALUMINUM..... OXIDE,GRIT NO.220,25 LB DRUM	ABC	LB		*	*	*		*		
PA-OZ-Z	5350-192-5049	81348	CLOTH,ABRASIVE-ALUMINUM..... OXIDE,GRADE NO.120,9 IN.W, 11 IN.LG,USED FOR ABRADING METALS OF HIGH TENSILE STRENGTH,FED P-C-451,TYPE 1,CLASS 1,50 SHEETS	ABC	EA		*	*	*		*		
PA-OZ-Z	5350-192-5050	81348	CLOTH,ABRASIVE-ALUMINUM..... OXIDE,GRADE NO.150,9 IN.W, 11 IN.LG,USED FOR ABRADING METALS OF HIGH TENSILE STRENGTH,FED P-C-451,TYPE 1,CLASS 1,50 SHEETS	ABC	EA		*	*	*		*		
PA-OZ-Z	5350-221-0872	81348	CLOTH,ABRASIVE-FERRIC OXIDE & QUARTZ,CROCUS GRADE,9 IN.W, 11 IN.LG,FED P-C-458,CLASS	ABC	SH		*	*	*		*		

(1) SMR CODE	(2) FEDERAL STOCK NUMBER	(3) DESCRIPTION REFERENCE NUMBER & MFR CODE		USABLE ON CODE	(4) UNIT OF MEAS	(5) QTY INC IN UNIT	(6) 30-DAY DS GS MAINT ALW (a) 1-20	(b) 21-50	(c) 51-100	(7) 1 YR ALWPER BG EQUIP CNTGCY	(8) DEPOT MAINT ALWPER 100 EQUIP	(9) ILLUSTRATION (a) FIG NO	(b) ITEM NO
		FUNCTIONAL GROUP - 70	MAINTENANCE SUPPLIES	CH-47									
			CONTINUED										
			1,24 PER CARTON									MSUP	
PA-OZ-Z	5350-224-7201		81348 PAPER,ABRASIVE-SILICON..... CARBIDE,WATERPROOF,GRIT NO.400,9 IN.W,11 IN.LG, FED P-P-101,50 SHEETS	ABC	EA		*	*	*		*		
PA-OZ-Z	5350-224-7205		81348 PAPER,ABRASIVE-SILICON..... CARBIDE,WATERPROOF,GRIT NO.280,9 IN.W,11 IN.LG, FED P-P-101,50 SHEETS	ABC	SH		*	*	*		*		
PA-OZ-Z	5350-264-3489		81348 ABRASIVE PAPER ASSORTMENT.... C/O 20 SHEETS OF FLINT PAPER,5 GRADES RANGING FROM EXTRA FINE THRU EXTRA COARSE,FED P-P-105,CLASS 2	ABC	EA		*	*	*		*		
PA-OZ-Z	5350-286-4851		81349 WOOL,METALLIC-ALUMINUM OXIDE, MIL-A-4864,TYPE 2,1 LB ROLL	ABC	LB		*	*	*		*		
PA-OZ-Z	5350-721-8117		81348 PAPER,ABRASIVE-SILICON..... CARBIDE,WATERPROOF,GRIT NO. 180,9 IN.W,11 IN.LG,FED P-P-101,50 SHEETS	ABC	EA		*	*	*		*		
C PA-FZ-Z	5610-241-2785		81348 PLASTER,GYPSUM-KEENES CEMENT. TYPE,FED SS-C-161,TYPE 1, 100 LB BAG RPLS-- 5610-241-2786	ABC	LB		*	*	*		*		
PA-HZ-Z	5610-461-1173	PM501M1	00933 DECK COMPOUND BLACK-USE FOR.. REPAINTING ENGINE AREA WALKWAYS & HIGH TEMP AREAS, TYPE 2,1 GAL CAN	ABC	EA		*	*	*		*		
PC-OZ-Z	5610-641-0427		81349 WALKWAY COMPOUND,NONSLIP..... ROUGH TYPE,BLACK MIL-W-5044,TYPE 2,CLASS 1,1 GAL CAN	ABC	GL		*	*	*		*		
PA-OZ-Z	5610-857-4393		81349 FLIGHT DECK COMPOUND..... MIL-D-23003,TYPE 2,5 GAL PL	ABC	GL		*	*	*		*		
PC-FZ-Z	5970-161-7421	GLYPTAL1201-1PT	89954 INSULATING VARNISH,ELECTRICAL AIR OR BAKED DRYING,RED, MOISTURE,OIL & SALT WATER RESISTANT,1500 V,1 PT CAN	ABC	PT		*	*	*		*		
PC-OZ-Z	5970-285-0269		81349 INSULATING VARNISH,ELECTRICAL AIR DRYING,CLEAR,FUNGUS & MOISTURE RESISTANT,750 V, MIL-V-173,TYPE 2,5 GAL CAN	ABC	GL		*	*	*		*		
PC-OZ-Z	5970-285-0271		81349 INSULATING VARNISH,ELECTRICAL AIR DRYING,CLEAR,FUNGUS & MOISTURE RESISTANT,750 V, MIL-V-173,TYPE 2,1 GAL CAN	ABC	GL		*	*	*		*		
PC-OZ-Z	5970-548-9520	TUGON74S	72009 INSULATING VARNISH,ELECTRICAL AIR DRYING,CLEAR,FUNGUS &	ABC	QT		*	*	*		*		

	(1) SMR CODE	(2) FEDERAL STOCK NUMBER	(3) DESCRIPTION REFERENCE NUMBER & MFR CODE			USABLE ON CODE	(4) UNIT OF MEAS	(5) QTY INC IN UNIT	(6) 30-DAY DS/GS MAINT ALW (a) 1-20	(b) 21-50	(c) 51-100	(7) 1-YR ALWPER 100 EQUIP CNTGCY	(8) DEPOT MAINT ALWPER 100 EQUIP	(9) ILLUSTRATION (a) FIG NO	(b) ITEM NO
			FUNCTIONAL GROUP - 70 MAINTENANCE SUPPLIES			CH-47									
					CONTINUED MOISTURE RESISTANT,750 V, MIL-V-173,1 QT CAN PREPARATION FOR USE ON A4000 TYPE SILICONE ADHESIVE,1 QT CAN									MSUP	
N	PA-OZ-Z	6810-006-4206			ETHYLENE GLYCOL,TECHNICAL.... MIL-E-9500, 1 GAL CAN	ABC	GL		*	*	*		*		
	PC-FZ-Z	6810-141-6080	MS36031-2	96906	SODIUM PHOSPHATE,TRIBASIC,... ANHYDROUS,TECHNICAL-POWDER OR GRANULAR FORM,FED O-S-642,TYPE 1,100 LB SACK	ABC	LB		*	*	*		*		
	PC-DZ-Z	6810-143-2000	7100	37940	SODIUM DICHROMATE,DIHYDRATE,.. TECHNICAL-GRANULAR FORM, FED O-S-595,1 LB BOTTLE	ABC	LB						*		
	PA-OZ-Z	6810-184-4796		81348	ACETONE,TECHNICAL-FED..... O-A-51,5 GAL PAIL	ABC	GL		*	*	*		*		
	PA-HZ-Z	6810-184-4800		81348	TRICHLOROETHYLENE,TECHNICAL.. FED O-T-634,TYPE 2,55 GAL DRUM,18 GAGE	ABC	GL		*	*	*		*		
	PA-HZ-Z	6810-201-0907		81348	ALCOHOL,DENATURED-COLORLESS,.. FED O-E-760,GRADE 3,5 GAL CAN	ABC	GL		*	*	*		*		
	PA-FZ-Z	6810-222-2742		81348	N-BUTYL ACETATE,TECHNICAL.... LIQUID FORM,FED TT-B-838, 5 GAL CAN	ABC	GL		*	*	*		*		
	PA-FZ-Z	6810-222-9641	MS36043-3	96906	HYDROCHLORIC ACID,TECHNICAL.. FED O-H-765,5 PT BOTTLE	ABC	PT		*	*	*		*		
	PA-FZ-Z	6810-222-9643		81348	AMMONIUM HYDROXIDE,TECHNICAL. FED O-A-451,TYPE 1,5 PT BT	ABC	PT		*	*	*		*		
	PA-HZ-Z	6810-223-7612		81348	PHENOLPHTHALEIN,ACS-FED..... O-C-265,4 OZ BOTTLE	ABC	OZ		*	*	*		*		
	PA-OZ-Z	6810-223-9067		81348	NAPHTHA,AROMATIC-FED TT-N-97, TYPE 2,1 GAL CAN	ABC	GL		*	*	*		*		
	PA-FZ-Z	6810-234-8377	1-3891	70829	SODIUM SULFATE,ANHYDROUS,ACS. CRYSTAL FORM,FED O-C-265, 1 LB BOTTLE	ABC	LB		*	*	*		*		
	PA-FZ-Z	6810-237-2906		81348	SODIUM CARBONATE,ANHYDROUS,.. TECHNICAL-POWDER FORM,FED O-S-571,TYPE 1,300 LB FIBER DRUM	ABC	LB		*	*	*		*		
	PA-OZ-Z	6810-237-2918	MS36047-5	96906	NITRIC ACID,TECHNICAL-FED.... O-N-350,5 PT BOTTLE	ABC	PT		*	*	*		*		
	PA-OZ-Z	6810-238-8119		81348	NAPHTHA,ALIPHATIC-FED..... TT-N-95,TYPE 2,1 GAL CAN	ABC	GL		*	*	*		*		
C	PB-FZ-Z	6810-241-1131	MS36116-2	96906	CADMIUM NITRATE,TETRAHYDRATE, ANALYZED REAGENT-CRYSTAL FORM,4 OZ BOTTLE	ABC	OZ		*	*	*		*		
C															
C	PA-HZ-Z	6810-262-8574	MS36117-8	96906	CALCIUM FLUORIDE,ANALYZED.... REAGENT-POWDER FORM	ABC	OZ		*	*	*		*		

(1) SMR CODE	(2) FEDERAL STOCK NUMBER	(3) DESCRIPTION — REFERENCE NUMBER & MFR CODE		USABLE ON CODE	(4) UNIT OF MEAS	(5) QTY INC IN UNIT	(6) 30-DAY DS/GS MAINT ALW (a) 1-20	(b) 21-50	(c) 51-100	(7) 1 YR ALWPER 100 EQUIP CNTGCY	(8) DEPOT MAINT ALWPER 100 EQUIP	(9) ILLUSTRATION (a) FIG NO	(b) ITEM NO
		FUNCTIONAL GROUP - 70 MAINTENANCE SUPPLIES		CH-47									
			CONTINUED										
			4 OZ BOTTLE									MSUP	
PA-FZ-Z	6810-264-6517		81348 CHROMIUM TRIOXIDE,TECHNICAL.. FLAKE FORM,FED O-C-303, TYPE 2,5 LB CAN	ABC	LB		*	*	*		*		
PA-DZ-Z	6810-264-6525		81348 POTASSIUM DICHROMATE,..... TECHNICAL-CRYSTAL FORM,FED O-P-559,5 LB BOTTLE	ABC	LB						*		
PA-OZ-Z	6810-264-6548		81348 GLYCEROL,TECHNICAL-LIQUID.... FORM,FED O-G-491,1 GAL CAN	ABC	GL		*	*	*		*		
PA-OZ-Z	6810-264-6618		81348 SODIUM BICARBONATE,TECHNICAL. FED O-S-576,1 LB CARTON	ABC	LB		*	*	*		*		
PC-OZ-Z	6810-264-6715	MOLYKOTETYPEZ	94499 MOLYBDENUM DISULFIDE,..... TECHNICAL-POWDER FORM, MIL-M-7866,1 LB CAN	ABC	LB		*	*	*		*		
PC-FZ-Z	6810-270-8177	MS36037-3	96906 SODIUM HYDROXIDE,TECHNICAL... FLAKE OR POWDER FORM,FED O-S-598,TYPE 1,13 OZ CAN	ABC	OZ		*	*	*		*		
PA-OZ-Z	6810-270-9982		81348 TETRACHLOROETHYLENE,..... TECHNICAL-FED O-T-236, 55 GAL DRUM	ABC	GL		*	*	*		*		
PA-FZ-Z	6810-270-9984		81349 SODIUM BISULFATE,ANHYDROUS,.. TECHNICAL-GLOBULAR FORM, MIL-S-16917,TYPE 1,100 LB DRUM	ABC	LB		*	*	*		*		
PA-FZ-Z	6810-281-2001		81348 ETHYLENE GLYCOL MONOBUTYL.... ETHER,TECHNICAL-LIQUID FORM,INTENDED FOR USE IN ORGANIC COATING,FED TT-E-776,1 GAL PER CAN	ABC	GL		*	*	*		*		
PA-OZ-Z	6810-281-2002	9060184	18876 TOLUENE,TECHNICAL-FED..... TT-T-548,1 GAL CAN	ABC	GL		*	*	*		*		
PA-DZ-Z	6810-281-2761		81348 METHYL ISOBUTYL KETONE,..... TECHNICAL-LIQUID FORM, FED TT-M-268,55 GAL DRUM	ABC	GL						*		
PA-FZ-Z	6810-281-2785	MEK	86144 METHYL ETHYL KETONE,..... TECHNICAL-FED TT-M-261, 1 GAL CAN	ABC	GL		*	*	*		*		
PA-FZ-Z	6810-281-5272		81348 BENZENE,TECHNICAL-LIQUID..... FORM,FED VV-B-231,GRADE A, 1 GAL CAN	ABC	GL		*	*	*		*		
PA-FZ-Z	6810-286-3785		81348 METHYL ISOBUTYL KETONE,..... TECHNICAL-FED TT-M-268,1 GAL CAN	ABC	EA		*	*	*		*		
PA-DZ-Z	6810-290-0048	809850	19203 TOLUENE,TECHNICAL-LIQUID..... FORM,FED TT-T-548,5 GAL PL	ABC	GL						*		
PC-FZ-Z	6810-290-0051		81349 NAPHTHA,COMPASS-MIL-C-5020,.. 1 QT CAN	ABC	QT		*	*	*		*		
PA-FZ-Z	6810-543-4012		81348 HYDROFLUORIC ACID,TECHNICAL.. FED O-H-795,1 GAL	ABC	GL		*	*	*		*		

	(1) SMR CODE	(2) FEDERAL STOCK NUMBER	(3) DESCRIPTION REFERENCE NUMBER & MFR CODE			USABLE ON CODE	(4) UNIT OF MEAS	(5) QTY INC IN UNIT	(6) 30-DAY DS/GS MAINT ALW (a) 1-20	(b) 21-50	(c) 51-100	(7) 1 YR ALWPER 100 EQUIP CNTGCY	(8) DEPOT MAINT ALWPER 100 EQUIP	(9) ILLUSTRATION (a) FIG NO	(b) ITEM NO
			FUNCTIONAL GROUP - 70 MAINTENANCE SUPPLIES			CH-47									
					CONTINUED									MSUP	
					POLYETHYLENE BOTTLE										
	PA-OZ-Z	6810-543-4041		81348	POTASSIUM HYDROXIDE SOLUTION. FED O-C-265,500 CC POLYETHYLENE BOTTLE	ABC	CC		*	*	*		*		
	PA-DZ-Z	6810-584-4070	809847	19203	XYLENE,TECHNICAL-LIQUID FORM, FED TT-X-916,GRADE B,5 GAL CAN	ABC	GL						*		
	PA-OZ-Z	6810-598-6600		81348	XYLENE,TECHNICAL-LIQUID FORM, FED TT-X-916,GRADE B, 1 GAL CAN	ABC	GL		*	*	*		*		
	PA-DZ-Z	6810-628-3383		81349	ALUMINUM,TECHNICAL-POWDER.... FORM,MIL-A-512,TYPE 2,GRADE E,CLASS 6,100 LB DRUM	ABC	LB						*		
	PA-OZ-Z	6810-664-0387	801032	18876	1,1,1-TRICHLOROETHANE,..... TECHNICAL-LIQUID FORM,FED O-T-620,TYPE 1,1 GAL CAN	ABC	GL		*	*	*		*		
	PA-OZ-Z	6810-819-1128		81348	TETRACHLOROETHYLENE,TECHNICAL FED O-T-236,5 GAL PAIL	ABC	GL		*	*	*		*		
	PA-HZ-Z	6810-855-6160		81348	ISOPROPYL ALCOHOL,TECHNICAL.. FED TT-I-735,GRADE B,5 GAL CAN	ABC	GL		*	*	*		*		
	PA-OZ-Z	6810-893-8138	MS36053-6	96906	SULFURIC ACID,ELECTROLYTE.... FED O-S-801,CLASS 3,15 GAL POLYETHYLENE DRUM	ABC	GL		*	*	*		*		
N	PA-FZ-Z	6820-001-4192		81349	DYE,LEAK DETECTION,AIRCRAFT.. FUEL SYSTEM-LIQUID OIL SOLUBLE,ORGANIC,RED, MIL-D-81298,TYPE 1,1 GAL CN	ABC	GL		*	*	*		*		
N	PA-FZ-Z	6820-412-2296		81349	DYE,LEAK DETECTION,AIRCRAFT.. FUEL SYSTEM-LIQUID OIL SOLUBLE,ORGANIC,YELLOW, MIL-D-81298,TYPE 2,1 GAL CN	ABC	GL		*	*	*		*		
N	PA-FZ-Z	6820-926-8887		81349	DYE,LEAK DETECTION,AIRCRAFT.. FUEL SYSTEM-LIQUID OIL SOLUBLE,ORGANIC,RED, MIL-D-81298,TYPE 1,2 OZ BT	ABC	OZ		*	*	*		*		
	PA-DZ-Z	6830-264-6755		81348	ACETYLENE,TECHNICAL-FED..... BB-A-106,GRADE B,1728 CI CU FT	ABC	CI						*		
	PA-OZ-Z	6830-292-0131		81348	NITROGEN,TECHNICAL-OIL FREE,.. FED BB-N-411,TYPE 1,CLASS 1,GRADE B,200 CU FT CYLINDER	ABC	CF		*	*	*		*		
	PA-HZ-Z	6830-880-1838	AFPIDNO6830-1	80049	HELIUM-NITROGEN,220-240 CU FT CYLINDER	ABC	CF		*	*	*		*		
	PC-OZ-Z	6840-721-6055		81348	DEODORANT,GENERAL PURPOSE.... FED P-D-00200,SIZE 2, 16 OZ SPRAY CAN	ABC	OZ		*	*	*		*		
C	PA-OZ-Z	6850-139-5297	REPCON	50159	RAIN REPELLANT,WINDSHIELD....	ABC	KT		*	*	*		*		

(1) SMR CODE	(2) FEDERAL STOCK NUMBER	(3) DESCRIPTION REFERENCE NUMBER & MFR CODE		USABLE ON CODE	(4) UNIT OF MEAS	(5) QTY INC IN UNIT	(6) 30-DAY DS/GS MAINT ALW (a) 1-20	(b) 21-50	(c) 51-100	(7) 1-YR ALWPER 1/3 EQUIP CNTGCY	(8) DEPOT MAINT ALWPER 1/3 EQUIP	(9) ILLUSTRATION (a) FIG NO	(b) ITEM NO
		FUNCTIONAL GROUP - 70	MAINTENANCE SUPPLIES	CH-47									
			CONTINUED									MSUP	
			TRANSPARENT LIQUID,USE FOR WINDSHIELDS,WINDOWS & CANOPIES,8 OZ BOTTLE										
C PA-OZ-Z	6850-142-9582	81349	CORROSION PREVENTIVE,AIRCRAFT ENGINE-COMPATIBLE ENGINE LUBRICATING OIL PER SPEC MIL-L-23699,W/1 IN.SCREW CAP,8 OZ CAN	ABC	OZ		*	*	*		*		
PA-OZ-Z	6850-144-9816	81349	CLEANING COMPOUND,AIRCRAFT... SURFACE-LIQUID FORM, MIL-C-0043616,CLASS 2, 5 GAL PAIL	ABC	GL		*	*	*		*		
PA-FZ-Z	6850-174-9672	81349	CORROSION REMOVING COMPOUND.. LIQUID FORM,MIL-C-10578, TYPE 2,1 GAL BOTTLE	ABC	GL		*	*	*		*		
N PA-FZ-Z	6850-181-7933	81348	ANTIFREEZE-PERMANENT TYPE,... 300DEG F BP,PROTECTION TO MINUS 60 DEG F,FED O-A-548, TYPE 1,5 GAL CAN	ABC	GL		*	*	*		*		
PA-OZ-Z	6850-209-7234	81349	CORROSION PREVENTIVE,AIRCRAFT ENGINE-COMPATIBLE ENGINE LUBRICATING OIL PER SPEC MIL-L-6082,GRADE 1100, MIL-C-6529,TYPE 2,55 GAL DRUM,18 GAGE	ABC	GL		*	*	*		*		
C PA-OZ-Z	6850-224-6658	81349	CLEANING COMPOUND,RIFLE BORE. SOLUTION TYPE,MIL-C-372, 1 QT CAN	ABC	PT		*	*	*		*		
PA-FZ-Z	6850-242-4728	9C 37676	MAGNETIC INSPECTION POWDER... RED,10 LB PAIL	ABC	LB		*	*	*		*		
PA-DZ-Z	6850-256-0157	81348	CLEANING COMPOUND-FED..... P-C-437,125 LB DRUM	ABC	LB						*		
PA-OZ-Z	6850-264-6571	8790672 19203	DESICCANT,ACTIVATED..... MIL-D-3464,TYPE 1,300 BAGS, 8 UNITS PER BAG,200 LB DR	ABC	EA		*	*	*		*		
PA-OZ-Z	6850-264-6572	8790670-1 19203	DESICCANT,ACTIVATED..... MIL-D-3464,TYPE 1,150 BAGS, 16 UNITS PER BAG,200 LB DR	ABC	EA		*	*	*		*		
PB-DZ-Z	6850-264-6573	8790674 19203	DESICCANT,ACTIVATED..... MIL-D-3464,TYPE 1,150 BAGS, 2 UNITS PER BAG,5 GAL PAIL	ABC	EA						*		
PA-OZ-Z	6850-264-9037	81348	DRY CLEANING SOLVENT-LIQUID.. FORM,FOR DRY CLEANING TEXTILE MATERIALS,FED P-D-680,TYPE 1,55 GAL DRUM, 16 GAGE	ABC	GL		*	*	*		*		
PA-OZ-Z	6850-264-9038	81348	DRY CLEANING SOLVENT-LIQUID.. FORM,FOR DRY CLEANING TEXTILE MATERIALS,FED	ABC	GL		*	*	*		*		

(1) SMR CODE	(2) FEDERAL STOCK NUMBER	(3) DESCRIPTION REFERENCE NUMBER & MFR CODE		USABLE ON CODE CH-47	(4) UNIT OF MEAS	(5) QTY INC IN UNIT	(6) 30-DAY DS/GS MAINT ALW (a) 1-20	(b) 21-50	(c) 51-100	(7) 1-YR ALWPER 100 EQUIP CNTGCY	(8) DEPOT MAINT ALWPER 100 EQUIP	(9) ILLUSTRATION (a) FIG NO	(b) ITEM NO
		FUNCTIONAL GROUP - 70	MAINTENANCE SUPPLIES										
			CONTINUED									MSUP	
			P-D-680,TYPE 1,5 GAL PAIL										
PA-FZ-Z	6850-273-2395	81349	CORROSION PREVENTIVE,AIRCRAFT ENGINE-COMPATIBLE ENGINE LUBRICATING OIL PER SPEC MIL-L-7808,MIL-C-8188, GRADE A,5 GAL PAIL	ABC	GL		*	*	*		*		
PA-FZ-Z	6850-282-6770	81349	CLEANING COMPOUND,ALUMINUM... SURFACE-CONCENTRATED, MIL-C-5410,TYPE 2,5 GAL PL	ABC	GL		*	*	*		*		
PB-FZ-Z	6850-285-8011	81348	DRY CLEANING SOLVENT-LIQUID.. FORM,FOR DRY CLEANING TEXTILE MATERIALS,FED P-D-680,TYPE 2,55 GAL DRUM, 18 GAGE	ABC	GL		*	*	*		*		
PA-OZ-Z	6850-341-8430	2911C1728S 99171	WATER REPELLENT KIT..... MIL-R-6882	ABC	EA		*	*	*		*		
PA-HZ-Z	6850-550-5565	81349	CORROSION REMOVING COMPOUND.. GRANULAR OR FLAKE FORM, MIL-C-14460,TYPE 1,400 LB DRUM	ABC	LB		*	*	*		*		
PA-FZ-Z	6850-551-3694	SURJEX 95510	CLEANING COMPOUND,SOLVENT.... FOR CLEANING OIL COOLERS, MIL-C-6864,55 GAL DRUM	ABC	GL		*	*	*		*		
PA-FZ-Z	6850-558-1248	81349	ANTI-ICING FLUID..... MIL-A-8243,55 GAL DRUM	ABC	GL		*	*	*		*		
PA-DZ-Z	6850-597-1528	CLARCOJEC 91608	CLEANING COMPOUND,ALKALI,.... FERROUS SURFACE-LIQUID FORM,MIL-D-26549,55 GAL DRUM,16 GAGE	ABC	GL						*		
PB-OZ-Z	6850-621-1820	81349	LEAK TEST COMPOUND-LIQUID.... FORM,MIL-L-25567,TYPE 1, 4 OZ BOTTLE	ABC	OZ		*	*	*		*		
PA-FZ-Z	6850-664-9067	DYKEMSTEELBLUE 98148	LAYOUT DYE-BLUE,1 PT CAN.....	ABC	PT		*	*	*		*		
PA-HZ-Z	6850-702-8451	81349	CARBON REMOVING COMPOUND-DIP. TYPE,REQUIRES RINSING, MIL-C-19853,TYPE 1,1 GAL CN	ABC	GL		*	*	*		*		
N PA-FZ-Z	6850-782-2726	81349	INSPECTION PENETRANT..... DEVELOPER,DRY-USED W/NONFLUORESCENT, MIL-I-25135,GROUP 2,30 LB FIBER DRUM	ABC	LB		*	*	*		*		
PA-FZ-Z	6850-803-6420	81349	CARBON REMOVING COMPOUND-DIP. TYPE,HOT WATER & KEROSENE RINSING REQUIRED, MIL-C-25107,5 GAL PAIL	ABC	GL		*	*	*		*		
PC-FZ-Z	6850-826-0981	81349	INSPECTION PENETRANT KIT-BOX, C/O 9 12 OZ AEROSOL CANS OF THE FOLLOWING,1 CAN	ABC	KT		*	*	*		*		

(1) SMR CODE	(2) FEDERAL STOCK NUMBER	(3) DESCRIPTION REFERENCE NUMBER & MFR CODE		USABLE ON CODE	(4) UNIT OF MEAS	(5) QTY INC IN UNIT	(6) 30-DAY DS/GS MAINT ALW (a) 1-20	(b) 21-50	(c) 51-100	(7) 1 YR ALWPER 100 EQUIP CNTGCY	(8) DEPOT MAINT ALWPER 100 EQUIP	(9) ILLUSTRATION (a) FIG NO	(b) ITEM NO
		FUNCTIONAL GROUP - 70 MAINTENANCE SUPPLIES		CH-47									
			CONTINUED									MSUP	
			PENETRANT,4 CANS PENETRANT REMOVER,4 CANS DEVELOPER, MIL-I-25135,GROUP 1,KT										
PB-OZ-Z	6850-854-7952	81349	CORROSION REMOVING COMPOUND.. LIQUID FORM,MIL-C-10578, TYPE 3,5 GAL DRUM	ABC	GL		*	*	*		*		
PA-OZ-Z	6850-901-0591	81349	ANTI-ICING FLUID-MIL-A-8243,. 5 GAL CAN	ABC	GL		*	*	*		*		
PA-FZ-Z	6850-927-9461 340	71984	SILICONE COMPOUND-METAL..... OXIDE,5 OZ TUBE	ABC	OZ		*	*	*		*		
C PA-FZ-Z	6850-935-0995	81349	CLEANING COMPOUND,AIRCRAFT... SURFACE-LIQUID FORM, MIL-C-25769,55 GAL DRUM OBSLTS 6850-577-4240	ABC	GL		*	*	*		*		
PA-FZ-Z	6850-965-2332	81348	CARBON REMOVING COMPOUND..... DIP TYPE,SINGLE PHASE LIQUID,RINSING REQUIRED W/WATER,KEROSENE OR DRY CLEANING SOLVENT, FED P-C-111,5 GAL PAIL	ABC	GL		*	*	*		*		
PC-OZ-Z	7510-161-0813 805600	18876	INK,MARKING STENCIL-BLACK,... FOR POROUS SURFACE, FED TT-I-559,1 QT CAN	ABC	QT		*	*	*		*		
PC-OZ-Z	7520-973-1059 MARKSALOTBLACK	71328	MARKER,TUBE TYPE-FELT TIP,... BLACK,FED GG-M-00114	ABC	EA		*	*	*		*		
PA-HZ-Z	7920-205-1711	81348	RAG,WIPING-COTTON,FOR GENERAL PURPOSE USE,FED DDD-R-30, CLASS 2,GRADE B,50 LB BALE	ABC	LB		*	*	*		*		
PA-OZ-Z	7920-823-9772 DW61-1000-22	95135	TOWEL,PAPER-SHEET FORM,..... 13-1/3 IN.W,293-5/16 SQ IN. AREA,100 SHEETS BANDED, FED UU-T-00595,TYPE 3, SIZE L,10 PKG PER CASE	ABC	EA		*	*	*		*		
PC-OZ-Z	7930-267-5588	81349	WAX,AIRCRAFT-LIQUID FORM,.... MIL-W-18723,1 GAL CAN	ABC	GL		*	*	*		*		
PC-OZ-Z	7930-634-5340 4030	77247	POLISH,PLASTIC-LIQUID FORM,.. ANTISTATIC,REMOVES MASKING GLUE,LUBRICATING GREASE & OIL,MIL-C-18767,TYPE 1,1 PT BOTTLE	ABC	PT		*	*	*		*		
PC-FZ-Z	7930-891-7551 7930J0-021	44389	CLEANING COMPOUND,SOLVENT.... DETERGENT,POWDER FORM, UNSUITABLE FOR USE ON ASPHALT SURFACES,USED W/WATER FOR CLEANING OIL COATED FLOORS,PAINTED EQUIPMENT & COOLING SYSTEMS,150 LB DRUM	ABC	LB		*	*	*		*		
PA-DZ-Z	7930-965-2330	81349	CLEANING COMPOUND,SOLVENT....	ABC	LB						*		

(1) SMR CODE	(2) FEDERAL STOCK NUMBER	(3) DESCRIPTION REFERENCE NUMBER & MFR CODE			USABLE ON CODE	(4) UNIT OF MEAS	(5) QTY INC IN UNIT	(6) 30-DAY DS/GS MAINT ALW (a) 1-20	(b) 21-50	(c) 51-100	(7) 1-YR ALWPER 100 EQUIP CNTGCY	(8) DEPOT MAINT ALWPER 100 EQUIP	(9) ILLUSTRATION (a) FIG NO	(b) ITEM NO
		FUNCTIONAL GROUP - 70	MAINTENANCE SUPPLIES		CH-47								MSUP	
				CONTINUED DETERGENT POWDER OR GRANULAR FORM,MIL-C-5543, 150 LB BARREL										
PA-FZ-Z	7930-999-2417	DIRLLUMN0603	99251	CLEANER,DETERGENT-1 LB.....	ABC	OZ		*	*	*		*		
PB-FZ-Z	8010-060-3253	CABOSILGDM5-10L8BG	80798	PIGMENT,PULVERIZED SILICA.... USED AS PAINT EXTENDER	ABC	LB		*	*	*		*		
PC-OZ-Z	8010-082-2421		81349	COATING COMPOUND,FLUORESCENT. RED-ORANGE,USED FOR PROVIDING HIGH VISIBILITY FINISH,READILY REMOVABLE W/O IMPAIRING THE UNDERLYING PERMANENT PROTECTIVE FINISH, MIL-P-21600,1 GAL CAN	ABC	GL		*	*	*		*		
PC-FZ-Z	8010-082-2479		81349	LACQUER-ACRYLIC..... NITROCELLULOSE TYPE,OLIVE DRAB,LUSTERLESS,USED AS A GENERAL PURPOSE EXTERIOR PROTECTIVE COATING FOR METAL SURFACES,LUBRICATING OIL RESISTANT,MIL-L-19538, 1 QT CAN	ABC	QT		*	*	*		*		
XB-FZ-Z		EPOLUX100E6	93981	ENAMEL-BLACK,FULL GLOSS,FOR.. EXTERIOR USE,1 QT CAN	ABC	QT								
PB-DZ-Z	8010-112-9478		81349	EPOXY PRIMER COATING KIT..... COLORLESS,LUSTERLESS,USE FOR A SEALANT APPLIED TO MAGNESIUM ALLOY CASTINGS, MIL-C-46079,1 GAL CAN	ABC	GL						*		
PC-OZ-Z	8010-141-2952		81348	LACQUER-RED,FULL GLOSS,..... FED TT-L-50,TYPE 1 OR 2,1 PT PRESSURIZED CAN	ABC	PT		*	*	*		*		
PC-OZ-Z	8010-141-2958		81348	LACQUER-GRAY,FULL GLOSS,FED.. TT-L-50,TYPE 1 OR 2,1 PT PRESSURIZED CAN	ABC	PT		*	*	*		*		
C PC-HZ-Z	8010-159-4449		54636	REMOVER,PAINT-ORGANIC SOLVENT TYPE,LIQUID FORM,P/N A81K3, 1 QT CAN	ABC	PT		*	*	*		*		
PC-OZ-Z	8010-160-5787	MS35626-2	96906	THINNER,DOPE AND LACQUER-FOR. CELLULOSE NITRATE BASE ITEMS,FED TT-T-266,1 GAL CN	ABC	GL		*	*	*		*		
PC-FZ-Z	8010-160-5788		81348	THINNER,DOPE AND LACQUER-FOR. CELLULOSE NITRATE BASE ITEMS,FED TT-T-266,5 GAL PL	ABC	GL		*	*	*		*		
PC-FZ-Z	8010-161-7370		81348	LACQUER-CELLULOSIC DERIVATIVE TYPE,INTERNATIONAL ORANGE, FULL GLOSS,FED TT-L-32,TYPE 2,1/2 PT CAN	ABC	PT		*	*	*		*		
PC-OZ-Z	8010-162-5289	MS35625-1	96906	THINNER,DOPE AND LACQUER-FOR.	ABC	GL		*	*	*		*		

(1) SMR CODE	(2) FEDERAL STOCK NUMBER	(3) DESCRIPTION REFERENCE NUMBER & MFR CODE		USABLE ON CODE	(4) UNIT OF MEAS	(5) QTY INC IN UNIT	(6) 30-DAY DS/GS MAINT ALW (a) 1-20	(b) 21-50	(c) 51-100	(7) 1-YR ALWPER 100 EQUIP CNTGCY	(8) DEPOT MAINT ALWPER 100 EQUIP	(9) ILLUSTRATION (a) FIG NO	(b) ITEM NO
		FUNCTIONAL GROUP - 70 MAINTENANCE SUPPLIES		CH-47									
		CONTINUED										MSUP	
		CELLULOSE NITRATE BASE ITEMS,BLUSH RETARDANT, MIL-T-6095,1 GAL CAN											
PC-FZ-Z	8010-165-4782		81348 DRIER,PAINT-COBALT..... NAPHTHENATE BASE,LIQUID FORM,FED TT-D-643,TYPE 2, 1 QT CAN	ABC	QT		*	*	*		*		
PC-FZ-Z	8010-166-3147	MS35542-1	96906 LACQUER-CELLULOSIC DERIVATIVE TYPE,JET BLACK,LUSTERLESS, FOR USE ON PRIMED METAL SURFACES AS A CAMOUFLAGE FINISH,FED TT-L-20,1 QT CAN	ABC	QT		*	*	*		*		
PC-OZ-Z	8010-166-3152	MS35542-7	96906 LACQUER-CELLULOSIC DERIVATIVE TYPE,WHITE,LUSTERLESS,FOR USE ON PRIMED METAL SURFACES AS A CAMOUFLAGE FINISH,FED TT-L-20,1 QT CAN	ABC	QT		*	*	*		*		
PC-FZ-Z	8010-166-3158	MS35542-8	96906 LACQUER-CELLULOSIC DERIVATIVE TYPE,ORANGE YELLOW, LUSTERLESS,FOR USE ON PRIMED METAL SURFACES AS A CAMOUFLAGE FINISH, FED TT-L-20,1 QT CAN	ABC	QT		*	*	*		*		
PC-OZ-Z	8010-166-3164		81348 LACQUER-CELLULOSIC DERIVATIVE TYPE,COLORLESS,FULL GLOSS, USED FOR EXTERIOR PROTECTIVE COATING FOR METAL,FED TT-L-32,TYPE 2, 1 QT CAN	ABC	QT		*	*	*		*		
PC-OZ-Z	8010-168-8812		81349 DOPE-CELLULOSE NITRATE BASE.. CLEAR,MIL-D-5553,1 GAL CAN	ABC	GL		*	*	*		*		
PC-OZ-Z	8010-241-8406		81348 LACQUER-CELLULOSIC DERIVATIVE TYPE,ALUMINUM,FULL GLOSS, USED FOR EXTERIOR PROTECTIVE COATING FOR METAL,FED TT-L-32,TYPE 2,1 GAL CAN	ABC	GL		*	*	*		*		
PC-FZ-Z	8010-242-2089	814368	18876 THINNER,PAINT,MINERAL SPIRITS FED TT-T-291,GRADE 1,1 GAL CAN	ABC	GL		*	*	*		*		
PC-FZ-Z	8010-243-9767	MS35542-4	96906 LACQUER-CELLULOSIC DERIVATIVE TYPE,LIGHT GULL GRAY, LUSTERLESS,FOR USE ON PRIMED METAL SURFACES AS A CAMOUFLAGE FINISH,FED TT-L-20,1 GAL CAN	ABC	GL		*	*	*		*		
PC-OZ-Z	8010-246-6116		81348 THINNER,PAINT,MINERAL SPIRITS FED TT-T-291,GRADE 1,55 GAL DRUM,18 GAGE	ABC	GL						*		
PC-OZ-Z	8010-246-6443		81348 TURPENTINE-GUM SPIRITS CR....	ABC	GL		*	*	*		*		

(1) SMR CODE	(2) FEDERAL STOCK NUMBER	(3) DESCRIPTION REFERENCE NUMBER & MFR CODE		USABLE ON CODE CH-47	(4) UNIT OF MEAS	(5) QTY INC IN UNIT	(6) 30-DAY DS/GS MAINT ALW (a) 1-20	(b) 21-50	(c) 51-100	(7) 1-YR ALWPER 100 EQUIP CNTGCY	(8) DEPOT MAINT ALWPER 100 EQUIP	(9) ILLUSTRATION (a) FIG NO	(b) ITEM NO
		FUNCTIONAL GROUP - 70	MAINTENANCE SUPPLIES										
			CONTINUED									MSUP	
			STEAM DISTILLED WOOD, FED TT-T-801,TYPE 1,CLASS A OR B,1 GAL CAN										
PC-DZ-Z	8010-246-6445	81348	TURPENTINE-GUM SPIRITS OR.... STEAM DISTILLED WOOD, FED TT-T-801,TYPE 1,CLASS A OR B,55 GAL DRUM	ABC	GL						*		
PC-FZ-Z	8010-248-2838	MS35550-10 96906	LACQUER-CELLULOSIC DERIVATIVE TYPE,ORANGE YELLOW,FULL GLOSS,USED FOR EXTERIOR PROTECTIVE COATING FOR METAL,FED TT-L-32,TYPE 2, 1 QT CAN	ABC	QT		*	*	*		*		
PC-OZ-Z	8010-251-6501	81348	LACQUER-CELLULOSIC DERIVATIVE TYPE,INTERNATIONAL ORANGE, FULL GLOSS,USED FOR EXTERIOR PROTECTIVE COATING FOR METAL,FED TT-L-32,TYPE 2,1 GAL CAN	ABC	GL		*	*	*		*		
PC-FZ-Z	8010-257-5377	MS35550-7 96906	LACQUER-CELLULOSIC DERIVATIVE TYPE,INSIGNIA WHITE,FULL GLOSS,USED FOR EXTERIOR PROTECTIVE COATING FOR METAL,FED TT-L-32,TYPE 2, 1 QT CAN	ABC	QT		*	*	*		*		
PC-FZ-Z	8010-257-5378	UL11037-1QT 47695	LACQUER-CELLULOSIC DERIVATIVE TYPE,JET BLACK,FULL GLOSS, USED FOR EXTERIOR PROTECTIVE COATING FOR METAL,FED TT-L-32,TYPE 2, 1 QT CAN	ABC	QT		*	*	*		*		
PC-OZ-Z	8010-257-5379	81348	LACQUER-CELLULOSIC DERIVATIVE TYPE,DEEP GRAY,FULL GLOSS, USED FOR EXTERIOR PROTECTIVE COATING FOR METAL,FED TT-L-32,TYPE 2, 1 QT CAN	ABC	QT		*	*	*		*		
PC-OZ-Z	8010-262-9172	81348	FILLER,WOOD,PLASTIC-NATURAL,. PASTE FORM,FOR USE W/ACETONE SOLVENT, FED TT-F-340,1 LB CAN	ABC	LB		*	*	*		*		
PC-FZ-Z	8010-286-7758	MS35522-4 96906	ENAMEL-ORANGE YELLOW,FULL.... GLOSS,FED TT-E-489,CLASS A, 1 QT CAN	ABC	QT		*	*	*		*		
PC-OZ-Z	8010-290-4302	81349	VARNISH,OIL-LIQUID FORM,..... MIL-V-6093,1 PT CAN	ABC	PT		*	*	*		*		
PC-OZ-Z	8010-290-6158	81348	LACQUER-CELLULOSIC DERIVATIVE OR VINYL RESIN TYPE,BLACK, FULL GLOSS,USED ON THE	ABC	GL		*	*	*		*		

(1) SMR CODE	(2) FEDERAL STOCK NUMBER	(3) DESCRIPTION REFERENCE NUMBER & MFR CODE		USABLE ON CODE	(4) UNIT OF MEAS	(5) QTY INC IN UNIT	(6) 30-DAY DS/GS MAINT ALW (a) 1-20	(b) 21-50	(c) 51-100	(7) 1-YR ALWPER 100 EQUIP CNTGCY	(8) DEPOT MAINT ALWPER 100 EQUIP	(9) ILLUSTRATION (a) FIG NO	(b) ITEM NO
		FUNCTIONAL GROUP - 70	MAINTENANCE SUPPLIES	CH-47									
			CONTINUED										
			ALUMINUM SURFACES,FED TT-L-54,1 GAL CAN									MSUP	
PC-OZ-Z	8010-290-6984	81348	LACQUER-NITROCELLULOSE,JET... BLACK,FULL GLOSS,USED AS A FINISH FOR GENERAL PURPOSE COATING,FED TT-L-50,TYPE 1, 1 PT PRESSURIZED CAN	ABC	PT		*	*	*		*		
PC-OZ-Z	8010-297-0593	1319 87187	PRIMER COATING-YELLOW,USED AS A CORROSION-INHIBITING PRIMER ON ACFT METAL SURFACES EITHER ALONE OR TOPCOATED W/LACQUER OR ENAMEL,MIL-P-8585,16 OZ AEROSOL CAN	ABC	PT		*	*	*		*		
PC-DZ-Z	8010-515-0800	MS35727-21 96906	ENAMEL-LIGHT GULL GRAY,..... LUSTERLESS,USE ON METAL PARTS & SURFACES OVER ZINC CHROMATE PRIMER AS A CAMOUFLAGE FINISH, FED TT-E-527,1 GAL CAN	ABC	GL						*		
PC-FZ-Z	8010-515-1568	81348	LACQUER-CELLULOSIC DERIVATIVE TYPE,SLATE GRAY,LUSTERLESS, FOR USE ON PRIMED METAL SURFACES AS A CAMOUFLAGE FINISH,FED TT-L-20,1 GAL CN	ABC	GL		*	*	*		*		
PC-FZ-Z	8010-515-1596	81348	ENAMEL-INSIGNIA WHITE,FULL... GLOSS,FED TT-E-489,CLASS A, 1 QT CAN	ABC	QT		*	*	*		*		
PC-OZ-Z	8010-515-2208	E90Y3 54636	PRIMER COATING-YELLOW,USED... AS A CORROSION-INHIBITING PRIMER ON ACFT METAL SURFACES EITHER ALONE OR TOPCOATED W/LACQUER OR ENAMEL,MIL-P-8585,1 GAL CAN COMP	ABC	GL		*	*	*		*		
PC-FZ-Z	8010-515-2258	81349	REMOVER,PAINT-ORGANIC SOLVENT TYPE,LIQUID FORM,FOR USE IN STRIPPING LACQUERS & ENAMEL COATINGS FROM METAL SURFACES ON ACFT, MIL-R-8633,5 GAL PAIL COMP	ABC	GL		*	*	*		*		
PC-FZ-Z	8010-526-3296	81349	LACQUER-ACRYLIC..... NITROCELLULOSE TYPE,LIGHT GULL GRAY,LUSTERLESS,USED AS A GENERAL PURPOSE EXTERIOR PROTECTIVE COATING FOR METAL SURFACES, LUBRICATING OIL RESISTANT, MIL-L-19538,1 GAL CAN	ABC	GL		*	*	*		*		
PC-FZ-Z	8010-527-1508	81349	LACQUER-ACRYLIC.....	ABC	GL		*	*	*		*		

(1) SMR CODE	(2) FEDERAL STOCK NUMBER	(3) DESCRIPTION REFERENCE NUMBER & MFR CODE		USABLE ON CODE	(4) UNIT OF MEAS	(5) QTY INC IN UNIT	(6) 30-DAY DS/GS MAINT ALW (a) 1-20	(b) 21-50	(c) 51-100	(7) 1-YR ALWPER 100 EQUIP QNTGCY	(8) DEPOT MAINT ALWPER 100 EQUIP	(9) ILLUSTRATION (a) FIG NO	(b) ITEM NO
		FUNCTIONAL GROUP - 70	MAINTENANCE SUPPLIES	CH-47									
			CONTINUED NITROCELLULOSE TYPE, COLORLESS,FULL GLOSS,USED AS A GENERAL PURPOSE EXTERIOR PROTECTIVE COATING FOR METAL SURFACES, LUBRICATING OIL RESISTANT, MIL-L-19537,1 GAL CAN									MSUP	
PC-FZ-Z	8010-527-2053	81348	ENAMEL-JET BLACK,FULL GLOSS.. FED TT-E-489,CLASS A, 1 QT CAN	ABC	QT		*	*	*		*		
PC-OZ-Z	8010-527-2483	81349	LACQUER-ACRYLIC..... NITROCELLULOSE TYPE,LIGHT GREEN,FULL GLOSS,USED AS A GENERAL PURPOSE EXTERIOR PROTECTIVE COATING FOR METAL SURFACES,LUBRICATING OIL RESISTANT,MIL-L-19537, 1 GAL CAN	ABC	GL		*	*	*		*		
PC-OZ-Z	8010-527-2484	81349	LACQUER-ACRYLIC..... NITROCELLULOSE TYPE,LIGHT BLUE,FULL GLOSS,USED AS A GENERAL PURPOSE EXTERIOR PROTECTIVE COATING FOR METAL SURFACES,LUBRICATING OIL RESISTANT,MIL-L-19537, 1 GAL CAN	ABC	GL		*	*	*		*		
PC-FZ-Z	8010-527-2493	81349	LACQUER-ACRYLIC..... NITROCELLULOSE TYPE, INSIGNIA WHITE,FULL GLOSS, USED AS A GENERAL PURPOSE EXTERIOR PROTECTIVE COATING FOR METAL SURFACES, LUBRICATING OIL RESISTANT, MIL-L-19537,1 GAL CAN	ABC	GL		*	*	*		*		
PC-FZ-Z	8010-527-2496	81349	LACQUER-ACRYLIC..... NITROCELLULOSE TYPE,ORANGE YELLOW,FULL GLOSS,USED AS A GENERAL PURPOSE EXTERIOR PROTECTIVE COATING FOR METAL SURFACES,LUBRICATING OIL RESISTANT,MIL-L-19537, 1 QT CAN	ABC	QT		*	*	*		*		
PC-OZ-Z	8010-527-2500	81349	LACQUER-ACRYLIC..... NITROCELLULOSE TYPE,JET BLACK,FULL GLOSS,USED AS A GENERAL PURPOSE EXTERIOR PROTECTIVE COATING FOR METAL SURFACES,LUBRICATING OIL RESISTANT,MIL-L-19537,	ABC	QT		*	*	*		*		

(1) SMR CODE	(2) FEDERAL STOCK NUMBER	(3) DESCRIPTION REFERENCE NUMBER & MFR CODE	USABLE ON CODE	(4) UNIT OF MEAS	(5) QTY INC IN UNIT	(6) 30-DAY DS/GS MAINT ALW (a) 1-20	(b) 21-50	(c) 51-100	(7) 1-YR ALWPER 100 EQUIP CNTGCY	(8) DEPOT MAINT ALWPER 100 EQUIP	(9) ILLUSTRATION (a) FIG NO	(b) ITEM NO
		FUNCTIONAL GROUP - 70 MAINTENANCE SUPPLIES	CH-47									
		CONTINUED										
		1 QT CAN										
PC-OZ-Z	8010-527-2518	81349 LACQUER-ACRYLIC..... NITROCELLULOSE TYPE,ORANGE YELLOW,FULL GLOSS,USED AS A GENERAL PURPOSE EXTERIOR PROTECTIVE COATING FOR METAL SURFACES,LUBRICATING OIL RESISTANT,MIL-L-19537, 1 GAL CAN	ABC	GL		*	*	*		*	MSUP	
PC-OZ-Z	8010-527-2884	81349 LACQUER-ACRYLIC..... NITROCELLULOSE TYPE,JET BLACK,LUSTERLESS,USED AS A GENERAL PURPOSE EXTERIOR PROTECTIVE COATING FOR METAL SURFACES,LUBRICATING OIL RESISTANT,MIL-L-19538, 1 GAL CAN	ABC	GL		*	*	*		*		
C PC-OZ-Z	8010-527-2897	81349 THINNER,DOPE AND LACQUER-USE. FOR ACRYLIC NITROCELLULOSE LACQUERS,MIL-T-19544,5 GAL PAIL	ABC	GL		*	*	*		*		
PC-OZ-Z	8010-530-5827	81348 LACQUER-CELLULOSIC DERIVATIVE TYPE,OLIVE GREEN, LUSTERLESS,FOR USE ON PRIMED METAL SURFACES AS A CAMOUFLAGE FINISH,FED TT-L-20,1 QT CAN	ABC	QT		*	*	*		*		
PC-FZ-Z	8010-530-6387	81349 LACQUER-ACRYLIC..... NITROCELLULOSE TYPE,ORANGE YELLOW,LUSTERLESS,USED AS A GENERAL PURPOSE EXTERIOR PROTECTIVE COATING FOR METAL SURFACES,LUBRICATING OIL RESISTANT,MIL-L-19538, 1 GAL CAN	ABC	GL		*	*	*		*		
PC-FZ-Z	8010-543-2085	81349 LACQUER-ACRYLIC..... NITROCELLULOSE TYPE,WHITE, LUSTERLESS,USED AS A GENERAL PURPOSE EXTERIOR PROTECTIVE COATING FOR METAL SURFACES,LUBRICATING OIL RESISTANT,MIL-L-19538, 1 GAL CAN	ABC	GL		*	*	*		*		
PC-OZ-Z	8010-551-7932	81349 LACQUER-ACRYLIC..... NITROCELLULOSE TYPE, INSIGNIA RED,FULL GLOSS, USED AS A GENERAL PURPOSE EXTERIOR PROTECTIVE COATING FOR METAL SURFACES,	ABC	GL						*		

(1) SMR CODE	(2) FEDERAL STOCK NUMBER	(3) DESCRIPTION REFERENCE NUMBER & MFR CODE		USABLE ON CODE CH-47	(4) UNIT OF MEAS	(5) QTY INC IN UNIT	(6) 30-DAY DS/GS MAINT ALW (a) 1-20	(b) 21-50	(c) 51-100	(7) 1-YR ALWPER 100 EQUIP CNTGCY	(8) DEPOT MAINT ALWPER 100 EQUIP	(9) ILLUSTRATION (a) FIG NO	(b) ITEM NO
		FUNCTIONAL GROUP - 70 MAINTENANCE SUPPLIES											
		CONTINUED										MSUP	
			LUBRICATING OIL RESISTANT, MIL-L-19537,1 GAL CAN										
PC-OZ-Z	8010-551-7933	81349	LACQUER-ACRYLIC..... NITROCELLULOSE TYPE, INSIGNIA BLUE,FULL GLOSS, USED AS A GENERAL PURPOSE EXTERIOR PROTECTIVE COATING FOR METAL SURFACES, LUBRICATING OIL RESISTANT, MIL-L-19537,1 GAL CAN	ABC	GL		*	*	*		*		
PC-OZ-Z	8010-551-7934	81349	LACQUER-ACRYLIC..... NITROCELLULOSE TYPE, INSIGNIA RED,FULL GLOSS, USED AS A GENERAL PURPOSE EXTERIOR PROTECTIVE COATING FOR METAL SURFACES, LUBRICATING OIL RESISTANT, MIL-L-19537,1 QT CAN	ABC	EA		*	*	*		*		
PC-FZ-Z	8010-558-7026	81348	THINNER,PAINT,MINERAL SPIRITS FED TT-T-291,GRADE 1,5 GAL PAIL	ABC	GL		*	*	*		*		
PC-FZ-Z	8010-584-2426	81349	PRIMER COATING-ZINC YELLOW,.. USED AS A FAST DRYING SPRAY TYPE CORROSION-INHIBITING CELLULOSE NITRATE PRIMER, FOR USE W/PRETREATMENT COATING ON NEW OR PAINTED METAL WHICH HAS BEEN STRIPPED CLEAN,MIL-P-7962, 12 OZ AEROSOL CAN	ABC	OZ		*	*	*		*		
PC-OZ-Z	8010-597-7856	MS35637-1 96906	VARNISH,OIL-PHENOLIC RESIN... TYPE,USED AS A TRANSPARENT & ALUMINIZED EXTERIOR PROTECTIVE FINISH COATING FOR WOOD,METAL & DOPED FABRIC,ALSO SERVES AS AN ALUMINUM VEHICLE FOR CERTAIN ENAMELS & PRIMERS & AS A SEALING COMPOUND IN THE FABRICATION & REPAIR OF RIVETED ALUMINUM ALLOY TANKS,FED TT-V-119,1 GAL CN	ABC	GL		*	*	*		*		
PB-OZ-Z	8010-598-4718	EC1184 76381	FILLER,DENT,METAL SURFACE.... ALUMINUM COLOR,CAN BE USED FOR REPAIRING METAL CASTINGS,MIL-F-52252,1 QT CAN	ABC	QT		*	*	*		*		
PC-OZ-Z	8010-598-5455	81348	LACQUER-CELLULOSIC DERIVATIVE TYPE,GREEN BLUE,FULL GLOSS,	ABC	OZ		*	*	*		*		

(1) SMR CODE	(2) FEDERAL STOCK NUMBER	(3) DESCRIPTION REFERENCE NUMBER & MFR CODE	USABLE ON CODE	(4) UNIT OF MEAS	(5) QTY INC IN UNIT	(6) 30-DAY DS/GS MAINT ALW (a) 1-20	(b) 21-50	(c) 51-100	(7) 1-YR ALWPER 100 EQUIP CNTGCY	(8) DEPOT MAINT ALWPER 100 EQUIP	(9) ILLUSTRATION (a) FIG NO	(b) ITEM NO
		FUNCTIONAL GROUP - 70 MAINTENANCE SUPPLIES	CH-47									
		CONTINUED										
		USED AS AN EXTERIOR PROTECTIVE FINISH ON PRIMED METAL SURFACES,FED TT-L-32, TYPE 2,12 OZ PRESSURIZED CAN									MSUP	
C PC-FZ-Z	8010-598-5932	81348 ENAMEL-OLIVE DRAB,FULL GLOSS, FED TT-E-489,CLASS A, 1 QT CAN	ABC	QT		*	*	*		*		
PC-FZ-Z	8010-616-4009	81349 PAINT,HEAT RESISTING-1400 DEG F TEMP RATING,OLIVE DRAB, USE ON BLASTED & SOLVENT DEGREASED STEEL SURFACES THAT ARE SUBJECT TO HIGH TEMP & EXTERIOR WEATHERING, MIL-P-14105,1 GAL CAN	ABC	GL		*	*	*		*		
PC-FZ-Z	8010-664-0018	81349 PRIMER COATING-VINYL-ZINC.... CHROMATE PRIMER FOR USE OVER PRETREATMENT COATING, NEVER TO BE USED DIRECTLY ON METAL SURFACES OF ANY TYPE,TO BE USED W/HOT SPRAY EQUIPMENT,MIL-P-15930, 1 GAL CAN	ABC	GL		*	*	*		*		
PC-OZ-Z	8010-664-1914	81348 LACQUER-CELLULOSIC DERIVATIVE TYPE,MEDIUM GRAY, LUSTERLESS,USE ON PRIMED METAL,FED TT-L-20,12 OZ PRESSURIZED CAN	ABC	OZ		*	*	*		*		
PC-OZ-Z	8010-664-6155	81348 LACQUER-CELLULOSIC DERIVATIVE TYPE,OLIVE DRAB,LUSTERLESS, FOR USE ON PRIMED METAL SURFACES AS A CAMOUFLAGE FINISH,FED TT-L-20,1 GAL CN	ABC	EA		*	*	*		*		
PC-OZ-Z	8010-664-8263	81349 ENAMEL,HEAT RESISTING-BLACK.. USED AS AN EXTERIOR PROTECTIVE COATING FOR ACFT ENGINE CYLINDERS OR OTHER PARTS WHICH ARE SUBJECTED TO ELEVATED TEMP, MIL-E-5557,TYPE 1,1 QT CAN	ABC	QT		*	*	*		*		
PA-FZ-Z	8010-687-4019	81348 PIGMENT,ALUMINUM-PASTE FORM,.. EXTRA FINE LINING,FED TT-P-320,TYPE 2,CLASS A,1 LB CAN	ABC	LB		*	*	*		*		
PC-FZ-Z	8010-687-4386	81349 COATING COMPOUND,FLUORESCENT. RED-ORANGE,LIQUID FORM FOR DIRECT APPL,MIL-P-21600,TWO 1 GAL PAILS COATING	ABC	KT		*	*	*		*		

(1) SMR CODE	(2) FEDERAL STOCK NUMBER	(3) DESCRIPTION — REFERENCE NUMBER & MFR CODE		USABLE ON CODE CH-47	(4) UNIT OF MEAS	(5) QTY INC IN UNIT	(6) 30-DAY DS/GS MAINT ALW (a) 1-20	(b) 21-50	(c) 51-100	(7) 1-YR ALWPER 100 EQUIP CNTGCY	(8) DEPOT MAINT ALWPER 100 EQUIP	(9) ILLUSTRATION (a) FIG NO	(b) ITEM NO
		FUNCTIONAL GROUP - 70	MAINTENANCE SUPPLIES										
			CONTINUED									MSUP	
			COMPOUND & ONE 1 GAL PAIL										
			CLEAR COATING COMPOUND										
PC-OZ-Z	8010-721-9744	81348	LACQUER-NITROCELLULOSE,ORANGE YELLOW,FULL GLOSS,FED TT-L-50,TYPE 1,1 PT PRESSURIZED CAN	ABC	PT		*	*	*		*		
PC-FZ-Z	8010-835-2114	81349	PRIMER COATING-YELLOW,USED... AS A CORROSION-INHIBITING PRIMER ON ACFT METAL SURFACES EITHER ALONE OR TOPCOATED W/LACQUER OR ENAMEL,MIL-P-8585,1 PT CAN	ABC	PT		*	*	*		*		
PC-OZ-Z	8010-835-7215	81348	LACQUER-NITROCELLULOSE OR.... ACRYLIC RESIN,LIGHT GULL GRAY,FULL GLOSS,FED TT-L-50,TYPE 1 OR 2,16 OZ PRESSURIZED CAN	ABC	PT		*	*	*		*		
PC-FZ-Z	8010-847-4968	81349	LACQUER-ACRYLIC..... NITROCELLULOSE TYPE,OLIVE DRAB,FULL GLOSS,USED AS A GENERAL PURPOSE EXTERIOR PROTECTIVE COATING FOR METAL SURFACES,LUBRICATING OIL RESISTANT,MIL-L-19537, 1 QT CAN	ABC	QT		*	*	*		*		
PC-FZ-Z	8010-866-6810	EPOLUX100E6AS 93981	PAINT,EPOXY.....	ABC	EA		*	*	*		*		
PC-OZ-Z	8010-891-3112	E2833A 16193	SEALER,PAINT-C/O 1/2 PT BASE. & 1/2 PT HARDENER,GRAY, CHEMICAL & SOLVENT RESISTANT,8 HR POT LIFE	ABC	EA		*	*	*		*		
C PC-FZ-Z	8010-899-0931	81349	PRIMER COATING-INTERIOR..... GREEN,USED AS A CORROSION-INHIBITING PRIMER ON ACFT METAL SURFACES EITHER ALONE OR TOPCOATED W/LACQUER OR ENAMEL,MIL-P-8585,1 QT CAN	ABC	QT		*	*	*		*		
PC-OZ-Z	8010-899-8825	81349	PRIMER COATING-INTERIOR..... GREEN,USED AS A CORROSION-INHIBITING PRIMER ON ACFT METAL SURFACES EITHER ALONE OR TOPCOATED W/LACQUER OR ENAMEL,MIL-P-8585,16 OZ CAN	ABC	PT		*	*	*		*		
PC-OZ-Z	8010-927-9506	81348	LACQUER-CELLULOSIC DERIVATIVE TYPE,GREEN,LUSTERLESS, FED TT-L-20,1 QT CAN	ABC	QT		*	*	*		*		
C PA-OZ-Z	8010-930-7258	0465 04347	DENT FILLER-1 QT KIT.....	ABC			*	*	*		*		
PC-OZ-Z	8010-941-8712	81349	LACQUER-ACRYLIC.....	ABC	PT		*	*	*		*		

(1) SMR CODE	(2) FEDERAL STOCK NUMBER	(3) DESCRIPTION REFERENCE NUMBER & MFR CODE		USABLE ON CODE	(4) UNIT OF MEAS	(5) QTY INC IN UNIT	(6) 30-DAY DS/GS MAINT ALW (a) 1-20	(b) 21-50	(c) 51-100	(7) 1YR ALWPER 100 EQUIP CNTGCY	(8) DEPOT MAINT ALWPER 1% EQUIP	(9) ILLUSTRATION (a) FIG NO	(b) ITEM NO
		FUNCTIONAL GROUP - 70	MAINTENANCE SUPPLIES	CH-47									
			CONTINUED										
			NITROCELLULOSE TYPE,OLIVE DRAB,LUSTERLESS,USED AS A GENERAL PURPOSE EXTERIOR PROTECTIVE COATING FOR METAL SURFACES,LUBRICATING OIL RESISTANT,MIL-L-19538, 16 OZ CAN									MSUP	
PC-DZ-Z	8010-943-7127	81348	REMOVER,PAINT-ORGANIC..... SOLVENT,LIQUID FORM,FED TT-R-248,55 GAL DRUM	ABC	GL						*		
PC-OZ-Z	8010-985-0751	81348	LACQUER-CELLULOSIC DERIVATIVE TYPE,OLIVE DRAB,FULL GLOSS, USED AS AN EXTERIOR PROTECTIVE COATING FOR PRIMED METAL SURFACES,FED TT-L-32,TYPE 2,1 QT CAN	ABC	QT		*	*	*		*		
PB-FZ-Z	8030-081-2286	81349	SEALING COMPOUND-LIQUID FORM, PURPLE,MIL-S-22473,GRADE EV,50 CC BOTTLE	ABC	CC		*	*	*		*		
PC-FZ-Z	8030-081-2326	81349	SEALING COMPOUND-LIQUID FORM. BROWN,MIL-S-22473,GRADE H, 10 CC BOTTLE	ABC	CC		*	*	*		*		
PC-OZ-Z	8030-081-2328	10587076-3 18876	SEALING COMPOUND-LIQUID FORM. PURPLE,MIL-S-22473,GRADE E, 50 CC BOTTLE	ABC	CC		*	*	*		*		
PA-HZ-Z	8030-081-2335	81349	SEALING COMPOUND-LIQUID FORM, YELLOW,FOR SEALING & RETAINING METAL PARTS, MIL-S-22473,GRADE B,10 CC BOTTLE	ABC	CC		*	*	*		*		
PC-FZ-Z	8030-082-2425	81349	COATING COMPOUND,METAL..... PRETREATMENT,RESIN-ACID W/PIGMENTS & THINNERS,USED AS A TREATMENT ON ACFT METALS PRIOR TO THE APPL OF ANY PRIMER,MIL-C-8514,4 GAL PAIL OF RESIN W/1 GAL PLASTIC BOTTLE OF ACID/KT	ABC	GL		*	*	*		*		
PC-OZ-Z	8030-087-8630	81349	ANTISEIZE COMPOUND-C/O..... GRAPHITE & PETROLATUM,FOR USE ON ACFT ENGINE SPARK PLUGS,MIL-T-5544,1 LB CAN	ABC	LB		*	*	*		*		
C PA-FZ-Z	8030-104-9321	PROSEAL896 83527	SEALING COMPOUND-SYNTHETIC... RUBBER,NATURAL COLOR,PASTE FORM,2 HR RATED WORKING TIME,1 PT KIT COMP	ABC			*	*	*		*		
C PC-OZ-Z	8030-145-0001	81349	SEALING COMPOUND.....	ABC	OZ		*	*	*		*		

C
C
C
C

(1) SMR CODE	(2) FEDERAL STOCK NUMBER	(3) DESCRIPTION — REFERENCE NUMBER & MFR CODE		USABLE ON CODE	(4) UNIT OF MEAS	(5) QTY INC IN UNIT	(6) 30-DAY DS/GS MAINT ALW (a) 1-20	(b) 21-50	(c) 51-100	(7) 1-YR ALWPER 100 EQUIP CNTGCY	(8) DEPOT MAINT ALWPER 100 EQUIP	(9) ILLUSTRATION (a) FIG NO	(b) ITEM NO
		FUNCTIONAL GROUP - 70 MAINTENANCE SUPPLIES		CH-47									
		CONTINUED										MSUP	
		MIL-S-22473DGRT,6 OZ SPRAY CAN											
PB-OZ-Z	8030-152-0064	25008-2	92108	RESIN,EPOXY-654 SEMKIT 6 OZ.. SIZE CARTRIDGE W/EPON828 RESIN,ROOM TEMP POURABLE, FOR PREPARING LAMINATE & SURFACE COATING,CASTINGS & POTTING COMPOUNDS	ABC	OZ		*	*	*		*		
PC-HZ-Z	8030-165-8577	837016	19203	COATING COMPOUND,METAL..... PRETREATMENT,RESIN-ACID MIL-C-15328,4 GAL PAIL OF RESIN W/1 GAL BOTTLE OF ACID	ABC	KT		*	*	*		*		
C PC-OZ-Z	8030-209-8005		81348	SEALING COMPOUND-WHITE LEAD.. BASE W/ASPHALT,GRAPHITE, LUBRICATING OIL & PETROLATUM,350 DEG F MAX TEMP RATING,FOR PRESSURE UP TO 150 PSI,FED TT-A-580, 1/2 PT CAN	ABC	PT		*	*	*		*		
PC-FZ-Z	8030-231-2345		81349	CORROSION PREVENTIVE COMPOUND 0.004 IN.THK,HARD FILM,FOR COLD APPL,MIL-C-16173,GRADE 1,1 GAL CAN	ABC	GL		*	*	*		*		
PB-FZ-Z	8030-231-2353	424450PC7	10001	CORROSION PREVENTIVE COMPOUND PETROLATUM BASE,0.002 IN. THK,SOFT FILM,FOR HOT APPL, MIL-C-11796,CLASS 3,5 LB CN	ABC	LB		*	*	*		*		
PC-FZ-Z	8030-244-1293		81349	CORROSION PREVENTIVE COMPOUND 0.001 IN.THK,SOFT FILM,FOR COLD APPL,MIL-C-16173,GRADE 3,5 GAL PAIL	ABC	GL		*	*	*		*		
PA-OZ-Z	8030-244-1297		81349	CORROSION PREVENTIVE COMPOUND 0.002 IN.THK,SOFT FILM,FOR COLD APPL,MIL-C-16173,GRADE 2,1 GAL CAN	ABC	EA		*	*	*		*		
PC-OZ-Z	8030-244-1298		81349	CORROSION PREVENTIVE COMPOUND 0.002 IN.THK,SOFT FILM,FOR COLD APPL,MIL-C-16173,GRADE 2,5 GAL PAIL	ABC	GL		*	*	*		*		
PC-OZ-Z	8030-252-3391	FORMAGASKET2	77247	SEALING COMPOUND..... NONHARDENING,PASTE FORM,USE TO SEAL THD & GASKETS, MIL-S-45180,TYPE 2,11 OZ TU	ABC	OZ		*	*	*		*		
PC-OZ-Z	8030-262-9045	EC750	76381	SEALING COMPOUND-SYNTHETIC... RUBBER BASE,LIQUID FORM, BROWN,WATER,OIL & FUEL RESISTANT,USED FOR SEALING FUSELAGE SEAMS,1 PT CAN	ABC	PT		*	*	*		*		
PC-OZ-Z	8030-264-3886	EC1103-50ZTU	04963	SEALING COMPOUND-LIQUID FORM,	ABC	OZ		*	*	*		*		

(1) SMR CODE	(2) FEDERAL STOCK NUMBER	(3) DESCRIPTION REFERENCE NUMBER & MFR CODE		USABLE ON CODE	(4) UNIT OF MEAS	(5) QTY INC IN UNIT	(6) 30-DAY DS/GS MAINT ALW (a) 1-20	(b) 21-50	(c) 51-100	(7) 1-YR ALWPER 100 EQUIP CNTGCY	(8) DEPOT MAINT ALWPER 100 EQUIP	(9) ILLUSTRATION (a) FIG NO	(b) ITEM NO
		FUNCTIONAL GROUP - 70 MAINTENANCE SUPPLIES		CH-47									
		CONTINUED											
		MIL-D-17951											
PC-OZ-Z	8030-275-8114		81349 SEALING COMPOUND-POLYSULFIDE, PASTE FORM,MIL-S-11030,TYPE 1,CLASS 1,1 PT CAN	ABC	PT		*	*	*		*	MSUP	
PB-FZ-Z	8030-275-8117	EC801	76381 SEALING COMPOUND-W/SEPARATE.. CATALYST,PASTE FORM,BLACK, USE FOR PRESSURE CABIN SEALANT TO BE APPLIED TO THE INTERIOR ON SEAMS & RIVETS,MIL-S-7124,CLASS B-2,1-1/2 PT BASE IN A 1 QT CAN	ABC	KT		*	*	*		*		
PC-FZ-Z	8030-281-2339	EP711TYPEB2	83527 SEALING COMPOUND-SYNTHETIC... RUBBER BASE,W/SEPARATE CATALYST,NOT THINNABLE W/WATER,PASTE FORM, MIL-S-7502,CLASS B-2,1 PT CAN BASE W/CATALYST,KT/BX	ABC	EA		*	*	*		*		
PC-FZ-Z	8030-285-1570	9007316	18876 CORROSION PREVENTIVE COMPOUND PETROLATUM BASE,0.002 IN. THK,SUFT FILM,FOR HOT APPL, MIL-C-11796,CLASS 3,35 LB PAIL	ABC	LB		*	*	*		*		
PC-FZ-Z	8030-286-2735	EC1239B2	76381 SEALING COMPOUND-SYNTHETIC... RUBBER BASE,W/SEPARATE CATALYST,PASTE FORM, MIL-S-7502,CLASS B-2,1/2 PT CAN BASIC A COMPOUND W/JAR OF CATALYST,1/2 PT CAN BASIC B COMPOUND W/JAR OF CATALYST,2 OZ CAN TOPCOAT MATERIAL	ABC	KT		*	*	*		*		
XB-OZ-Z			81349 SEALING COMPOUND-SYNTHETIC... RUBBER,W/SEPARATE CATALYST, PASTE FORM,1 HR RATED APPL TIME,MIL-S-8516,CLASS 2,6 FLUID OZ BASE COMPOUND IN A 1/2 PT CAN REQUIRED AMOUNT OF CATALYST IN A JAR	ABC	KT								
PC-OZ-Z	8030-530-5234	RECTORSEAL15	77707 ANTISEIZE COMPOUND-160 DEG F. MAX TEMP RATING,FOR HIGH & LOW PRESSURE OXYGEN SYSTEMS,MIL-T-5542,1 LB CAN	ABC	EA		*	*	*		*		
PC-FZ-Z	8030-537-7925	EC801ANDEC1063	76381 SEALING COMPOUND-POLYSULFIDE, W/SEPARATE CATALYST,PASTE FORM,BLACK,USED FOR BONDING METAL TO METAL OR GLASS TO METAL,MIL-S-11031,3-1/2 OZ BASE W/CATALYST/KT	ABC	EA		*	*	*		*		
PC-FZ-Z	8030-559-6131		81349 SEALING COMPOUND-SYNTHETIC...	ABC	KT		*	*	*		*		

(1) SMR CODE	(2) FEDERAL STOCK NUMBER	(3) DESCRIPTION REFERENCE NUMBER & MFR CODE		USABLE ON CODE CH-47	(4) UNIT OF MEAS	(5) QTY INC IN UNIT	(6) 30-DAY DS/GS MAINT ALW (a) 1-20	(b) 21-50	(c) 51-100	(7) 1-YR ALWPER 100 EQUIP CNTGCY	(8) DEPOT MAINT ALWPER 100 EQUIP	(9) ILLUSTRATION (a) FIG NO	(b) ITEM NO
		FUNCTIONAL GROUP - 70	MAINTENANCE SUPPLIES										
			CONTINUED									MSUP	
			RUBBER,W/SEPARATE CATALYST, LIQUID FORM,BLACK, MIL-S-7502,CLASS A-2,1 QT CAN BASE W/JAR OR PLASTIC CONTAINER OF CATALYST,BX										
PC-OZ-Z	8030-597-5367	FELPROC5	73165 ANTISEIZE COMPOUND-FOR USE ON THD OF STEEL NUTS & BOLTS OF SUPERHEATED STEAM INSTL AT TEMP UP TO 1050 DEG F MAX,MIL-A-907,2-1/2 LB CAN	ABC	LB		*	*	*		*		
C PC-FZ-Z	8030-598-4503		81349 SEALING COMPOUND-W/SEPARATE.. CATALYST,LIQUID FORM,1 HR POT LIFE,USED ON SEAMS OF BOLTED ALUMINUM OR STEEL STORAGE TANKS,MIL-S-14231, 3/4 QT CAN BASE W/JR CATALYST/BX	ABC			*	*	*		*		
PC-FZ-Z	8030-613-3131	ALODINE1200	84063 CORROSION RESISTANT COATING,.. CHEMICALLY TREATED ALUMINUM 70 TO 110 DEG F OPERATING TEMP,MIL-C-5541,4 OZ PLASTIC JAR	ABC	OZ		*	*	*		*		
PC-FZ-Z	8030-685-0915	EC1675B2	04963 SEALING COMPOUND-SYNTHETIC... RUBBER BASE,W/SEPARATE CATALYST,PASTE FORM,USED FOR AREAS ON FUEL TANKS & FUEL CELL CAVITIES SUBJECTED TO TEMP RANGE OF MINUS 65 TO PLUS 275 DEG F, MIL-S-8802,CLASS B-2,1 QT CAN BASE,JAR CATALYST/KT	ABC	QT		*	*	*		*		
PA-FZ-Z	8030-629-1444	EC1130EC1063	76381 SEALING COMPOUND.....	ABC	KT		*	*	*		*		
PC-OZ-Z	8030-664-4017		81349 CORROSION PREVENTIVE,..... FINGERPRINT REMOVER MIL-C-15074,1 QT CAN	ABC	QT		*	*	*		*		
PC-HZ-Z	8030-664-4968		81349 PUTTY-USED AS A GENERAL..... PURPOSE FOR CRACKS, MIL-P-8116,10 LB CAN	ABC	LB		*	*	*		*		
PC-FZ-Z	8030-664-7583		81349 SEALING COMPOUND-SLOW CURE,.. SYNTHETIC RUBBER BASE, W/SEPARATE CATALYST,PASTE FORM,2 HR POT LIFE,USED FOR REINFORCING ELECTRICAL APPARATUS AGAINST CORROSION & WATER CONTAMINATION, MIL-S-8516,CLASS 3,24 FLUID OZ BASE IN 1 QT CAN,W/JAR CATALYST	ABC	KT		*	*	*		*		
PC-OZ-Z	8030-723-2746	89082-654	83527 SEALING COMPOUND-SYNTHETIC...	ABC	KT		*	*	*		*		

(1) SMR CODE	(2) FEDERAL STOCK NUMBER	(3) DESCRIPTION REFERENCE NUMBER & MFR CODE		USABLE ON CODE	(4) UNIT OF MEAS	(5) QTY INC IN UNIT	(6) 30-DAY DS GS MAINT ALW (a) 1-20	(b) 21-50	(c) 51-100	(7) 1 YR ALW PER 100 EQUIP CNTGCY	(8) DEPOT MAINT ALW PER 100 EQUIP	(9) ILLUSTRATION (a) FIG NO	(b) ITEM NO
		FUNCTIONAL GROUP - 70 MAINTENANCE SUPPLIES		CH-47									
												MSUP	
					CONTINUED								
					RUBBER BASE,W/SEPARATE CATALYST,PASTE FORM,2 HR POT LIFE,USED FOR AREAS ON FUEL TANKS & CELL CAVITIES SUBJECTED TO TEMP RANGE OF MINUS 65 TO PLUS 275 DEG F, MIL-S-8802,CLASS B-2,1 PT CAN BASE,JAR CATALYST								
C PA-OZ-Z	8030-731-3578	Q30-121	71984	SEALING COMPOUND-SYNTHETIC...	ABC	OZ		*	*	*		*	
				RUBBER BASE,PASTE FORM, WHITE,2 OZ TUBE									
PC-OZ-Z	8030-738-0673	95-204630-609	05972	ACTIVATOR-GRADE N,4 OZ SPRAY. CAN	ABC	EA		*	*	*		*	
PB-OZ-Z	8030-753-4596		81349	SEALING COMPOUND-SYNTHETIC...	ABC	KT		*	*	*		*	
				RUBBER BASE,W/SEPARATE CATALYST,PASTE FORM,1/2 HR POT LIFE,USED FOR AREAS ON FUEL TANKS & CELL CAVITIES SUBJECTED TO TEMP RANGE OF MINUS 65 TO PLUS 275 DEG F, MIL-S-8802,CLASS A-1/2,1/2 PT CAN BASE,JAR CATALYST								
PC-OZ-Z	8030-778-4277	990	87889	COMPOUND-A HIGH TEMP.....	ABC	EA		*	*	*		*	
				ANTISEIZE COMPOUND USED FOR THREADS ON NUTS & STUDS									
PC-FZ-Z	8030-784-3479	567	83527	SEALING COMPOUND-SYNTHETIC...	ABC	PT		*	*	*		*	
				RUBBER BASE,SOLID FORM, BROWN,USED FOR PERMANENTLY FLEXIBLE GAP OR HOLE FITTING,1 PT CAN BASE W/CATALYST								
PC-OZ-Z	8030-811-3723		81349	CORROSION RESISTANT COATING,..	ABC	LB		*	*	*		*	
				CHEMICALLY TREATED ALUMINUM TYPE 2,GRADE B,CLASS 1, MIL-C-5541,2 LB CAN									
PC-FZ-Z	8030-829-0376	NO12	84063	COATING KIT,ALUMINUM,.....	ABC	KT		*	*	*		*	
				CORROSION RESISTING-C/O NO.1200 TWO 1/4 LB JARS OF ALODINE,TWO 1/2 PT BOTTLES OF ALODINE TONER,NO.22 TWO 1 QT BOTTLES OF DEOXIDINE									
PA-HZ-Z	8030-829-4554	74-31	05972	THREAD LOCKING COMPOUND.....	ABC	CC		*	*	*		*	
				50 CC BOTTLE									
PC-OZ-Z	8030-838-7789	WD40	09137	CORROSION PREVENTIVE COMPOUND	ABC	OZ		*	*	*		*	
				CLEAR FILM,FOR COLD APPL, USE ON EXTERNAL SURFACES, MIL-C-23411,TYPE 1,16 OZ AEROSOL CAN									
PC-OZ-Z	8030-845-3347	EC801-807	76381	SEALING COMPOUND-W/SEPARATE..	ABC	EA		*	*	*		*	

(1) SMR CODE	(2) FEDERAL STOCK NUMBER	(3) DESCRIPTION REFERENCE NUMBER & MFR CODE		USABLE ON CODE CH-47	(4) UNIT OF MEAS	(5) QTY INC IN UNIT	(6) 30-DAY DS GS MAINT ALW (a) 1-20	(b) 21-50	(c) 51-100	(7) 1-YR ALWPER 100 EQUIP CNTGCY	(8) DEPOT MAINT ALWPER 100 EQUIP	(9) ILLUSTRATION (a) FIG NO	(b) ITEM NO
		FUNCTIONAL GROUP - 70	MAINTENANCE SUPPLIES									MSUP	
			CONTINUED CATALYST,PASTE FORM,USE FOR PRESSURE CABIN SEALANT TO BE APPLIED TO THE INTERIOR ON SEAMS & RIVETS, CLASS B-2,MIL-S-7124, 1 PT BOX										
C PB-HZ-Z PC-FZ-Z	8030-860-9771 8030-881-5238	HYSOL3478	04347 COMPOUND,HARDENER..... 81349 SEALING COMPOUND-SYNTHETIC... RUBBER BASE,W/SEPARATE CATALYST,FAST CURE,PASTE FORM,1/2 HR POT LIFE,FOR SEALING & REINFORCING ELECTRICAL APPARATUS AGAINST CORROSION & WATER CONTAMINATION,MIL-S-8516, CLASS 1,1 QT CAN BASE W/CATALYST	ABC ABC	KT		*	*	*		*		
PB-HZ-Z	8030-900-2373		81349 SEALING COMPOUND-LIQUID FORM, BLUE,USED FOR SEALING & RETAINING METAL PARTS, MIL-S-22473,GRADE NR, 4 OZ BOTTLE	ABC	OZ		*	*	*		*		
PC-HZ-Z	8030-905-6818		81349 SEALING COMPOUND-W/O SEPARATE CATALYST,NOT THINNABLE W/WATER,LIQUID FORM,ORANGE, MIL-S-22473,GRADE D,10 CC BOTTLE	ABC	CC		*	*	*		*		
PB-OZ-Z	8030-907-0879	SC1541	00624 DIP COMPOUND,SLEEVE-A..... LUBRICANT & SEALANT COMPOUND FOR INSULATION OF FIRE SLEEVES	ABC	EA		*	*	*		*		
PC-OZ-Z	8030-779-4700	EC1252	04963 SEALING COMPOUND-5 OZ TUBE...	ABC	OZ		*	*	*		*		
PC-FZ-Z	8030-955-0624	CV4-10	05972 LOCTITE-BLUE,2 CC TUBE.....	ABC	CC		*	*	*		*		
PA-OZ-Z	8030-965-2437		81349 SEALING COMPOUND-W/O SEPARATE CATALYST,NOT THINNABLE W/WATER,PASTE FORM,1 IN.W, MIL-S-11030,TYPE 3,90 FT ROLL	ABC	FT		*	*	*		*		
PC-OZ-Z	8030-980-3976	LOCQICGRQ60ZSPRAYCN	05972 ACTIVATOR-PRIMER-A PRIMER.... THAT ACCELERATES CURE SPEEDS ON LOCTITE PRODUCTS, MIL-S-22473	ABC	OZ		*	*	*		*		
PC-FZ-Z	8030-981-7007	1-50	05972 LOCTITE MAINTENANCE KIT.....	ABC	EA		*	*	*		*		
PB-FZ-Z	8040-016-8662	EPON934	33564 ADHESIVE-EPOXY,W/SEPARATE.... CATALYST,PASTE FORM,1 QT BX	ABC	EA		*	*	*		*		
PC-FZ-Z	8040-057-4108	92-018	71984 ADHESIVE-RUBBER,SILICONE,.... W/O SEPARATE CATALYST, BLACK,LIQUID FORM,2 OZ TUBE	ABC	OZ		*	*	*		*		
PB-FZ-Z	8040-104-5292	H8L3538	04347 HARDNER-1 PT CAN.....	ABC	PT		*	*	*		*		

(1) SMR CODE	(2) FEDERAL STOCK NUMBER	(3) DESCRIPTION REFERENCE NUMBER & MFR CODE		USABLE ON CODE	(4) UNIT OF MEAS	(5) QTY INC IN UNIT	(6) 30-DAY DS/GS MAINT ALW (a) 1-20	(b) 21-50	(c) 51-100	(7) 1YR ALWPER 100 EQUIP CNTGCY	(8) DEPOT MAINT ALWPER 100 EQUIP	(9) ILLUSTRATION (a) FIG NO	(b) ITEM NO
		FUNCTIONAL GROUP - 70	MAINTENANCE SUPPLIES	CH-47									
PB-FZ-Z	8040-104-9505	A4405	04347 RESIN-FOR REPAIR OF ROTARY... WINGS,1 QT CAN	ABC	CN		*	*	*		*	MSUP	
PC-HZ-Z	8040-144-9774	RTV3145	71984 ADHESIVE-SILICONE,W/O..... SEPARATE CATALYST,PASTE FORM,12 OZ CARTRIDGE	ABC	OZ		*	*	*		*		
PB-FZ-Z	8040-145-0019	SCOTCHWELD2216BA	94960 ADHESIVE-EPOXY RESIN,..... W/SEPARATE CATALYST,PASTE FORM,2 OZ W/REQUIRED AMOUNT CATALYST,KIT	ABC	EA		*	*	*		*		
PA-FZ-Z	8040-152-0010	25012-2	92108 SEALING COMPOUND-651 SEMKIT.. 6 OZ SIZE CARTRIDGE,W/ EC2216 ADHESIVE FOR BONDING RUBBER,METAL,PLASTIC,APP AT ROOM TEMP 90 MIN	ABC	EA		*	*	*		*		
PB-OZ-Z	8040-152-0028	25009-2	92108 ADHESIVE-654 SEMKIT 6 OZ SIZE CARTRIDGE W/FED MMM-A-132 ADHESIVE,USED FOR SPLICING OF HONEYCOMB IN SANDWICH PANEL & JOINING HONEYCOMB TO SPAR AND/OR REPAIR HONEYCOMB AREA ROOM TEMP CURE,USE RANGE MINUS 67 DEG F TO 300 DEG F,KT	ABC	EA		*	*	*		*		
PB-OZ-Z	8040-152-0067	25011-2	92108 ADHESIVE-651 SEMKIT 6 OZ SIZE CARTRIDGE W/MIL-A-5092, TYPE 3 ADHESIVE,FOR BONDING RUBBER TO METAL OR CURED FIBERGLASS,NONSTRUCTURAL PERFORMANCE,USE RANGE MINUS 67 DEG F TO 250 DEG F,FUEL RESISTANT	ABC	EA		*	*	*		*		
PC-OZ-Z	8040-165-8614	EC1357-1QTCN	76381 ADHESIVE-W/O SEPARATE..... CATALYST,LIQUID FORM,FOR BONDING RUBBER TO STEEL, FED MMM-A-121	ABC	QT		*	*	*		*		
PC-OZ-Z	8040-200-3794		81349 ADHESIVE-RESIN,SYNTHETIC,.... POLYESTER,W/SEPARATE CATALYST,LIQUID FORM, MIL-R-7575,GRADE A,CLASS 3, 1 QT CAN BASE COMPOUND, W/REQUIRED AMOUNT OF CATALYST,BX	ABC	KT		*	*	*		*		
PC-FZ-Z	8040-200-4390	EPONVI	86961 ADHESIVE-EPOXY RESIN BASE,... LIQUID FORM,W/SEPARATE CATALYST,FED MMM-A-134,TYPE 2,1 GAL CAN BASE,10 OZ BOTTLE CURING AGENT	ABC	KT		*	*	*		*		
PC-FZ-Z	8040-262-9011	SRG792	91488 ADHESIVE-SYNTHETIC RUBBER.... BASE BUNA-N ,LIQUID FORM, OIL,WATER & AROMATIC FUEL RESISTANT,MIL-A-5092,TYPE 3,1 PT CAN	ABC	PT		*	*	*		*		

(1) SMR CODE	(2) FEDERAL STOCK NUMBER	(3) DESCRIPTION REFERENCE NUMBER & MFR CODE		FUNCTIONAL GROUP - 70 MAINTENANCE SUPPLIES	USABLE ON CODE	(4) UNIT OF MEAS	(5) QTY INC IN UNIT	(6) 30-DAY DS/GS MAINT ALW (a) 1-20	(b) 21-50	(c) 51-100	(7) 1-YR ALWPER 100 EQUIP CNTGCY	(8) DEPOT MAINT ALWPER 100 EQUIP	(9) ILLUSTRATION (a) FIG NO	(b) ITEM NO
PC-OZ-Z	8040-262-9060	EC678-1QTCN	76381	ADHESIVE-LIQUID FORM,..... RESISTANT TO AROMATIC FUELS,USE FOR REPAIR OF FUEL CELLS OR OTHER GENERAL REPAIR,MIL-A-9117	ABC	QT		*	*	*		*	MSUP	
PC-OZ-Z	8040-266-0815		81349	ADHESIVE-ACRYLIC SYNTHETIC... RESIN BASE W/SEPARATE CATALYST,LIQUID FORM,USED FOR BONDING ACRYLIC PLASTIC,HOWEVER UNDER NO CIRCUMSTANCES CAN THIS ITEM BE USED FOR BONDING ACRYLIC PLASTIC ASSIGNED UNDER MIL-P-8184,MIL-A-8576,TYPE 1,1 PT CAN BASE W/CATALST	ABC	KT		*	*	*		*		
PC-FZ-Z	8040-270-8136	EPON8	86961	ADHESIVE-EPOXY RESIN BASE,... LIQUID FORM,W/SEPARATE CATALYST,FED MMM-A-134,TYPE 2,1 QT CAN BASE,JR/CATALYST	ABC	EA		*	*	*		*		
PB-FZ-Z	8040-270-8137		81348	ADHESIVE-EPOXY RESIN BASE,... LIQUID FORM,W/SEPARATE CATALYST,FED MMM-A-134,TYPE 1,1 QT CAN BASE,W/CATALYST	ABC	EA		*	*	*		*		
PC-OZ-Z	8040-270-8148	803145	19203	ADHESIVE-ACRYLIC SYNTHETIC... RESIN BASE,LIQUID FORM,USE FOR BONDING ACRYLIC PLASTIC,MIL-A-8576,1 GAL CAN BASE W/CATALYST	ABC	KT		*	*	*		*		
PC-OZ-Z	8040-290-4301	Q76072-3	19315	BASE,NEOPRENE,LIQUID..... BASE NEOPRENE ,LIQUID FORM,OIL & WATER RESISTANT, MIL-A-5092,TYPE 2,1 QT CAN	ABC	QT		*	*	*		*		
PC-OZ-Z	8040-291-0162		81349	ADHESIVE-SYNTHETIC RESIN..... BASE,LIQUID FORM,USE FOR NORMAL MECHANICAL PROPERTIES,MIL-R-7575,GRADE A,CLASS D,5 GAL CAN	ABC	GL		*	*	*		*		
C PA-OZ-Z	8040-298-1946	D236	70622	ADHESIVE-SYNTHETIC RUBBER.... BASE,BUNA-N,LIQUID FORM, OIL,FUEL & WATER RESISTANT, MIL-A-5092,TYPE 3, 1/2 PT CAN	ABC	OZ		*	*	*		*		
PC-FZ-Z	8040-515-2250	8169S9	19203	ADHESIVE-SYNTHETIC RUBBER.... BASE,BUNA-N,LIQUID FORM, OIL,WATER & AROMATIC FUEL RESISTANT,MIL-A-5092,TYPE 3,1 QT CAN	ABC	QT		*	*	*		*		
PC-FZ-Z	8040-598-5164	1007	70707	PRIMER,ADHESIVE-LIQUID FORM,. USE FOR HIGH STRENGTH BOND, AT ROOM TEMP,1 QT CAN	ABC	QT		*	*	*		*		
PA-FZ-Z	8040-653-3104	A4004	71984	PRIMER,ADHESIVE-SILICONE,..... PASTE FORM,USE FOR SURFACE	ABC	EA		*	*	*		*		
PC-FZ-Z	8040-664-2912		81348	ADHESIVE-LIQUID FORM,HEAT....	ABC	PT		*	*	*		*		

(1) SMR CODE	(2) FEDERAL STOCK NUMBER	(3) DESCRIPTION REFERENCE NUMBER & MFR CODE		USABLE ON CODE	(4) UNIT OF MEAS	(5) QTY INC IN UNIT	(6) 30-DAY DS GS MAINT ALW a. 1-20 b. 21-50 c. 51-99	(7) 1-YR ALWPER	(8) DEPOT MAINT ALW	(9) ILLUSTRATION a. FIG NO	b. ITEM NO
		FUNCTIONAL GROUP - 70 MAINTENANCE SUPPLIES		CH-47							
			CONTINUED								
			RESISTANT,USED FOR BONDING PRIMARY & SECONDARY STRUCTURAL & EXTERNAL METALLIC AIRFRAME PARTS EXPOSED TO TEMP RANGE OF MINUS 67 TO PLUS 180 DEG F, FED MMM-A-132,TYPE 1, CLASS 2,1 PT CAN							MSUP	
PC-OZ-Z	8040-664-4318	EC870	76381 ADHESIVE-SYNTHETIC RUBBER.... BASE,NEOPRENE,LIQUID FORM,OIL & WATER RESISTANT, MIL-A-5092,TYPE 2,1 PT CAN	ABC	PT		* * * *				
PC-FZ-Z	8040-701-9616	1200PRIMER	71984 PRIMER,ADHESIVE-SILICONE,.... IMPROVE ADHESION & VULCANIZE SILICONE RUBBER TO VARIOUS SUBSTRATES, 1 PT CAN	ABC	EA		* * * *				
PC-FZ-Z	8040-721-9091	C319RTV	71643 ADHESIVE-SYNTHETIC RUBBER.... BASE,LIQUID FORM, AIR-CURING,W/O USE OF HEAT OR PRESSURE,USED FOR BONDING SILICONE RUBBER TO ITSELF & TO ALUMINUM, MIL-A-25457,1 LB CAN BASE, JAR CATALYST,KT COMP	ABC	EA		* * * *				
PC-FZ-Z	8040-733-7281	95-204680-0079	58854 CATALYST,ADHESIVE-1 PT CAN...	ABC	PT		* * * *				
PC-OZ-Z	8040-763-7145	9205316	18876 SEALING COMPOUND-SYNTHETIC... RUBBER BASE,W/O SEPARATE CATALYST,NOT THINNABLE W/WATER,PASTE FORM,WHITE, 2 OZ TUBE	ABC	OZ		* * * *				
PA-FZ-Z	8040-776-9603	80055-44	73168 ADHESIVE-SYNTHETIC RESIN BASE W/SEPARATE CATALYST,LIQUID FORM,FOR LOW DENSITY POTTING OF HONEYCOMB MATERIAL,PKG 50 GM BASE/PLASTIC POUCH W/ATTACHED METAL TUBE CATALYST,KT	ABC	EA		* * * *				
PC-OZ-Z	8040-809-8252	948031-1154	06481 ADHESIVE-SYNTHETIC RUBBER,... W/O SEPARATE CATALYST, LIQUID FORM,FED MMM-A-121, 4 OZ BOTTLE	ABC	OZ		* * * *				
PC-FZ-Z	8040-822-6430	EPON828-1QTCN	86961 ADHESIVE-RESIN,SYNTHETIC,.... LIQUID FORM,USED TO INSULATE TRANSFORMER WINDING	ABC	PT		* * * *				
PA-FZ-Z	8040-831-3403	EPON901	86961 ADHESIVE-1 PT CAN.....	ABC	PT		* * * *				
PA-OZ-Z	8040-855-0779	230-1261P3	49956 PRIMER,ADHESIVE-1 QT CAN.....	ABC	QT		* * * *				

	(1) SMR CODE	(2) FEDERAL STOCK NUMBER	(3) DESCRIPTION REFERENCE NUMBER & MFR CODE			USABLE ON CODE CH-47	(4) UNIT OF MEAS	(5) QTY INC IN UNIT	(6) 30-DAY DS GS MAINT ALW (a) 1-20	(b) 21-50	(c) 51-100	(7) 1YR ALWPER 100 EQUIP CNTGCY	(8) DEPOT MAINT ALWPER 100 EQUIP	(9) ILLUSTRATION (a) FIG NO	(b) ITEM NO
			FUNCTIONAL GROUP - 70	MAINTENANCE SUPPLIES											
C	PB-HZ-Z	8040-860-9773	HYSOL4297	04347	RESIN,EPOXY COMPOUND.....	ABC			*	*	*		*	MSUP	
	PC-OZ-Z	8040-917-9932	EC1128	04963	CEMENT,BONDING.....	ABC	GL		*	*	*		*		
	PC-FZ-Z	8040-922-8288	S1006-28GMKIT	08795	ADHESIVE.....	ABC	PT		*	*	*		*		
R	PB-FZ-Z	6850-924-8827	RTV108	01139	SILICONE COMPOUND-A SOFT..... SPREADABLE THIXOTROPIC PASTE,TRANSLUCENT,MINUS 140 TO 600 DEG F EFFICIENT TEMP RANGE,CONTAINS NO SOLVENT, A GENERAL PURPOSE SEALING & BONDING MATERIAL, MIL-A-46106,3 OZ TUBE	ABC	OZ		*	*	*		*		
	PA-OZ-Z	8040-943-2502		76500	PRIMER,ADHESIVE-P/N A934B,... 1 PT CAN	ABC	EA		*	*	*		*		
C	PC-FZ-Z	8040-952-5713	EPON828-1PTCN	86961	ADHESIVE-RESIN,SYNTHETIC,.... LIQUID FORM,USED IN SURFACE COATING LAMINATING,CASTING & POTTING OF ELECTRICAL EQUIPMENT	ABC			*	*	*		*		
	PB-FZ-Z	8040-955-9491	H2-3404	04347	HARDENER,HYSOL-1 PT CAN.....	ABC	PT		*	*	*		*		
	PB-FZ-Z	8040-955-9514	A8-4307	04347	ADHESIVE-1 QT CAN.....	ABC	QT		*	*	*		*		
	PC-OZ-Z	8105-880-4353		81348	BAG,PAPER-4-3/4 IN.W,11 IN... LG,FED PPP-B-0023,TYPE 2, STYLE 2,500 BAG PER CARTON	ABC	EA		*	*	*		*		
	PA-OZ-Z	8135-160-7759		81348	PAPER,KRAFT,UNTREATED..... UNBLEACHED,36 IN.W,9 IN. ROLL DIA,FED UU-P-268, GRADE B,1228 FT ROOL	ABC	FT		*	*	*		*		
	PA-OZ-Z	8330-823-7545		81348	CHAMOIS LEATHER ASSORTMENT,.. SHEEPSKIN-5 SKIN-SHAPED PIECES PER PACKAGE, EDGE-TRIMMED,OIL-TANNED, SUEDE FINISH ON BOTH SIDES, FED KK-C-300,GRADE B, CLASS 2,SIZE S,M & L	ABC	EA		*	*	*		*		
C	PA-OZ-Z	8520-531-6484		81348	SOAP,TOILET-DESIGNED FOR USE. IN FRESH WATER,CAKE FORM, 6 OZ,FED P-S-620,TYPE 1, SIZE 3,100 CAKES PER CASE	ABC			*	*	*		*		
N	PA-OZ-Z	8945-080-9379		81348	SHORTENING COMPOUND-GENERAL.. PURPOSE USE,REGULAR,FED EE-S-321,TYPE 2,CLASS 1, 5-1/2 LB CAN	ABC	LB		*	*	*		*		
	PC-OZ-Z	9140-242-6748		81348	KEROSENE-USED AS A CLEANER... FOR MACHINERY OR TOOLS & FOR HEATING,FED VV-K-211, 1 GAL CAN WATER RES,MIL-G-81322,5 LB CAN	ABC	GL		*	*	*		*		
C C	PA-FZ-Z	9150-145-0268	AEROSHELLGREASF2	54527	GREASE,AIRCRAFT-MINUS 65 TO.. PLUS 350 DEG F EFFICIENT	ABC	CN		*	*	*		*		

	(1) SMR CODE	(2) FEDERAL STOCK NUMBER	(3) DESCRIPTION REFERENCE NUMBER & MFR CODE		USABLE ON CODE	(4) UNIT OF MEAS	(5) QTY INC IN UNIT	(6) 30-DAY DS/GS MAINT ALW a 1-20	b 21-50	c 51-100	(7) 1-YR ALWPER OF EQUIP	(8) DEPOT MAINT ALWPER OF EQUIP	(9) ILLUSTRATION a FIG NO	b ITEM NO
			FUNCTIONAL GROUP - 70	MAINTENANCE SUPPLIES	CH-47									
C				CONTINUED									MSUP	
C				TEMP RANGE,CORROSION,LOW EVAPORATION,OXIDATION & WATER RES,MIL-G-81322,5 LB CAN										
C	PA-OZ-Z	9150-159-4472		81349 HYDRAULIC FLUID,PETROLEUM.... BASE-ANTIWEAR,CORROSION & OXIDATION RESISTANT,RED, DESIGNED FOR SYNTHETIC RUBBER SEAL,MIL-H-6083, 1 LB CAN	ABC	LB		*	*	*		*		
	PA-FZ-Z	9150-180-5975	DC510-500	71984 DAMPING FLUID-SILICONE,..... 1 QT CAN	ABC	QT		*	*	*		*		
N	PA-OZ-Z	9150-180-6181		81349 HYDRAULIC FLUID,PETROLEUM.... BASE-ANTIWEAR,CORROSION & OXIDATION RESISTANT,RED, DESIGNED FOR SYNTHETIC RUBBER SEAL,MIL-H-5606, 8 OZ CAN	ABC	OZ		*	*	*		*		
N	PA-OZ-Z	9150-180-6266		81349 LUBRICATING OIL,AIRCRAFT..... TURBOSHAFT ENGINE,SYNTHETIC ANTIFOAM,ANTIWEAR, CORROSION,HIGH & LOW TEMP & OXIDATION RESISTANT, MIL-L-23699,8 OZ CAN	ABC	OZ		*	*	*		*		
	PB-OZ-Z	9150-190-0904		81349 GREASE,AUTOMOTIVE AND..... ARTILLERY-MINERAL AND/OR SYNTHETIC OIL W/THICKENER, CORROSION,OXIDATION & LOW EVAPORATION RESISTANT,MINUS 65 TO PLUS 175 DEG F EFFICIENT TEMP RANGE, MIL-G-10924,1 LB CAN	ABC	LB		*	*	*		*		
	PC-OZ-Z	9150-223-4129		81349 LUBRICATING OIL,INSTRUMENT... CORROSION & OXIDATION RESISTANT,MIL-L-6085,1 QT CAN	ABC	QT		*	*	*		*		
	PA-OZ-Z	9150-223-4130		81349 LUBRICATING OIL,GEAR-MINERAL. OIL & ADDITIVES,ANTIFOAM & CORROSION RESISTANT, MIL-L-6086,GRADE M,1 GAL CN	ABC	GL		*	*	*		*		
	PA-OZ-Z	9150-223-4134		81349 HYDRAULIC FLUID,PETROLEUM.... BASE-ANTIWEAR,CORROSION & OXIDATION RESISTANT,RED DESIGNED FOR SYNTHETIC RUBBER SEAL,USED IN RECOIL MECHANISMS,MIL-H-5606, 1 GAL CAN	ABC	GL		*	*	*		*		
C	PB-OZ-Z	9150-250-0926	14P1	82146 PETROLATUM,TECHNICAL-USE AS.. A LIGHT GRADE LUBRICATING	ABC	LB		*	*	*		*		

(1) SMR CODE	(2) FEDERAL STOCK NUMBER	(3) DESCRIPTION REFERENCE NUMBER & MFR CODE		USABLE ON CODE CH-47	(4) UNIT OF MEAS	(5) QTY INC IN UNIT	(6) 30-DAY DS/GS MAINT ALW (a) 1-20	(b) 21-50	(c) 51-100	(7) 1-YR ALWPER 100 EQUIP CNTGCY	(8) DEPOT MAINT ALWPER 100 EQUIP	(9) ILLUSTRATION (a) FIG NO	(b) ITEM NO
		FUNCTIONAL GROUP - 70	MAINTENANCE SUPPLIES										
			CONTINUED									MSUP	
PA-OZ-Z	9150-252-6383	WS491	80738 GREASE,FED VV-P-236,1 LB CN HYDRAULIC FLUID,PETROLEUM.... BASE-ANTIWEAR,CORROSION & OXIDATION RESISTANT,RED, DESIGNED FOR SYNTHETIC RUBBER SEAL,USED IN RECOIL MECHANISMS,MIL-H-5606, 1 QT CAN	ABC	QT		*	*	*		*		
PA-FZ-Z	9150-269-8255	COSMOLUBE615	73277 GREASE,AIRCRAFT-LIQUID..... LUBRICANT & GELLING AGENT, CORROSION,LOW EVAPORATION & OXIDATION RESISTANT,USE AS LUBRICANT BETWEEN RUBBER & METAL PARTS OF PNEUMATIC SYSTEMS,MIL-G-4343,1 LB CAN	ABC	LB		*	*	*		*		
PA-OZ-Z	9150-478-0055		81349 GREASE,AIRCRAFT-CORROSION,... OXIDATION & WATER RESISTANT,LOW EVAPORATION, MINUS 65 TO PLUS 160 DEG F EFFICIENT TEMP RANGE, MIL-G-25537,14 OZ CARTRIDGE	ABC	OZ		*	*	*		*		
PA-FZ-Z	9150-542-1430		81349 LUBRICATING OIL,GENERAL..... PURPOSE-CORROSION & OXIDATION RESISTANT, MIL-L-7870,4 OZ CAN	ABC	OZ		*	*	*		*		
PC-OZ-Z	9150-577-5841		81349 LUBRICATING OIL,GEAR..... UNIVERSAL TYPE,ANTIFOAM, CORROSION RESISTANT,EXTREME PRESSURE,MIL-L-2105, GRADE 80,5 GAL PAIL	ABC	GL		*	*	*		*		
PA-FZ-Z	9150-597-6628	DC510-100	71984 DAMPING FLUID-SILICONE,1 QT.. CAN	ABC	EA		*	*	*		*		
PA-OZ-Z	9150-616-9020		81349 GREASE,AIRCRAFT-LOW TEMP..... LIQUID LUBRICANT & GELLING AGENT,CORROSION, OXIDATION,WATER & LOW EVAPORATION RESISTANT,MINUS 65 TO PLUS 160 DEG F EFFICIENT TEMP RANGE, MIL-G-25537,1 LB CAN	ABC	LB		*	*	*		*		
PC-OZ-Z	9150-754-0064		81349 LUBRICANT,SOLID FILM..... MIL-L-23398,TYPE 2, 12 OZ AEROSOL CAN	ABC	OZ		*	*	*		*		
PA-OZ-Z	9150-754-2595	MOLITHNOZMOLY	73219 GREASE,MOLYBDENUM DISULFIDE.. LIQUID LUBRICANT,GELLING AGENT,CORROSION,OXIDATION, WATER & LOW EVAPORATION RESISTANT,USE AS A LUBRICANT ON HEAVILY LOADED	ABC	LB		*	*	*		*		

(1) SMR CODE	(2) FEDERAL STOCK NUMBER	(3) DESCRIPTION REFERENCE NUMBER & MFR CODE		USABLE ON CODE	(4) UNIT OF MEAS	(5) QTY INC IN UNIT	(6) 30-DAY DS GS MAINT ALW a. 1-20	b. 21-50	c. 51-100	(7) 1-YR ALWPER 100 EQUIP CNTGCY	(8) DEPOT MAINT ALWPER 100 EQUIP	(9) ILLUSTRATION a. FIG NO	b. ITEM NO
		FUNCTIONAL GROUP - 70	MAINTENANCE SUPPLIES	CH-47									
			CONTINUED										
			SLIDING STEEL SURFACES, MIL-G-21164,1 LB CAN									MSUP	
PC-OZ-Z	9150-782-2627	81349	LUBRICATING OIL,AIRCRAFT..... TURBINE ENGINE,SYNTHETIC ANTIFOAM,CORROSION & OXIDATION RESISTANT, MIL-L-007808,1 QT CAN	ABC	QT		*	*	*		*		
PA-FZ-Z	9150-813-5123	DC510-200 71984	DAMPING FLUID-SILICONE,..... 1 LB CAN	ABC	LB		*	*	*		*		
PA-OZ-Z	9150-889-3516	PLASTILUBEMOLY3 02307	GREASE,GENERAL PURPOSE..... MINERAL OIL & GELLING AGENT,W/MOLYBDENUM DISULFIDE,32 TO 500 DEG F EFFICIENT OPERATING TEMP,1 LB CAN	ABC	LB		*	*	*		*		
C PA-HZ-Z	9150-935-5851	81349	GREASE,AIRCRAFT-CORROSION,LOW EVAPORATION,OXIDATION & WATER RESISTANT,MINUS 65 TO PLUS 350 DEG F EFFICIENT TEMP RANGE,MIL-G-81322, 35 LB PAIL	ABC			*	*	*		*		
PA-FZ-Z	9150-935-9807	81349	HYDRAULIC FLUID,PETROLEUM.... BASE-ANTIWEAR,CORROSION & OXIDATION RESISTANT,RED, DESIGNED FOR SYNTHETIC RUBBER SEAL,MIL-H-6083,TYPE 1,1 QT CAN	ABC	QT		*	*	*		*		
PA-OZ-Z	9150-944-8953	81349	GREASE,AIRCRAFT-LIQUID..... LUBRICANT & GELLING AGENT MINUS 65 TO PLUS 350 DEG F EFFICIENT TEMP RANGE, CORROSION,LOW EVAPORATION, OXIDATION & WATER RESISTANT,MIL-G-81322,1 LB CAN	ABC	LB		*	*	*		*		
PA-FZ-Z	9150-965-2305	81349	LUBRICATING OIL,AIRCRAFT..... PISTON ENGINE-CORROSION RESISTANT,MIL-L-22851, TYPE 3,55 GAL DRUM,18 GAGE	ABC	GL		*	*	*		*		
PA-OZ-Z	9150-985-7099	81349	LUBRICATING OIL,AIRCRAFT..... TURBOSHAFT ENGINE,SYNTHETIC ANTIFOAM,ANTIWEAR,CORROSION & OXIDATION RESISTANT, MIL-L-23699,1 QT CAN	ABC	QT		*	*	*		*		
PA-OZ-Z	9150-985-7246	81349	GREASE,AIRCRAFT AND..... INSTRUMENT-LOW TEMP LIQUID LUBRICANT & A GELLING AGENT W/EXTREME PRESSURE	ABC	LB		*	*	*		*		

(1) SMR CODE	(2) FEDERAL STOCK NUMBER	(3) DESCRIPTION REFERENCE NUMBER & MFR CODE	USABLE ON CODE CH-47	(4) UNIT OF MEAS	(5) QTY INC IN UNIT	(6) 30-DAY DS 'GS MAINT ALW (a) 1-20	(b) 21-50	(c) 51-100	(7) 1-YR ALWPER 100 EQUIP CNTGCY	(8) DEPOT MAINT ALWPER 100 EQUIP	(9) ILLUSTRATION (a) FIG NO	(b) ITEM NO
		FUNCTIONAL GROUP - 70 MAINTENANCE SUPPLIES										
		CONTINUED ADDITIVE,MINUS 100 TO PLUS 250 DEG F EFFICIENT TEMP RANGE,300 DEG F MAX OPERATING TEMP,ENVIRONMENT RESISTANT,MIL-G-23827, 1 LB CAN							•		MSUP	
PA-OZ-Z	9150-985-7247	81349 GREASE,AIRCRAFT AND..... INSTRUMENT-CORROSION,LOW EVAPORATION,OXIDATION & WATER RESISTANT,MINUS 100 TO PLUS 250 DEG F EFFICIENT TEMP RANGE,FOR USE IN BALL, ROLLER,NEEDLE BEARINGS & GEARS,MIL-G-23827,5 LB CAN	ABC	LB		*	*	*		*		
PB-OZ-Z	9160-253-1173	81348 BEESWAX,TECHNICAL-SOLID BALL. FORM,FED C-B-191,2 OZ PKG	ABC	OZ		*	*	*		*		

	(1) SMR CODE	(2) FEDERAL STOCK NUMBER	(3) DESCRIPTION — REFERENCE NUMBER & MFR CODE		USABLE ON CODE	(4) UNIT OF MEAS	(5) QTY INC IN UNIT	(6) 30-DAY DS/GS MAINT ALW (a) 1-20	(b) 21-50	(c) 51-100	(7) 1-YR ALWPER 100 EQUIP ONTGCY	(8) DEPOT MAINT ALWPER (x) EQUIP	(9) ILLUSTRATION (a) FIG NO	(b) ITEM NO
			FUNCTIONAL GROUP - 40	AIRFRAME TOOLS	CH-47									
	PB-DZ-Z	5120-177-9524	QB75619-1	19315 PUNCH,PISTON ASSEMBLY U/W... P/N QB75618-1	ABC	EA	V					1	A1	1
	PB-DZ-Z	5120-177-9523	QB75618-1	19315 ANVIL PISTON ASSEMBLY U/W... P/N QB75619-1	ABC	EA	V					1	A1	
	PB-DZ-Z	4920-964-1325	114GS073-1	77272 FIXTURE,HOLDING.....	ABC	EA	V					*	A1	2
	MF-DZ-Z		1560CH47-387-4	81996 KIT,TEST BOARD.....	ABC		V						A1	3
	PB-HZ-Z	4920-456-6020	114GS233-1	77272 ADAPTER ASSEMBLY,FIXTURE..... PRESSING U/W P/N 114GS235-1	ABC	EA	V	1	1	1		1	A1	4
	PB-HZ-Z	4920-456-6010	114GS235-1	77272 FIXTURE,PRESSING U/W P/N.... 114GS233-1	ABC	EA	V	1	1	1		1	A1	5
	PB-DZ-Z	5120-443-1071	114GS245-1	77272 DISASSEMBLY TOOL.....	C	EA	V					1	A1	6
	XB-DZ-Z		114G1113-1	77272 FIXTURE,WEIGHING.....	ABC	EA	V						A1	7
C	PB-DZ-Z	4920-931-8330	114G1138-1	77272 FIXTURE,BACKLASH.....	AB	EA	V					*	A2	1
C	XB-DB-D		114E5992-94	77272 FIXTURE,BACKLASH AND GEAR....	AB	EA	V						A2	1
	PB-DZ-Z	4920-420-5202	114G1170-1	77272 FIXTURE,BALANCING.....	A	EA	V					1	A2	2
	PB-DZ-Z	3465-228-8813	114G1175-1	77272 DRILL JIG,ROTARY.....	A	EA	V					*	A2	3
	PB-DZ-Z	3465-228-8811	114G1177-1	77272 DRILL JIG,ROTARY.....	A	EA	V					*	A2	3
	PB-DZ-Z	3465-228-8810	114G1179-1	77272 DRILL JIG,ROTARY.....	A	EA	V					*	A2	3
	PB-DZ-Z	3465-228-8805	114G1176-1	77272 DRILL JIG,ROTARY.....	A	EA	V					*	A2	4
	PB-DZ-Z	4730-842-8467	T233248	62983 NOZZLE ASSEMBLY,FLUSHING.....	ABC	EA	V					*	A2	5
	PB-DZ-Z	3465-228-8815	114G1178-1	77272 DRILL JIG,ROTARY.....	A	EA	V					*	A2	6
	XB-DZ-Z		114G1072-1	77272 GUIDE,INSTALLING.....	ABC	EA	V						A2	7
	PB-DZ-Z	5120-745-7763	5120CH47-013-1	81996 WRENCH,SPANNER.....	ABC	EA	V	1	1	1		1	A2	8
	PB-HZ-Z	4920-457-9829	114GS230-1	77272 ADAPTER,LIMIT SETTING.....	ABC	EA	V	1	1	1		1	A2	9
	PB-HZ-Z	5120-947-9966	A96	03683 SCREWDRIVER BIT SET.....	ABC	EA	V	*	*	*		*	A2	
	PB-DZ-Z	5120-831-5405	QB71013-15	19315 RING,ADAPTER.....	ABC	EA	V					*	A2	
	PB-DZ-Z	4730-891-5263	3305-8	00624 COUPLING HALF.....	A	EA	V	*	*	*		*	A3	1
	PB-FZ-Z	4730-818-9948	3305-12	00624 COUPLING HALF,QUICK..... DISCONNECT	A	EA	V	*	*	*		*	A3	1
	PB-HZ-Z	4920-659-2328	T222655	62983 FIXTURE,TEST.....	ABC	EA	V	*	*	*		*	A3	2
	PB-FZ-Z	4920-842-5899	114G1185-1	77272 PUSHER,HORIZONTAL HINGE PIN..	ABC	EA	V	*	*	*		*	A3	3
C	PB-FF-F	4920-799-0485	114E5970-33	77272 TORQUE PLATE ASSEMBLY.....	ABC	EA	V	*	*	*		*	A3	6
	PB-HZ-Z	5120-947-3529	AMF11-0172-1-3	93712 SOCKET,WRENCH,FACE SPANNER...	ABC	EA	V	1	1	1		1	A3	7
	PB-HZ-Z	4920-947-3508	AMF11-0172-1-4	93712 HOLDER,DRIVE NUT.....	ABC	EA	V	1	1	1		1	A3	8
	PB-HZ-Z	4920-997-6286	114GS174-1	77272 FIXTURE,PINNING.....	A	EA	V	*	*	*		*	A3	9
	PB-HZ-Z	4920-904-4248	T186820	62983 FIXTURE,HOLDING.....	ABC	EA	V	*	*	*		*	A4	1
C	PB-DZ-D	4920-228-1857	114G1246-2	77272 BEARING REMOVER.....	BC	EA	V					*	A4	2

(1) SMR CODE	(2) FEDERAL STOCK NUMBER	(3) DESCRIPTION — REFERENCE NUMBER & MFR CODE			USABLE ON CODE CH-47	(4) UNIT OF MEAS	(5) QTY INC IN UNIT	(6) 30-DAY DS/GS MAINT ALW (a) 1-20	(b) 21-50	(c) 51-100	(7) 1 YR ALWPER 100 EQUIP CNTGCY	(8) DEPOT MAINT ALWPER 100 EQUIP	(9) ILLUSTRATION (a) FIG NO	(b) ITEM NO
		FUNCTIONAL GROUP - 40 AIRFRAME TOOLS												
PB-FZ-Z	4920-421-1794	114G1262-1	77272	FIXTURE,HANDLING.....	B	EA	V	1	1	1		1	A4	3
PB-HZ-Z	5220-986-1136	114GS131-1	77272	GAGE,CHECKING.....	ABC	EA	V	*	*	*		*	A4	4
PB-HZ-Z	5120-453-9449	114G1269-1	77272	COMPRESSOR,PISTON.....	C	EA	V	*	*	*		*	A4	5
PB-HZ-Z	4920-443-1120	114G1276-1	77272	FIXTURE,TEST,RELIEF.....	C	EA	V	*	*	*		*	A4	6
XB-DZ-Z		114G1121-1	77272	PLATE,TORQUE.....	ABC	EA	1						A4	7
PB-HZ-Z	5120-947-3513	T1230	93712	SOCKET,WRENCH,FACE SPANNER...	ABC	EA	V	1	1	1		1	A4	8
PB-HZ-Z	4920-947-3499	T1236	93712	CLUTCH,DISK DRIVER.....	ABC	EA	V	*	*	*		*	A4	9
PB-DZ-Z	1730-867-1253	114E5897-11	77272	PIN SET,PITCH LOCK,BLADE..... FOLDING-2 SETS PER ACFT	ABC	EA	V	1	1	1		1	A4	10
PB-HZ-Z	4920-369-9557	114G1290-1	77272	FIXTURE,HOLDING.....	C	EA	V	*	*	*		*	A5	1
PB-HZ-Z	5120-443-1072	114G1291-1	77272	COMPRESSOR,PACKING.....	C	EA	V	*	*	*		*	A5	2
PB-DZ-Z	4920-923-2191	114G1078-1	77272	FIXTURE,HOLDING.....	ABC	EA	V					*	A5	3
PB-HZ-Z	4920-420-5204	114G1292-1	77272	FIXTURE,SHOCK ABSORBER.....	C	EA	V	*	*	*		*	A5	4
PB-DZ-Z	5120-923-2486	114G1100-1	77272	SOCKET,WRENCH,FACE SPANNER...	ABC	EA	V					1	A5	5
PB-DZ-Z	4920-484-3957	114G1298-1	77272	ADAPTER SUPPORT SHAFT..... BALANCER	C	EA	V					1	A5	6
PB-DZ-Z	4920-879-3046	114G1235-1	77272	BENDING TOOL,TRIM.....	BC	EA	V					*	A5	7
PB-DZ-Z	5120-962-8119	114G1153-1	77272	WRENCH,SPANNER.....	ABC	EA	V					1	A5	8
PB-DZ-Z	5120-962-9627	114G1157-1	77272	WRENCH,SPANNER.....	ABC	EA	V					*	A5	8
PB-DZ-Z	5120-962-9629	114G1156-1	77272	WRENCH,SPANNER.....	ABC	EA	V					*	A5	9
PB-HZ-Z	4920-947-4504	114GS229-1	77272	FIXTURE,CLUTCH RUN.....	ABC	EA	V	*	*	*		1	A5	10
PB-DZ-Z	5120-484-3894	114G1299-1	77272	WRENCH,LOCKNUT.....	C	EA	V					1	A6	1
C AD-DZ-Z		4920CH47-003-1	81996	KIT,BLADE TRACKING.....	ABC		V						A6	2
XB-DZ-Z		B2278	99866	.CABLE ASSEMBLY TRACKING KIT.	ABC	EA	V						A6	
C PB-DD-D	4920-156-9946	135M9	99866	.TRACKER,BLADE.....	ABC	EA	V	*	*	*		*	A6	
PB-DZ-Z	4920-003-8527	B3140-2	99866	ADAPTER,POWER SUPPLY..... U/W PN 135M9	ABC	EA	V	*	*	*		*	A6	
PB-DZ-Z	4920-443-1145	114G1300-1	77272	ADAPTER,TORQUE.....	C	EA	V					1	A6	3
PB-DZ-Z	5120-253-1564	114G1303-1	77272	PULLER,MECHANICAL.....	C	EA	V					1	A6	4
PB-DZ-Z	1730-070-6758	114E5043-1	77272	CLAMP ASSEMBLY,LAG DAMPER....	ABC	EA	V	4	4	4		1	A6	6
PB-HZ-Z	6685-906-0285	114E5967-1	77272	INDICATOR ASSEMBLY.....	A	EA	V	1	1	1		1	A6	7
PB-HZ-Z	4930-065-0578	T7669-2	93712	GREASE GUN,LINEAR ACTUATOR...	ABC	EA	V	*	*	*		*	A6	8
PB-HZ-Z	4930-064-4535	T7669-3	93712	GREASE GUN,LINEAR ACTUATOR...	ABC	EA	V	*	*	*		*	A6	8
PB-HZ-Z	4920-890-5181	02W156-197-1	00736	FIXTURE,TEST,OIL FILTER.....	ABC	EA	V	*	*	*		*	A7	1
PB-HZ-Z	4920-890-5182	114GS224-1	77272	FIXTURE,TEST,OIL FILTER.....	ABC	EA	V	1	1	1		1	A7	1
PB-HZ-Z	4920-922-5842	114GS198-1	77272	FIXTURE,TEST,OIL.....	ABC	EA	1	1	1	1		1	A7	1
PB-HZ-Z	4920-890-5183	114GS196-1	77272	TEST FIXTURE,OIL.....	ABC	EA	V	1	1	1		1	A7	1
PB-DZ-Z	4920-799-0481	114G1086-1	77272	ADAPTER SUPPORT.....	AB	EA	V					1	A7	2

	(1) SMR CODE	(2) FEDERAL STOCK NUMBER	(3) DESCRIPTION REFERENCE NUMBER & MFR CODE			USABLE ON CODE	(4) UNIT OF MEAS	(5) QTY INC IN UNIT	(6) 30-DAY DS/GS MAINT ALW (a) 1-20	(b) 21-50	(c) 51-100	(7) 1-YR ALWPFR 100 EQUIP CNTGCY	(8) DEPOT MAINT ALWPER 100 EQUIP	(9) ILLUSTRATION (a) FIG NO	(b) ITEM NO
			FUNCTIONAL GROUP - 40 AIRFRAME TOOLS			CH-47									
	XB-DZ-Z		114G1084-1	77272	ADAPTER,SUPPORT.....	ABC	EA	V						A7	2
	PB-DZ-Z	4920-799-0484	114D3046DYBA15	77272	ADAPTER SUPPORT,BALANCING....	ABC	EA	V						A7	3
	PB-FZ-Z	4920-879-3037	114G1233-1	77272	FIXTURE,LOCATING.....	BC	EA	V					1	A7	4
	MH-OZ-Z		114G1161-1	77272	WRENCH,SPANNER.....	AB		V	1	1	1		1	A7	5
C	PB-DZ-Z	5120-178-0963	114G1307-1	77272	PULLER,BEARING.....	C	EA	V						A7	6
	PB-DZ-D	4920-369-9581	114G1309-1	77272	PRELOAD,FIXTURE.....	C	EA	V					1	A7	7
	XB-DZ-Z		114G1082-1	77272	ARBOR,DYNAMIC BALANCING.....	AB	EA	V					1	A7	8
	PB-HZ-Z	5120-772-7149	T216073	62983	MANDREL,BEARING.....	ABC	EA	V	1	1	1		1	A8	1
	PB-DZ-Z	5120-772-7156	T233281	62983	DRIVER,BEARING.....	ABC	EA	V					1	A8	2
	PB-DZ-Z	4935-760-1362	114GS077-1	77272	FIXTURE,HOLDING.....	ABC	EA	V					1	A8	3
	PB-DZ-Z	5120-940-0994	T243379	62983	DRIVER PLUG,BEARING.....	ABC	EA	V					*	A8	3
	PB-DZ-Z	4920-924-7726	114G1079-1	77272	FIXTURE,HOLDING.....	ABC	EA	V					*	A8	4
C	PB-DB-Z	5120-484-3895	114G1245-1	77272	WRENCH,OIL TANK.....	A	EA	V	*	*	*		*	A8	5
	PB-HZ-Z	5120-891-1367	114G1188-1	77272	WRENCH,LOCKNUT.....	ABC	EA	V	1	1	1		1	A8	6
	PB-DZ-Z	5120-453-9503	114G1394-1	77272	WRENCH,PIN ASSEMBLY.....	ABC	EA	V	1	1	1		1	A8	7
					EFF 59-4982 B-1 AND SUBS										
	PB-FZ-Z	4920-087-7638	114G1247-1	77272	FIXTURE,LOCATING.....	ABC	EA	V	*	*	*		*	A8	8
	PB-HZ-Z	4920-842-6339	114G1193-1	77272	TEST JIG POWER STEERING.....	ABC	EA	V	1	1	1		1	A8	9
	PB-HZ-Z	4920-456-6013	114GS232-1	77272	ADAPTER,CLUTCH,MAGNETIC BRAKE	ABC	EA	V	1	1	1		1	A8	10
	MH-OZ-Z		1560CH47-403-1	81996	GAGE,ADJUSTMENT.....	ABC		V						A8	11
	PB-FZ-Z	4920-863-5773	114E5802-1	77272	WRENCH,ROTOR HUB.....	ABC	EA	V	1	1	1		1	A9	1
C	PB-FZ-Z	5120-979-7582	114E5803-1	77272	PUSHER ASSEMBLY.....	ABC	EA	V	1	1	1		1	A9	2
	PB-FZ-Z	5120-886-1519	114E5804-1	77272	DRIFT.....	ABC	EA	V	1	1	1		1	A9	3
	PB-DZ-Z	5120-886-1520	114E5806-1	77272	DRIFT.....	ABC	EA	V					1	A9	4
	PB-DZ-Z	5120-886-1521	114E5807-1	77272	SPLIT PLATE ASSEMBLY.....	ABC	EA	V					*	A9	5
	PB-DZ-Z	5120-864-0509	114E5808-1	77272	SPLIT PLATE ASSEMBLY.....	ABC	EA	V					*	A9	5
	PB-HZ-Z	4920-842-6340	114G1194-1	77272	ACTUATOR,POWER STEERING.....	ABC	EA	V	1	1	1		1	A9	6
	PB-DZ-Z	4920-443-1116	114G1313-1	77272	FIXTURE,CHECKING.....	C	EA	V					1	A9	7
	PB-HZ-Z	5120-891-1369	114G1200-1	77272	DRIFT,BEARING.....	ABC	EA	V	*	*	*		*	A9	8
	PB-HZ-Z	4920-456-6011	114GS234-1	77272	ADAPTER,CLUTCH.....	ABC	EA	V	1	1	1		1	A9	9
	PB-DZ-Z	5120-443-1070	114G1304-1	77272	PULLER ASSEMBLY,BEARING.....	C	EA	V					1	A9	10
	PB-FZ-Z	5120-864-0510	114E5809-1	77272	PULLER ASSEMBLY,ROTOR HEAD...	ABC	EA	V	*	*	*		1	A10	1
	PB-DZ-Z	5120-864-0511	114E5810-1	77272	PULLER ASSEMBLY,ROTOR HUB....	ABC	EA	V					1	A10	2
	PB-DZ-Z	5120-960-4058	114E5811-10	77272	DRIFT ASSEMBLY,ROLLER BEARING	ABC	EA	V					*	A10	3
	XA----Z		114E5811-1	77272	DRIFT.....	ABC		V						A10	
	PB-DZ-Z	5120-886-1523	114E5812-1	77272	DRIFT.....	ABC	EA	V					1	A10	4
	PB-DZ-Z	4920-010-7445	114GS027-1	77272	MANIFOLD,ADAPTER.....	ABC	EA	V					1	A10	5
	PB-DZ-Z	4920-917-2147	114GS004-1	77272	MANIFOLD,SUBPLATE.....	ABC	EA	V					*	A10	5

(1) SMR CODE	(2) FEDERAL STOCK NUMBER	(3) DESCRIPTION REFERENCE NUMBER & MFR CODE			USABLE ON CODE CH-47	(4) UNIT OF MEAS	(5) QTY INC IN UNIT	(6) 30-DAY DS GS MAINT ALW (a) 1-20	(b) 21-50	(c) 51-100	(7) 1 YR ALWPER 100 EQUIP CNTGCY	(8) DEPOT MAINT ALWPER 100 EQUIP	(9) ILLUSTRATION (a) FIG NO	(b) ITEM NO
		FUNCTIONAL GROUP - 40	AIRFRAME TOOLS											
PB-FZ-Z	5120-917-1020	114E5814-7	77272	PULLER,MECHANICAL.....	ABC	EA	V	1	1	1		1	A10	6
PB-DZ-Z	5120-923-2490	114G1081-1	77272	GUIDE,INSTALLING.....	ABC	EA	V					1	A10	7
PB-OZ-Z	5120-866-6102	SK15241-15	40912	DRIFT,KNUCKLE PIN.....	ABC	EA	1	1	1	1		1	A10	
PB-OZ-Z	5120-905-5477	SK15241-21	40912	PUNCH,DRIVE PIN-STRAIGHT..... 1 IN.LG,0.365 IN.DIA	ABC	EA	1	1	1	1		1	A10	
PB-OZ-Z	5120-888-8000	TMRX10	55719	CROWFOOT ATTACHMENT.....	ABC	EA	V	*	*	*		*	A10	
PB-OZ-Z	4330-076-6021	ADHT6814M9716M	01414	FILTER,FLUID.....	ABC	EA	V	1	1	1		1	A10	
PB-OZ-Z	4920-503-6088	AC9516F1	01414	.FILTER ELEMENT ASSEMBLY.....	ABC	EA	V	*	*	*		*	A10	
PA-OZ-Z	4720-867-8944	680-16-0360	00624	.HOSE ASSEMBLY.....	A	EA	1	1	1	1		1	A10	
PB-FZ-Z	5120-944-2526	114E5815-7	77272	PULLER ASSEMBLY.....	A	EA	V	1	1	1		1	A11	1
PB-FZ-Z	5120-864-0515	114E5816-1	77272	WRENCH ASSEMBLY.....	A	EA	1	*	*	*		*	A11	2
PB-FZ-Z	5120-886-1524	114E5817-1	77272	DRIFT.....	ABC	EA	V	1	1	1		1	A11	3
PB-HZ-Z	5120-891-1370	114G1201-1	77272	DRIFT,BEARING.....	ABC	EA	V	*	*	*		*	A11	4
PB-HZ-Z	4920-936-5537	114GS221-1	77272	TEST FIXTURE,MANIFOLD.....	ABC	EA	V	1	1	1		1	A11	5
PB-DZ-Z	5120-886-1526	114E5821-1	77272	WRENCH ASSEMBLY.....	ABC	EA	V					1	A11	6
XB-DZ-Z		114E5821-4	77272	.LUG,SPANNER WRENCH.....	ABC	EA	V						A11	
PB-DZ-Z	4920-476-0238	T186078	62983	ADAPTER,POWER ARM.....	ABC	EA	V					*	A11	7
XB-DZ-Z		114E5994-1	77272	PULLER ASSEMBLY,RETAINER.....	A	EA	1						A11	8
PB-FZ-Z	4920-879-3045	114G1102-11	77272	FIXTURE PITCH LINK.....	BC	EA	V	1	1	1		1	A11	9
N PB-FB-Z	4920-947-3510	114G1102-1	77272	FIXTURE,PITCH LINK SETTING...	A	EA	V	*	*	*			A11	9
PB-DZ-Z	5120-900-8472	114E5822-2	77272	WRENCH,SPANNER-NONADJUSTABLE. 8.200 IN.DIA OF OPENING, SINGLE END,17.760 O/A LG	ABC	EA	V					1	A12	1
XB-DZ-Z		114E5822-4	77272	.LUG,SPANNER WRENCH.....	ABC	EA	V						A12	
PB-FZ-Z	5120-867-5501	114E5824-4	77272	PLUG SET,GUIDE SEAL.....	ABC	EA	V	1	1	1		1	A12	2
XA----Z		114E5824-5	77272	.PLUG SET,GUIDE SEAL.....	ABC		V						A12	
XA----Z		114E5824-6	77272	.PLUG SET,GUIDE SEAL.....	ABC		V						A12	
PB-DZ-Z	4920-917-7096	T108683	62983	RING,AIR GAGE PUMP.....	ABC	EA	V					*	A12	3
XB-DZ-Z		T230339	62983	MASTER RING.....	ABC	EA	V						A12	3
PB-DZ-Z	5220-762-6853	114GS063-1	77272	GAGE,RING PLAIN.....	ABC	EA	V					1	A12	3
PB-DZ-Z	4920-904-2447	T232843	62983	RING,AIR GAGE.....	ABC	EA	V					*	A12	3
PB-DZ-Z	4920-917-7097	T108684	62983	RING,AIR GAGE.....	ABC	EA	V					1	A12	3
PB-DZ-Z	5220-229-2905	T400982	62983	GAGE,RING.....	ABC	EA	V					*	A12	3
PB-DZ-Z	5220-229-2906	T400983	62983	GAGE,RING.....	ABC	EA	V					*	A12	3
PB-HZ-Z	5220-986-1146	T215572	77272	GAGE,CHECKING.....	ABC	EA	V	1	1	1		1	A12	3
PB-DZ-Z	5120-886-1528	114E5826-1	77272	WRENCH,SPANNER.....	ABC	EA	V					1	A12	4
PB-DZ-Z	5120-733-2507	114E5827-5	77272	SOCKET,WRENCH,FACE SPANNER... 4 PRONGS,0.168 IN.W, 7/16 IN.LG,33/64 IN.SQ FEMALE DRIVE,2-1/2 IN.OD	ABC	EA	V					1	A12	5
PB-DZ-Z	5120-168-2237	114GS126-1	77272	REPLACER,OIL SEAL.....	ABC	EA	V					1	A12	7
PB-HZ-Z	4320-861-3148	T222801	62983	PLUG,TESTING MOTOR.....	ABC	EA	V	1	1	1		1	A12	8

(1) SMR CODE	(2) FEDERAL STOCK NUMBER	(3) DESCRIPTION — REFERENCE NUMBER & MFR CODE		USABLE ON CODE	(4) UNIT OF MEAS	(5) QTY INC IN UNIT	(6) 30-DAY DS GS MAINT ALW (a) 1-20	(b) 21-50	(c) 51-100	(7) 1 YR ALWPER 100 EQUIP CNTGCY	(8) DEPOT MAINT ALWPER 100 EQUIP	(9) ILLUSTRATION (a) FIG NO	(b) ITEM NO
		FUNCTIONAL GROUP - 40 AIRFRAME TOOLS		CH-47									
PB-DZ-Z	5120-886-1508	114E5829-1	77272 PUSHER	ABC	EA	V					*	A13	1
XB-DZ-Z		114E5830-25	77272 PULLER AND DRIFT ASSEMBLY	ABC	EA	V						A13	2
XB-DZ-Z		114G1085-1	77272 FIXTURE,HOLDING	ABC	EA	V						A13	3
PB-DZ-Z	4920-923-1984	114G1070-1	77272 JIG,DRILL	ABC	EA	V						A13	3
PB-DZ-Z	5120-864-0520	114E5833-1	77272 SPLIT PLATE ASSEMBLY	ABC	EA	V					*	A13	3
PB-DZ-Z	5120-886-1510	114E5834-1	77272 PUSHER ASSEMBLY	ABC	EA	V					1	A13	5
C XB-HZ-H		AT3281	77272 FIXTURE,PINNING	A	EA	V					1	A13	6
												A13	7
PB-DZ-Z	5120-864-0521	114E5835-1	77272 PULLER ASSEMBLY	ABC	EA	V							
PB-DZ-Z	4920-863-5764	114E5836-1	77272 SPLIT PLATE ASSEMBLY	ABC	EA	V					*	A14	1
PB-DZ-Z	5120-864-0522	114E5837-1	77272 WRENCH ASSEMBLY	ABC	EA	V					*	A14	2
PB-DZ-Z	5120-864-0523	114E5838-1	77272 PUSHER	ABC	EA	V					1	A14	3
PB-FZ-Z	4920-808-5737	114G1369-1	77272 DRILL,JIG	ABC	EA	V					1	A14	4
PB-HZ-Z	4920-944-2561	AMF11-0172-1-2	93712 FIXTURE,ASSEMBLY	ABC	EA	V	1	1	1		1	A14	5
PB-DZ-Z	4920-135-4629	QB75604-1	19315 PUSHER,BEARING	ABC	EA	V	*	*	*		*	A14	6
PB-HZ-Z	5120-570-3141	T210296	62983 PROTECTOR,CYLINDER	ABC	EA	V					*	A14	7
							*	*	*		*	A14	8
PB-DZ-Z	4920-854-4507	114E5841-1	77272 SPLIT PLATE ASSEMBLY	ABC	EA	V							
PB-DZ-Z	5120-864-0524	114E5842-1	77272 PULLER ASSEMBLY	ABC	EA	V					1	A15	1
PB-DZ-Z	4920-923-1980	114G1089-1	77272 ADAPTER,SPINDLE BLADE	ABC	EA	V					1	A15	2
PB-DZ-Z	5120-073-3329	114E5844-5	77272 WRENCH ASSEMBLY-ENGINE TRANSMISSION	AB	EA	V					*	A15	3
XB-DZ-Z		114E5846-1									1	A15	4
C XB-DB-Z		114G1140-1	77272 PUSHER	ABC	EA	V							
XB-DZ-Z		114G1140-13	77272 WRENCH ASSEMBLY,LOCK	ABC	EA	V						A15	6
PB-DZ-Z	4920-929-3679	114G1141-1	77272 .LUG,SOCKET FACE SPANNER	ABC	EA	V						A15	7
			77272 WRENCH ASSEMBLY,ENGINE USBL EFF 65-7966 & SUBSEQUENT	AB	EA	V						A15	
XB-DZ-Z		114E5825-1									1	A15	7
PB-DZ-Z	4920-929-3680	114G1142-1	77272 WRENCH ASSEMBLY	ABC	EA	V							
PB-DZ-Z	5120-248-1265	114G1301-1	77272 WRENCH ASSEMBLY,ENGINE	AB	EA	V						A15	7
			77272 WRENCH ASSEMBLY,GEAR	C	EA	V					*	A15	7
											1	A15	7
PB-DZ-Z	5120-248-5006	114E5847-6	77272 DRIVER ASSEMBLY,PINION	AB	EA	V							
PB-DZ-Z	4920-916-1913	114E5849-10	81205 PLATE ASSEMBLY	AB	EA	V					*	A16	1
XB-DZ-Z		114G1090-2	77272 FIXTURE,GRINDING	AB	EA	V					*	A16	2
PB-DZ-Z	4920-917-1873	T198639	62983 SPINDLE,AIR GAGE	ABC	EA	V						A16	3
PB-DZ-Z	5120-073-3330	114E5923-6	77272 WRENCH ASSEMBLY	ABC	EA	V					1	A16	4
PB-HZ-Z	5120-606-5973	T205318	62983 GUIDE,SHAFT SEAL	ABC	EA	V					1	A16	5
C PB-HZ-H	4920-944-2584	T7334	93712 FIXTURE,CLUTCH	ABC	EA	V	1	1	1		1	A16	6
XB-HZ-Z		114GS169-1	77272 FIXTURE,BRUSH ALIGNING	A	EA	1	1	1	1		1	A16	7
												A16	8

	(1) SMR CODE	(2) FEDERAL STOCK NUMBER	(3) DESCRIPTION REFERENCE NUMBER & MFR CODE			USABLE ON CODE	(4) UNIT OF MEAS	(5) QTY INC IN UNIT	(6) 30-DAY DS/GS MAINT ALW (a) 1-20	(b) 21-50	(c) 51-100	(7) 1-YR ALW PER 100 EQUIP CNTGCY	(8) DEPOT MAINT ALW PER 100 EQUIP	(9) ILLUSTRATION (a) FIG NO	(b) ITEM NO
			FUNCTIONAL GROUP - 40 AIRFRAME TOOLS			CH-47									
	PB-DZ-Z	4920-136-2349	114G1314-1	77272	CLAMP,TORQUE GEAR.....	C	EA	V					1	A17	1
	PB-DZ-Z	5120-908-9139	114E5857-14	77272	PULLER ASSEMBLY,HOUSING.....	AB	EA	V					1	A17	2
	PB-HZ-Z	4920-997-8823	AT1901-6	81039	PULLEY,MOTOR TEST.....	A	EA	V	*	*	*		*	A17	3
C	XB-DB-D		114G1242-1	77272	FIXTURE,LOCATING.....	ABC	EA	V						A17	4
	XB-DZ-Z		114G5009-1	77272	.FIXTURE,LOCATING.....	ABC	EA	V						A17	
	PB-DZ-Z	5120-886-1517	114E5861-1	77272	WRENCH,SPANNER.....	ABC	EA	V					1	A17	5
	PB-HZ-Z	5120-215-4325	114E5895-1	77272	WRENCH,SPANNER.....	ABC	EA	V	1	1	1		1	A17	5
	PB-DZ-Z	5120-864-0528	114E5862-1	77272	PULLER ASSEMBLY.....	ABC	EA	V					*	A17	6
	PB-DZ-Z	4920-410-4627	114E5863-4	77272	DRIFT ASSEMBLY.....	AB	EA	V					1	A18	1
	PB-DZ-Z	5120-864-0530	114E5864-1	77272	DRIFT ASSEMBLY.....	ABC	EA	V					*	A18	2
	PB-DZ-Z	4920-863-5768	114E5865-1	77272	SPLIT PLATE ASSEMBLY.....	AB	EA	V					*	A18	3
	PB-DZ-Z	5120-886-1518	114E5866-1	77272	DRIFT.....	ABC	EA	V					1	A18	4
	PA-DZ-Z	5120-927-9505	114E5870-9	77272	PULLER ASSEMBLY.....	ABC	EA	V					1	A18	5
N	PB-HZ-Z	4920-904-2455	30015	25204	PLUG,ORIFICE,FILTER ASSEMBLY. HYDRAULIC	ABC		V	*	*	*		*	A18	6
N	PB-HZ-Z	4920-904-2452	30004	25204	PLUG,SHUT-OFF VALVE,FILTER... ASSEMBLY HYDRAULIC	ABC		V	*	*	*		*	A18	7
	PB-DZ-Z	4920-923-0573	114G1097-1	77272	SLEEVE,PROTECTIVE,ALUMINUM...	ABC	EA	V					*	A19	1
	PB-DZ-Z	5120-929-3678	114E5876-19	77272	WRENCH ASSEMBLY,AFT..... TRANSMISSION	ABC	EA	V					1	A19	3
	PB-DZ-Z	5120-927-9502	114E5876-29	77272	.LUG,SOCKET,FACE SPANNER.....	ABC	EA	V					1	A19	
	PB-DZ-Z	5120-960-4070	114E5877-3	77272	WRENCH ASSEMBLY.....	ABC	EA	V					*	A19	4
N	PB-HZ-Z	4920-916-6163	30010	25204	FIXTURE,HOUSING,TEST,FILTER.. ASSEMBLY HYDRAULIC	ABC	EA	V	*	*	*		*	A19	5
	PB-DZ-Z	5120-923-2450	114G1123-1	77272	SOCKET,WRENCH,FACE SPANNER...	ABC	EA	V					1	A20	1
	XB-DZ-Z		114G1123-5	77272	.LUG,WRENCH ASSEMBLY.....	ABC	EA	V						A20	
	PB-DZ-Z	4920-136-1273	QB71485-6	19315	PUNCH,PINION.....	ABC	EA	V					*	A20	2
	PB-HZ-Z	4920-944-2562	IF11-0200-1	93712	FIXTURE ASSEMBLY.....	ABC	EA	V	*	*	*		*	A20	3
	PB-DZ-Z	5120-462-3143	114G1128-14	77272	WRENCH ASSEMBLY,TRANSMISSION.	ABC	EA	V					1	A20	4
	XB-DZ-Z		114G1128-13	77272	.LUG,WRENCH ASSEMBLY.....	ABC	EA	V						A20	
	PB-DZ-Z	5120-864-0535	114E5885-1	77272	PULLER ASSEMBLY.....	ABC	EA	V					1	A20	5
	PB-DZ-Z	4920-984-5342	114E5886-10	77272	SPLIT PLATE ASSEMBLY.....	ABC	EA	V					*	A20	6
	PB-HZ-Z	4920-929-3671	114G1147-1	77272	TEST BLOCK ASSEMBLY.....	AB	EA	V						A20	8
	PB-HZ-Z	4920-929-3672	114G1148-1	77272	TEST BLOCK ASSEMBLY.....	AB	EA	V	*	*	*		*	A20	8

	(1) SMR CODE	(2) FEDERAL STOCK NUMBER	(3) DESCRIPTION — REFERENCE NUMBER & MFR CODE			USABLE ON CODE	(4) UNIT OF MEAS	(5) QTY INC IN UNIT	(6) 30-DAY DS/GS MAINT ALW (a) 1-20	(b) 21-50	(c) 51-100	(7) 1-YR ALWPER FOR EQUIP CNTGCY	(8) DEPOT MAINT ALWPER FOR EQUIP	(9) ILLUSTRATION a. FIG NO	b. ITEM NO
			FUNCTIONAL GROUP - 40 AIRFRAME TOOLS			CH-47									
	XB-DZ-Z		114E5887-10	77272	PLATE,SPLIT.....	ABC	EA	V						A21	1
	PB-DZ-Z	5120-955-9649	114E5934-2	77272	WRENCH,SPANNER.....	ABC	EA	V					*	A21	3
	XB-DZ-Z		114E5934-4	77272	.LUG,SOCKET WRENCH.....	ABC	EA	V						A21	
N	PB-DZ-Z	4920-924-7725	114G1090-1	77272	FIXTURE,GRINDING.....	AB	EA	V					*	A21	4
	XB-DZ-Z		114G1318-1	77272	FIXTURE,GRINDING.....	C	EA	V						A21	4
C	PB-DB-Z	4920-924-7731	114G1099-1	77272	FIXTURE,HOLDING.....	AB	EA	V					*	A21	4
C	XB-DB-Z		114G1099-2	77272	.FIXTURE,GRINDING.....	AB	EA	V						A21	
	PB-HZ-Z	4920-911-9196	114G1149-1	77272	TEST BLOCK ASSEMBLY.....	AB	EA	V	1	1	1		1	A21	5
	XB-DZ-Z		114E5890-7	77272	SPLIT PLATE ASSEMBLY.....	ABC	EA	V						A22	1
	PB-DZ-Z	4920-863-5779	114E5891-1	77272	SPLIT PLATE ASSEMBLY.....	ABC	EA	V					*	A22	2
	XB-DZ-Z		114E5892-9	77272	SPLIT PLATE ASSEMBLY,BEARING.	ABC	EA	V						A22	2
	PB-HZ-Z	4920-790-2960	AT2037	81039	INDICATOR ASSEMBLY.....	A	EA	V	*	*	*		*	A22	3
N	PB-HZ-Z	4920-997-6285	AT2037-8	81039	BUSHING,ACTUATOR USED IN.... CONJUNCTION WITH AT2037	A	EA	V	*	*	*		*	A22	4
C	PB-FZ-Z	5120-755-6697	114E5896-14	77272	SOCKET WRENCH.....	ABC	EA	V	1	1	1		1	A22	5
	PB-FZ-Z	5120-253-1563	114E5896-11	77272	.LUG,WRENCH,ROTOR.....	ABC	EA	V	*	*	*		*	A22	
	PB-FZ-Z	4920-917-7107	114E5898-5	77272	ADAPTER SET,ROTOR HUB.....	ABC	EA	V	1	1	1		1	A22	6
	PB-FZ-Z	5120-917-1764	114E5898-6	77272	.SOCKET ASSEMBLY.....	ABC	EA	V	1	1	1		1	A22	
	PB-FZ-Z	4920-917-7102	114E5898-7	77272	.PLATE,HOLDING,MOTOR.....	ABC	EA	V	1	1	1		1	A22	
	PB-FZ-Z	4920-917-7103	114E5898-8	77272	.PLATE,HOLDING,MOTOR.....	ABC	EA	V	1	1	1		1	A22	
	PB-DZ-Z	4920-410-4628	114G1312-1	77272	FIXTURE,BACKLASH.....	C	EA	V						A23	1
	PB-DZ-Z	5120-179-3558	QB75603-1	19315	WRENCH,SOCKET.....	ABC	EA	V					*	A23	2
	PB-DZ-Z	4920-928-6235	114E5901-9	77272	TORQUE PLATE ASSEMBLY.....	ABC	EA	1					*	A23	3
	PB-HZ-Z	5180-411-8433	114G1331-1	77272	STAKING TOOL.....	BC	EA	V	1	1	1		1	A23	4
	PB-DZ-Z	5120-772-7157	T237014	62983	DRIVER,BEARING.....	ABC	EA	V					*	A23	5
	PB-DZ-Z	5120-864-0536	114E5904-1	77272	PUSHER SET.....	ABC	EA	V					1	A23	6
	PB-DZ-Z	5120-072-8354	114E5818-2	77272	WRENCH,SPANNER.....	ABC	EA	V					*	A23	7
	PB-HZ-Z	5120-839-0719	114G1186-1	77272	WRENCH,LOWER BEARING.....	ABC	EA	1	1	1	1		1	A24	1
	PB-DZ-Z	4920-757-2870	114G1029-1	77272	ADAPTER ASSEMBLY,TORQUE.....	ABC	EA	V					1	A24	3
	PB-DZ-Z	5120-927-9504	114G1180-1	77272	SOCKET,WRENCH,FACE SPANNER...	ABC	EA	V					1	A24	4
	XB-DZ-Z		114G1180-3	77272	.LUG,WRENCH ASSEMBLY.....	ABC	EA	V						A24	
	PB-DZ-Z	4920-872-6129	114E5908-7	77272	TORQUE PLATE ASSEMBLY.....	ABC	EA	V					*	A24	5
	PB-HZ-Z	4920-628-2575	AT916	81039	BASE,MOTOR HOLDING.....	A	EA	1	*	*	*		*	A24	6
	PB-HZ-Z	4920-997-6284	AT1061-9	81039	.ADAPTER,ACTUATOR.....	A	EA	V	*	*	*		*	A24	

	(1) SMR CODE	(2) FEDERAL STOCK NUMBER	(3) DESCRIPTION — REFERENCE NUMBER & MFR CODE			USABLE ON CODE CH-47	(4) UNIT OF MEAS	(5) QTY INC IN UNIT	(6) 30-DAY DS/GS MAINT ALW (a) 1-20	(b) 21-50	(c) 51-100	(7) 1-YR ALWPER 100 EQUIP CNTGCY	(8) DEPOT MAINT ALWPER 100 EQUIP	(9) ILLUSTRATION (a) FIG NO	(b) ITEM NO
			FUNCTIONAL GROUP - 40 AIRFRAME TOOLS												
	PB-DZ-Z	5120-832-2667	T232245	62983	PLATE,BEARING.....	A	EA	1					*	A25	2
	PB-DZ-Z	4920-917-1965	75800T9	75250	FIXTURE,TEST,SOLENOID VALVE..	ABC	EA	V					1	A25	3
	PB-DZ-Z	4920-875-1450	114E5919-1	77272	SPLIT PLATE,DRIVE MECHANISM.. ASSEMBLY,AFT TRANSMISSION	ABC	EA	V					1	A25	4
	PB-DZ-Z	4920-876-0114	114E5920-1	77272	TORQUE PLATE ASSEMBLY.....	ABC	EA	V					*	A25	5
	PB-DZ-Z	4920-870-3885	114E5922-1	77272	TORQUE PLATE ASSEMBLY.....	ABC	EA	V					*	A25	6
	PB-DZ-Z	4920-876-0113	114E5910-1	77272	TORQUE PLATE ASSEMBLY.....	ABC	EA	V					*	A25	6
C	PB-DB-D	4920-936-5536	114G1197-1	77272	FIXTURE,HOLDING,PIT.....	A	EA	V					*	A25	7
C	PB-DD-Z	5120-832-2668	T232286	62983	PLATE,BEARING REMOVER.....	ABC	EA	V					*	A26	1
	XB-DZ-Z		114E5925-5	77272	TORQUE PLATE ASSEMBLY.....	AB	EA	V						A26	2
	PB-DZ-Z	4920-928-6234	114E5969-1	77272	TORQUE PLATE ASSEMBLY.....	ABC	EA	V					1	A26	3
	PB-DZ-Z	4920-757-7149	114E5928-13	77272	TORQUE PLATE ASSEMBLY.....	AB	EA	V					*	A26	4
	XB-DZ-Z		114G1098-1	77272	INSTALLING TOOL.....	ABC	SE	V						A26	5
	PB-DZ-Z	4920-876-0116	114E5932-1	77272	TORQUE PLATE ASSEMBLY.....	ABC	EA	V					*	A26	6
	PB-DZ-Z	4920-738-6813	114E5933-9	77272	TORQUE PLATE ASSEMBLY.....	ABC	EA	V					*	A26	7
C	PB-HZ-Z	5220-986-1135	T198444	62983	SPINDLE,CHECKING.....	BC	EA	1	1	1	1		1	A27	1
C	PB-DB-Z	4920-984-5344	114E5935-12	77272	LOCK TORQUE PLATE ASSEMBLY...	ABC	EA	V					1	A27	2
	PB-DZ-Z	4920-463-4790	114G1319-1	77272	FIXTURE,BACKLASH.....	C	EA	V					1	A27	3
	PB-FZ-Z	5120-879-3710	114G1236-1	77272	PULLER ASSEMBLY,BEARING PITCH	BC	EA	V	1	1	1		1	A27	4
	PB-HZ-Z	4920-946-6941	AT1890	81039	FIXTURE,MOUNT.....	ABC	EA	V	*	*	*		*	A27	5
	PB-DZ-Z	4920-443-1122	114G1320-1	77272	SPLIT PLATE ASSEMBLY.....	C	EA	V					1	A27	6
	PB-HZ-Z	4920-946-6940	AT1890-7	81039	ADAPTER,TEST.....	ABC	EA	V	1	1	1		1	A27	7
	PB-DZ-Z	5120-962-9671	114G1154-1	77272	WRENCH,SPANNER.....	ABC	EA	V					*	A27	8
	PB-HZ-Z	4920-997-6288	AT2652-4	81039	ADAPTER,TEST AIR SEAL.....	ABC	EA	V	*	*	*		*	A27	9
	PB-DZ-Z	4920-936-5534	114E5936-25	77272	TORQUE ADAPTER ASSEMBLY.....	AB	EA	V					1	A27	10
	PB-DZ-Z	4920-443-1119	114E5940-9	77272	TORQUE PLATE ASSEMBLY.....	ABC	EA	V					1	A28	1
	PB-FZ-Z	1730-073-3326	114E5941-18	77272	RIGGING SET,COCKPIT CONTROLS.	ABC	EA	V	1	1	1		1	A28	2
	PB-DZ-Z	5120-940-0992	T300055	62983	ADAPTER,BEARING.....	ABC	EA	V					*	A28	3
	PB-DZ-Z	4920-435-7839	TES7785	62982	VACUUM ADAPTER.....	ABC	EA	V					*	A28	4
	PB-HZ-Z	4920-946-6987	114GS168-1	77272	FIXTURE,BACKLASH CHECKING....	ABC	EA	V	*	*	*		*	A28	5
	PB-FZ-Z	4920-522-3784	114G1373-1	77272	FIXTURE,LOCATING.....	ABC	EA	V	1	1	1		1	A28	7
	PB-DZ-Z	5120-177-9525	QB75621-1	19315	PUNCH,PISTON DISASSEMBLY.....	ABC	EA	V					1	A28	
	PB-HZ-Z	4920-934-8407	AT2103	81039	LOAD CHECK PULLEY.....	ABC	EA	V	1	1	1		1	A28	8

(1) SMR CODE	(2) FEDERAL STOCK NUMBER	(3) DESCRIPTION REFERENCE NUMBER & MFR CODE			USABLE ON CODE	(4) UNIT OF MEAS	(5) QTY INC IN UNIT	(6) 30-DAY DS GS MAINT ALW (a) 1-20	(b) 21-50	(c) 51-100	(7) 1YR ALWPER 100 EQUIP ONTGOY	(8) DEPOT MAINT ALWPER 1Y EQUIP	(9) ILLUSTRATION (a) FIG NO	(b) ITEM NO
		FUNCTIONAL GROUP - 40 AIRFRAME TOOLS			CH-47									
PB-FZ-Z	4920-963-6865	114E5991-1	77272	DRIVE LOCK ASSEMBLY,BOLT..... TRANSMISSION	ABC	EA	V	1	1	1		1	A29	1
PB-HZ-Z	4920-946-7003	AT3042	81039	ARM,LOAD TEST.....	ABC	EA	V	*	*	*		*	A29	2
PB-DZ-Z	5120-940-0993	T238704	62983	GUIDE,FLANGE BEARING.....	ABC	EA	V					*	A29	3
PB-DZ-Z	5120-958-5418	T242963	62983	DRIVER,BUSHING.....	ABC	EA	V					*	A29	4
PB-HZ-Z	5210-086-3469	114GS215-1	62983	WRENCH,SPANNER.....	ABC	EA	V					*	A29	5
PB-DZ-Z	5220-758-8542	114GS062-1	77272	GAGE,THIMBLE.....	ABC	EA		*	*	*		*	A29	6
PB-DZ-Z	4920-674-0174	T228563	77272	GAGE,AIR SPINDLE.....	ABC	EA	V					*	A29	7
PB-HZ-Z	4920-909-7262	T105679	62983	FIXTURE,BEARING REMOVAL.....	ABC	EA	V					1	A29	8
PB-HZ-Z	4920-936-5533	114GS177-1	62983	PLATE,BEARING REMOVER.....	ABC	EA	V	*	*	*		*	A29	8
			77272	AIR SEAL TEST PANEL.....	ABC	EA	V	1	1	1		1	A29	9
PB-DZ-Z	5120-464-1813	114E5848-12	77272	PULLER,BEARING.....	AB	EA	V							
PB-DZ-Z	5120-871-8771	114E5875-3	77272	SOCKET ASSEMBLY,FACE..... SPANNER WRENCH	ABC	EA	V					1	A30	1
XB-DZ-Z		114E5875-4	77272	SOCKET,WRENCH,FACE SPANNER..	ABC	EA	V					*	A30	2
PB-DZ-Z	4920-917-1970	114GS010-1	77272	FIXTURE,TEST,SOLENOID.....	ABC	EA	1						A30	
PB-DZ-Z	4920-927-1256	TES7734	62983	FIXTURE,HOLDING,HYDRAULIC.... MOTOR	ABC	EA						1	A30	3
PB-FZ-Z	4920-134-4534	114G1408-1	77272	CABLE ASSEMBLY AND BAG,TEST.. VIBRATION ABSORBER	C	EA	V	1	1	1		*	A30	4
PB-HZ-Z	5210-226-5896	12C30	89513	GAGE FEELER.....	ABC	EA	V	1	1	1		1	A30	5
PB-DZ-Z	4920-874-2553	T237121	62983	ROD,GUIDE MOTOR HYDRAULIC....	ABC	EA	V					1	A30	6
PB-DZ-Z	4920-995-2544	TES6917	62983	INSTALLING TOOL.....	AB	EA	V					1	A30	7
PB-DZ-Z	4920-874-2552	T237122	62983	WRENCH,DRIVER.....	ABC	EA	V					*	A30	8
												*	A30	9
PB-HZ-Z	5220-874-7760	T191819	62983	SPINDLE,AIR GAGE.....	ABC	EA	V	*	*	*		*	A31	1
XB-DZ-Z		114GS060-1	77272	GUIDE,RING PUMP.....	ABC	EA	V						A31	2
PB-HZ-Z	5990-757-7189	1489406-1	02987	ADAPTER,SYNCHRO.....	A	EA	1	*	*	*		*	A31	3
C PB-DZ-Z	4920-995-2517	7300565	62983	RING,BEARING,REMOVER.....	AB	EA	V					*	A31	4
PB-DB-Z	4920-997-4714	114G1166-1	77272	FIXTURE,DRILL.....	A	EA	V					*	A31	5
PB-DZ-Z	4920-993-5116	114G1167-1	77272	DRILL FIXTURE,DOUBLER,TIP...	A	EA	V					1	A31	5
PB-DZ-Z	4935-757-5867	114GS075-1	77272	HOLDING FIXTURE.....	ABC	EA	V					*	A31	7
PB-DZ-Z	4920-874-2550	T237776	62983	ADAPTER,SHAFT.....	ABC	EA	V					1	A31	7
PB-DZ-Z	4920-874-2547	T246396	62983	FIXTURE.....	ABC	EA	1					1	A31	8
PB-DZ-Z	4920-874-2559	T246993	62983	TOOL ALIGNMENT FIXTURE.....	ABC	EA	V					1	A31	9
PB-DZ-Z	4920-981-9156	T246992	62983	CENTER SHAFT AND PINION.....	ABC	EA	V					*	A31	9
PB-DZ-Z	5220-909-2080	114GS080-1	77272	GAGE,END PLAY.....	ABC	EA	V					1	A31	9
PB-DZ-Z	4920-917-7106	114E5945-15	77272	FIXTURE,TRANSMISSION.....	ABC	EA	V					1	A32	1
PB-DZ-Z	4920-874-2540	114GS102-1	77272	GUIDE.....	ABC	EA	V					1	A32	2

	(1) SMR CODE	(2) FEDERAL STOCK NUMBER	(3) DESCRIPTION REFERENCE NUMBER & MFR CODE			USABLE ON CODE CH-47	(4) UNIT OF MEAS	(5) QTY INC IN UNIT	(6) 30-DAY DS/GS MAINT ALW (a) 1-20	(b) 21-50	(c) 51-100	(7) 1-YR ALWPER 100 EQUIP CNTGCY	(8) DEPOT MAINT ALWPER 100 EQUIP	(9) ILLUSTRATION (a) FIG NO	(b) ITEM NO
			FUNCTIONAL GROUP - 40 AIRFRAME TOOLS												
	PB-DZ-Z	5340-771-7198	T236152	62983	SLEEVE,GUIDE.....	ABC	EA	V					*	A32	3
	PA-FZ-Z	5340-921-5734	34033-45	99879	SPACER,SLEEVE.....	A	EA	2	*	*	*		*	A32	5
	PB-FZ-Z	5120-775-1849	SWE101	87641	MULTIPLIER,TORQUE WRENCH..... END DRIVE,W/ADAPTER, W/DETACHABLE ARM,3/4 IN. SIZE,FEMALE DRIVE,W/O CASE	ABC	EA	V	1	1	1		1	A32	
	PB-DZ-Z	5120-446-2858	T300561	62983	DRIVER,BEARING AND BUSHING...	AB	EA	V					1	A32	6
C	XB-DB-D		114G1160-16	77272	FIXTURE,CHECKING CLUTCH.....	ABC	EA	V						A32	7
	PB-FZ-Z	5220-587-3408	114G1205-2	77272	GAGE ASSEMBLY,GEAR.....	AB	EA	V	1	1	1		1	A33	1
	PB-FZ-Z	5220-131-6393	114G1205-22	77272	GAGE,SPLINE USE ON..... 67-18494 AND SUBSEQUENT	C	EA	V	1	1	1		1	A33	1
	MH-HZ-Z		114E5975-1	77272	WRENCH,FLARE NUT,AFT..... LANDING GEAR	A		V						A33	3
	XB-DZ-Z		114E5959-1	77272	PULLER,MECHANICAL.....	ABC	EA	V						A33	4
	XB-DZ-Z		114E5976-4	77272	TORQUE PLATE ASSEMBLY.....	ABC	EA	V						A33	5
C	PB-DZ-D	1730-879-3060	114E5985-59	77272	RIGGING SET,MIXING CONTROLS..	ABC	EA	V	1	1	1		1	A33	6
	PB-FZ-Z	1730-760-3370	114E5985-10	77272	..PIN,RIGGING SET.....	ABC	EA	V	*	*	*		*	A33	
	PB-FZ-Z	1730-760-3371	114E5985-5	77272	..ROLL PLATE,RIGGING SET.....	ABC	EA	V	*	*	*		*	A33	
	PB-FZ-Z	1730-760-3372	114E5985-6	77272	..PITCH PLATE,RIGGING SET....	ABC	EA	V	*	*	*		*	A33	
	PB-FZ-Z	1730-760-3373	114E5985-7	77272	..PLATE ASSEMBLY,RIGGING.....	ABC	EA	V	*	*	*		*	A33	
	PB-FZ-Z	1730-760-3374	114E5985-8	77272	..YAW PLATE,RIGGING SET.....	ABC	EA	1	*	*	*		*	A33	
	PB-FZ-Z	1730-760-3375	114E5985-9	77272	..PIN,RIGGING SET.....	ABC	EA	V	*	*	*		*	A33	
	PB-FZ-Z	1730-760-3376	114E5985-4	77272	..THRUST PLATE,RIGGING SET...	ABC	EA	V	*	*	*		*	A33	
	PB-FZ-Z	1730-760-3377	114E5985-11	77272	..PIN,RIGGING.....	ABC	EA	V	*	*	*		*	A33	
	PB-HZ-Z	5120-329-6566	114GS217-1	77272	WRENCH,SOCKET.....	ABC	EA	V	1	1	1		1	A33	7
	XB-DZ-Z		114GS059-1	77272	FIXTURE,HYDRAULIC.....	ABC	EA	V						A34	1
	PB-HZ-Z	1730-919-2061	114G1008-53	77272	RIGGING TOOL,SWASHPLATE..... USBL EFF 59-4982 THRU 64-13131	A	EA	1	1	1	1		1	A34	2
	PB-DZ-Z	5120-916-5613	T300329	62983	PLATE,BEARING.....	ABC	EA	V					1	A34	4
C	PB-FB-Z	5180-168-2294	114G1014-11	77272	RIGGING,TOOL SET.....	C	EA	V	1	1	1		1	A34	5
	PB-FZ-Z	5180-761-2214	114G1014-1	77272	RIGGING TOOL SET USBL EFF... 59-4982 THRU 67-18493	AB	EA	V	1	1	1		1	A34	5
	PB-FZ-Z	1730-867-1252	114G1014-2	77272	.CLAMP ASSEMBLY,RIGGING..... TOOL,LEAD AND LAG	AB	EA	V	*	*	*		*	A34	
	PB-DZ-Z	5120-917-1246	114GS113-1	77272	DRIVER,BEARING.....	ABC	EA	V					1	A35	1
	PB-DZ-Z	5120-847-7528	114E5995-1	77272	PULLER ASSEMBLY,STATIONARY... GEAR	ABC	EA	V					1	A35	2
	PB-DZ-Z	4920-923-2391	114E5998-17	77272	FIXTURE,CHECKING ASSEMBLY....	ABC	EA	V					1	A35	3

	(1) SMR CODE	(2) FEDERAL STOCK NUMBER	(3) DESCRIPTION REFERENCE NUMBER & MFR CODE			USABLE ON CODE	(4) UNIT OF MEAS	(5) QTY INC IN UNIT	(6) 30-DAY DS/GS MAINT ALW (a) 1-20	(b) 21-50	(c) 51-100	(7) 1YR ALWPER 100 EQUIP CNTGCY	(8) DEPOT MAINT ALWPER 100 EQUIP	(9) ILLUSTRATION (a) FIG NO	(b) ITEM NO
			FUNCTIONAL GROUP - 40	AIRFRAME TOOLS		CH-47									
				CONTINUED											
				SWASHPLATE										A35	3
C	PB-DZ-Z	5120-062-9952	114GS120-1	77272	BEARING GUIDE	ABC	EA	V							
	PB-DZ-Z	5120-065-0971	75257T1	75250	TOOL,RECEIVER	ABC	EA	V					1	A35	4
	PB-DZ-Z	5120-963-9508	70001T19	75250	RECEIVER TOOL,INSTALLATION	ABC	EA	V					1	A35	5
	PB-DZ-Z	5120-062-9947	114GS121-1	77272	DRIVER ADAPTER	ABC	EA	V					1	A35	5
C	XB-DB-D		114G1101-2	77272	FIXTURE,BONDING	A	EA	V					1	A35	6
														A35	7
	PB-HZ-Z	5120-959-8289	70001T15	75250	REMOVAL TOOL,STRAINER	ABC	EA	V	*	*	*		1	A36	1
	PB-DZ-Z	5120-959-8666	70001T16	75250	REMOVAL TOOL,SLEEVE	ABC	EA	V					1	A36	3
	PB-DZ-Z	5120-910-3169	70001T8	75250	SLEEVE TOOL	ABC	EA	V					1	A36	3
	PB-DZ-Z	4920-066-3202	70001T12	75250	FIXTURE,JET SPRAY	ABC	EA	V					1	A36	4
C	PB-DZ-Z	5120-959-8759	70001T17	75250	WRENCH,SLEEVE,SERVO	ABC	EA	V					1	A36	5
C	PB-FB-Z	4920-954-5944	114G1039-55	77272	JIG TEST LAG	AB	EA	V	*	*	*		*	A36	6
	PB-FB-Z	4920-954-5923	114G1039-10	77272	.HOLDER,WATCH,TEST	AB	EA	V	*	*	*		*	A36	
	PB-FZ-Z	6645-179-2250	114G1039-99	77272	..STOP WATCH	ABC	EA	V	*	*	*		*	A36	
	PB-DZ-Z	4920-916-6167	114GS018-1	77272	FIXTURE,TORQUE MOTOR	ABC	EA	V					1	A36	7
	PB-DZ-Z	5120-959-8191	70001T1	75250	WRENCH,SPLINE EXTENSION	ABC	EA	V					1	A36	8
	PB-DZ-Z	5120-960-0156	70001T5	75250	ADAPTER,TORQUE WRENCH	ABC	EA	V					1	A37	1
	PB-DZ-Z	5120-963-1998	56632T1	75250	WRENCH,HYDRAULIC PUMP	ABC	EA	V					*	A37	2
	XB-DZ-Z		T300327	62983	RING,BEARING RETAINING	ABC	EA	V						A37	3
	PB-DZ-Z	4920-917-7092	T300328	62983	RING,BEARING RETAINING	ABC	EA	V					*	A37	3
	PB-DZ-Z	5120-963-9437	70001T6	75250	WRENCH,SLEEVE,SERVO	ABC	EA	V					1	A37	4
	PB-DZ-Z	5120-923-2452	114G1073-1	77272	PULLER,MECHANICAL	ABC	EA	V					1	A37	5
	PB-FZ-Z	1730-010-7462	114E5909-8	77272	RING ASSEMBLY,LIFTING	BC	EA	V	*	*	*		*	A37	6
					USBL EFF 67-18464 & SUBSEQUENT										
	PB-DZ-Z	4920-924-7729	114G1106-1	77272	FIXTURE,SET GRINDING	ABC	EA	V					*	A37	7
	PB-DZ-Z	4920-917-7109	114G1106-2	77272	FIXTURE,GRINDING	ABC	EA	1					*	A37	7
	PB-DZ-Z	5120-959-5458	T237778	62983	ADAPTER,HOLDING	ABC	EA	V					*	A38	1
	PB-FZ-Z	4920-522-3786	114G1393-1	77272	SWASHPLATE RIGGING USBL EFF. 64-13132 & SUBS	ABC	EA	V	1	1	1		1	A38	2
	PB-DZ-Z	4920-872-7884	114D3065-1DYBA1	77272	ADAPTER SUPPORT,BALANCING	ABC	EA	V					*	A38	3
	XB-DZ-Z		114D3048-4DYBA1	77272	ADAPTER SUPPORT,BALANCING	AB	EA	1						A38	4
	PB-DZ-Z	4920-420-5203	114G1088-6	77272	ADAPTER,SUPPORT,BALANCING	ABC	EA	V					*	A38	5
	PB-HZ-Z	4920-936-5538	114GS220-1	77272	TEST FIXTURE,MANIFOLD	ABC	EA	V	1	1	1		1	A38	6

	(1) SMR CODE	(2) FEDERAL STOCK NUMBER	(3) DESCRIPTION REFERENCE NUMBER & MFR CODE			USABLE ON CODE CH-47	(4) UNIT OF MEAS	(5) QTY INC IN UNIT	(6) 30-DAY DS/GS MAINT ALW (a) 1-20	(b) 21-50	(c) 51-100	(7) 1-YR ALWPER 100 EQUIP CNTGCY	(8) DEPOT MAINT ALWPER 100 EQUIP	(9) ILLUSTRATION (a) FIG NO	(b) ITEM NO
			FUNCTIONAL GROUP - 40 AIRFRAME TOOLS												
	PB-DZ-Z	5220-228-8822	T400981	62983	SPINDLE,AIR GAGE.....	ABC	EA	V					1	A39	1
	PB-FZ-Z	5120-944-2525	114E5813-6	77272	PULLER,MECHANICAL.....	ABC	EA	V	*	*	*		*	A39	2
	PB-DZ-Z	4920-944-2540	114E5981-1	77272	PUSHER ASSEMBLY,BEARING.....	AB	EA	V					*	A39	3
	XA----Z		114E5981-2	77272	.WELDMENT.....	ABC		V						A39	
	XA----Z		114E5981-6	77272	.PLATE.....	ABC		V						A39	
	PB-DZ-Z	4920-944-2539	114E5832-5	77272	STAND,BEARING REMOVER.....	ABC	EA	V					1	A39	4
	XB-DZ-Z		114E5832-6	77272	.PUSHER.....	ABC	EA	V						A39	
	XB-DZ-Z		114E5832-7	77272	.PUSHER.....	ABC	EA	V						A39	
	XB-DZ-Z		114E5832-8	77272	.SUPPORT ASSEMBLY,WELDMENT...	AB	EA	V						A39	
C	PB-DZ-Z	5120-847-7533	114E5956-10	77272	CLAMP ASSEMBLY,TAB.....	A	EA	V	1	1	1		1	A39	5
	PB-HZ-Z	4920-936-5539	114GS218-1	77272	TEST FIXTURE,BLANK.....	ABC	EA	V	1	1	1		1	A39	6
	PB-HZ-Z	5120-788-4822	T164177	62983	DRIVER.....	ABC	EA	V	*	*	1		1	A39	7
	PB-DZ-Z	4920-923-4395	114G1006-1	77272	PATTERN SET GEAR.....	ABC	SE	V					*	A40	2
	MD-DZ-Z		114G1104-1	77272	BAR,TORQUE.....	A		1						A40	3
	PB-DZ-Z	4920-572-7673	T180570	62983	FIXTURE,ARBOR PRESS.....	ABC	EA	V					1	A40	4
	XB-DZ-Z		50000T28	75250	SEAL,REMOVER.....	ABC	EA	V						A40	5
	PB-DZ-Z	4920-874-2538	T232865	62983	DRIVER,BEARING.....	ABC	EA	V					1	A40	7
	MD-DZ-Z		114G1122-1	77272	PLATE,INSTALLING.....	AB		V						A41	1
	PB-DZ-Z	4920-874-2539	T232863	62983	RING,BEARING REMOVABLE.....	ABC	EA	V					1	A41	2
	PB-DZ-Z	5120-940-0991	T300054	62983	ADAPTER SET,BEARING.....	ABC	EA	V					*	A41	2
	PB-HZ-Z	5120-839-0720	114G1187-1	77272	WRENCH,PISTON HEAD.....	ABC	EA	V	1	1	1		1	A41	5
C	PB-DB-Z	4920-943-0740	114G1068-1	77272	FIXTURE,DRILL.....	A	EA	V					*	A41	6
C	PB-DB-D	4920-939-8172	114G1061-1	77272	FIXTURE,CAMBER CHECK.....	A	EA	V					1	A42	1
C	PB-DZ-Z	5120-904-2476	70001T4	75250	WRENCH,PISTON,SERVO.....	ABC	EA	V					*	A42	2
	PB-DZ-Z	5120-772-7158	T216411	62983	MANDREL,BEARING.....	ABC	EA	V					1	A42	4
	PB-HZ-Z	5120-891-1368	114G1189-1	77272	PULLER,RELIEF AND SHUT-OFF...	ABC	EA	V	1	1	1		1	A42	5
	PB-DZ-Z	4920-106-2351	114G1207-1	77272	COMPRESSOR,PACKING.....	ABC	EA	V					1	A42	6
	PB-DZ-Z	5120-966-2177	70001T3	75250	PISTON TOOL,INSTALLATION.....	ABC	EA	V					1	A42	7
	PB-DZ-Z	4920-127-3155	114G1219-1	77272	FIXTURE,ALIGNMENT.....	ABC	EA	V					*	A43	1
	PB-DZ-Z	4920-107-4738	114G1220-1	77272	FIXTURE,ALIGNMENT.....	AB	EA	V					*	A43	2
C	XB-DD-D		114G1221-1	77272	FIXTURE,ALIGNMENT.....	AB	EA	V						A43	2
	XB-DZ-Z		114GS025-1	77272	FIXTURE,TEST.....	ABC	EA	V						A43	3
	PB-DZ-Z	4920-107-4737	114G1225-1	77272	FIXTURE,CHECKING USBL ON.... 66-19098 & SUBSEQUENT	BC	EA	V					1	A43	4
C	PB-DB-Z	4920-943-0742	114G1059-1	77272	FIXTURE TRAILING EDGE TEST...	A	EA	V					*	A43	4

	(1) SMR CODE	(2) FEDERAL STOCK NUMBER	(3) DESCRIPTION REFERENCE NUMBER & MFR CODE		USABLE ON CODE	(4) UNIT OF MEAS	(5) QTY INC IN UNIT	(6) 30-DAY DS/GS MAINT ALW (a) 1-20	(b) 21-50	(c) 51-100	(7) 1-YR ALWPER 100 EQUIP CNTGCY	(8) DEPOT MAINT ALWPER 1 EQUIP	(9) ILLUSTRATION (a) FIG NO	(b) ITEM NO
			FUNCTIONAL GROUP - 40	AIRFRAME TOOLS	CH-47									
	PB-DZ-Z	4920-420-5206	114G1227-1	77272 CONTROL ASSEMBLY,TETTER..... BALANCE	BC	EA	V					1	A43	5
C	PB-DZ-D	4920-229-6690	114G1228-1	77272 FIXTURE,TEETER BALANCE SYSTEM	BC	EA	V					1	A43	6
	PB-DZ-Z	4920-921-5581	114G1067-1	77272 FIXTURE,TEETER BALANCE.....	A	EA	V					*	A43	6
	XB-DZ-Z		114G1066-1	77272 FIXTURE,MASTER BLADE.....	A	EA	V						A43	6
	PB-HZ-Z	6635-246-8465	766	11710 TENSIOMETER.....	ABC	EA	V	*	*	*		*	A43	
C	PB-DB-Z	4920-613-7389	T210297	62983 SHIELD VALVE FACE.....	ABC	EA	V					*	A43	
	PB-DZ-Z	5120-869-3655	114GS211-1	77272 WRENCH,GUIDE FILTER.....	A	EA	V					1	A44	1
C	------H	1730-780-5286	114G1009-1	77272 RIGGING TOOL,BLADE REWKTO... 114G1009-63 USING KIT 114GK023-5	A	EA							A44	4
	PB-FZ-Z	4920-438-7730	114GK023-5	77272 MODIFICATION KIT.....	ABC	EA	V	*	*	*		*	A44	
C	PB-FH-H	4920-228-1847	114G1009-63	77272 ANGLE TOOL,ROTOR BLADE.....	ABC	EA	V	1	1	1		1	A44	4
	PB-FZ-Z	6650-133-7862	114GS200-5	77272 INSPECTION TOOL.....	A	EA	V	1	1	1		1	A44	5
	PB-DZ-Z	5120-248-1266	114G1305-1	77272 PUSHER,BEARING.....	C	EA	V					1	A44	6
	PB-HZ-Z	5120-239-6165	114G1391-1	77272 PULLER,MECHANICAL.....	C	EA	V	*	*	*		*	A44	7
	PB-HZ-Z	4920-836-8499	114G1174-1	77272 RING SIZING TOOL.....	ABC	EA	V	*	*	1		1	A44	8
	PB-DZ-Z	5120-944-2527	114G1124-1	77272 PULLER,MECHANICAL.....	ABC	EA	V					1	A45	2
	PB-DZ-Z	4920-111-2984	114G1230-1	77272 CHECKING FIXTURE.....	BC	EA	V					*	A45	3
	PB-FZ-Z	5120-247-0216	114G1263-1	77272 SWAGGING TOOL,PITCH.....	ABC	EA	V	1	1	1		1	A45	4
	PB-HZ-Z	5120-135-6724	114G1271-1	77272 PULLER,CYLINDER SLEEVE.....	C	EA	V	1	1	1		1	A45	5
	PB-HZ-Z	5120-135-6726	114G1273-1	77272 PULLER ASSEMBLY,CHECK.....	C	EA	V	*	*	*		*	A45	6
	PB-HZ-Z	4920-037-8100	T162359	62983 FIXTURE,HOLDING.....	ABC	EA	V	*	*	*		*	A45	7
	PB-DZ-Z	4920-510-3093	T123173	62983 FIXTURE,HOLDING.....	ABC	EA	V					*	A45	
	PB-DZ-Z	4920-962-8818	56632T2	75250 FIXTURE,HOLDING.....	ABC	EA	V					1	A46	1
C	XD-DZ-Z		56691T1	75250 REMOVING TOOL,SLEEVE.....	ABC	EA	V						A46	2
	PB-DZ-Z	5120-940-0995	T238705	62983 BEARING GUIDE.....	ABC	EA	V					1	A46	3
	PB-HZ-Z	4920-176-4260	114G1410-1	77272 FIXTURE,SUPPORT.....	ABC	EA	V	*	*	*		*	A46	4
C	PB-DB-D	4920-964-1301	114G1155-1	77272 FIXTURE,CYLINDER.....	ABC	EA	V					*	A46	5
C	PB-HB-Z	4920-157-1427	114G1411-1	77272 FIXTURE,LOCATING.....	ABC	EA	V	*	*	*		*	A46	6
	PB-DZ-Z	4920-865-8115	114GS212-1	77272 INSERT,POPPET VALVE.....	A	EA	V					1	A46	7
	PB-DZ-Z	4920-865-8121	114GS213-1	77272 EXTRACTOR,POPPET.....	A	EA	V					1	A46	8
	PB-DZ-Z	4920-866-6954	114GS210-1	77272 FIXTURE PLATE.....	A	EA	1					1	A46	9

	(1) SMR CODE	(2) FEDERAL STOCK NUMBER	(3) DESCRIPTION REFERENCE NUMBER & MFR CODE			USABLE ON CODE CH-47	(4) UNIT OF MEAS	(5) QTY INC IN UNIT	(6) 30-DAY DS/GS MAINT ALW (a) 1-20	(b) 21-50	(c) 51-100	(7) 1-YR ALWPER 100 EQUIP CNTGCY	(8) DEPOT MAINT ALWPER 100 EQUIP	(9) ILLUSTRATION (a) FIG NO	(b) ITEM NO
			FUNCTIONAL GROUP - 40 AIRFRAME TOOLS												
	PB-DZ-Z	4920-963-1997	56758T1	75250	SWAGING TOOL.....	ABC	EA	V					1	A47	1
	PB-DZ-Z	5120-758-6670	T238708	62983	DRIVER,BEARING.....	ABC	EA	V					*	A47	2
	PB-DZ-Z	5120-126-4075	114E5851-1	77272	PUSHER,ROLLER BEARING.....	AB	EA	V					1	A47	3
	PB-DZ-Z	4920-917-7094	TES7736	62983	FIXTURE ASSEMBLY,MOTOR.....	ABC	EA	V					1	A47	4
C	PB-DZ-Z	5120-916-5612	T300332	62983	MANDREL,LOADING.....	ABC	EA	V					1	A47	5
C	PB-DZ-Z	4920-917-7105	T300331	62983	DRIVER,SHAFT MOTOR.....	ABC	EA	V					*	A47	6
	PB-FZ-Z	1730-760-3369	114E5889-68	77272	RIGGING SET,CONTROL SYSTEM... USBL EFF 59-4982 THRU 62-2124	A	EA	V	1	1	1		1	A47	7
	XB-FZ-Z		114E5889-37	77272	.RIGGING SET,FIRST.....	A	EA	V						A47	
	XB-FZ-Z		114E5889-2	77272	.BAR,RIGGING.....	A	EA	V						A47	
	PB-FZ-Z	1730-022-7068	114E5889-3	77272	.BAR ASSEMBLY,RIGGING SET....	A	EA	V	*	*	*		*	A47	
	XB-FZ-Z		114E5889-6	81205	.PIN,RIGGING.....	A	EA	V						A47	
	XB-FZ-Z		114E5889-7	81205	.PIN,RIGGING.....	A	EA	V						A47	
	XB-FZ-Z		114E5889-8	81205	.YOKE ASSEMBLY.....	A	EA	V						A47	
	XB-FZ-Z		114E5889-4	77272	.BAR ASSEMBLY,RIGGING SET....	A	EA	V						A47	
	XB-FZ-Z		114E5889-5	77272	.BAR ASSEMBLY,RIGGING SET....	A	EA	V						A47	
	XB-FZ-Z		114E5889-10	77272	.BAR,NEUTRAL.....	A	EA	1						A47	
	PB-FZ-Z	1730-299-0991	114E5889-65	77272	.LOCATING PIN.....	A	EA	V	1	1	1		1	A47	
	PB-FZ-Z	1730-943-0781	114E5889-38	77272	.CASE,RIGGING SET.....	A	EA	V	1	1	1		1	A47	
	XB-DZ-Z		114GS048-1	77272	BOWL,DUMMY,FILTER.....	ABC	EA	1						A47	8
	PB-DZ-Z	5365-914-6488	T300325	62983	RING,RETAINING.....	ABC	EA	V					*	A48	2
	XB-DZ-Z		114GS049-1	77272	FILTER ELEMENT,DUMMY.....	ABC	EA	V						A48	3
	PB-DZ-Z	4920-923-1975	114G1071-1	77272	FIXTURE,DRIVE SHAFT.....	ABC	EA	V					*	A48	4
	XA----Z		3118109G029	00624	.RATCHET ASSEMBLY.....	ABC		V						A48	
	PB-DZ-Z	4920-910-2682	114GS050-1	77272	FILTER ELEMENT,DUMMY.....	ABC	EA	V					*	A48	5
	PB-DZ-Z	4920-917-7095	TES7830	62983	FIXTURE,HOLDING,HYDRAULIC.... MOTOR	ABC	EA	V					*	A48	6
	PA-DZ-Z	5120-959-8238	AA4825-1211SE4	06816	POPPET ADAPTER TOOL.....	ABC	EA	1					1	A48	7
	PB-FZ-Z	4920-924-7727	114G1093-1	77272	FIXTURE,HOLDING.....	A	EA	V	1	1	1		1	A48	8
N	PB-FZ-Z	4920-879-3050	114G1093-12	77272	FIXTURE,HOLDING.....	BC	EA	V	*	*	*		*	A48	8
	PB-DZ-Z	4920-923-1996	114G1074-1	77272	FIXTURE,HOLDING.....	ABC	EA	V					*	A49	1
	PB-DZ-Z	4920-924-7723	114G1125-1	77272	ADAPTER,PLATE BEARING.....	AB	EA	V					*	A49	2
	PB-DZ-Z	4920-923-2149	114G1126-1	77272	FIXTURE,TEST PRESSURE.....	ABC	EA	V					1	A49	3
C	PB-HB-Z	4920-929-3676	114G1144-1	77272	FIXTURE,SHOCK ABSORBER.....	AB	EA	V	1	1	1		1	A49	4
	PB-HZ-Z	4920-929-3674	114G1146-1	77272	TEST BLOCK ASSEMBLY.....	AB	EA	V	*	*	*		*	A49	5
	PB-DZ-Z	5120-135-6727	114G1302-1	77272	WRENCH ASSEMBLY,LOCKNUT.....	C	EA	V					1	A49	6
	PB-DZ-Z	4920-917-1890	114G1165-1	77272	SLEEVE,PROJECTIVE.....	A	EA	V					1	A49	7

	(1) SMR CODE	(2) FEDERAL STOCK NUMBER	(3) DESCRIPTION REFERENCE NUMBER & MFR CODE			USABLE ON CODE	(4) UNIT OF MEAS	(5) QTY INC IN UNIT	(6) 30-DAY DS/GS MAINT ALW (a) 1-20	(b) 21-50	(c) 51-100	(7) 1 YR ALWPER 100 EQUIP ONTGCY	(8) DEPOT MAINT ALWPER 100 EQUIP	(9) ILLUSTRATION (a) FIG NO	(b) ITEM NO
			FUNCTIONAL GROUP - 40 AIRFRAME TOOLS			CH-47									
C	PB-HB-Z	4920-229-6688	114G1274-1	77272	FIXTURE,ASSEMBLY.....	C	EA	V	1	1	1		1	A50	1
	PB-DZ-Z	5120-959-5512	T246942	62983	GUIDE,RETAINER.....	ABC	EA	V					1	A50	2
	PB-HZ-Z	5120-135-6725	114G1275-1	77272	WRENCH ASSEMBLY,VALVE.....	C	EA	V	*	*	*		*	A50	3
	PB-HZ-Z	5120-136-2336	114G1288-1	77272	WRENCH,SPANNER.....	C	EA	V	*	*	*		*	A50	4
C	PB-FB-Z	5120-977-1723	114G1145-1	77272	WRENCH,SPANNER.....	AB	EA	V	1	1	1		1	A50	5
	PB-FZ-Z	4920-369-9545	114G1306-1	77272	FIXTURE,BLADE LAG SETTING....	ABC	EA	V	1	1	1		1	A50	6
		5120-097-8425	114GS225-1	77272	WRENCH,SPANNER.....	ABC	EA	V	1	1	1		1	A50	10
	PB-DZ-Z	4920-420-5205	114G1308-1	77272	DRIFT ASSEMBLY TRANSMISSION.. GEAR	C	EA	V					1	A51	1
	PB-DZ-Z	4920-127-3154	114G1311-1	77272	FIXTURE,GRINDING.....	C	EA	V					*	A51	2
	PB-DZ-Z	4920-136-2348	114G1317-1	77272	DRIFT ASSEMBLY,GEAR.....	C	EA	V					1	A51	3
	PB-DZ-Z	4920-904-2453	30005	35609	PLUG,SHUT OFF VALVE.....	A	EA	V					*	A51	4
	PB-FZ-Z	5180-103-0001	114G1137-10	77272	PULLER KIT,UNIVERSAL.....	ABC	EA	V	1	1	1		1	A51	5
	PB-FZ-Z	5310-134-4174	70362-1216	56878	.NUT,SELF LOCKING.....	ABC	EA	1	*	*	*		*	A51	
	PB-FZ-Z	5306-795-9398	70361-12-124	56878	.BOLT,SPECIAL.....	ABC	EA	1	*	*	*		*	A51	
	AF-FZ-Z		114GS195-1	77272	BORESCOPE SET,ROTOR.....	ABC		V						A52	1
	PB-FZ-Z	6650-999-2656	114GS195-2	77272	.BORESCOPE ASSEMBLY.....	ABC	EA	V	1	1	1		1	A52	2
	XB-HZ-Z		114GS195-4	77272	..EYEPIECE SECTION.....	ABC	EA	V						A52	3
	XB-HZ-Z		114GS195-8	77272	...ADJUSTABLE EYEPIECE.....	ABC	EA	V						A52	4
	XB-HZ-Z		114GS195-9	77272	...CONNECTION ELECTRICAL.....	ABC	EA	V						A52	5
	XB-HZ-Z		114GS195-10	77272	...HANDWHEEL.....	ABC	EA	V						A52	6
	XB-HZ-Z		114GS195-11	77272	..OBJECTIVE SECTION.....	ABC	EA	V						A52	7
	PB-FZ-Z	6650-059-6268	114GS195-6	77272	..PRISM HEAD.....	ABC	EA	V	1	1	1		1	A52	8
	XB-HZ-Z		114GS195-7	77272	..TRANSFORMER.....	ABC	EA	V						A52	9
	PB-FZ-Z	6650-835-4854	114GS195-12	77272	.STAND,BORESCOPE.....	ABC	EA	3	*	*	*		*	A52	10
	PB-DZ-Z	5120-053-3344	T232052	62983	WRENCH,SPECIAL.....	ABC	EA	V					*	A53	1
C	PB-DZ-Z	4920-903-4606	T300317	62983	VANE,CLEANER.....	A	EA	V					*	A53	2
	PB-DZ-Z	5120-874-2587	T240221	62983	SLEEVE,BEARING.....	ABC	EA	V					*	A53	3
	PB-DZ-Z	5120-772-7140	T216079	62983	MANDREL,BEARING.....	ABC	EA	V					*	A53	4
	XB-DZ-Z		T104760	62983	TOOL,AIR GAGE,RING.....	ABC	EA	V						A53	5
	PB-HZ-Z	5120-075-0375	CI103A	55719	PULLER,BEARING.....	ABC	EA	V	*	*	*		*	A53	
	PB-HZ-Z	4920-946-6939	114GS170-1	77272	FIXTURE,HOLDING.....	ABC	EA	V	*	*	*		*	A53	6
	PB-DZ-Z	5120-960-0166	70001T18	75250	ADAPTER,TORQUE.....	ABC	EA						*	A53	7

(1) SMR CODE	(2) FEDERAL STOCK NUMBER	(3) DESCRIPTION REFERENCE NUMBER & MFR CODE			USABLE ON CODE CH-47	(4) UNIT OF MEAS	(5) QTY INC IN UNIT	(6) 30-DAY DS/GS MAINT ALW (a) 1-20	(b) 21-50	(c) 51-100	(7) 1-YR ALWPER 100 EQUIP CNTGCY	(8) DEPOT MAINT ALWPER 100 EQUIP	(9) ILLUSTRATION (a) FIG NO	(b) ITEM NO
		FUNCTIONAL GROUP - 40 AIRFRAME TOOLS												
PB-DZ-Z	4920-876-5594	T246990	62983	CENTER	ABC	EA	V					*	A54	1
PB-DZ-Z	4920-832-2669	T233046	62983	FIXTURE,SHAFT HOLDING	ABC	EA	V					*	A54	2
PB-HZ-Z	5120-842-6348	114G1202-1	77272	PULLER,BEARING	A	EA	V	*	*	*		*	A54	3
PB-HZ-Z	5120-993-5117	114G1203-1	77272	ADAPTER,BEARING	ABC	EA	V	2	2	2		1	A54	3
PB-FZ-Z	5120-781-8422	1632K2	82831	INSTALLING TOOL,FASTENERS	ABC	EA	V	1	1	1		1	A54	
PB-HZ-Z	4920-944-2606	T1233-2	93713	HOLDER,CLUTCH GEAR	ABC	EA	V	*	*	*		*	A54	4
C XB-HZ-H		T1900	93712	MOTOR,SLAVE	ABC	EA	V						A54	5
PB-DZ-Z	4920-832-2663	T232050	62983	PROTECTOR,CYLINDER	ABC	EA	V					*	A54	
XB-DZ-Z		T233047	62983	DRIVER,FLANGE BEARING	ABC	EA	V						A54	6
C XB-DB-Z		55671T1	75250	FIXTURE,HOLDING	A	EA	V						A54	
C PB-HB-Z	4920-547-8998	LT3178	35351	FIXTURE,HOLDING	ABC	EA	V	1	1	1		1	A54	
C XD-DZ-Z		50000T55	75250	FIXTURE,RATCHET	A	EA	V						A54	
PB-DZ-Z	4920-832-2564	T243172	62983	ADAPTER,HOLDING	ABC	EA						*	A54	7
C PB-HZ-Z	4920-971-8360	T7828	93712	FIXTURE,TEST	ABC	EA	V	*	*	*		1	A55	
PB-DZ-Z	5120-957-7550	114G1163-1	77272	WRENCH ASSEMBLY	ABC	EA	V					*	A55	1
XB-DZ-Z		50000T43	75250	FIXTURE,HOLDING	A	EA	V						A55	
XB-DZ-Z		50000T5	75250	ADAPTER	A	EA	V						A55	
PB-HZ-Z	5120-072-4451	114GS162-1	77272	PULLER,BEARING	A	EA	V	*	*	*		*	A55	2
PB-FZ-Z	5133-293-1903	FEDGGGC613TY4CLA	81348	COUNTERSINK	A	EA	1	*	*	*		*	A55	
PB-DZ-Z	4920-995-2537	TES6429	62983	FIXTURE,HOLDING	AB	EA	V					1	A55	
PB-DZ-Z	4920-995-2540	TES6479	62983	FIXTURE,HOLDING	AB	EA	V					*	A55	
PB-DZ-Z	4920-995-2516	T300564	62983	FIXTURE,HOLDING	AB	EA	V					1	A55	
PB-DZ-Z	4920-995-2515	T243015	62983	SPLIT RING,BEARING	A	EA	1					*	A55	
PB-DZ-Z	4920-995-2519	T402361	62983	FIXTURE,PIN DRIVING	AB	EA	V					*	A55	
PB-DZ-Z	4920-995-2520	T413373	62983	FIXTURE,FLOW CONTROL	AB	EA	V					*	A55	
PA-DZ-Z	5120-898-7967	1489048-1	02987	FIXTURE,LOCATING	AB	EA	1					*	A55	
PB-DZ-Z	4920-916-6165	114GS026-1	77272	FIXTURE,TEST	ABC	EA	V					*	A55	3
PB-DZ-Z	5120-052-4789	TDS04-9-8	81982	PULLER,BEARING	ABC	EA	V					*	A55	
PB-HZ-Z	5110-869-3701	WS30	07015	THERMAL STRIPPER	ABC	EA	V	*	*	*		*	A55	
PA-FZ-Z	4730-918-0418	711	40770	DISCONNECT COUPLING	A	EA	1	*	*	*		*	A55	

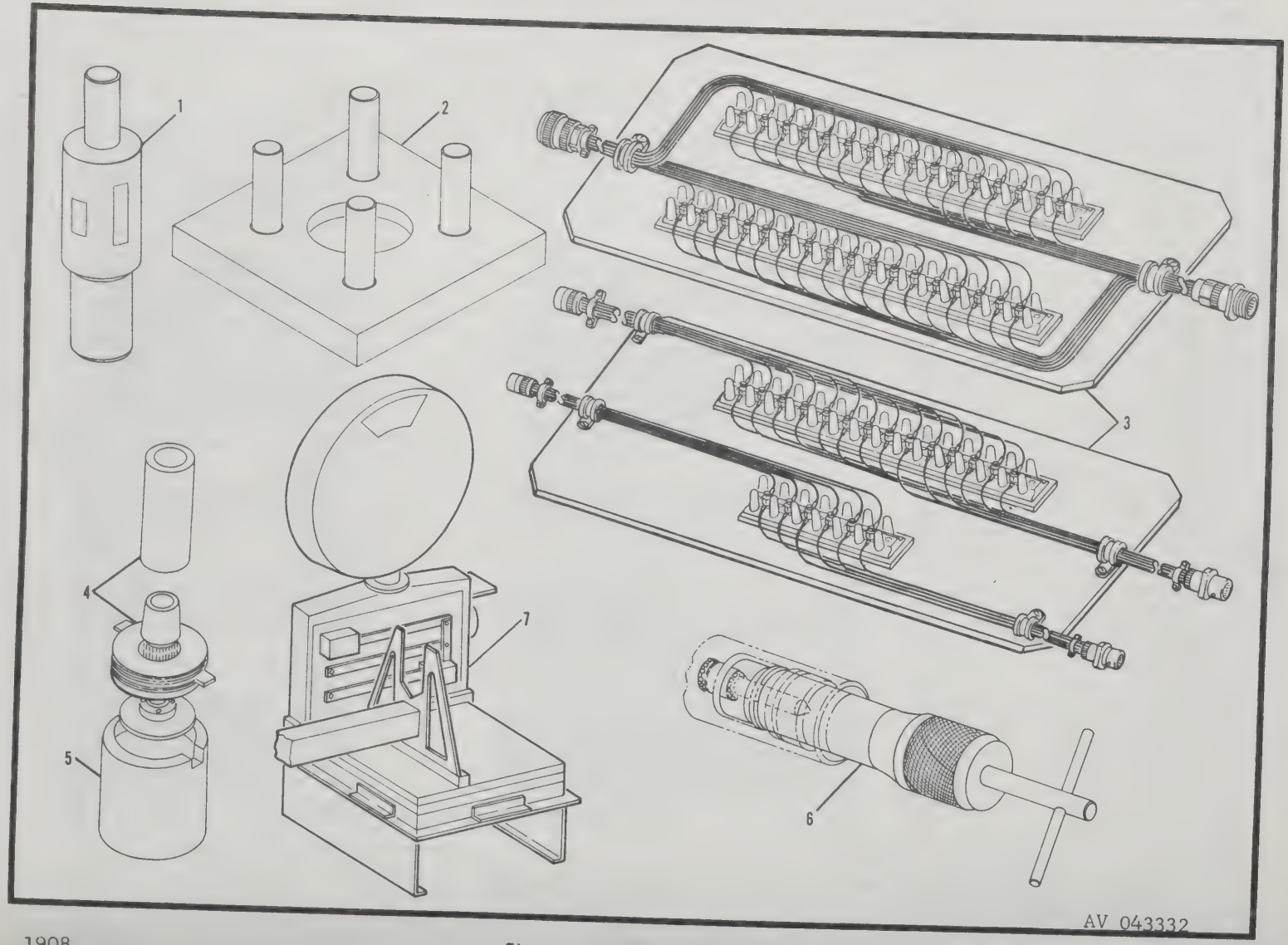

Figure A1. Airframe Tools

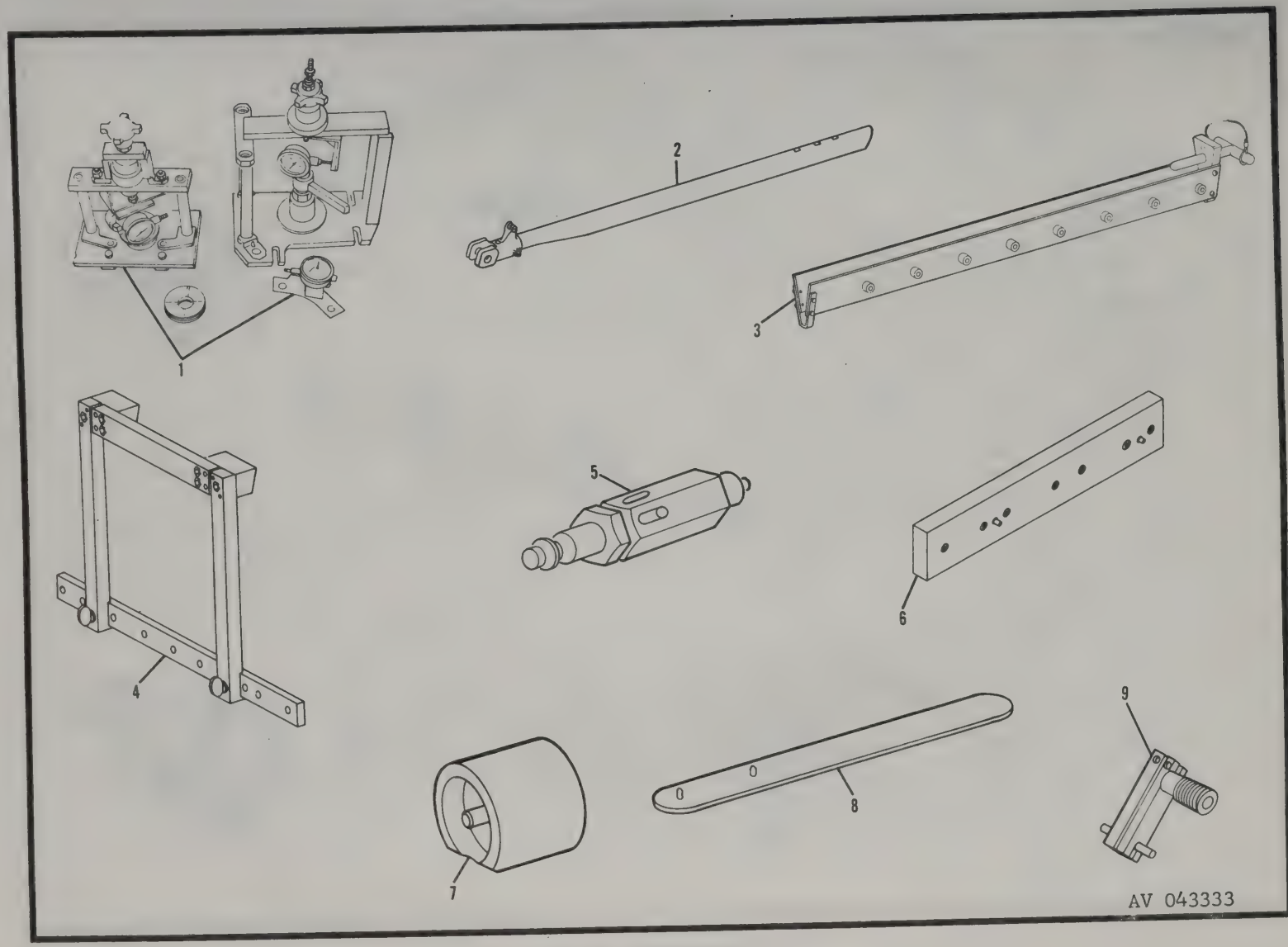

Figure A2. Airframe Tools

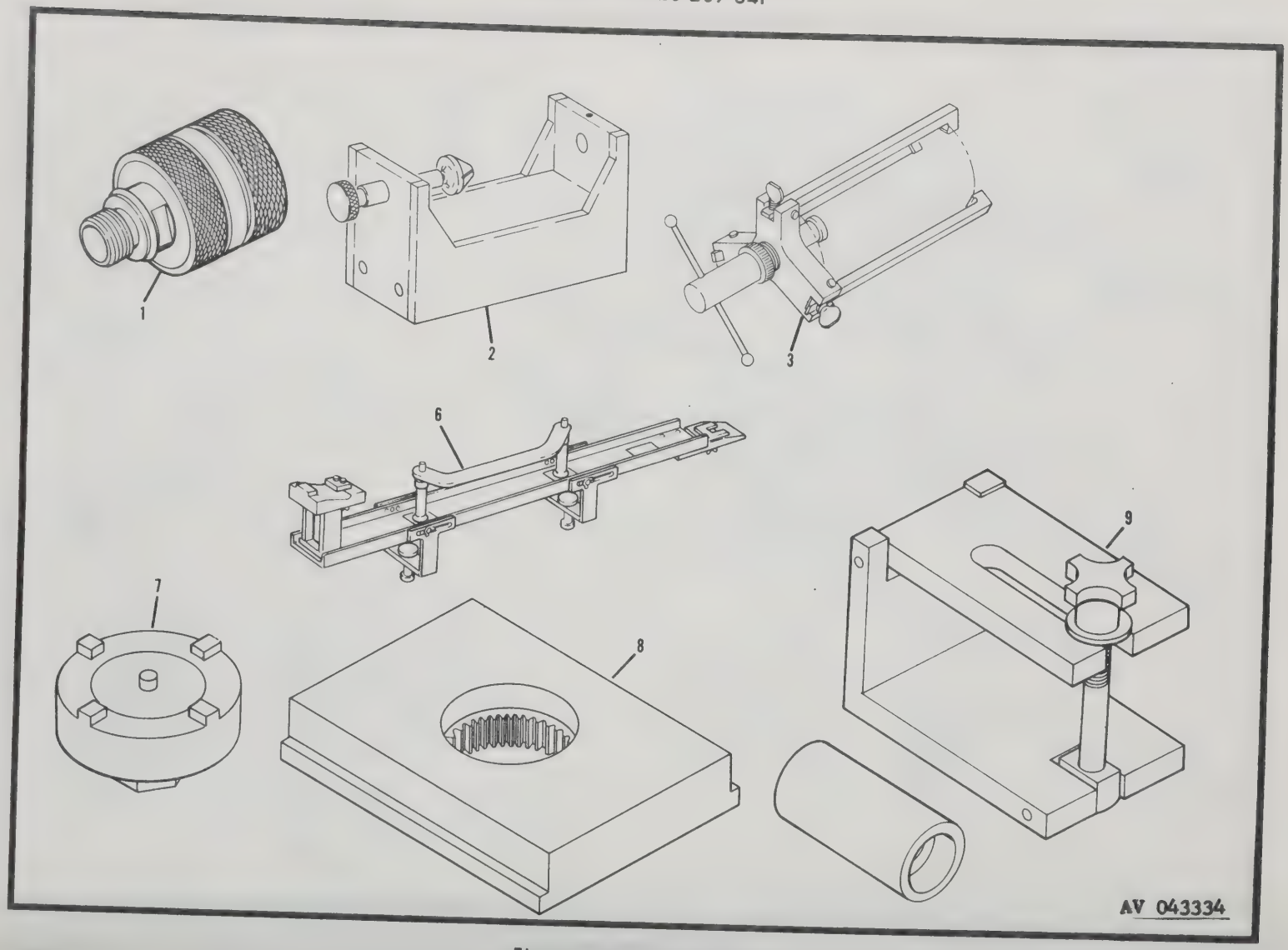

1910

Figure A3. Airframe Tools

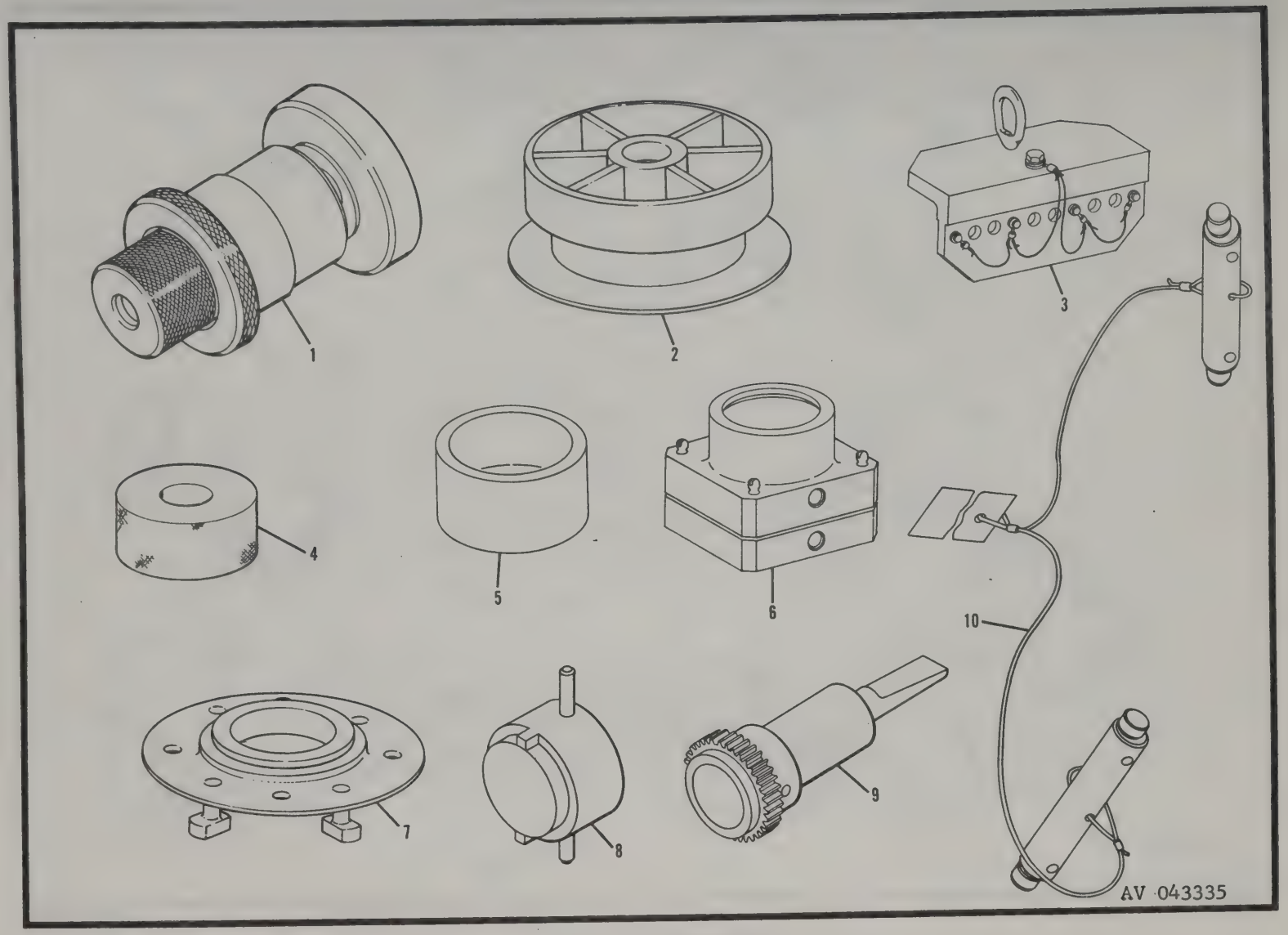

Figure A4. Airframe Tools

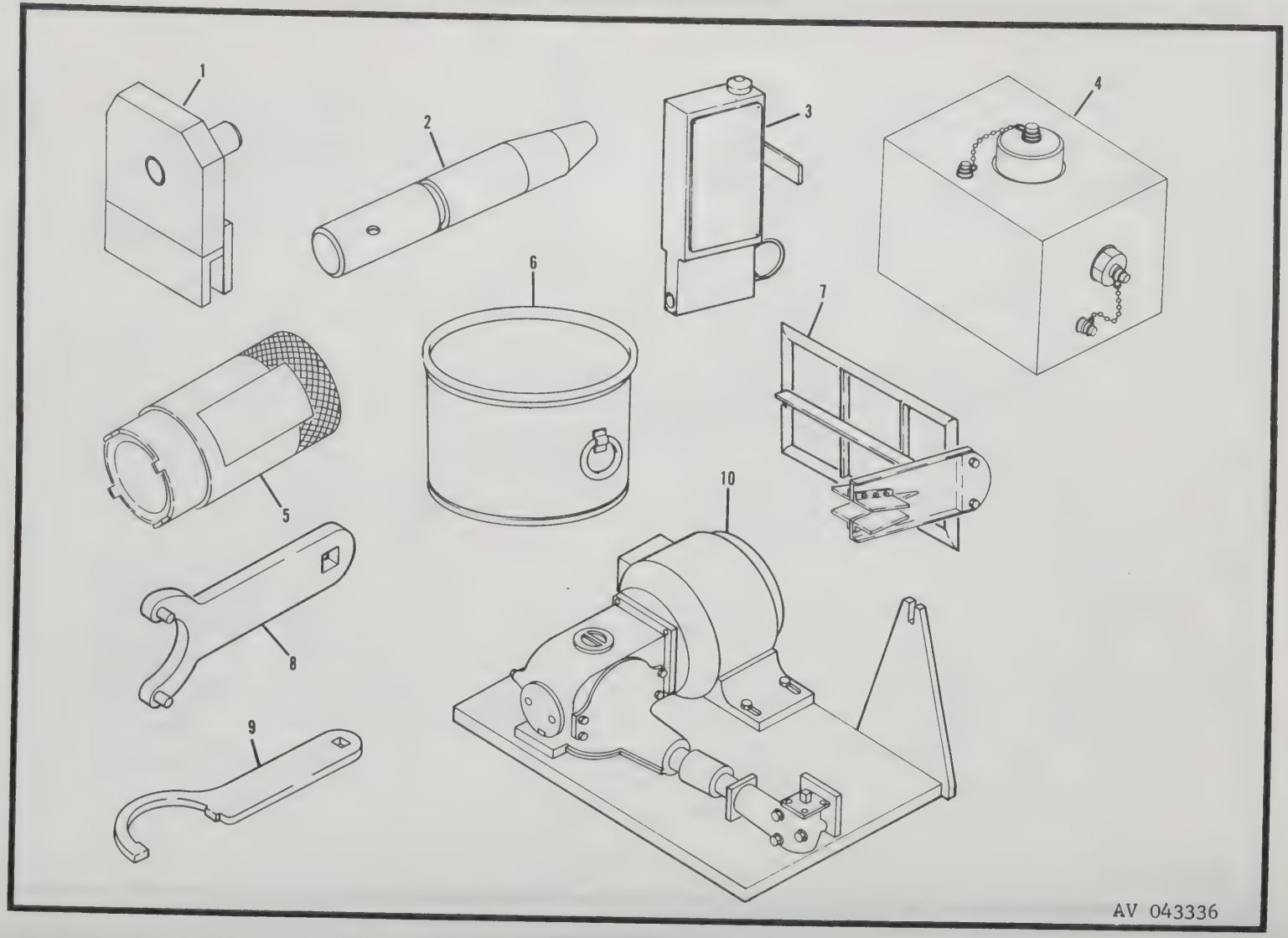

1912

Figure A5. Airframe Tools

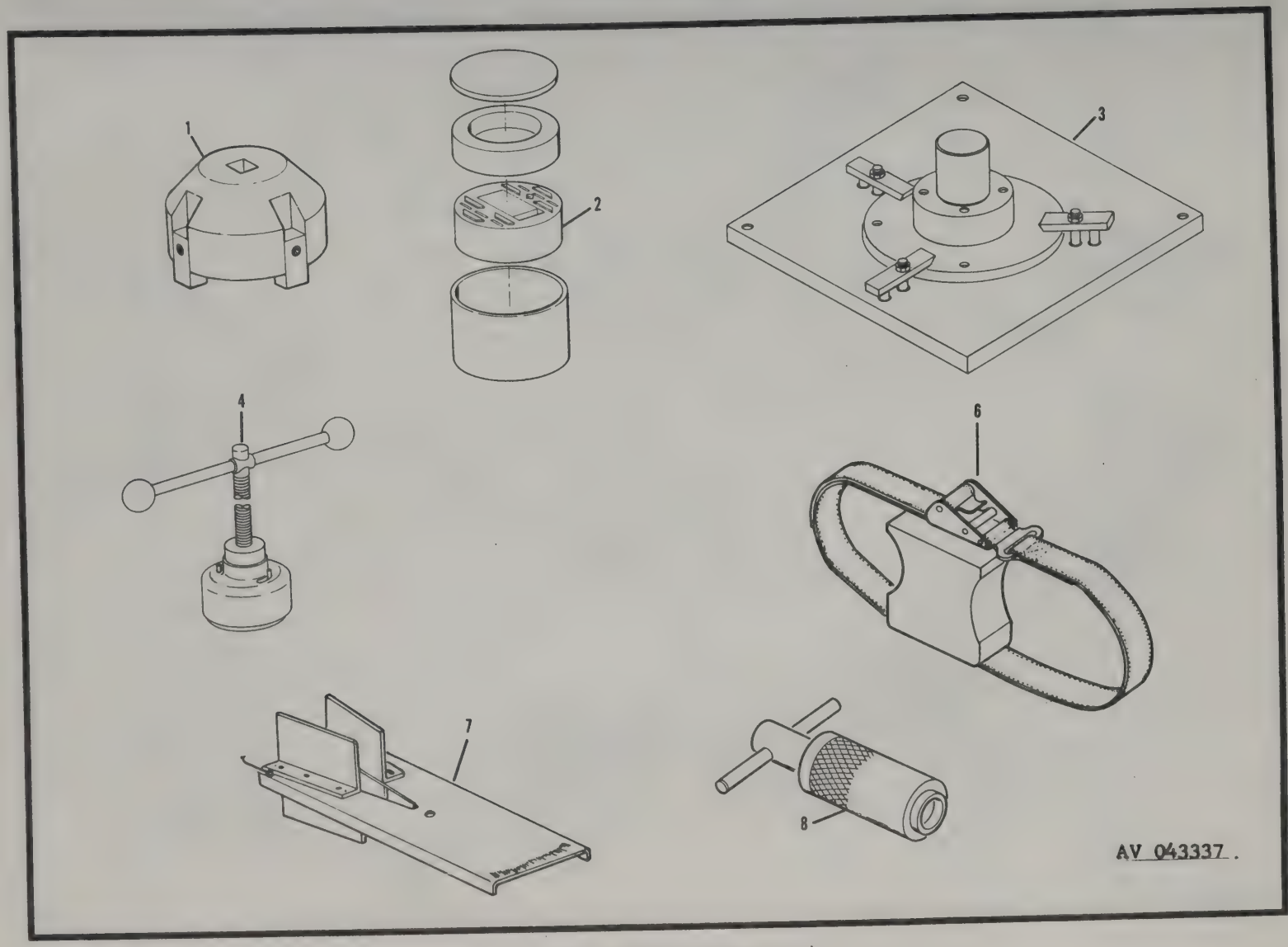

Figure A6. Airframe Tools

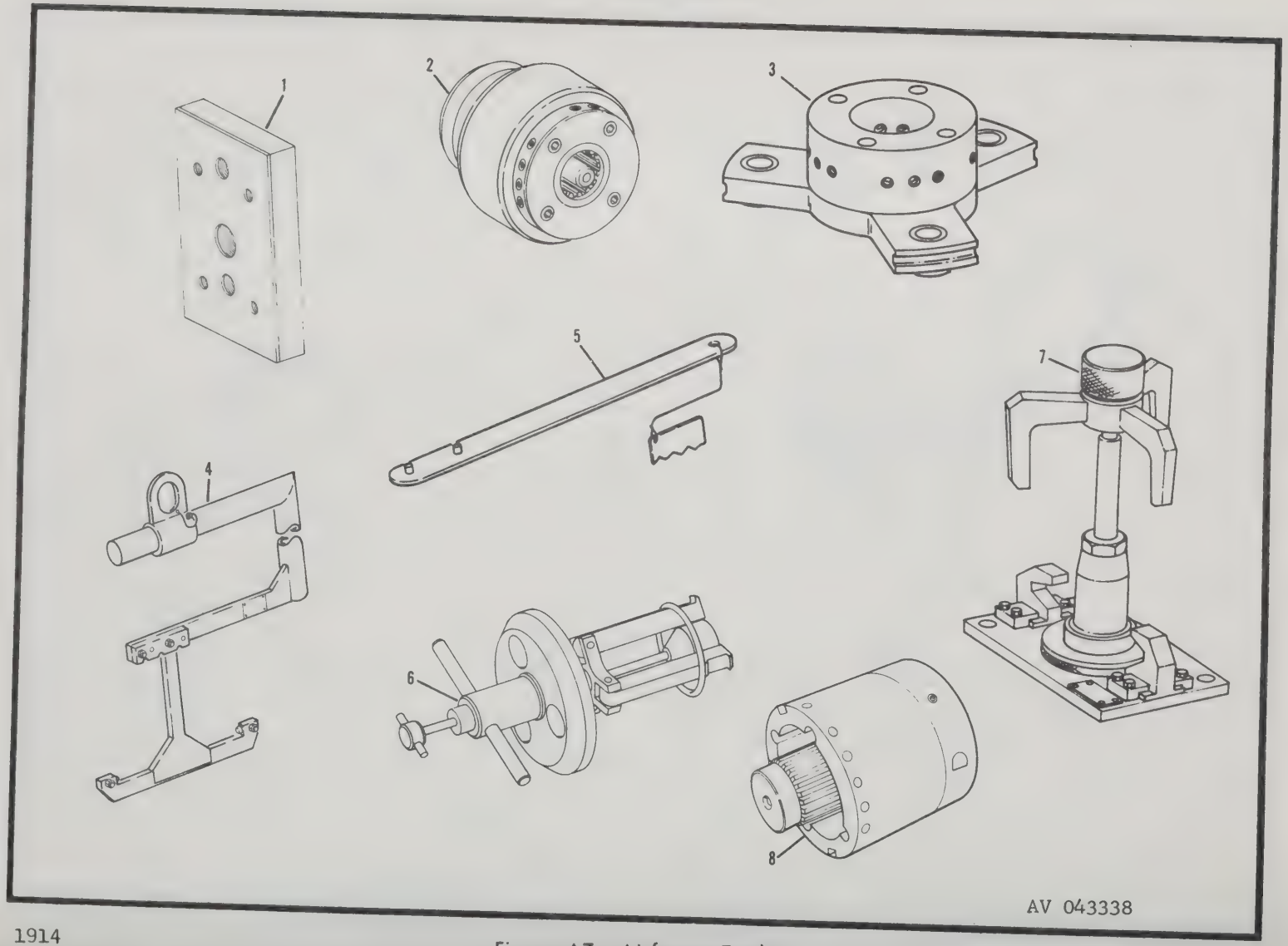

1914

Figure A7. Airframe Tools

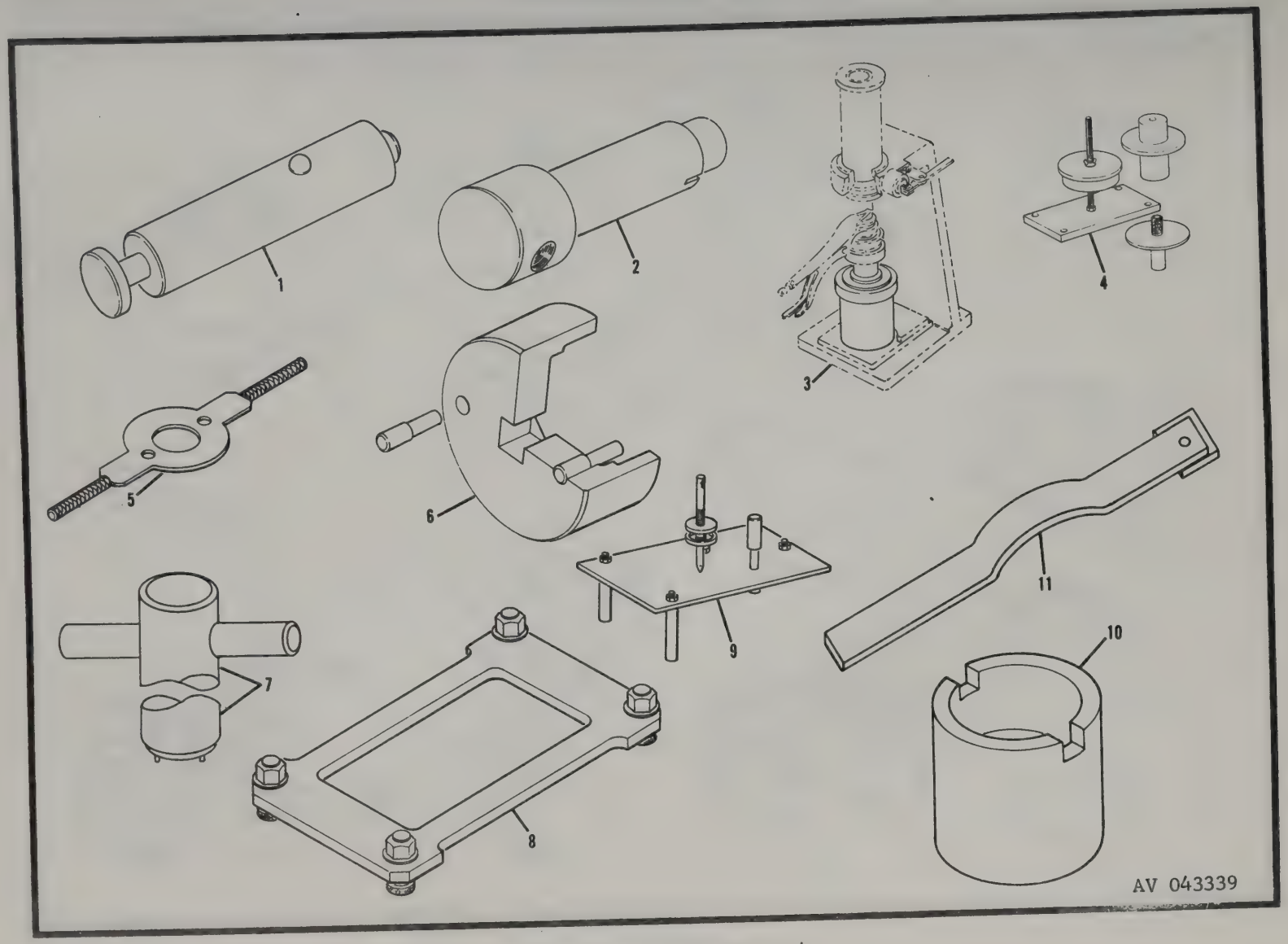

Figure A8. Airframe Tools

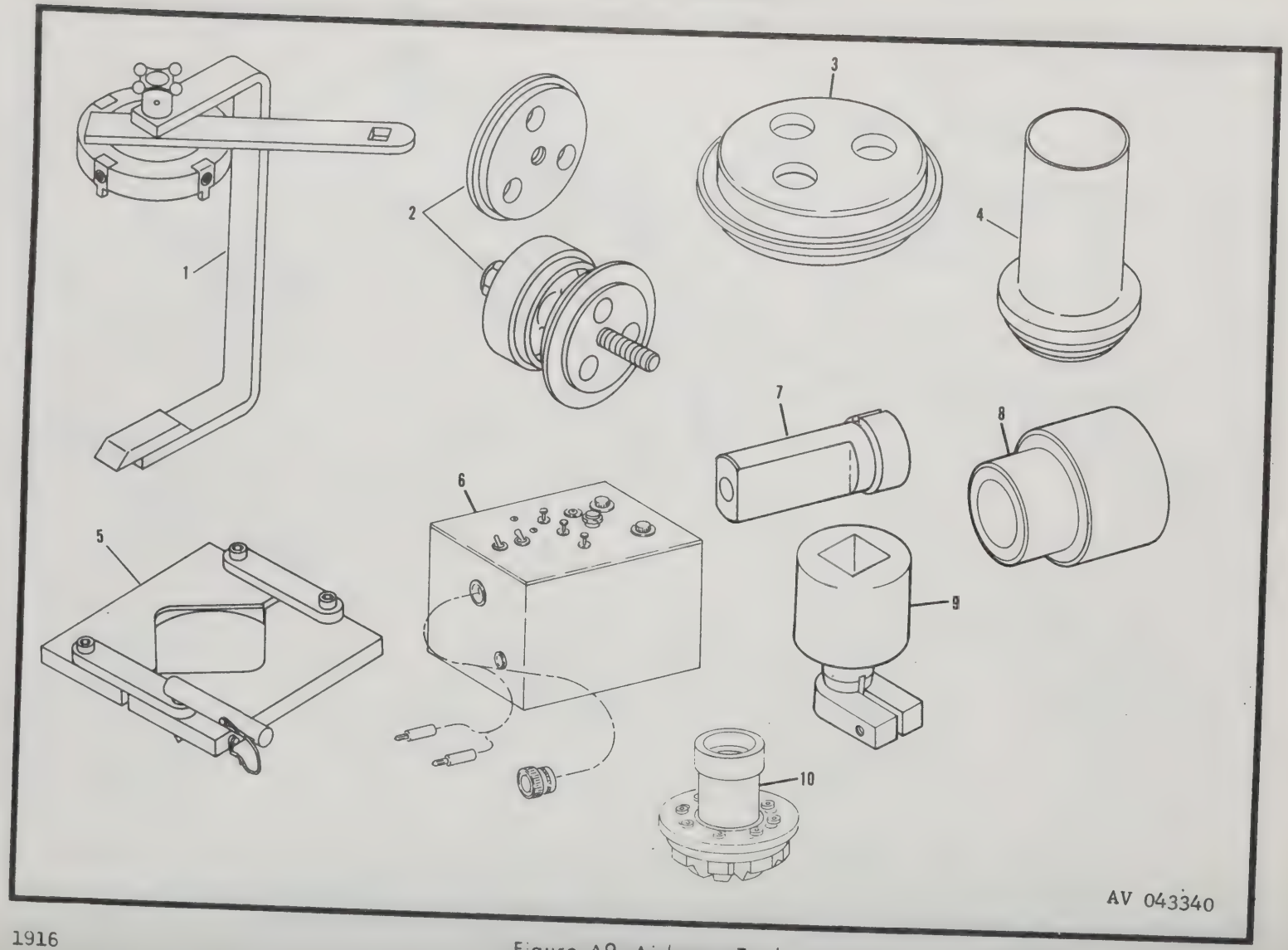

1916

Figure A9. Airframe Tools

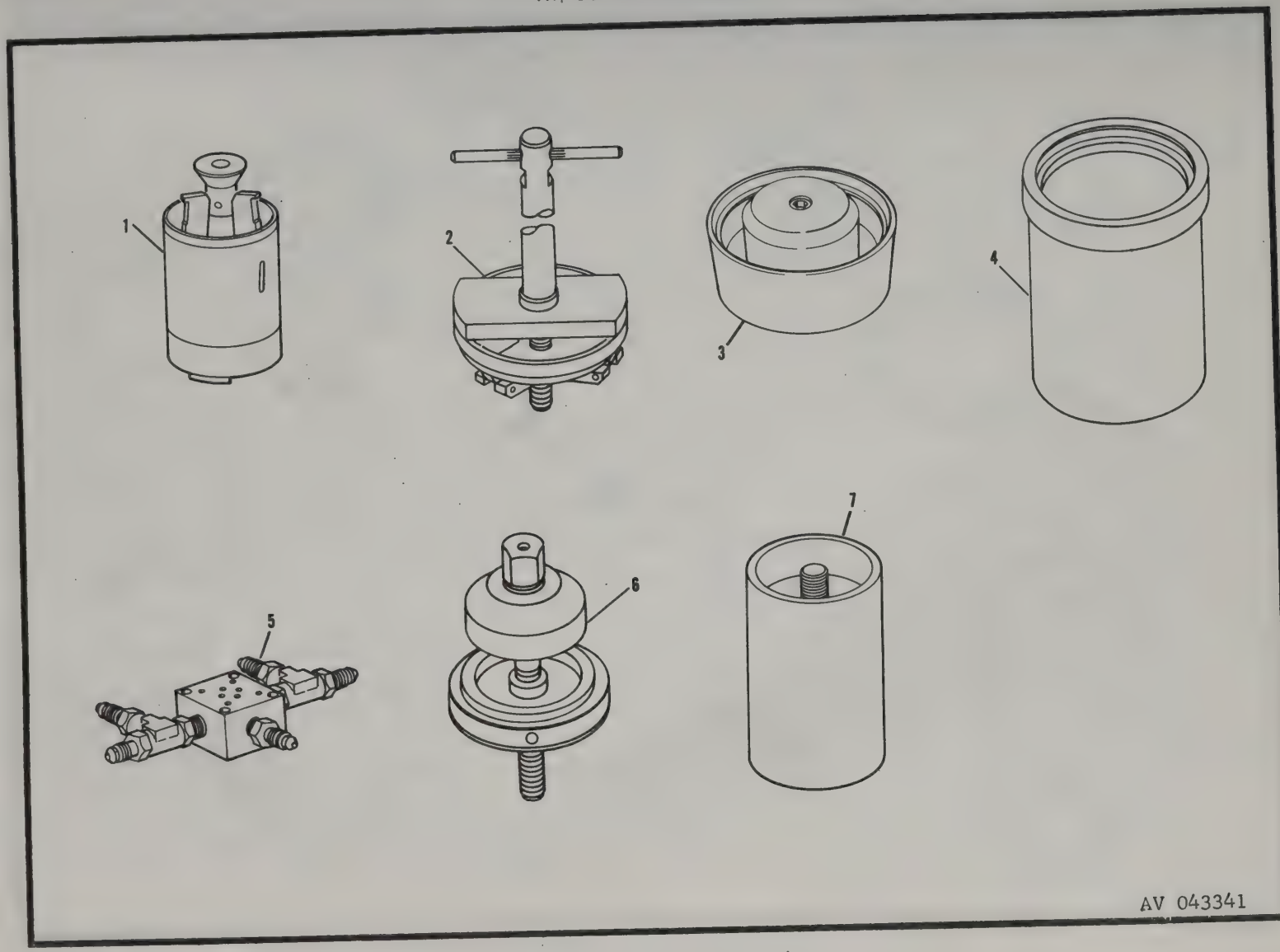

Figure A10. Airframe Tools

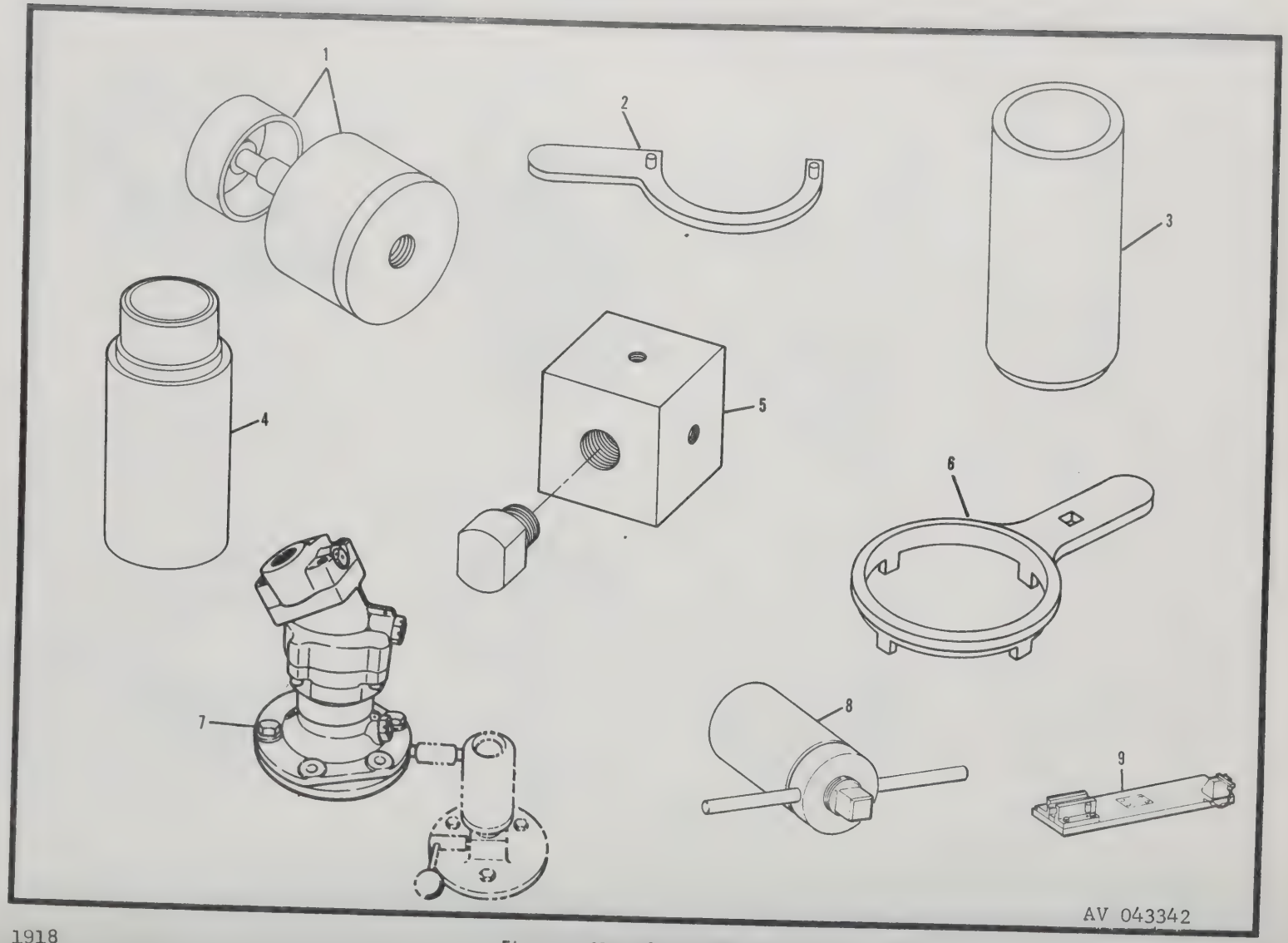

1918

Figure A11. Airframe Tools

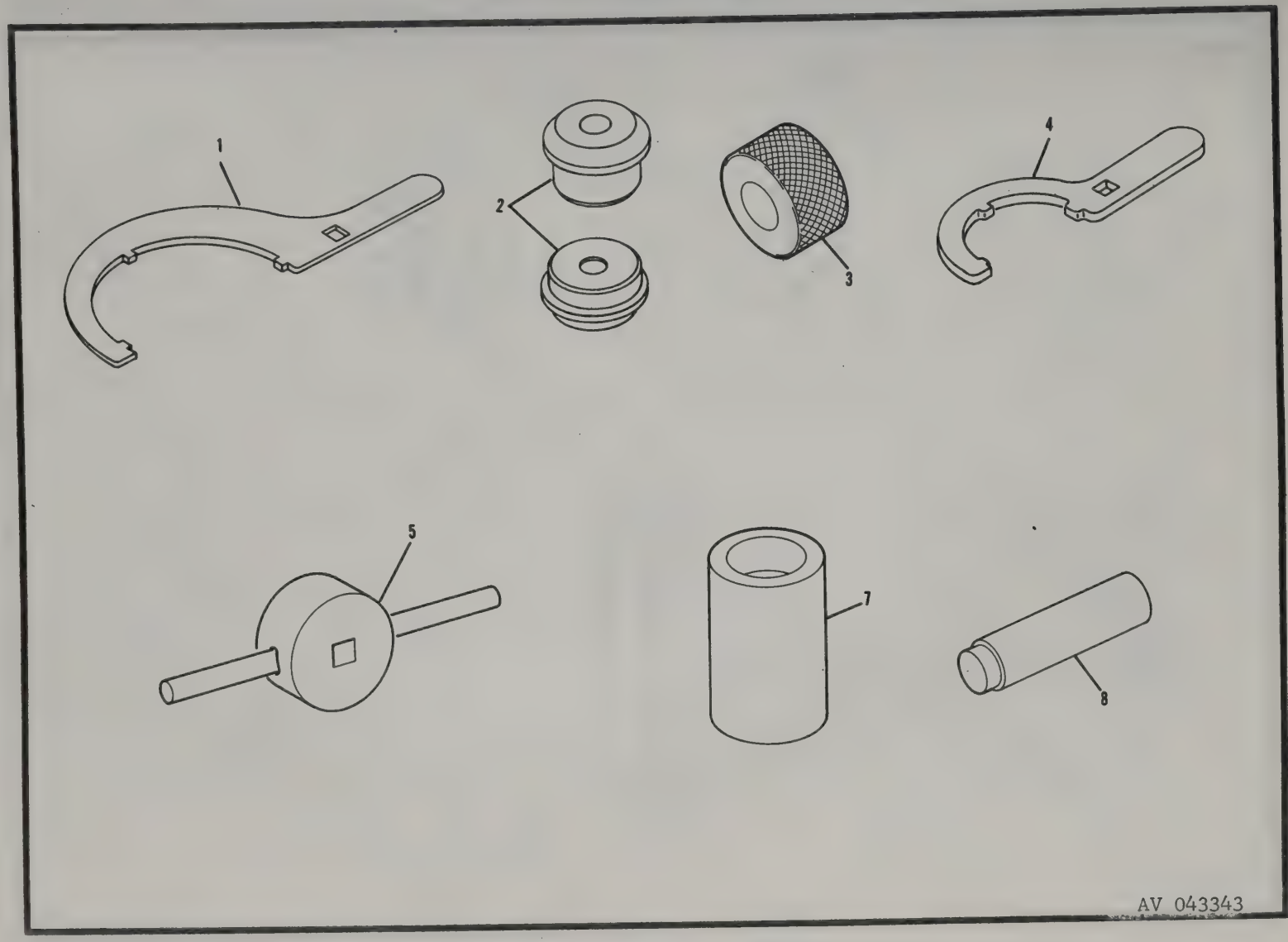

Figure A12. Airframe Tools

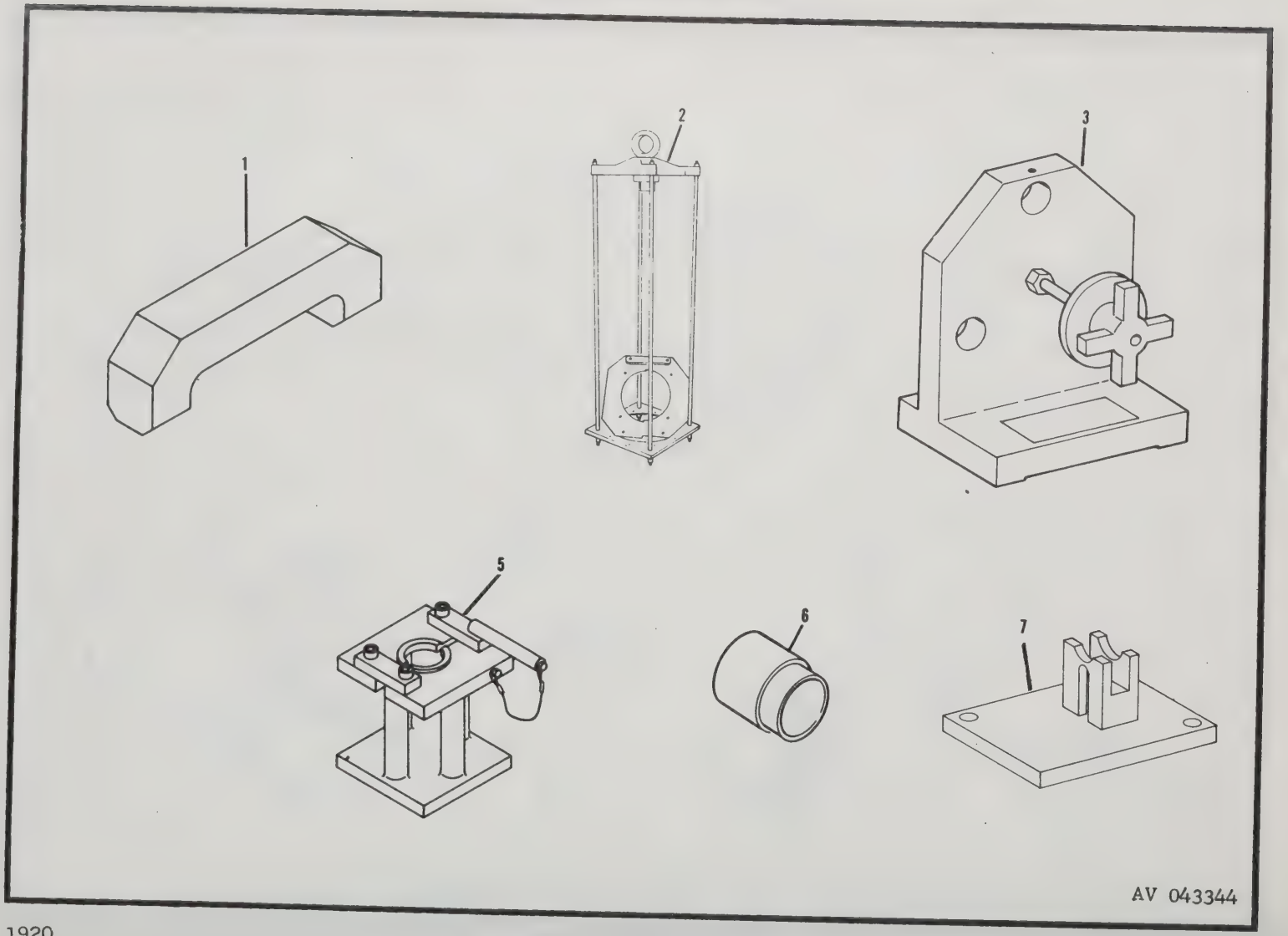

1920

Figure A13. Airframe Tools

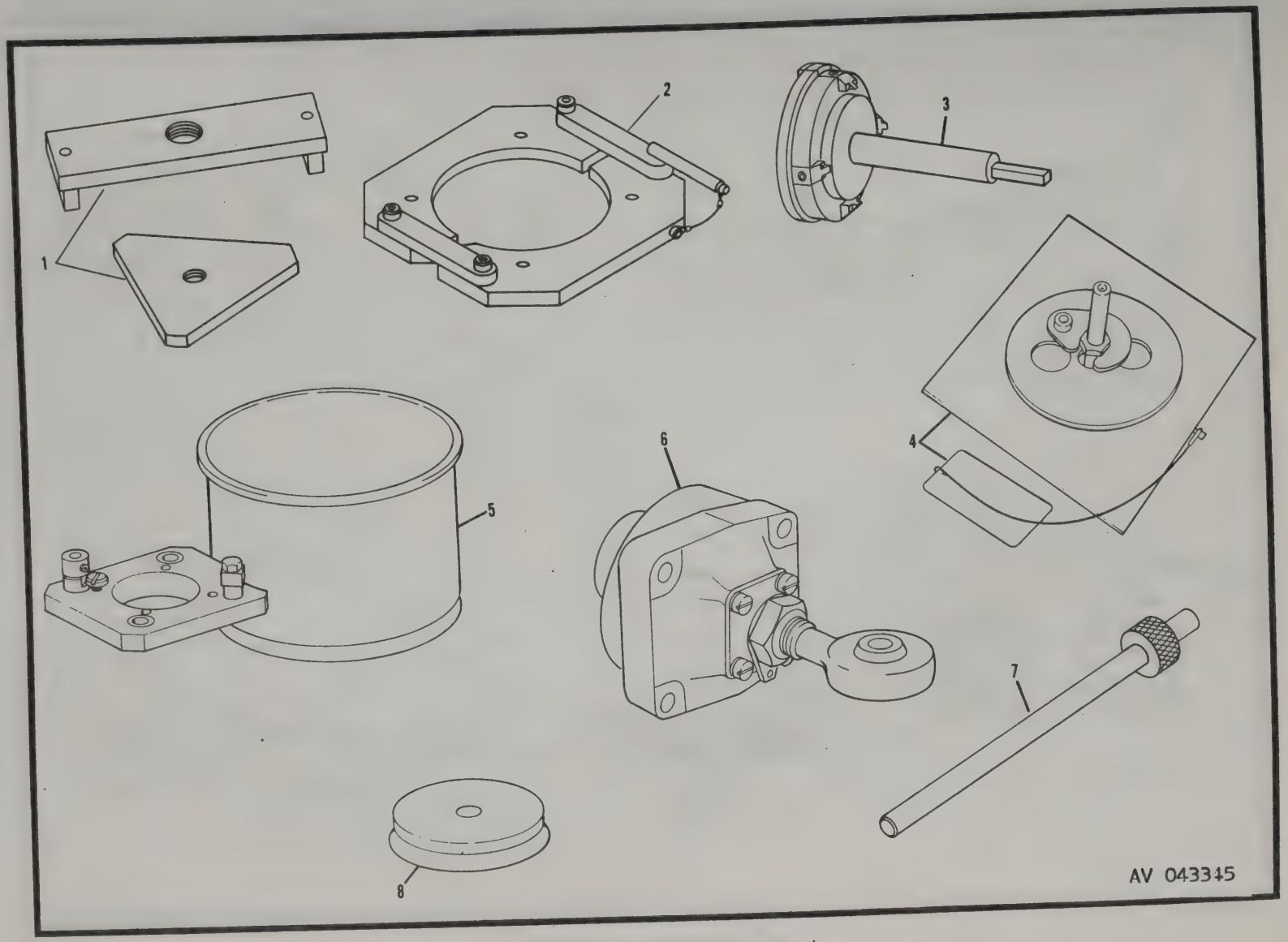

Figure A14. Airframe Tools

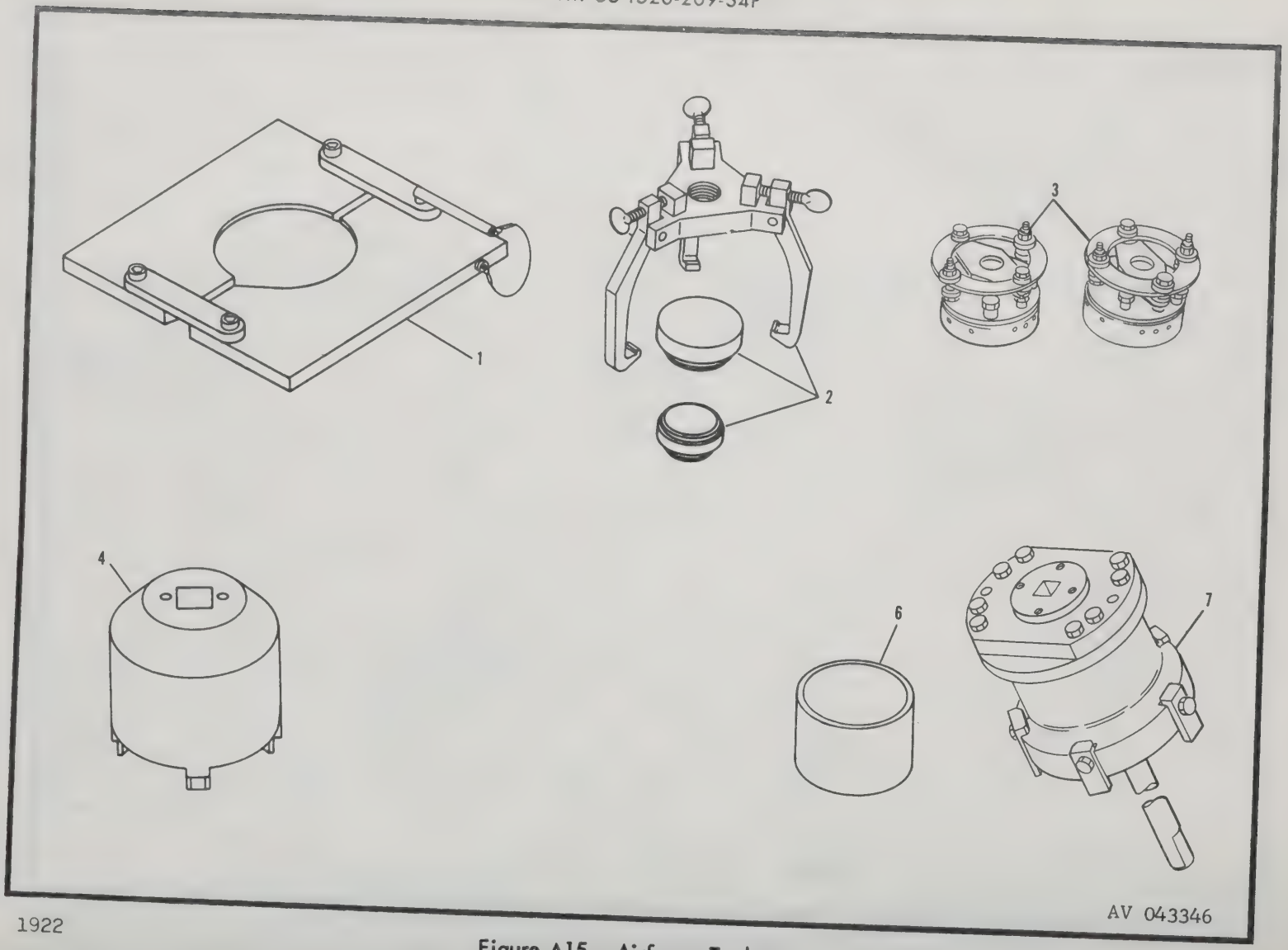

1922

Figure A15. Airframe Tools

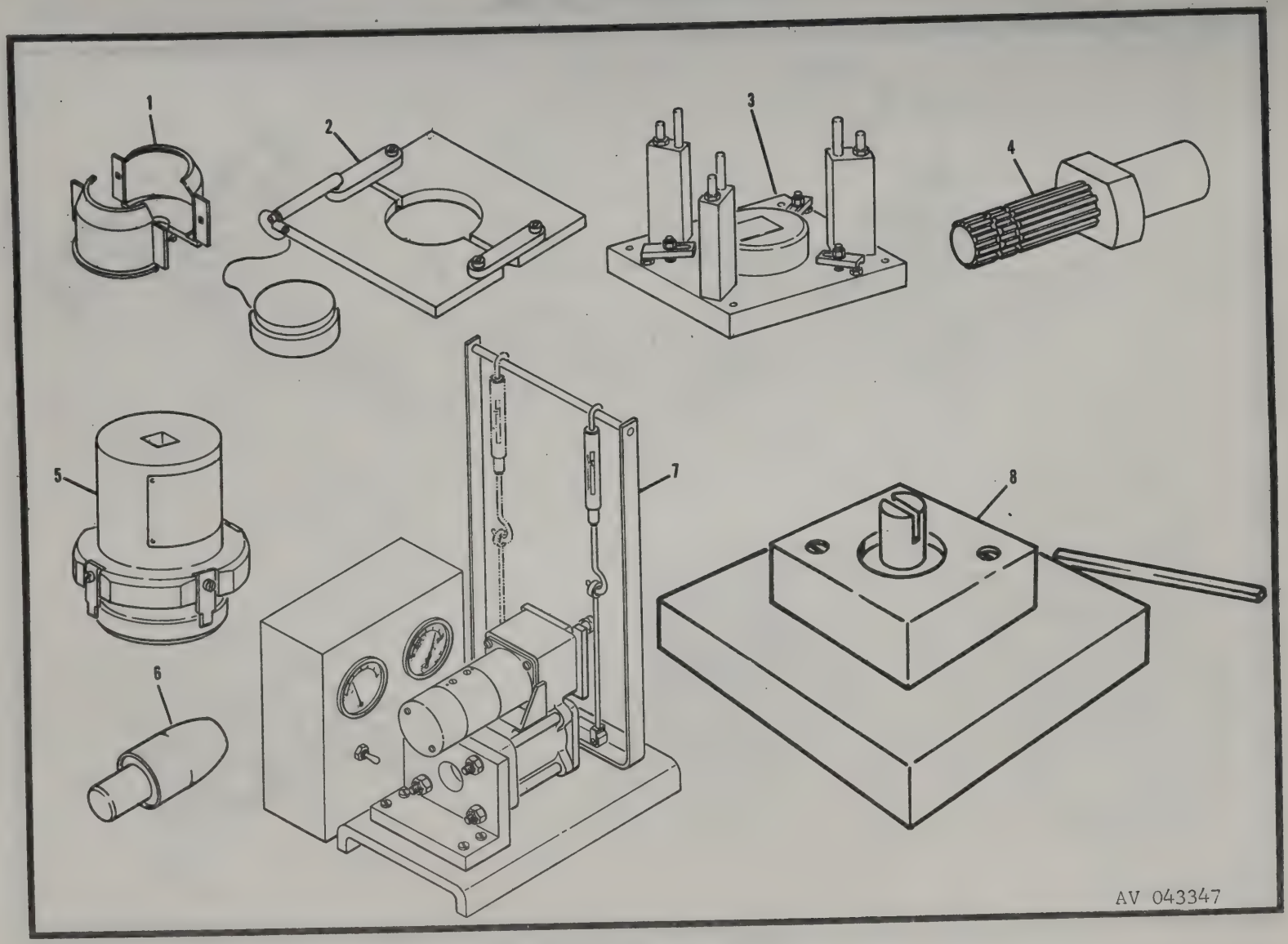

Figure A16. Airframe Tools

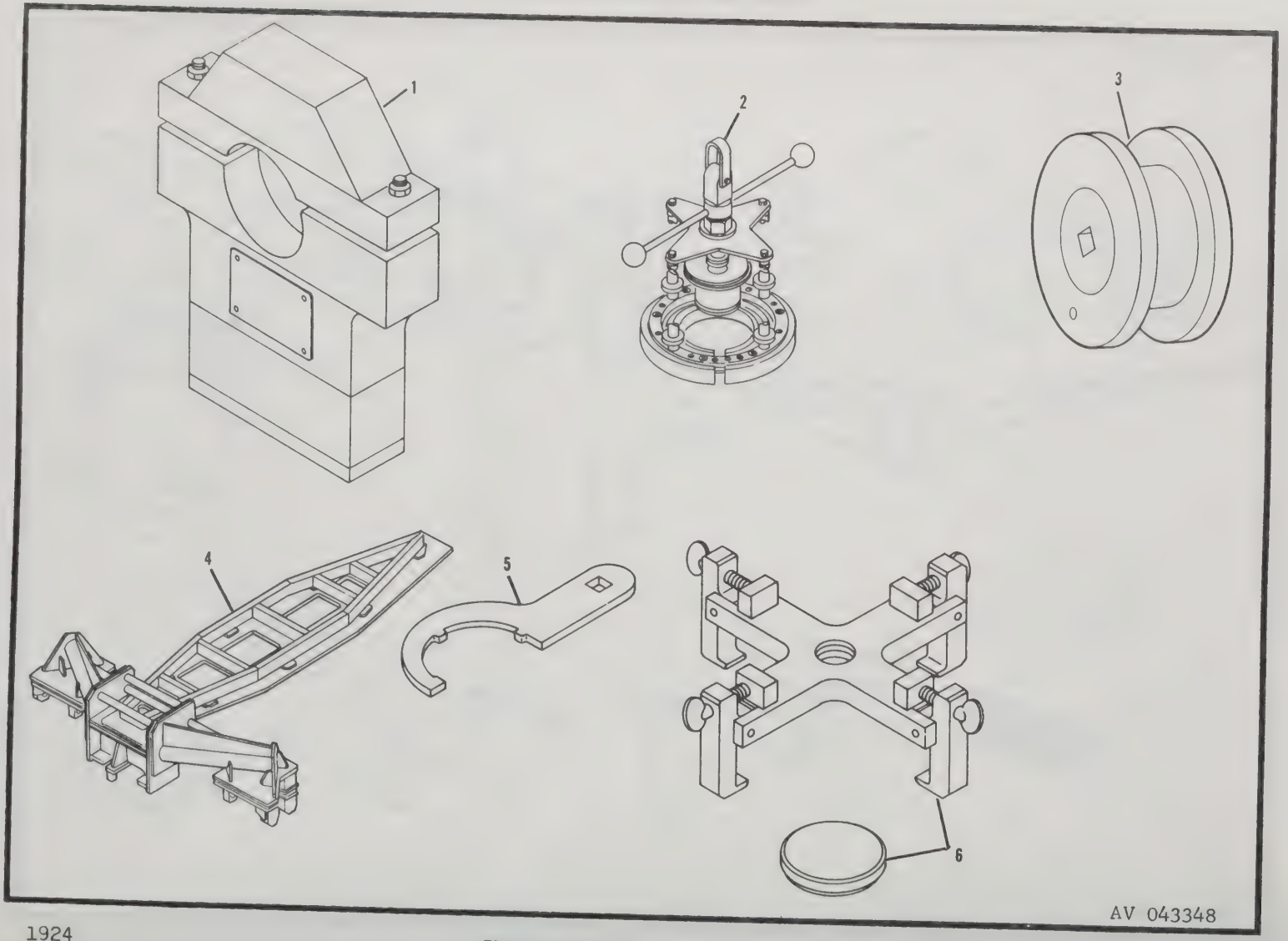

1924

Figure A17. Airframe Tools

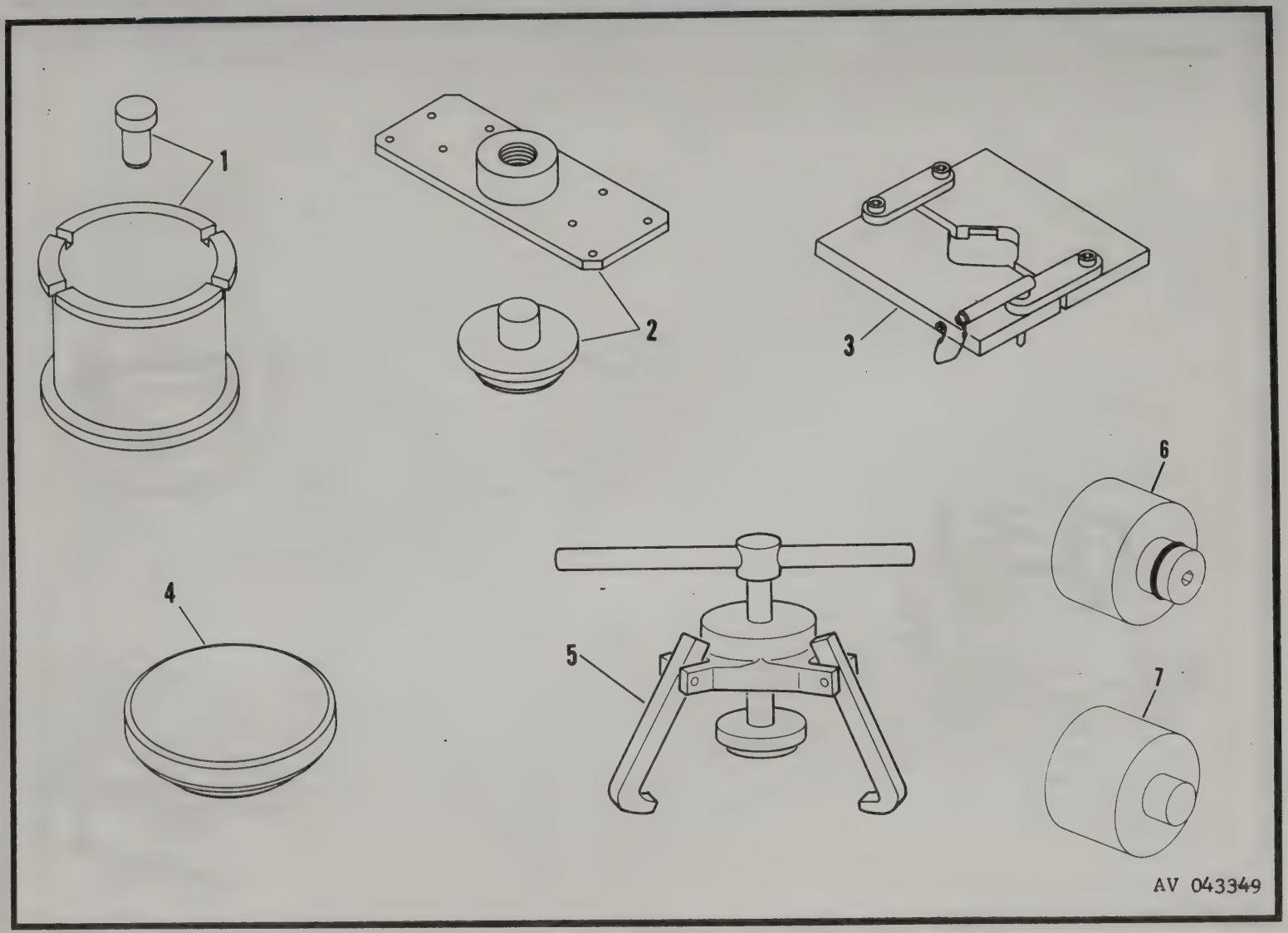

Figure A18. Airframe Tools

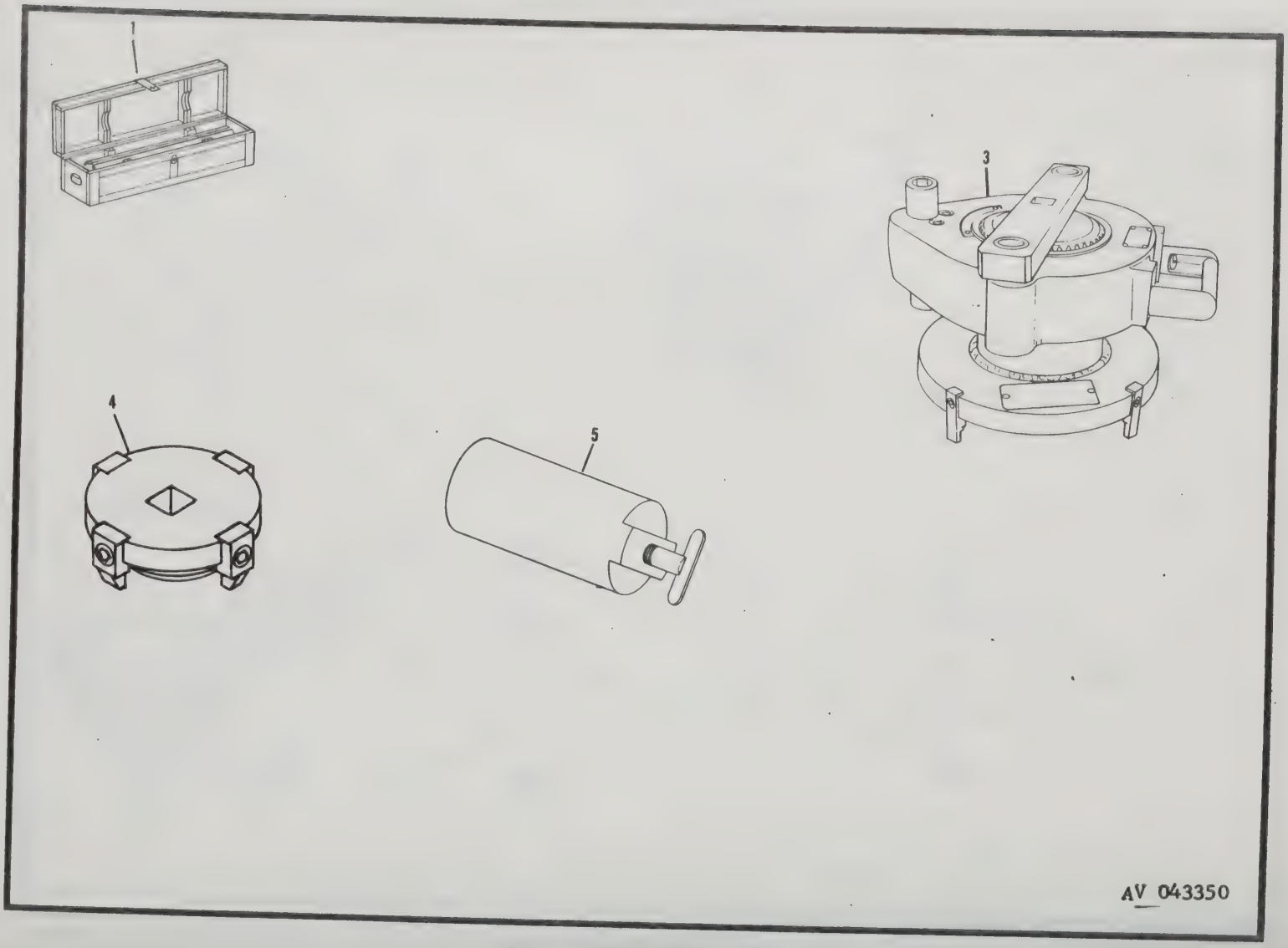

Figure A19. Airframe Tools

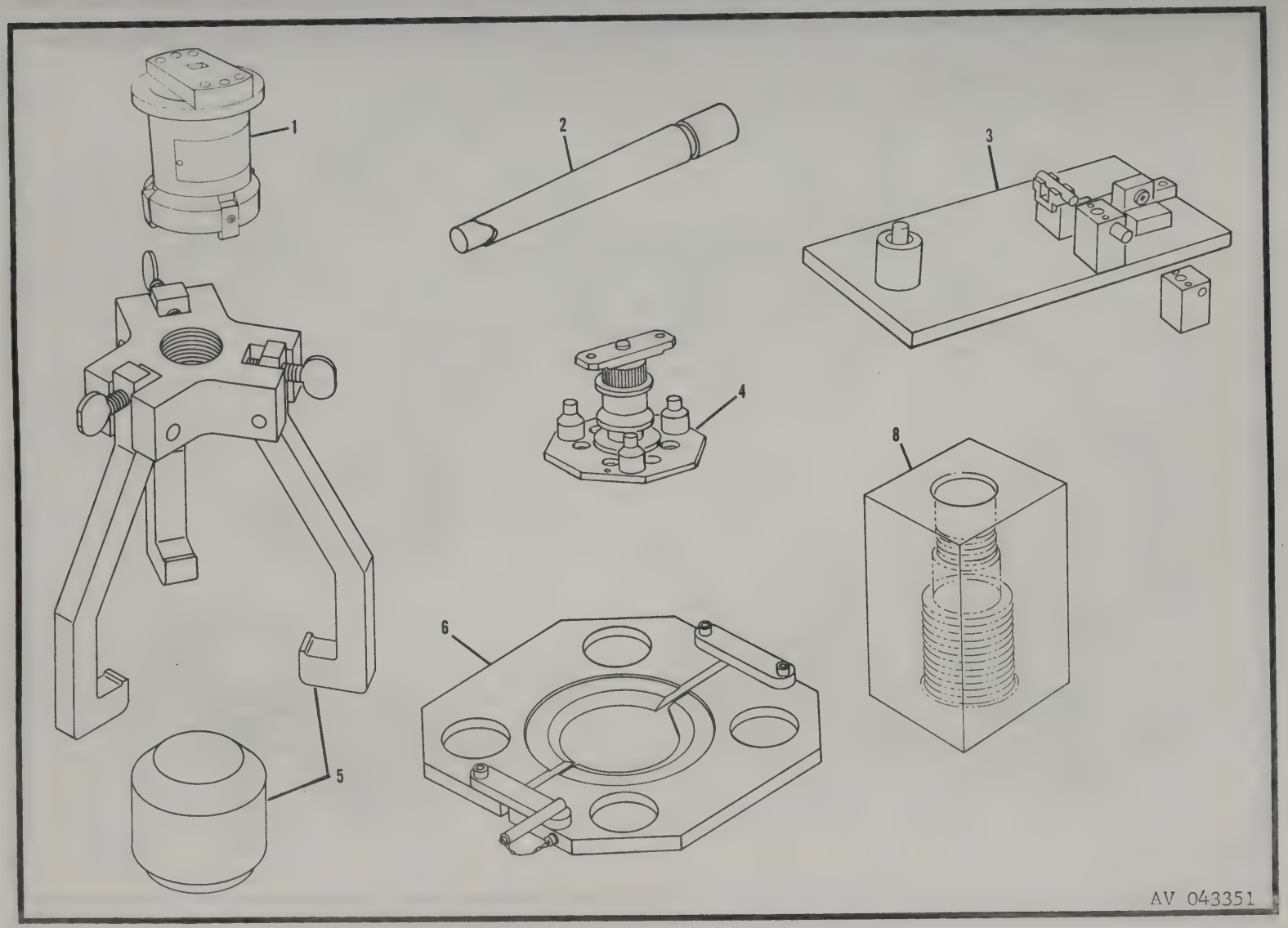

1927

Figure A20. Airframe Tools

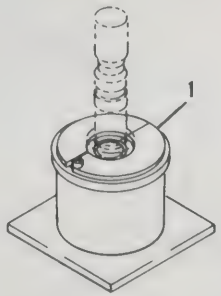

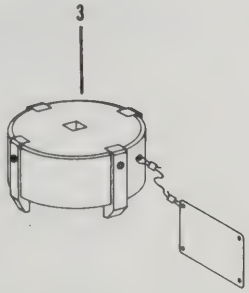

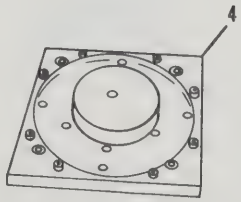

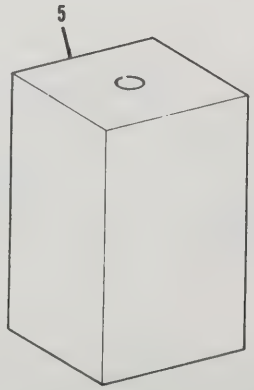

AV 043352

1928

Figure A21. Airframe Tools

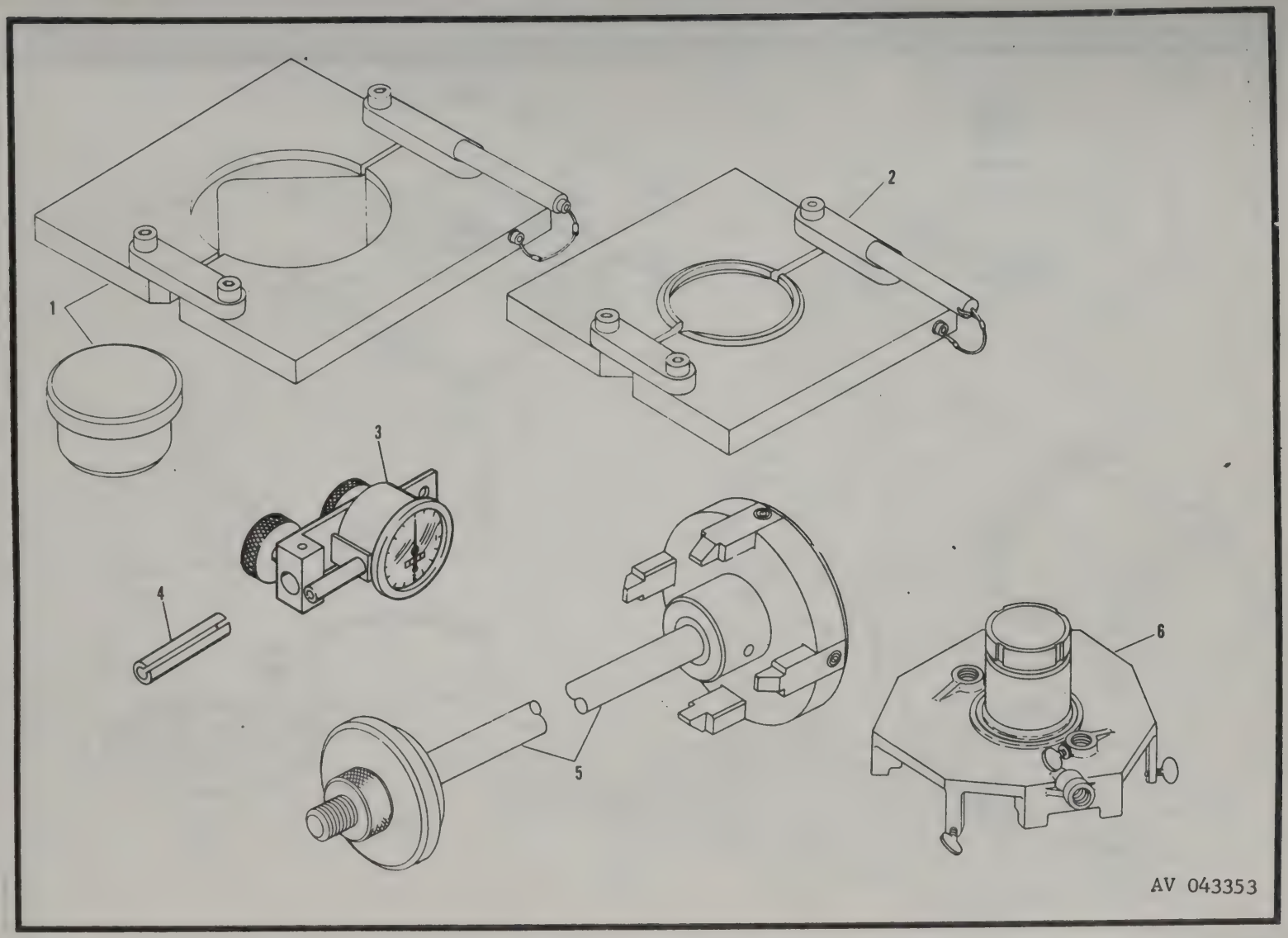

Figure A22. Airframe Tools

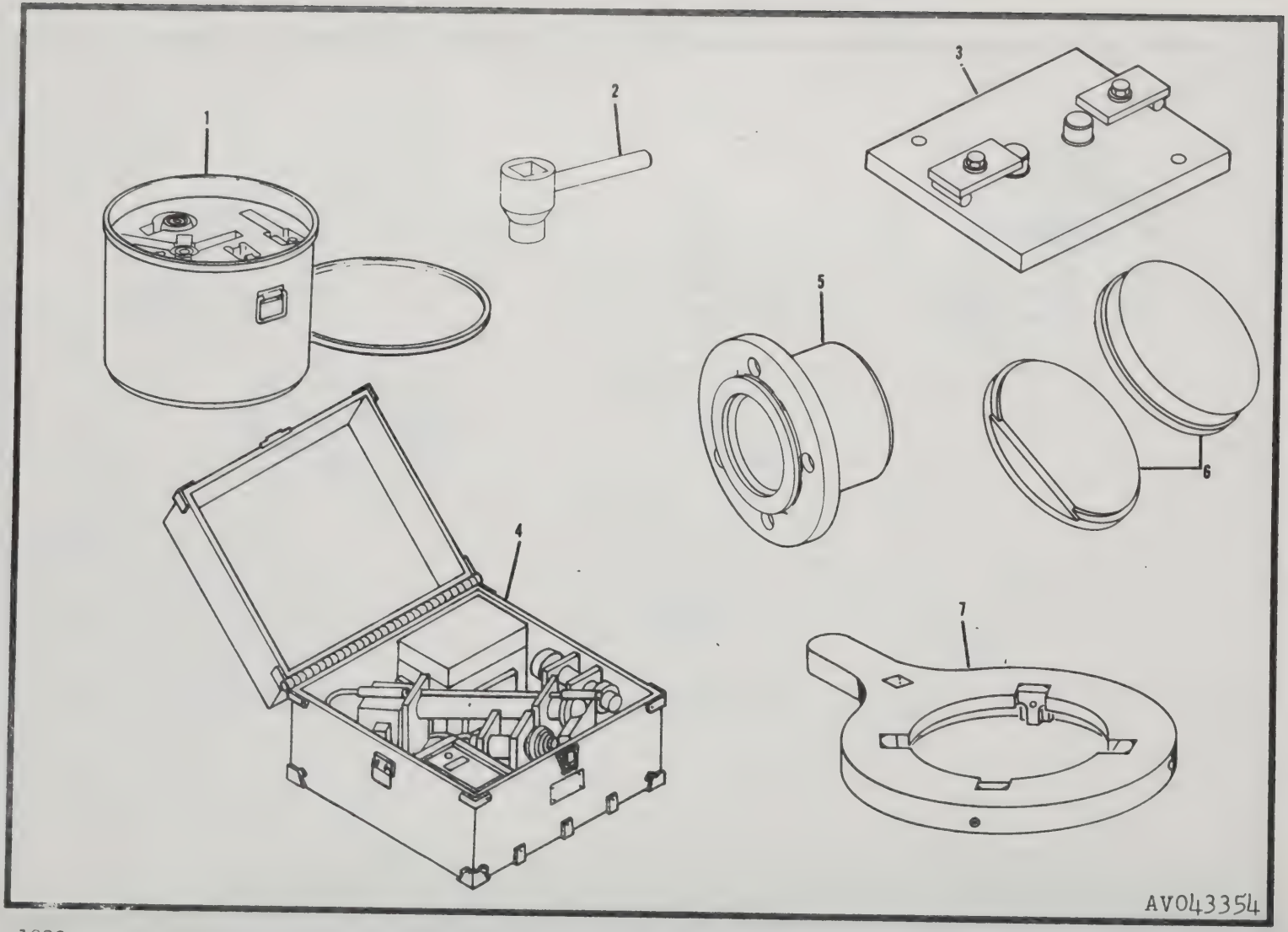

Figure A23. Airframe Tools

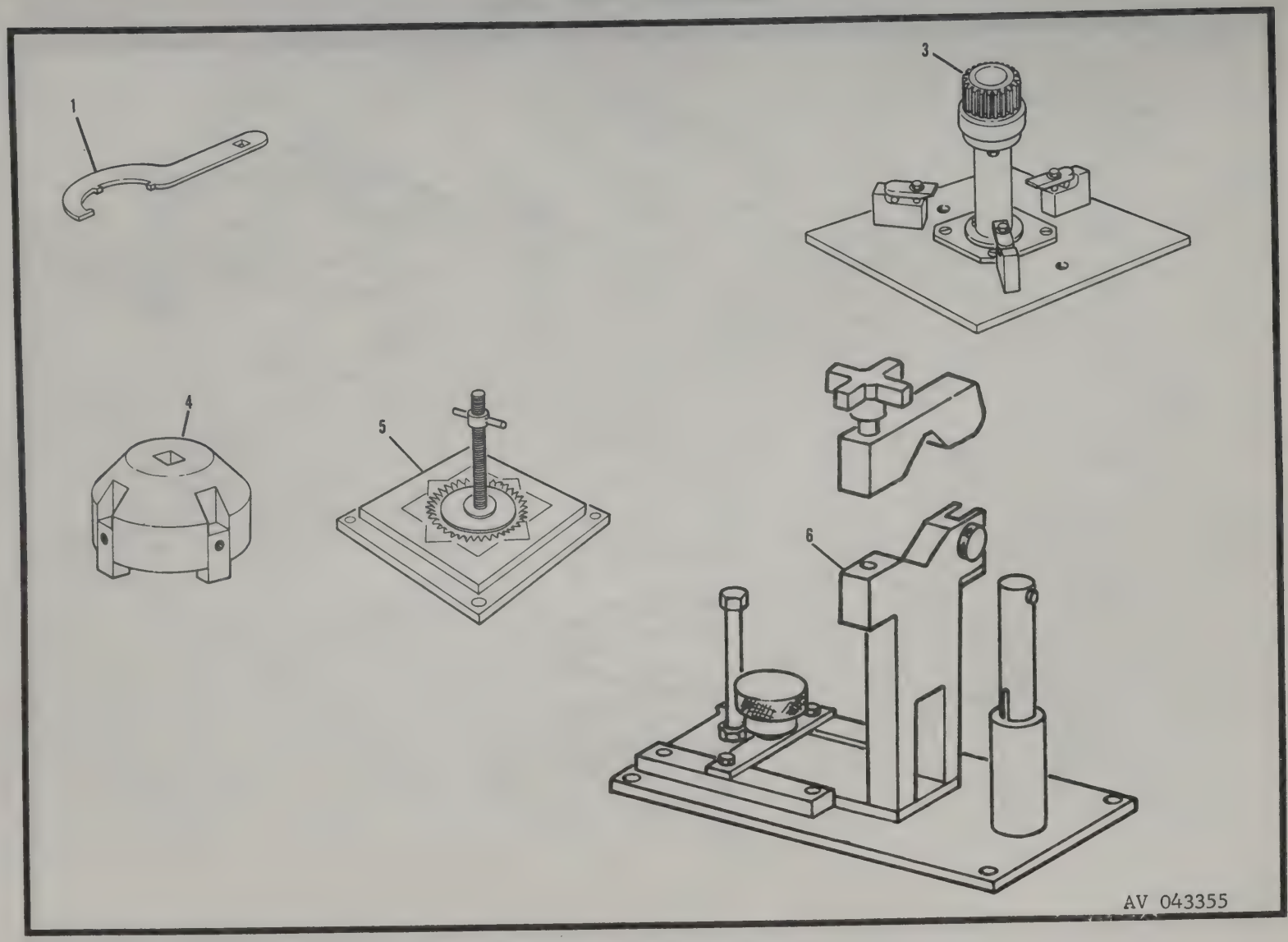

Figure A24. Airframe Tools

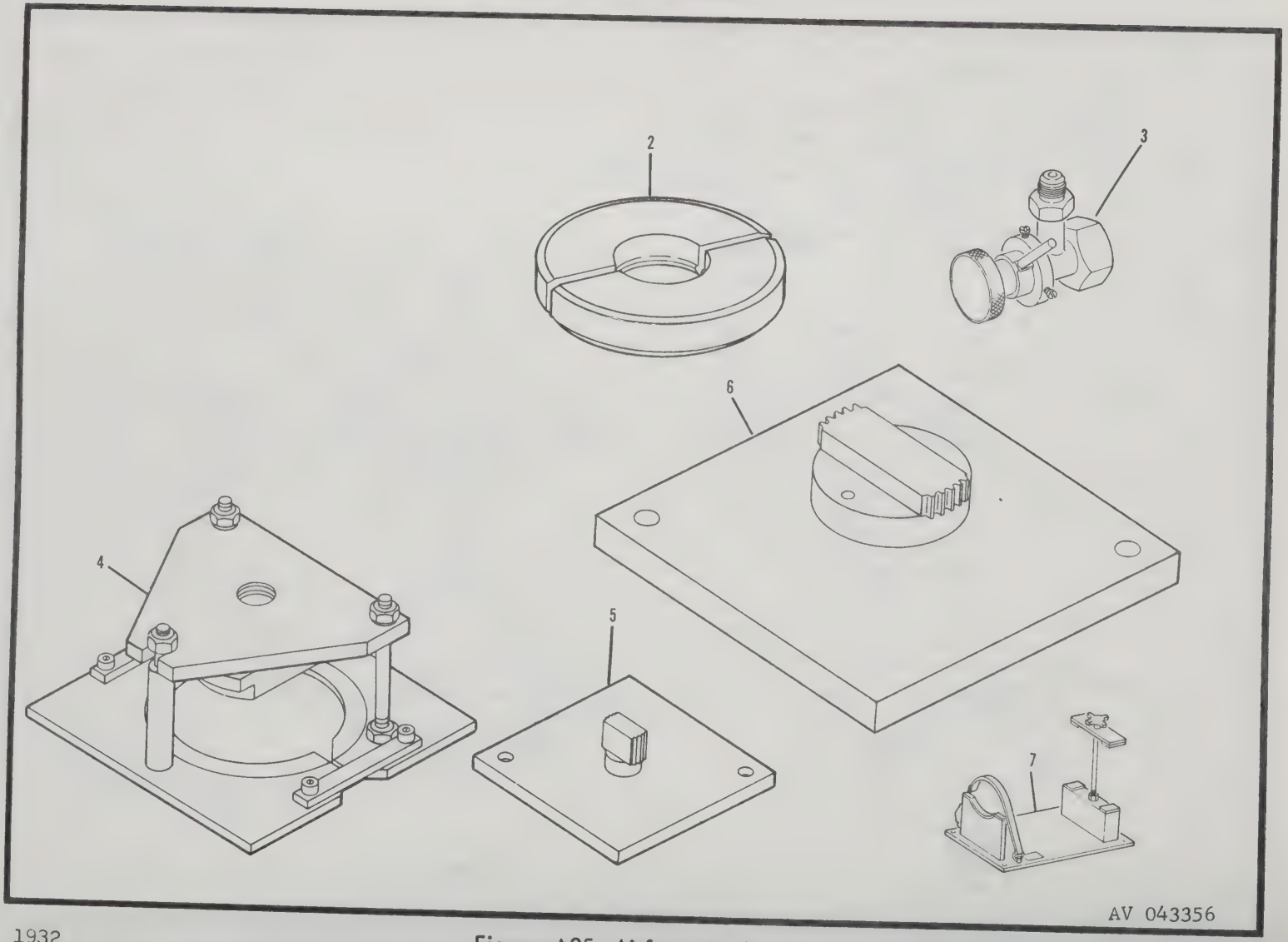

1932

Figure A25. Airframe Tools

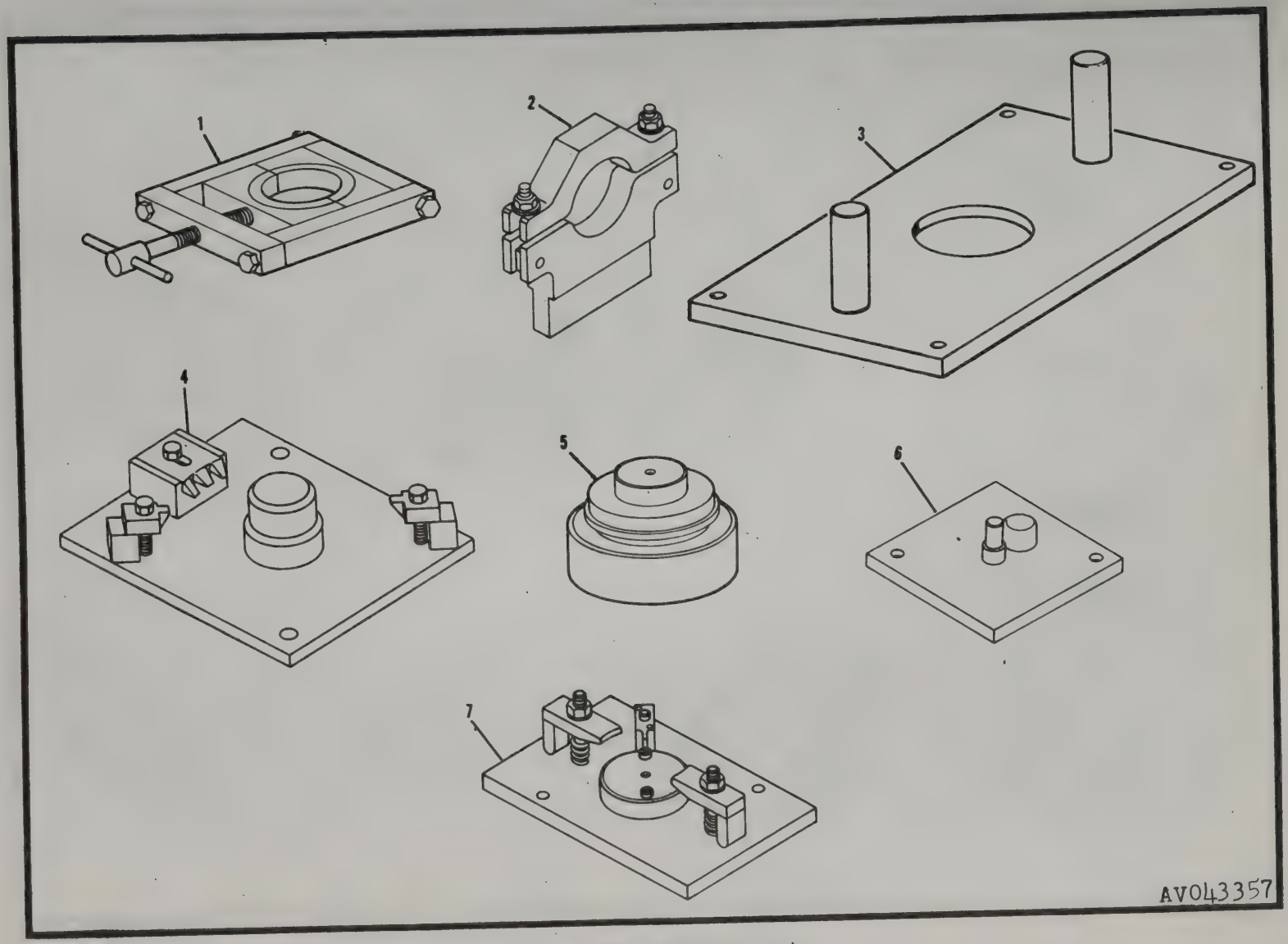

Figure A26. Airframe Tools

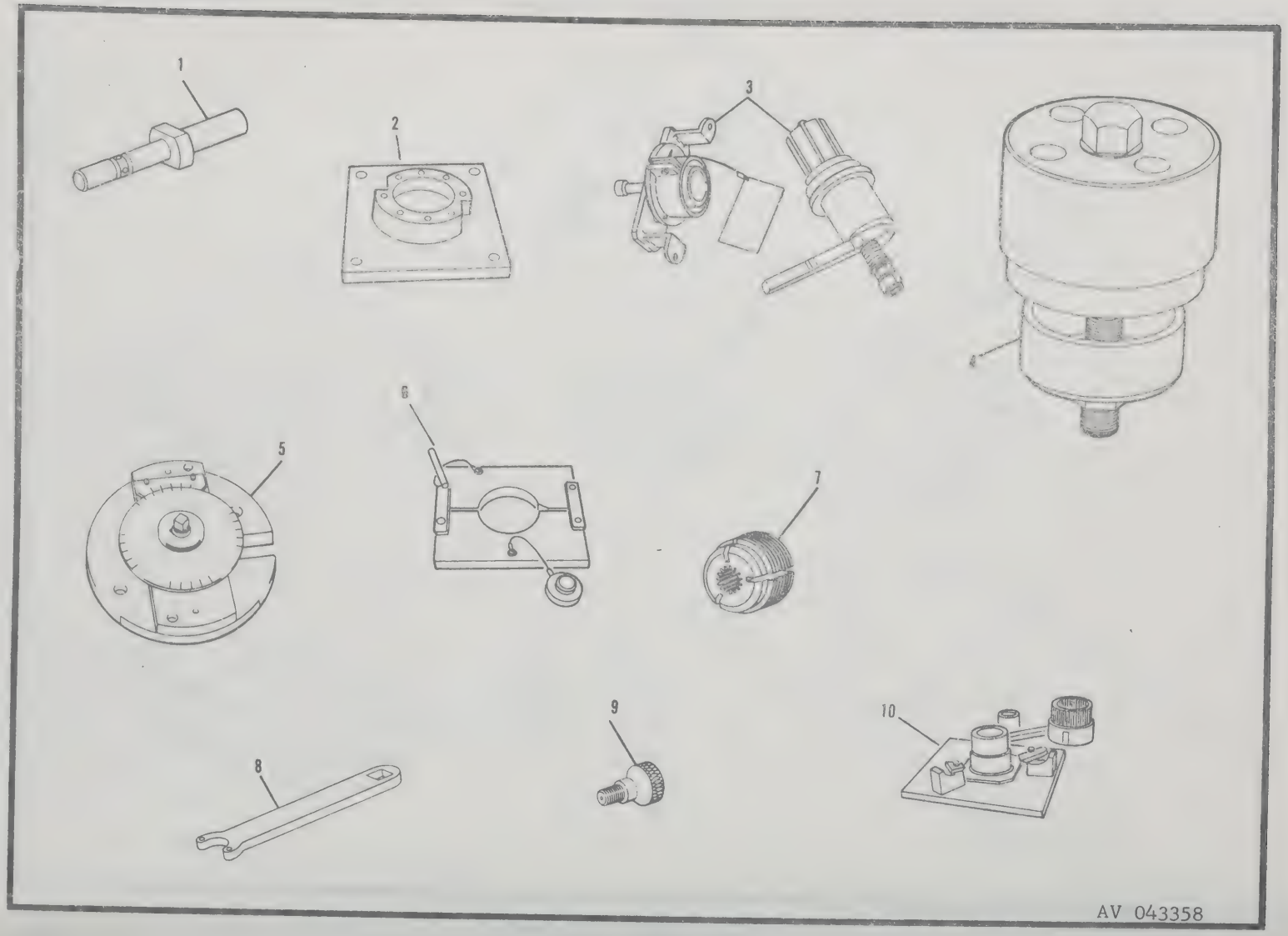

1934

Figure A27. Airframe Tools

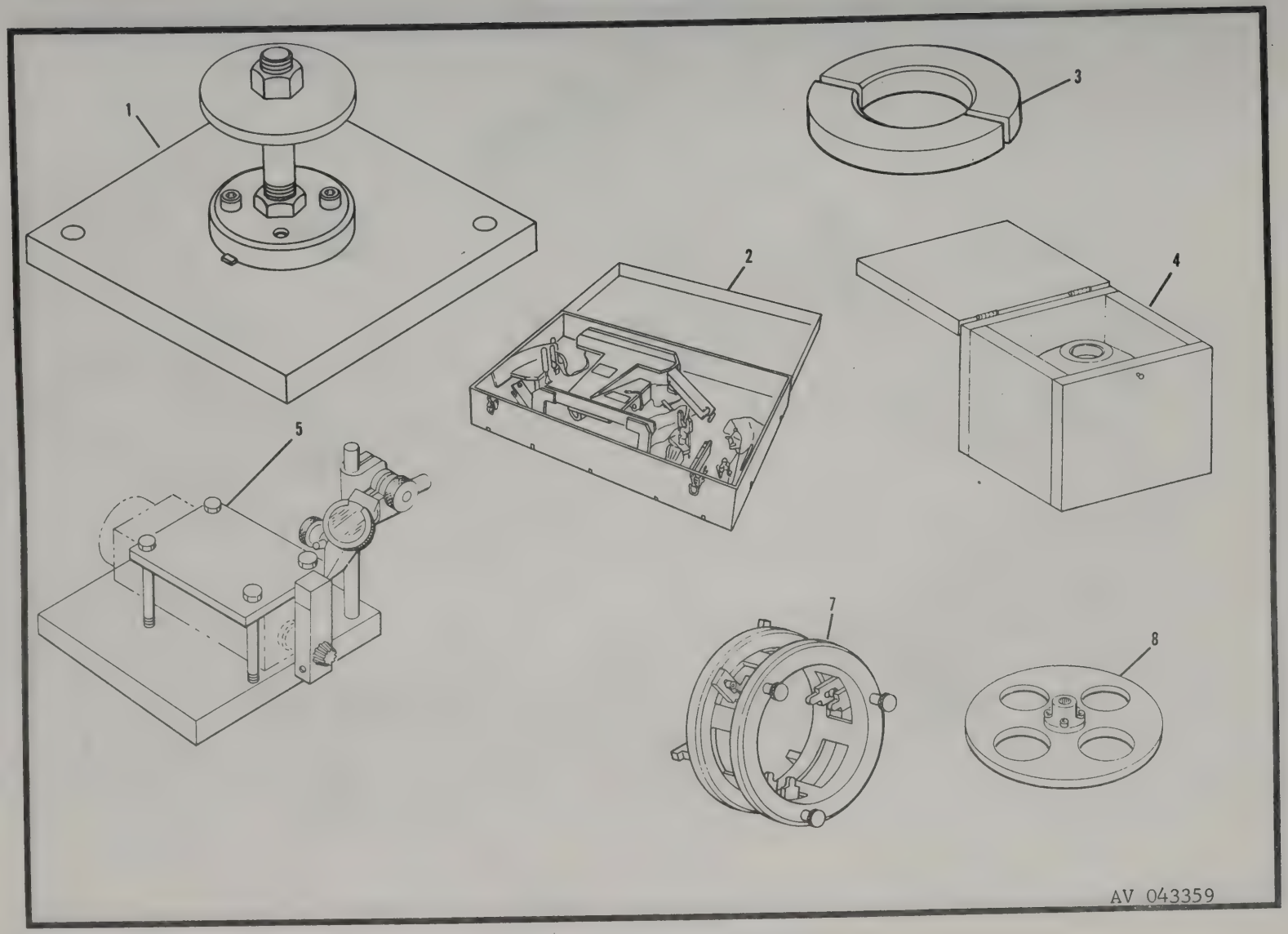

Figure A28. Airframe Tools

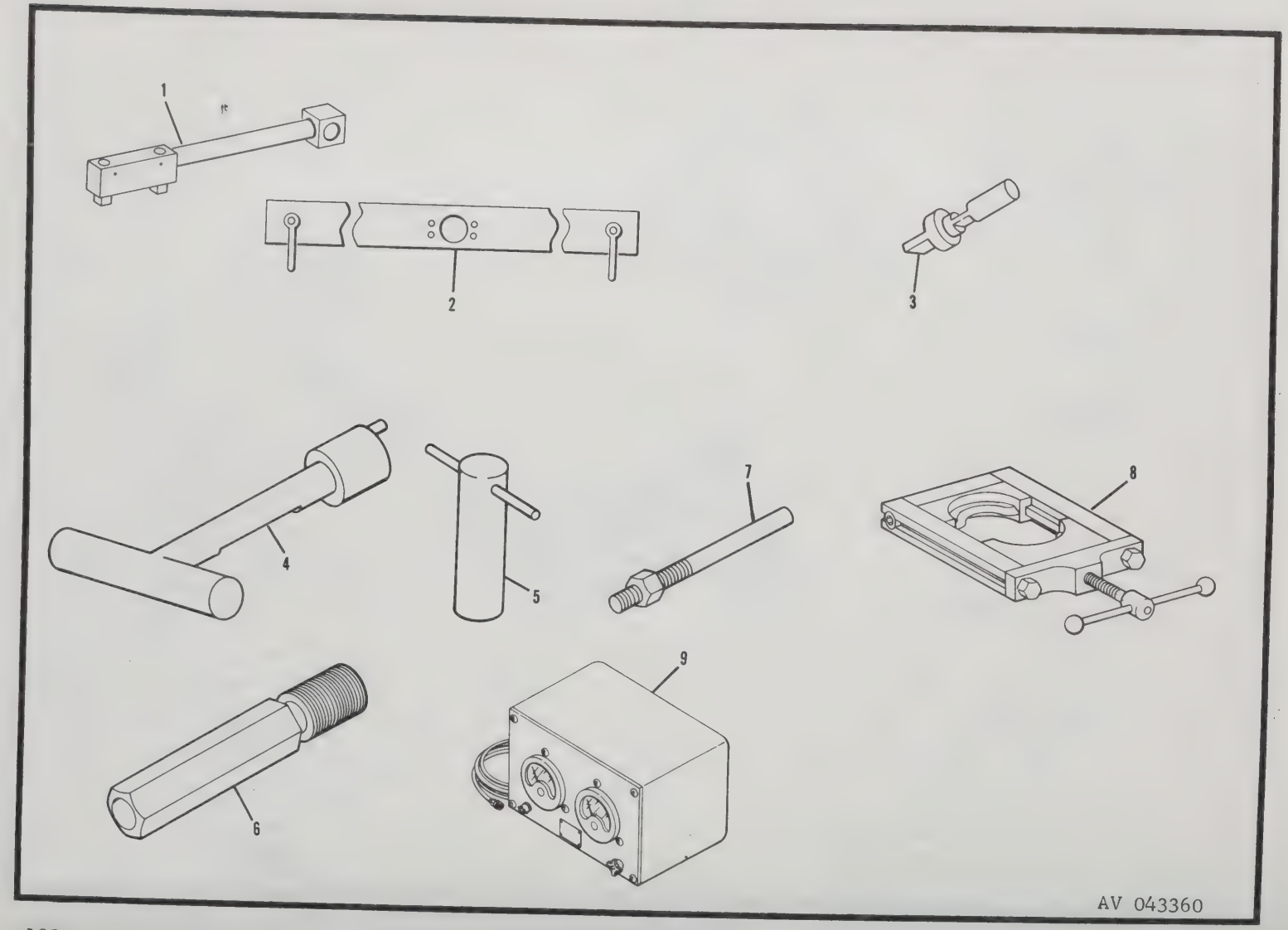

1936

Figure A29. Airframe Tools

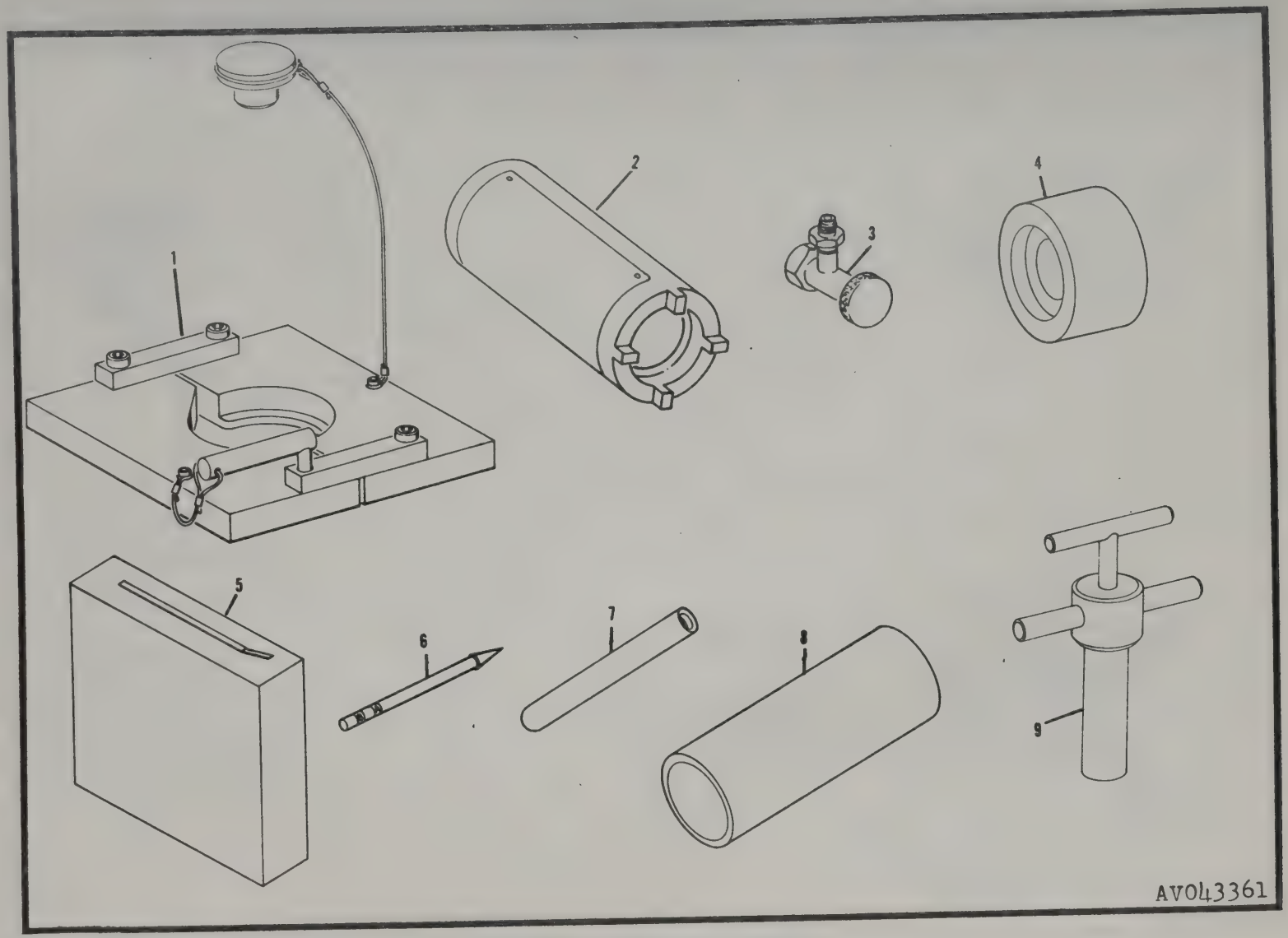

Figure A30. Airframe Tools

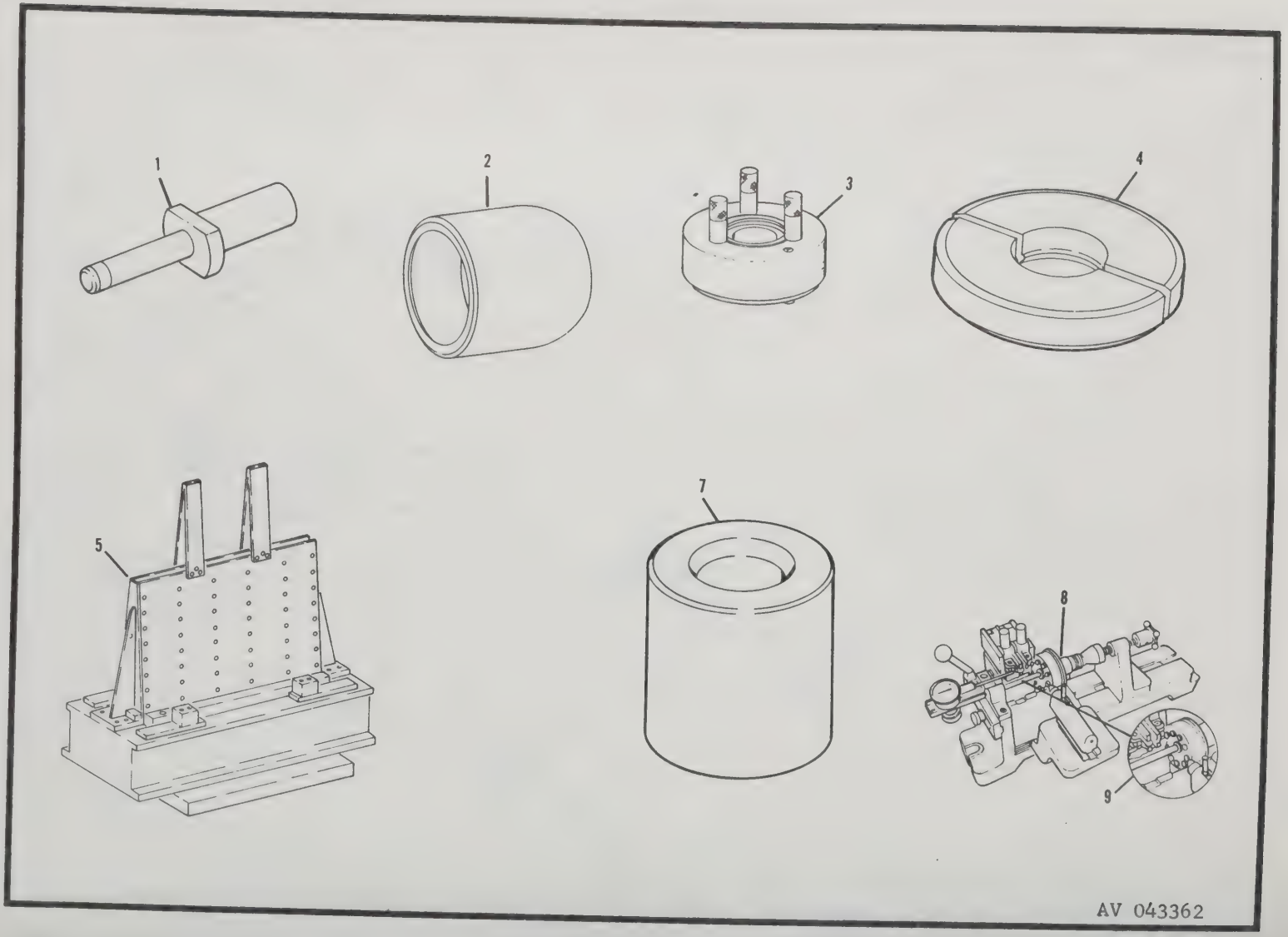

1938

Figure A31. Airframe Tools

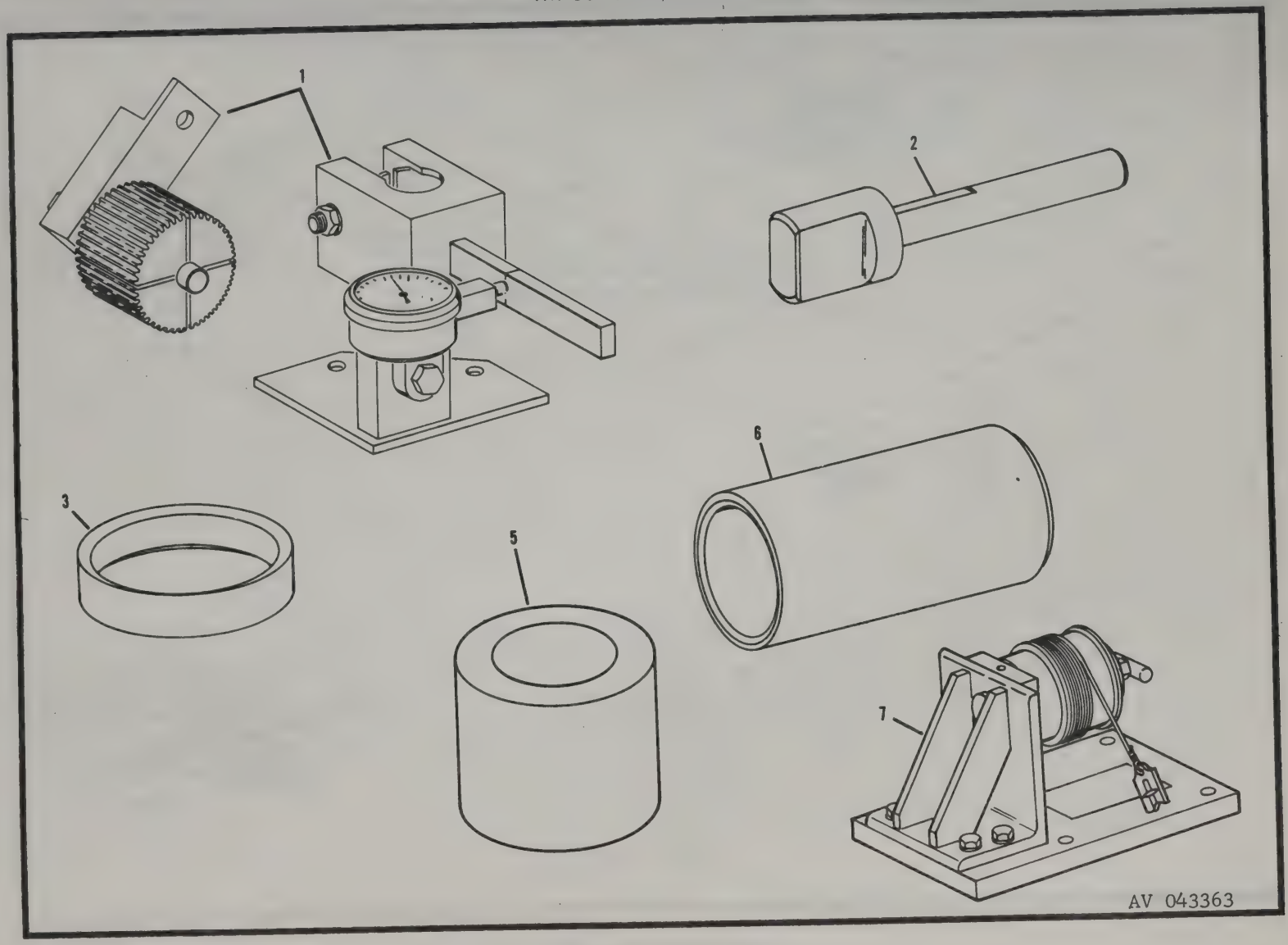

Figure A32. Airframe Tools

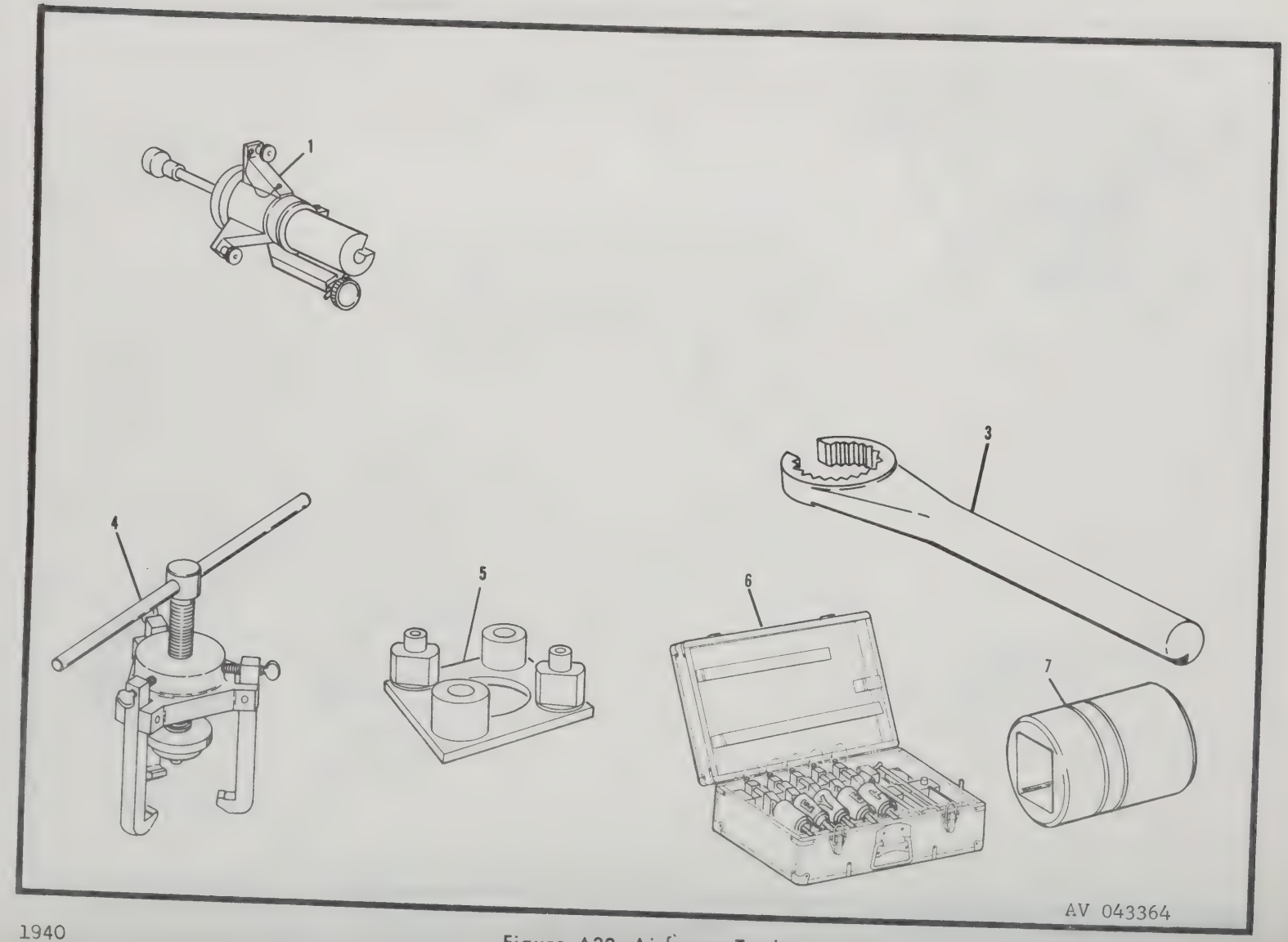

1940

Figure A33. Airframe Tools

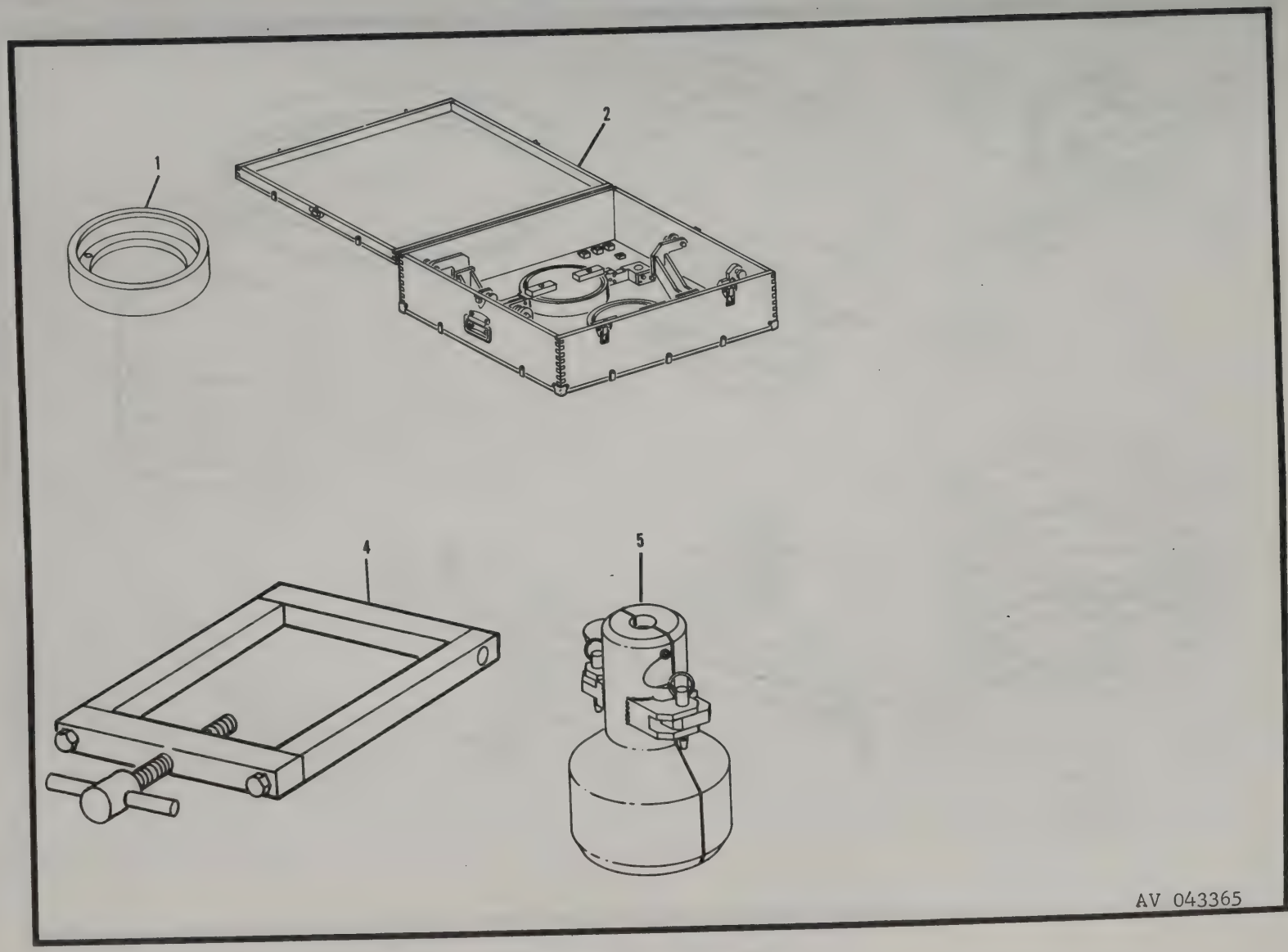

Figure A34. Airframe Tools

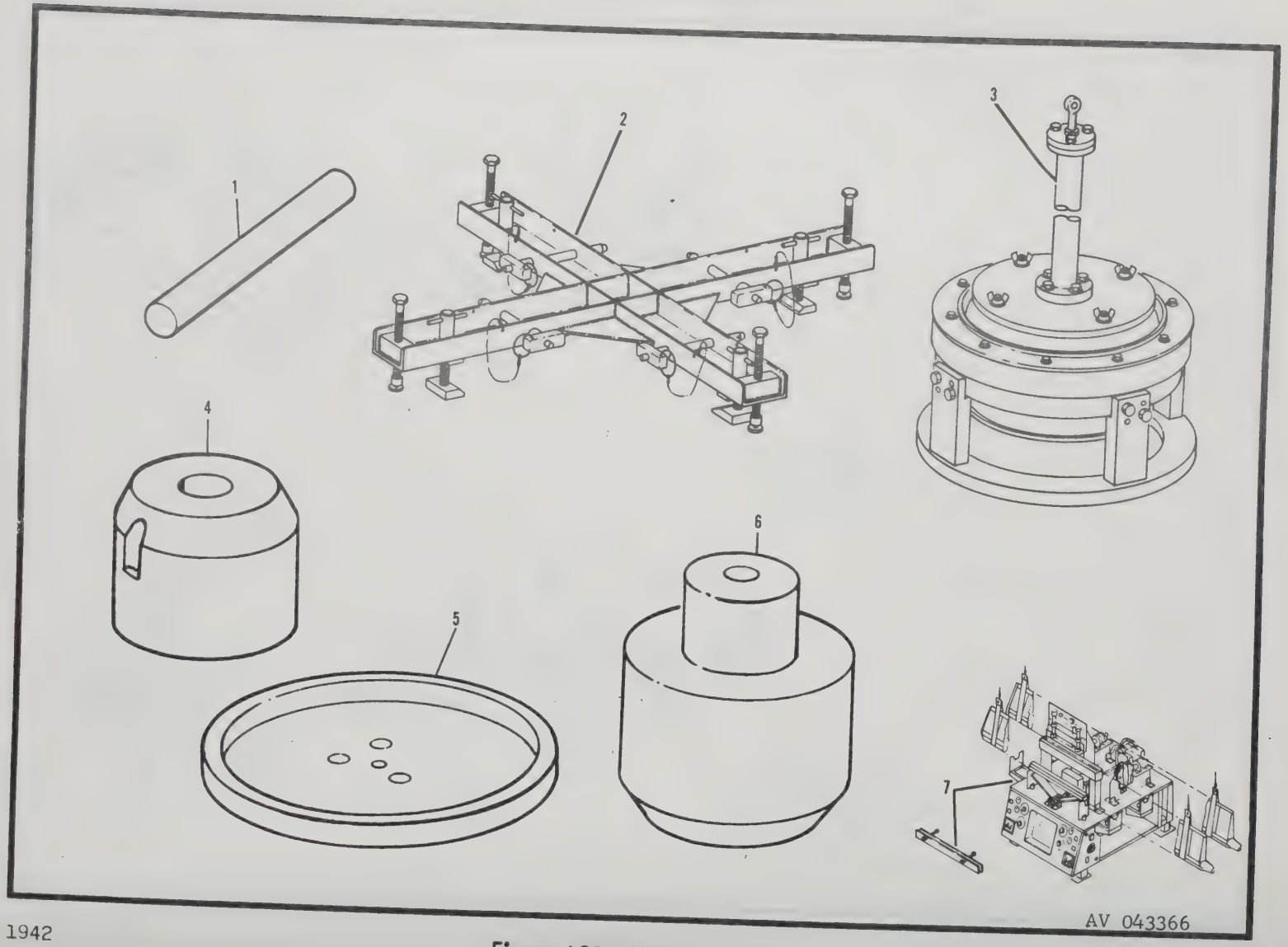

1942

Figure A35. Airframe Tools

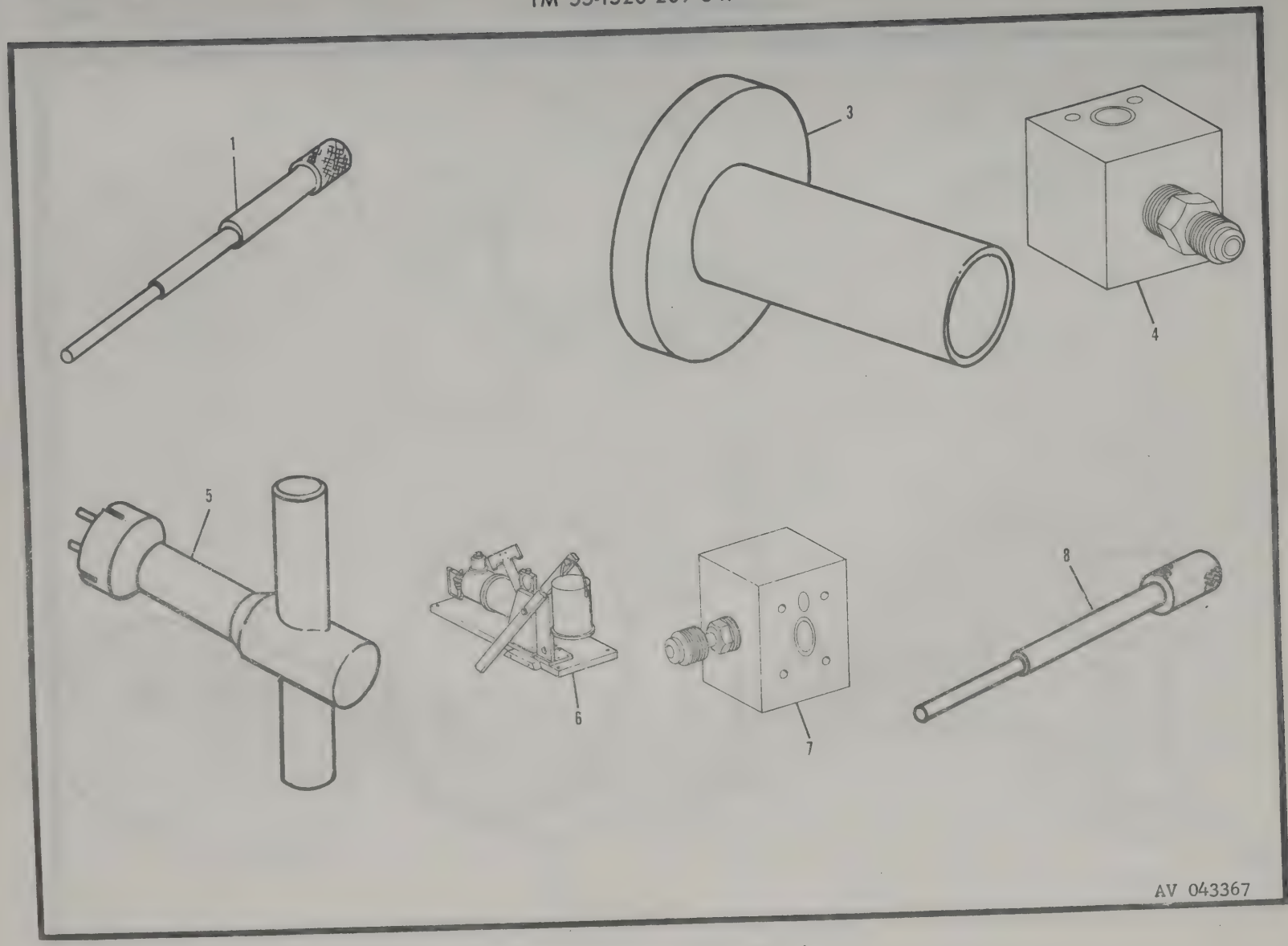

Figure A36. Airframe Tools

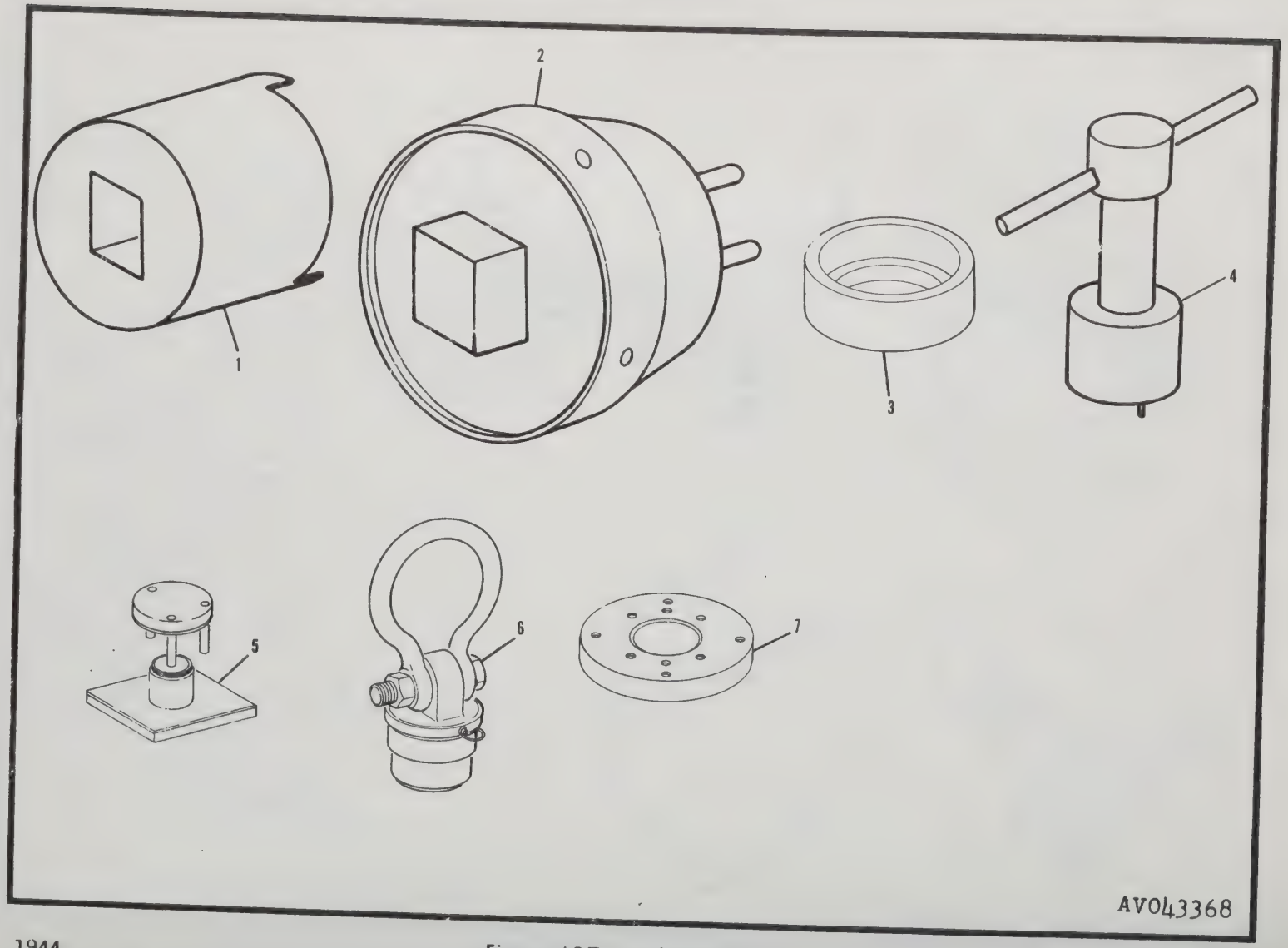

1944

Figure A37. Airframe Tools

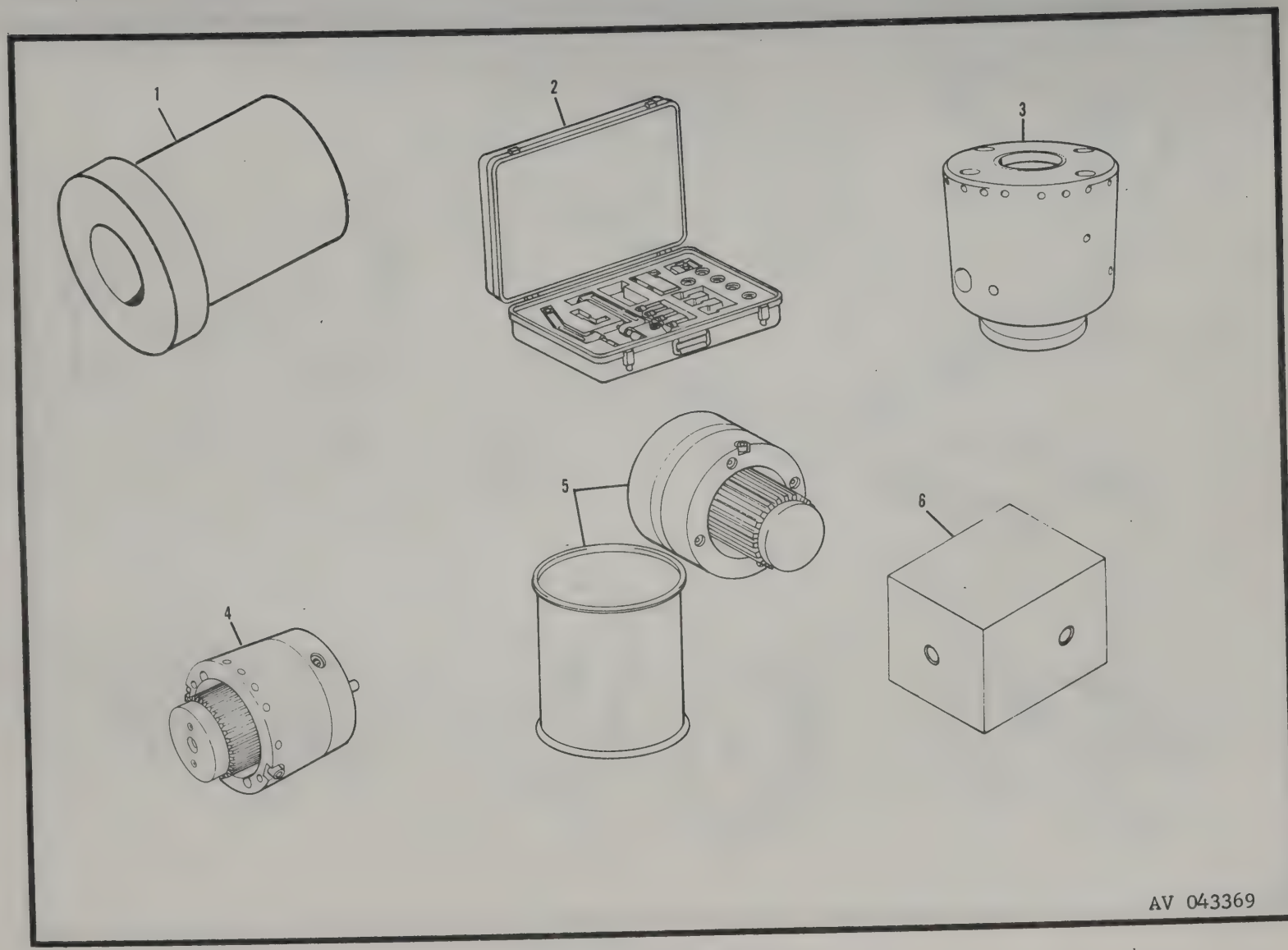

Figure A38. Airframe Tools

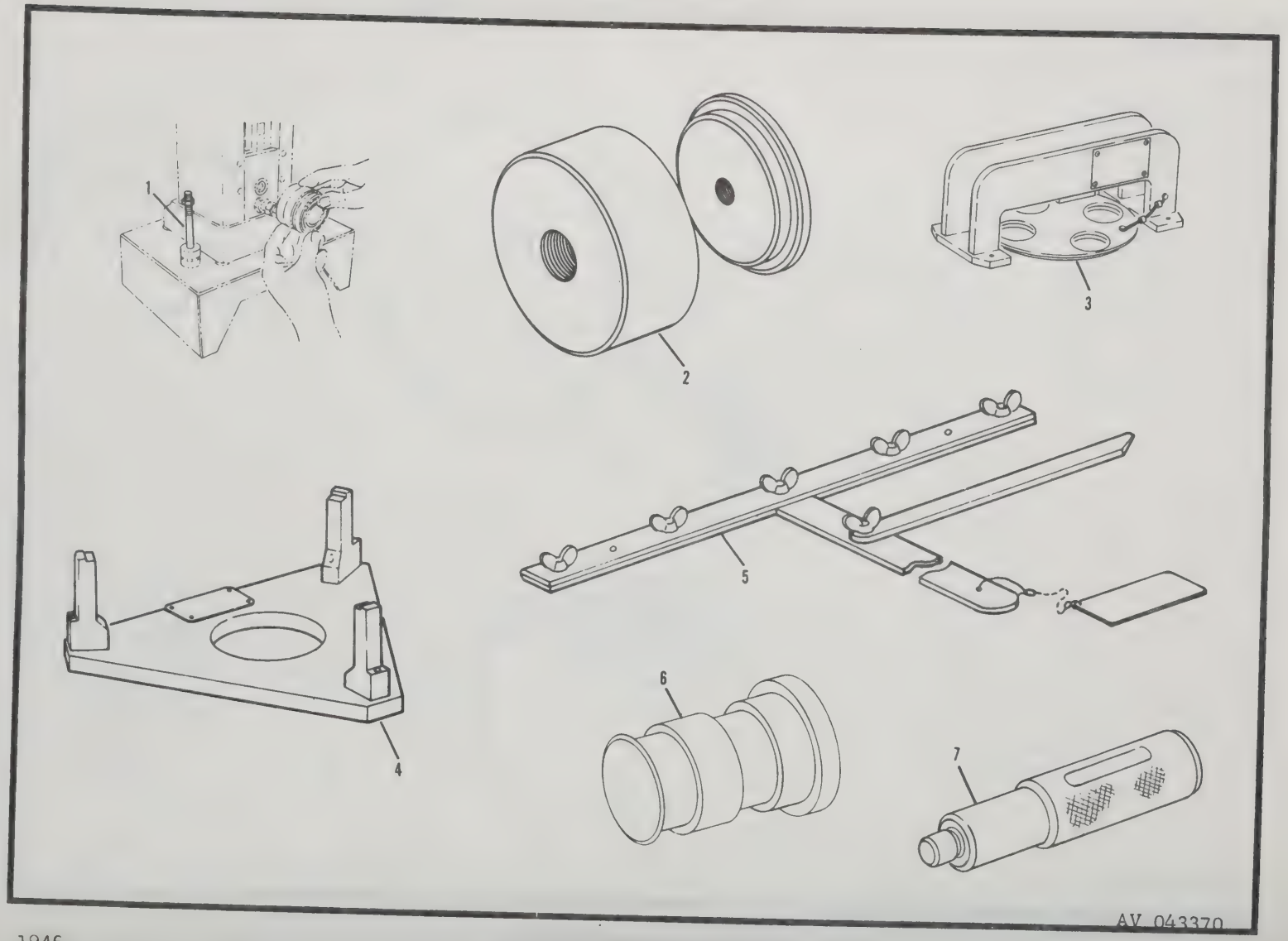

1946

Figure A39. Airframe Tools

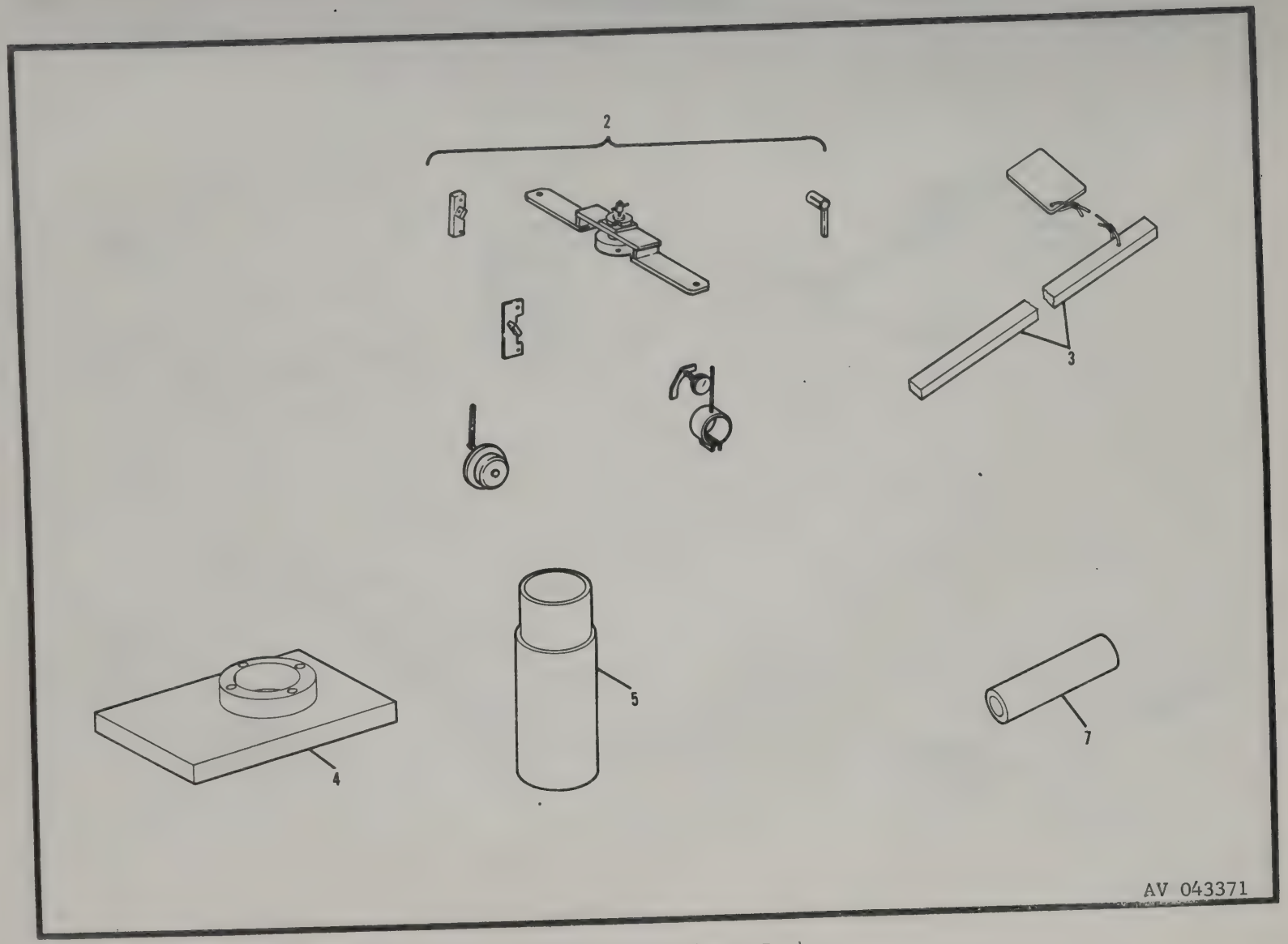

Figure A40. Airframe Tools

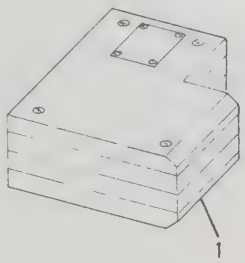

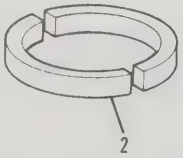

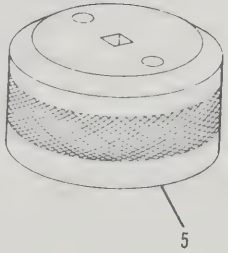

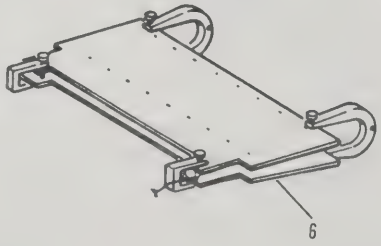

AV 043372

1948

Figure A41. Airframe Tools

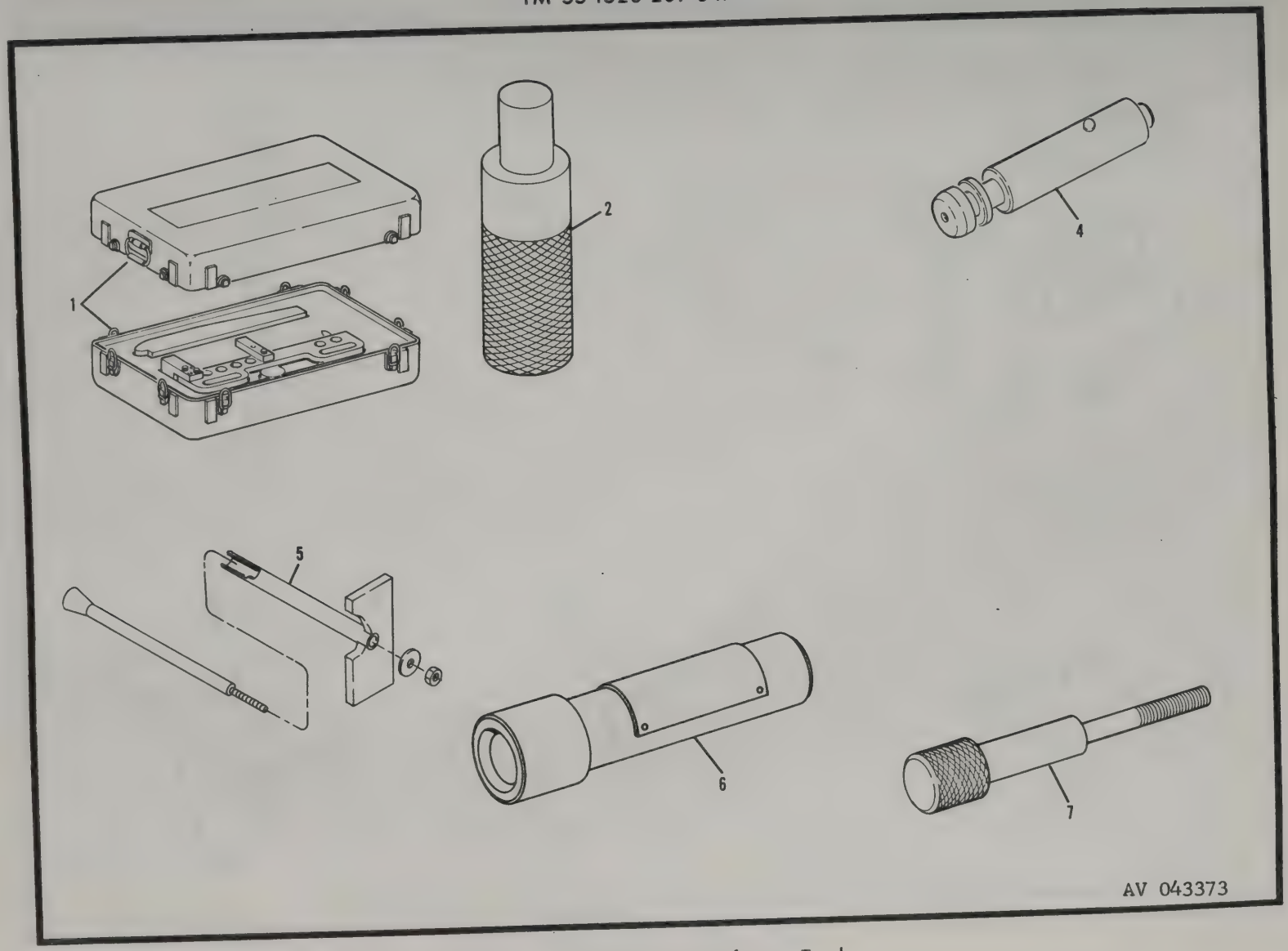

Figure A42. Airframe Tools

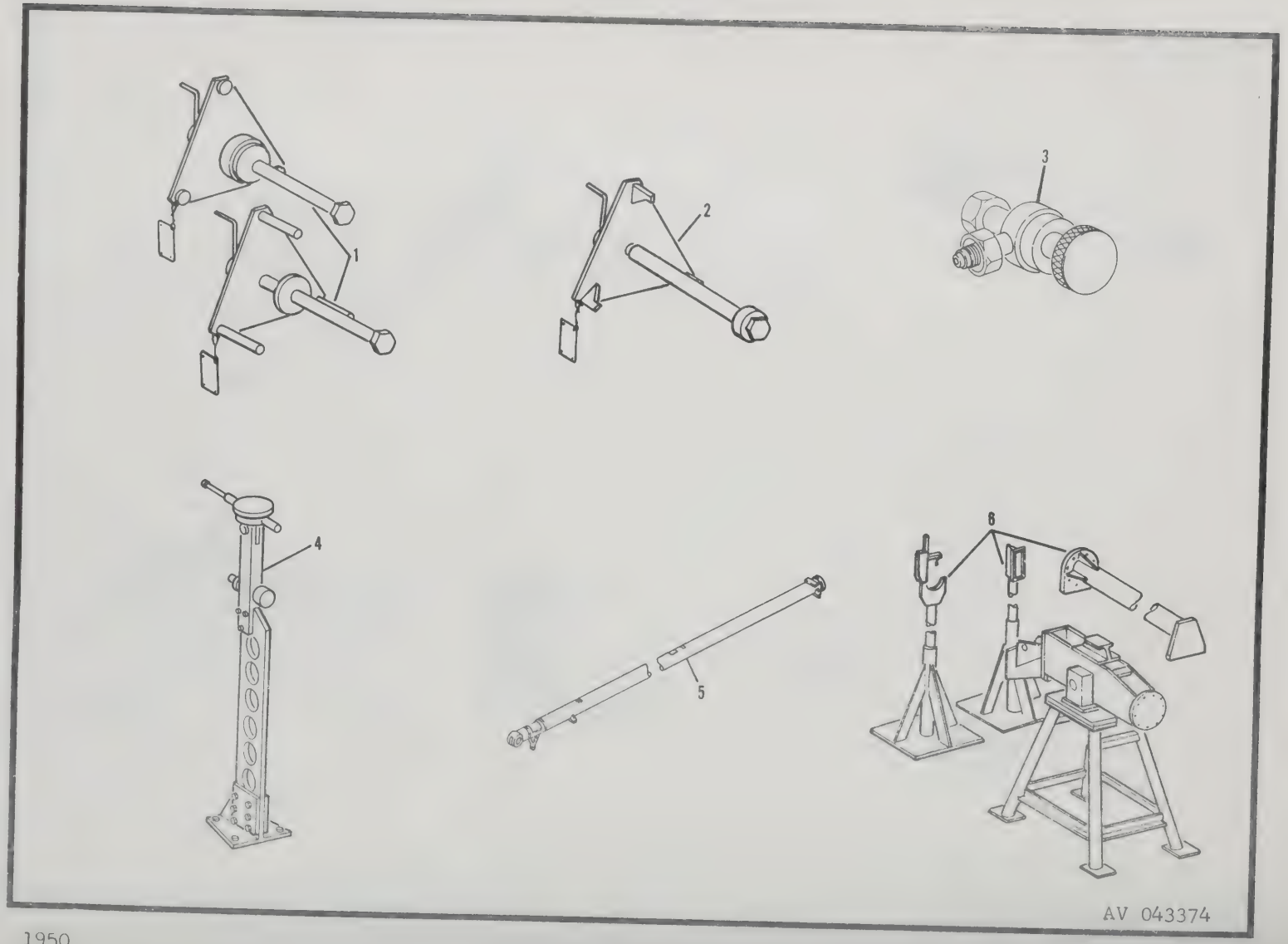

1950

Figure A43. Airframe Tools

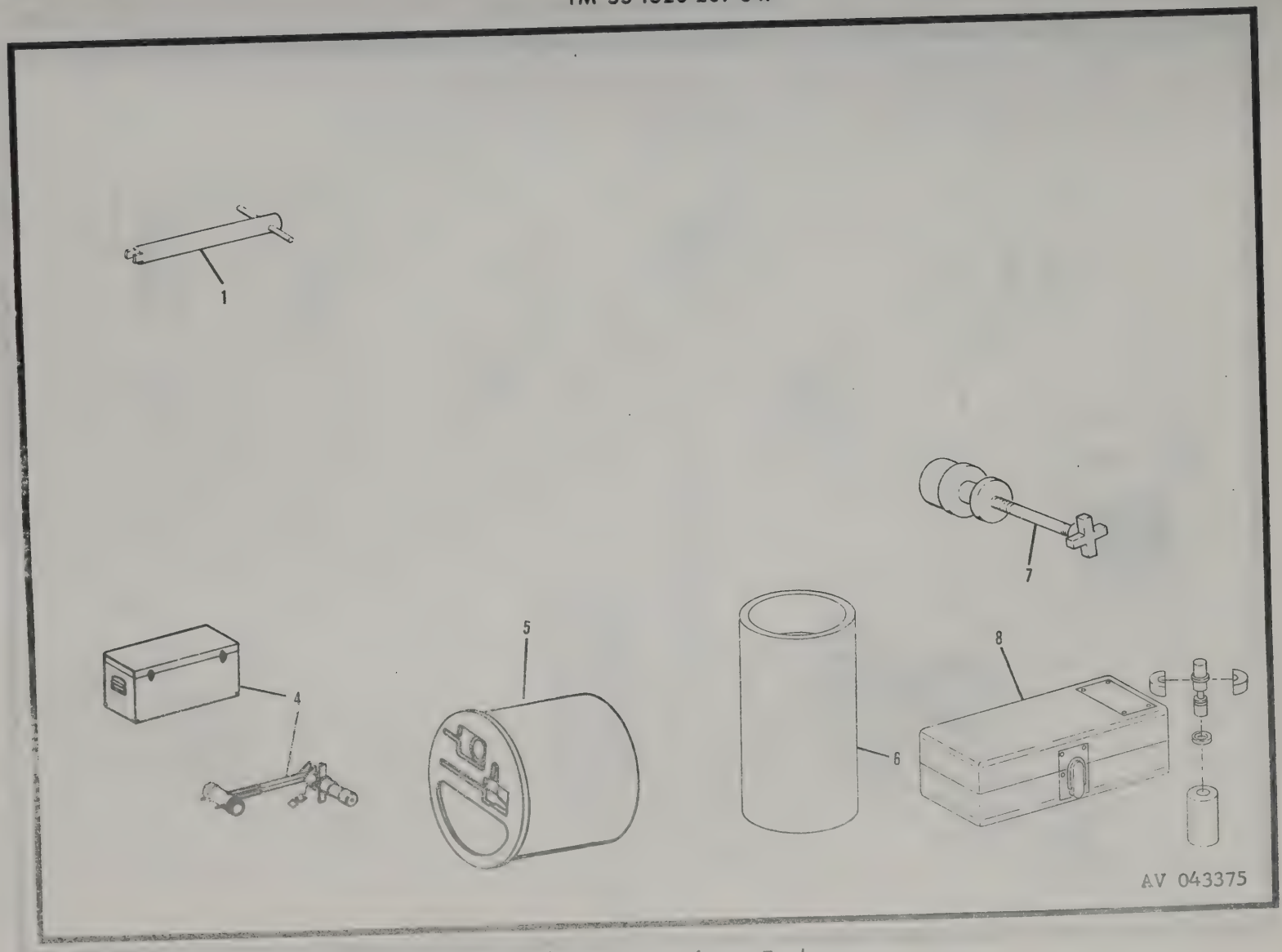

Figure A44. Airframe Tools

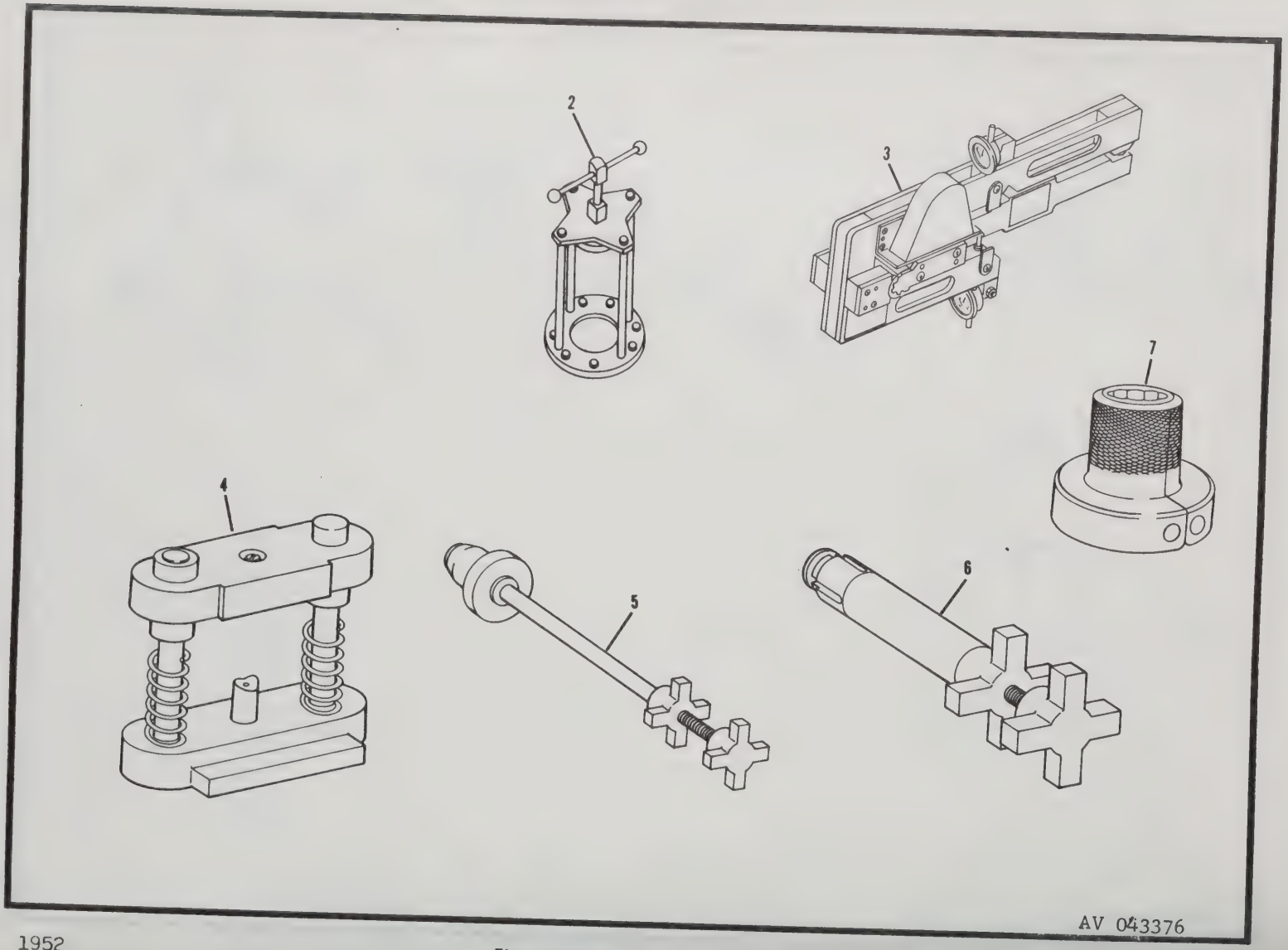

1952

Figure A45. Airframe Tools

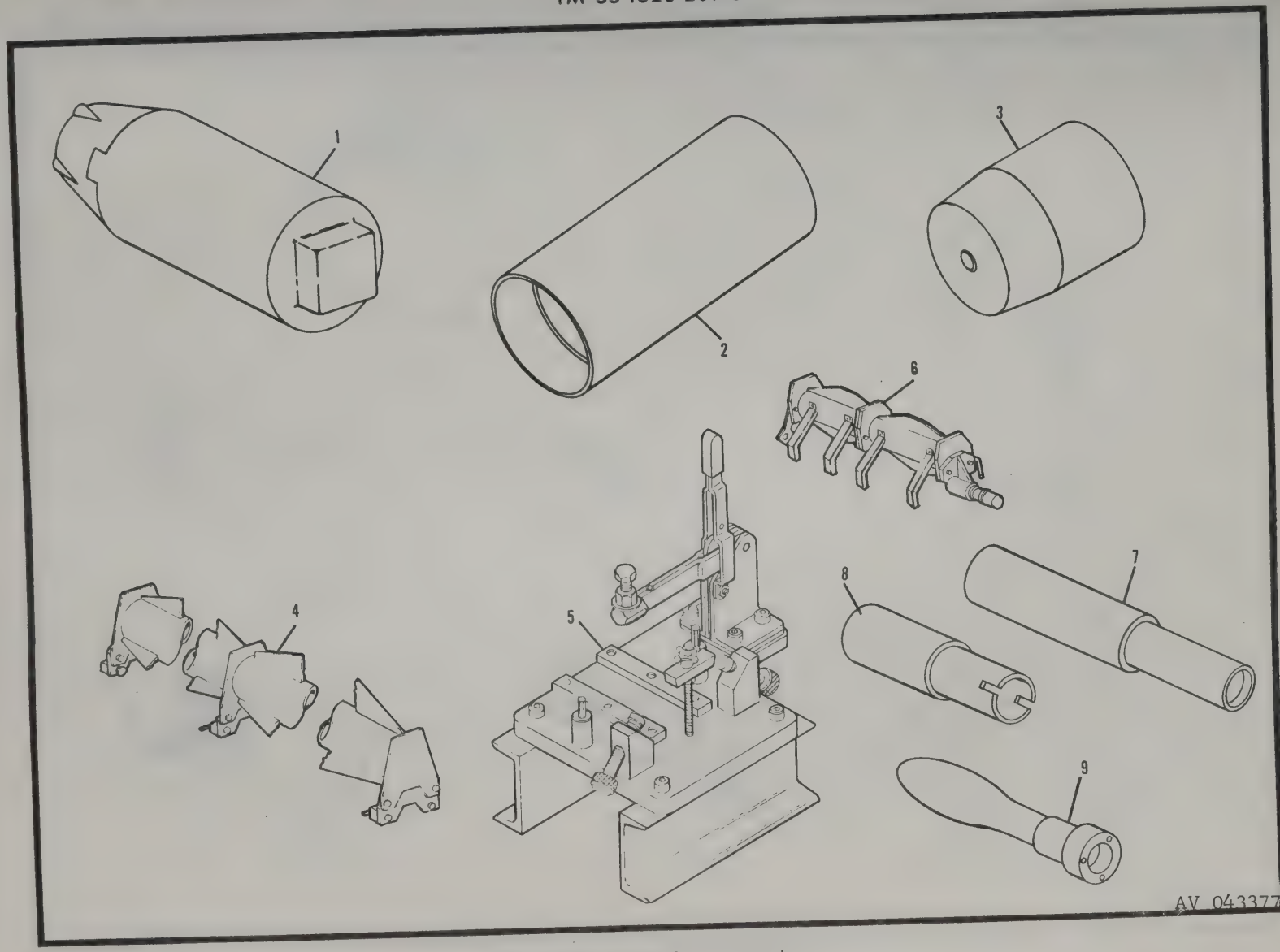

Figure A46. Airframe Tools

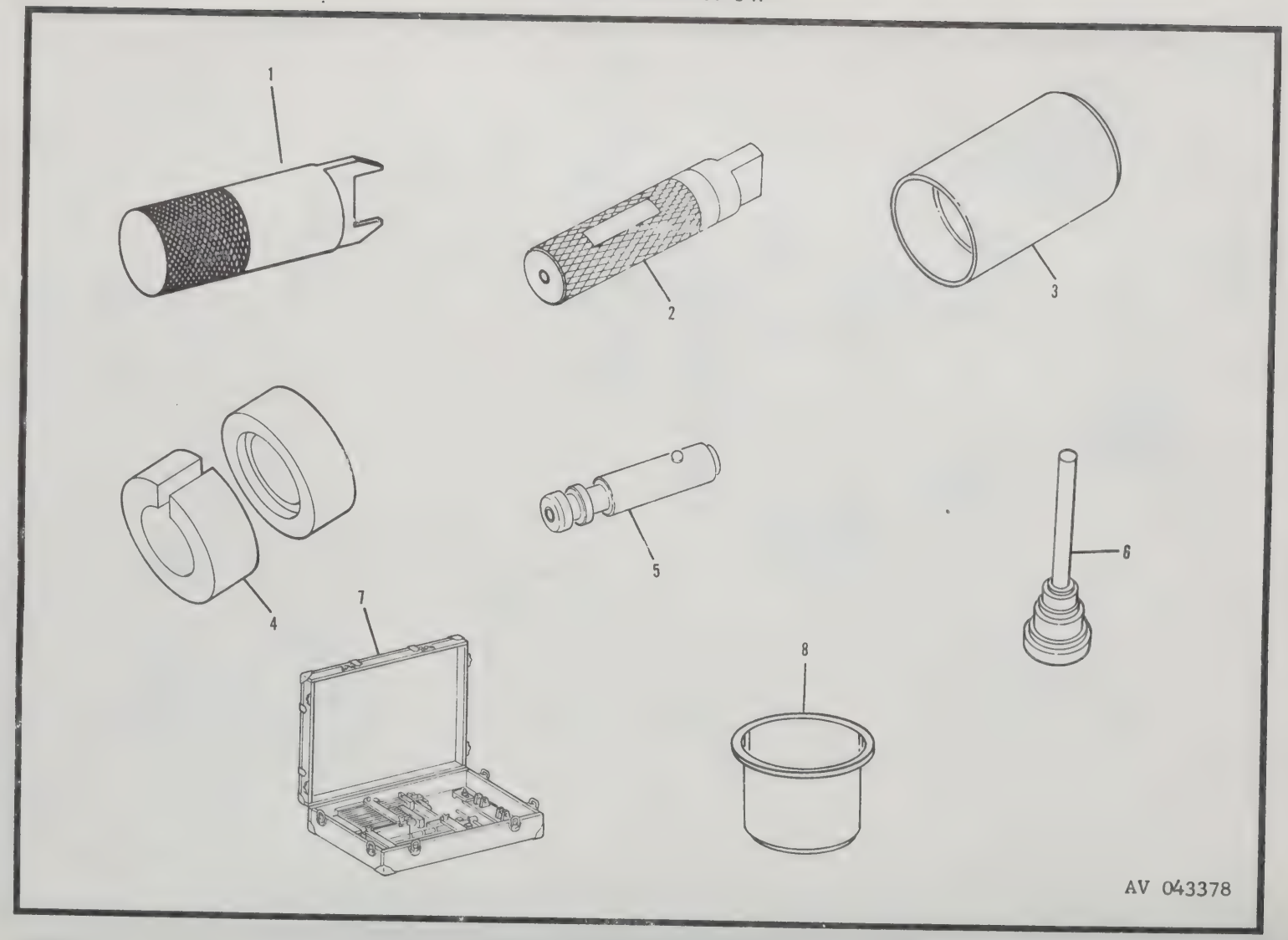

1954

Figure A47. Airframe Tools

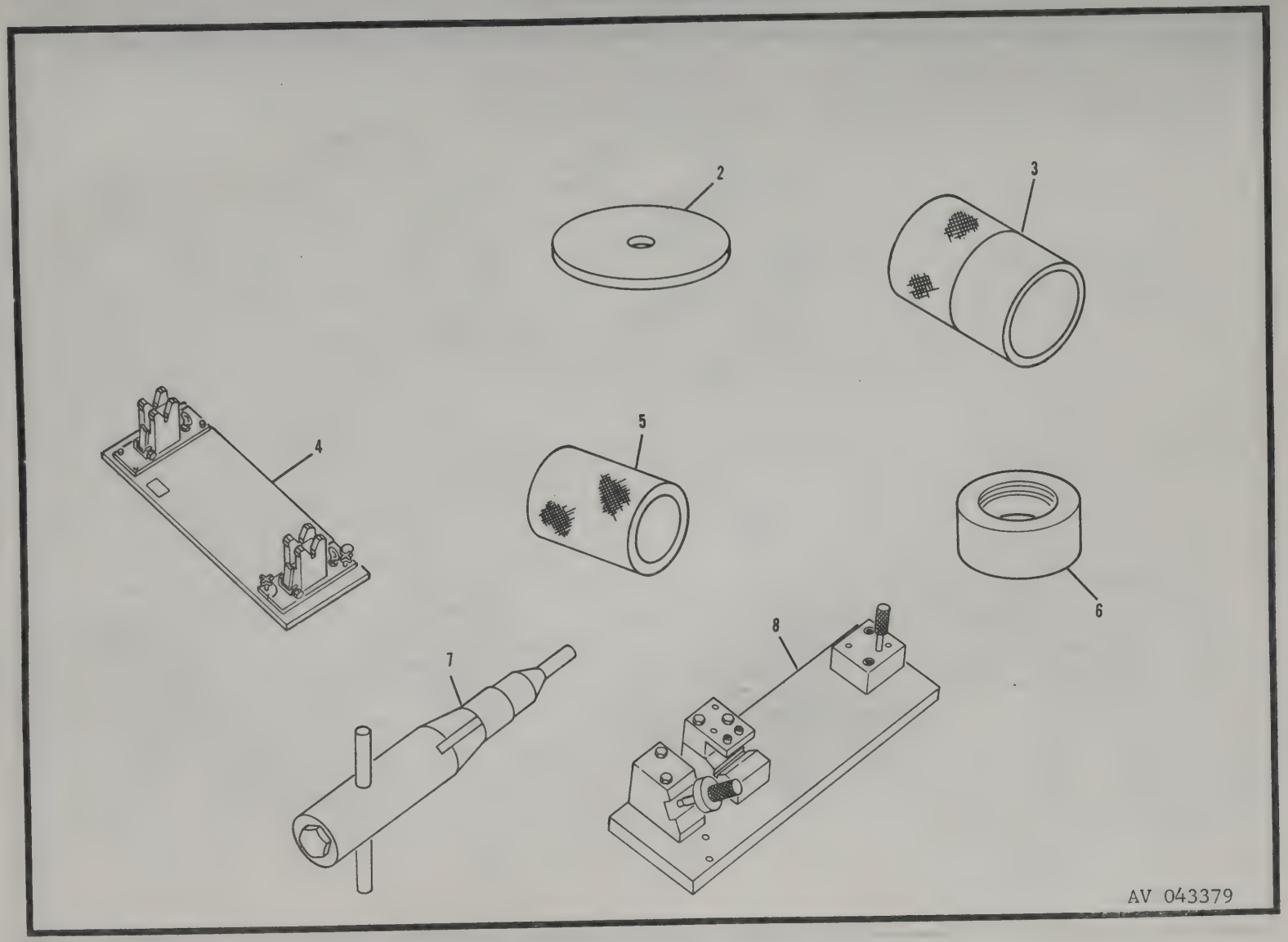

Figure A48. Airframe Tools

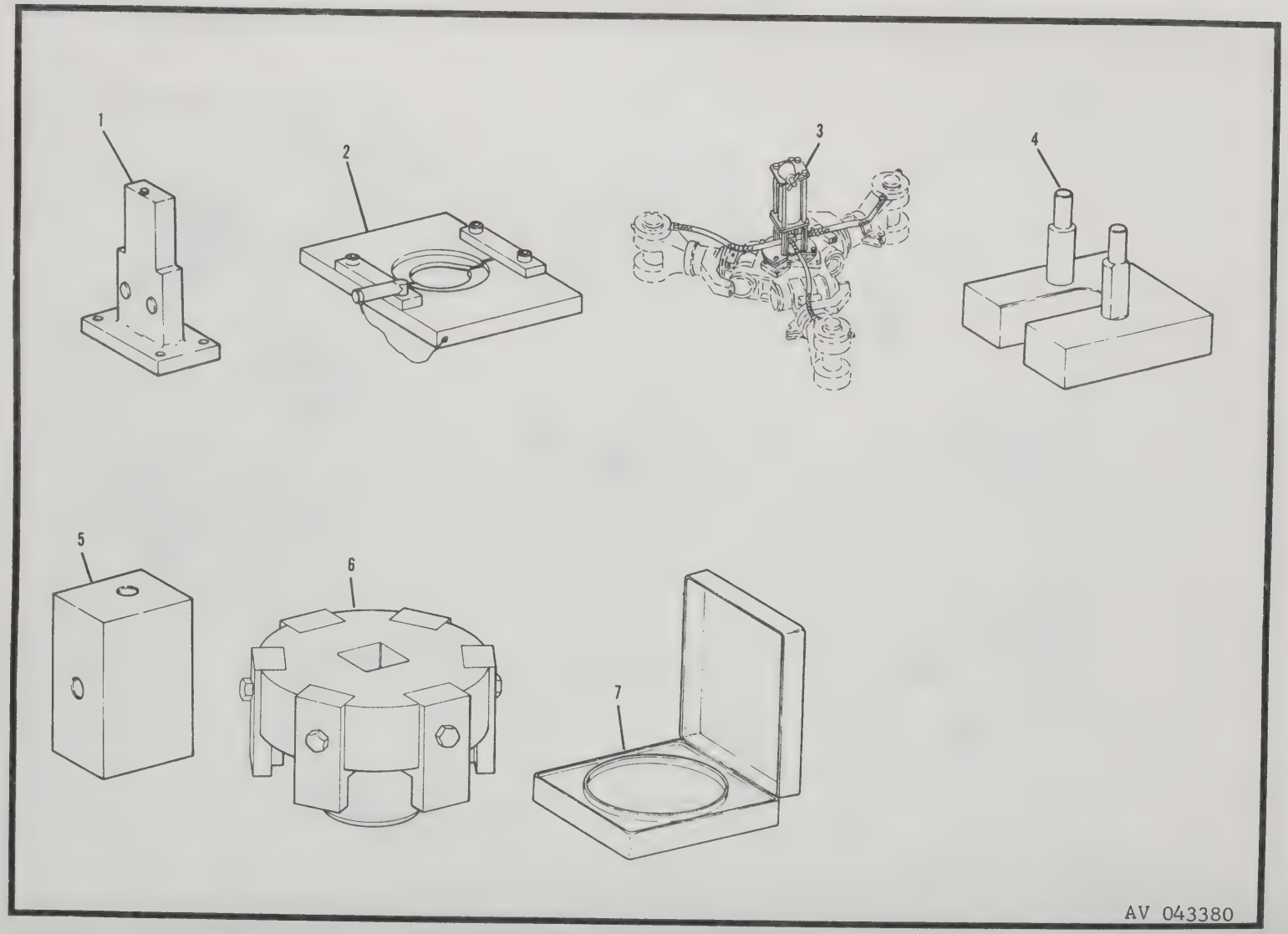

1956

Figure A49. Airframe Tools

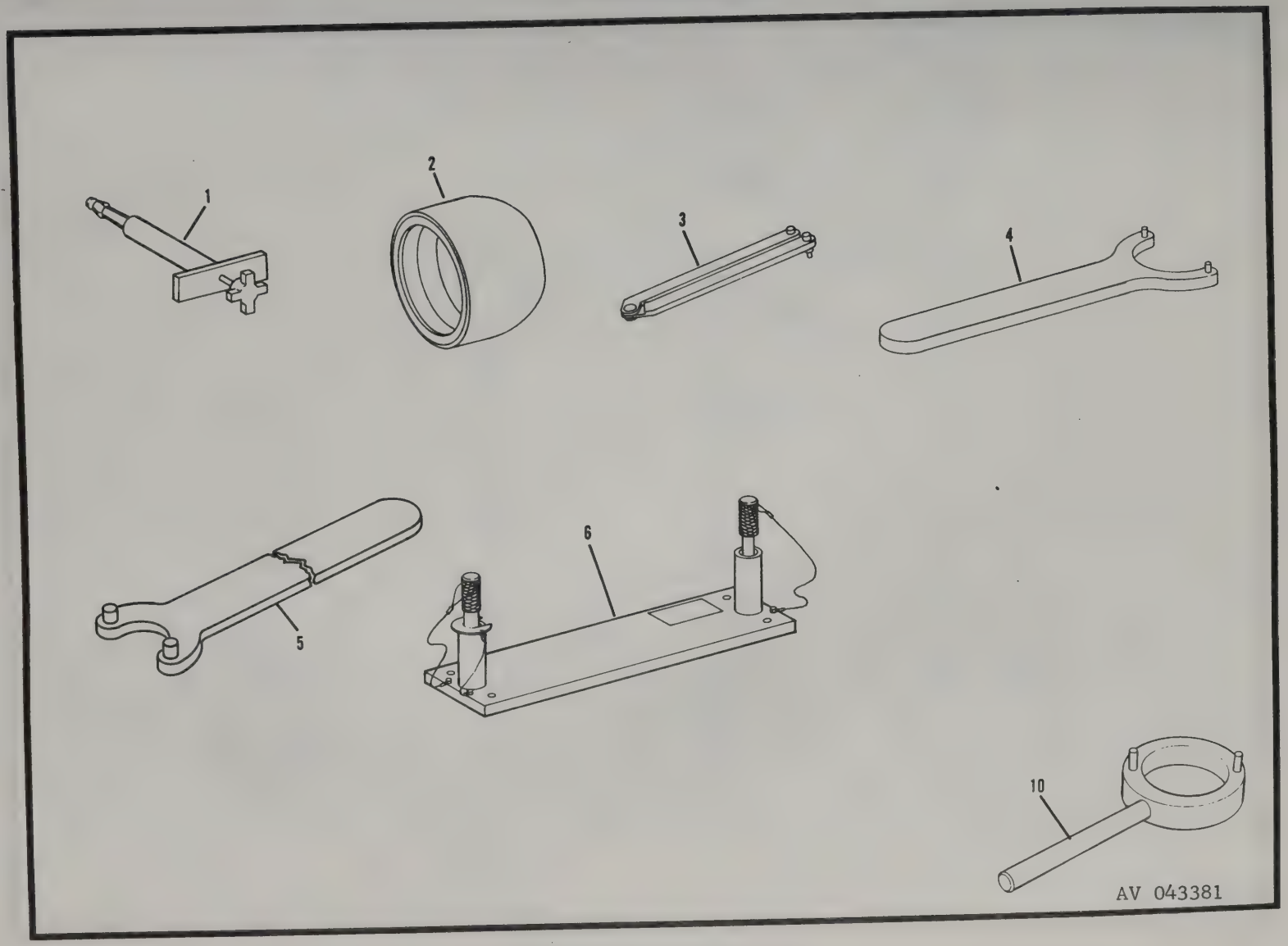

Figure A50. Airframe Tools

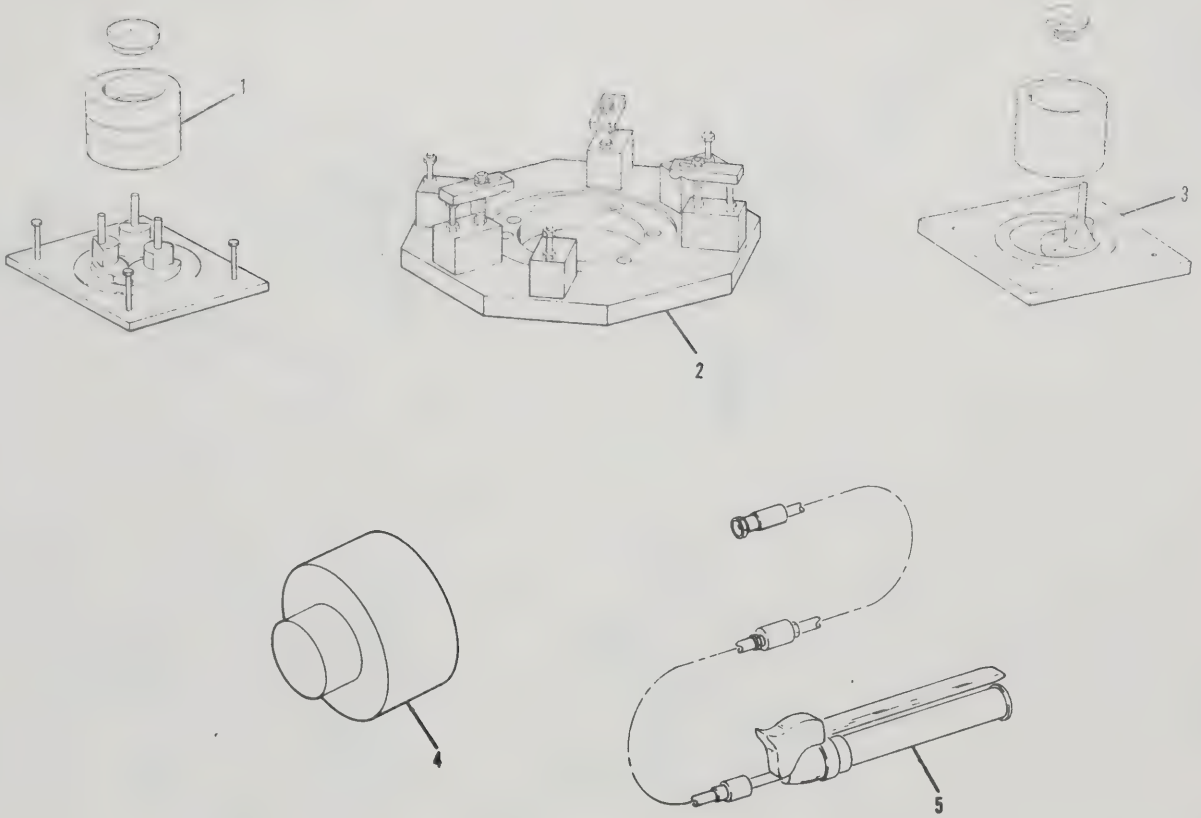

1958

Figure A51. Airframe Tools

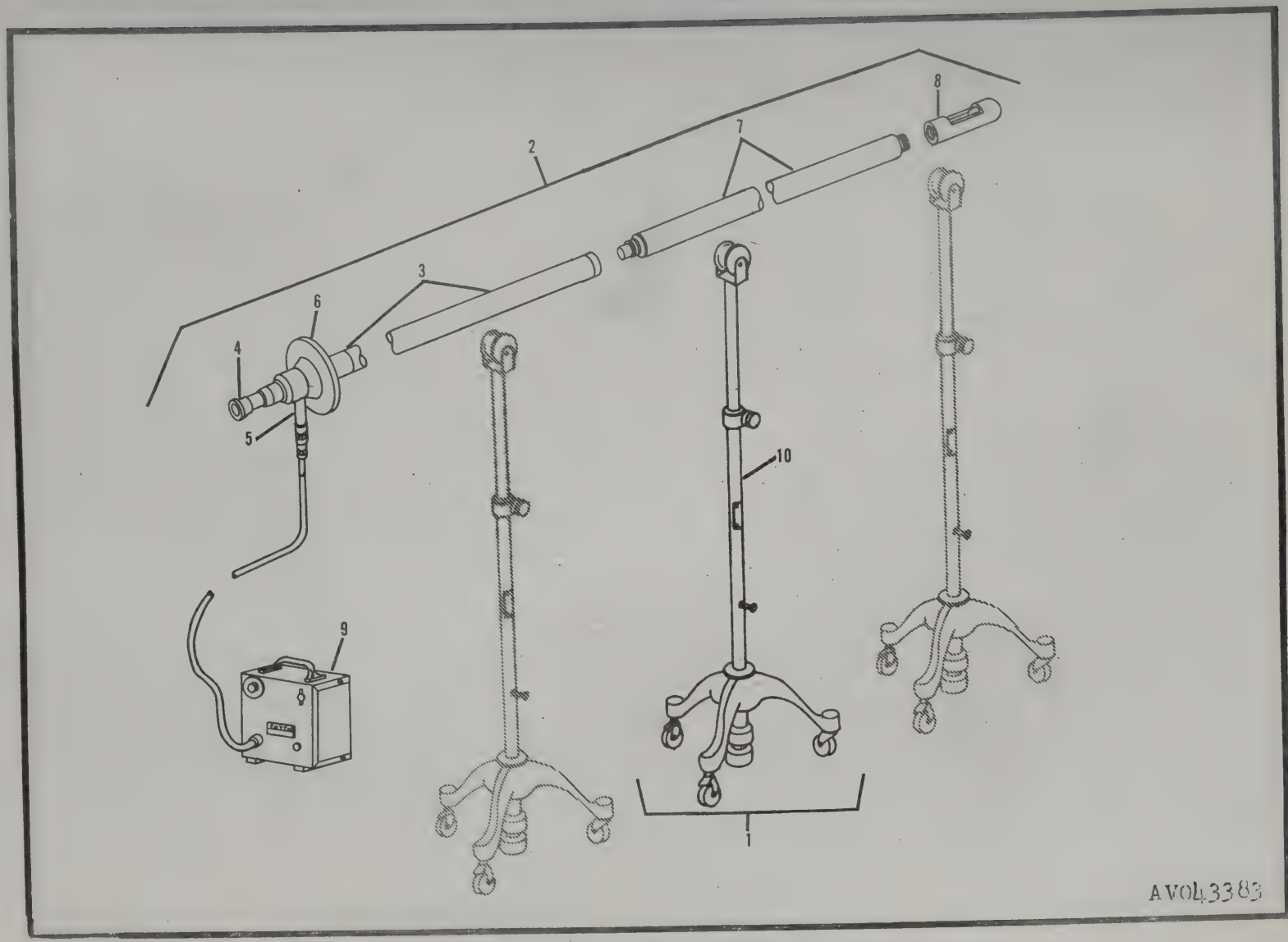

Figure A52. Airframe Tools

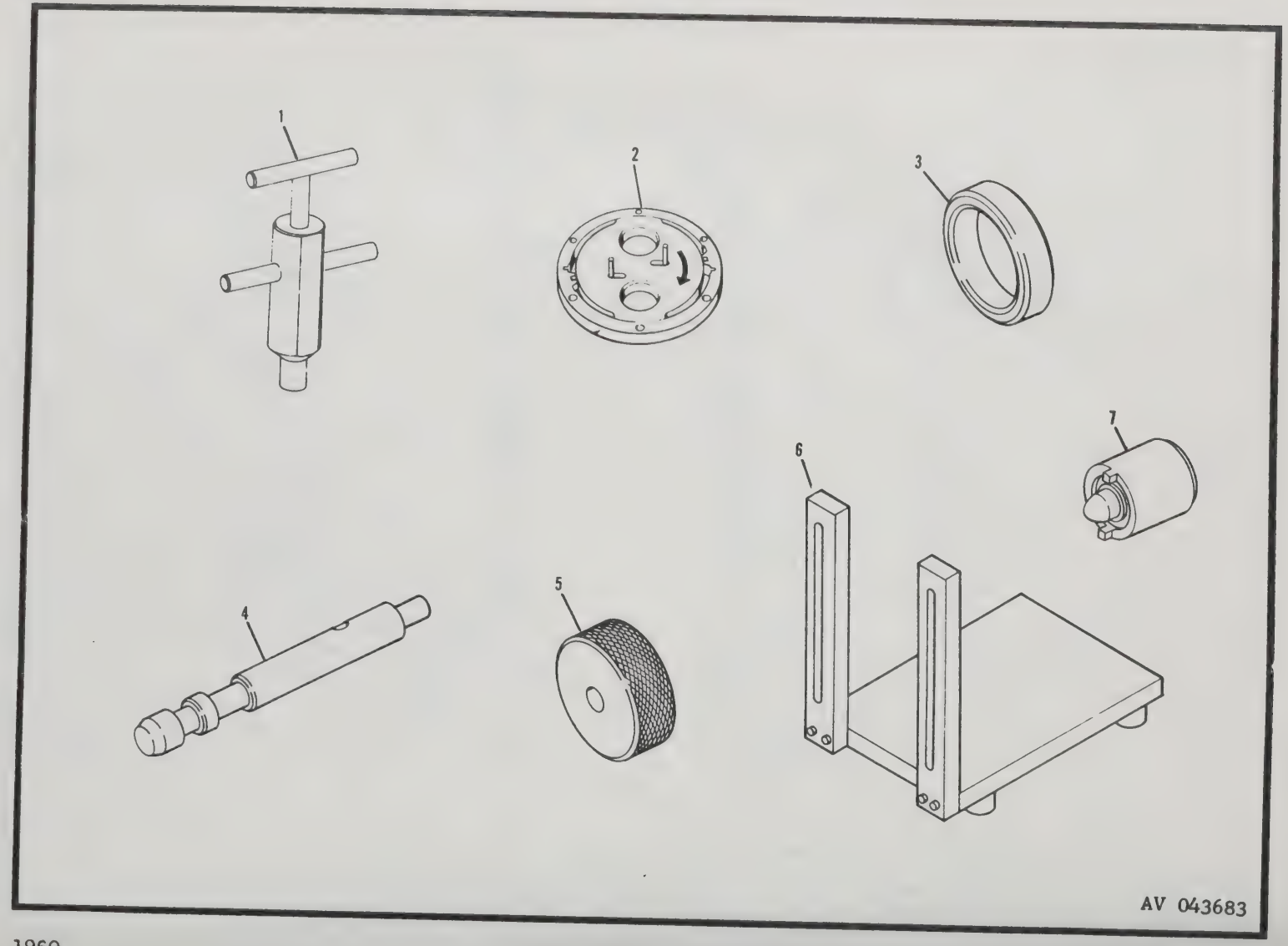

1960

Figure A53. Airframe Tools

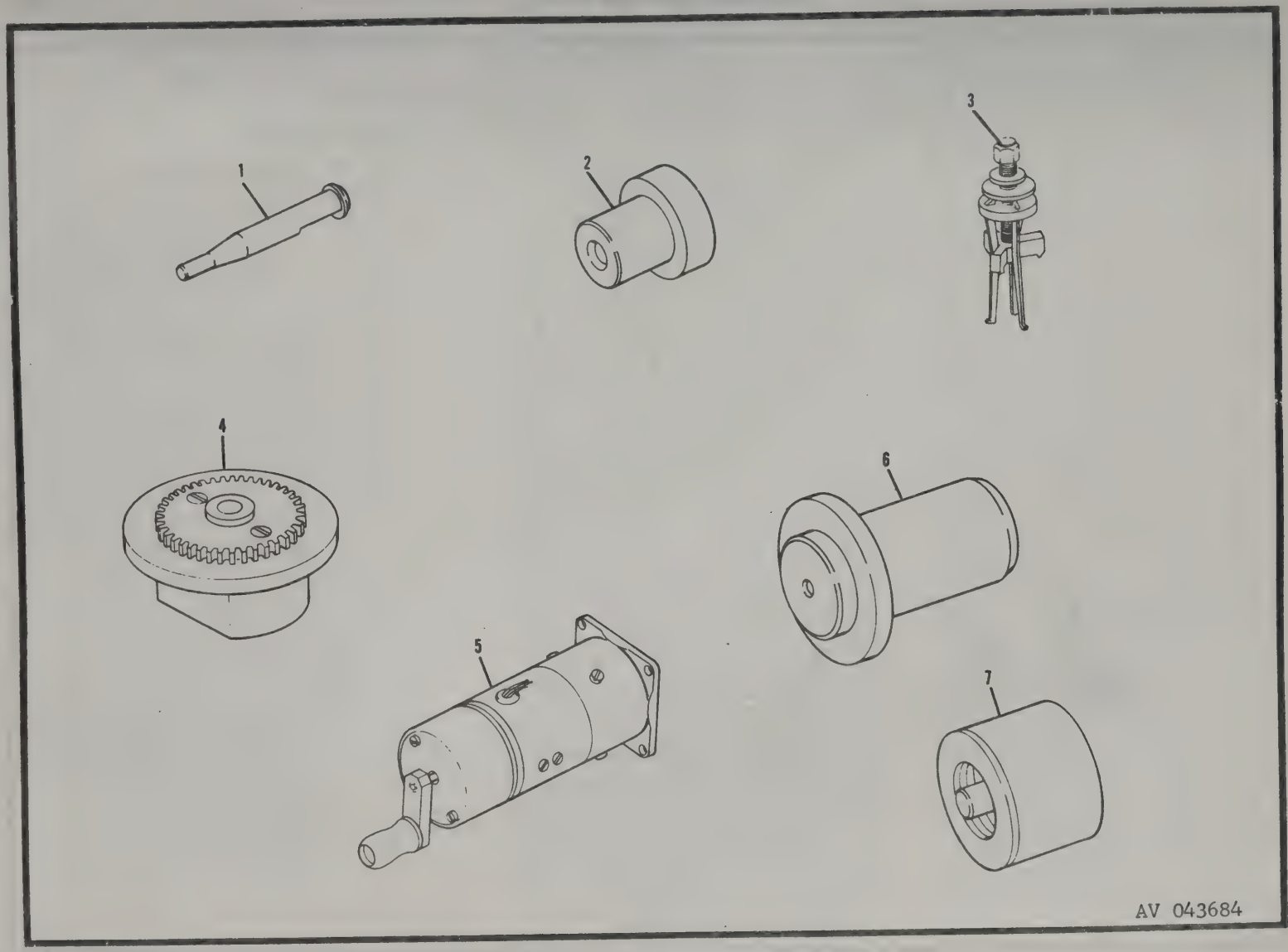

Figure A54. Airframe Tools

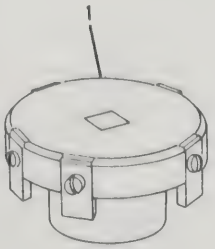

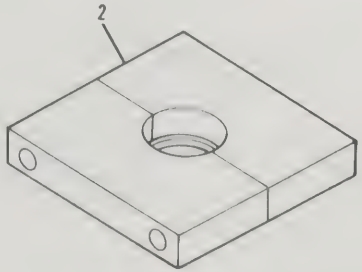

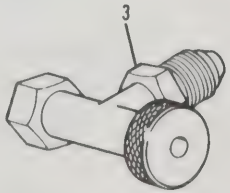

AV043685

1962

Figure A55. Airframe Tools

	(1) SMR CODE	(2) FEDERAL STOCK NUMBER	(3) DESCRIPTION REFERENCE NUMBER & MFR CODE			USABLE ON CODE CH-47	(4) UNIT OF MEAS	(5) QTY INC IN UNIT	(6) 30-DAY DS/GS MAINT ALW (a) 1-20	(b) 21-50	(c) 51-100	(7) 1YR ALWPER 100 EQUIP CNTGCY	(8) DEPOT MAINT ALWPER 100 EQUIP	(9) ILLUSTRATION (a) FIG NO	(b) ITEM NO
			FUNCTIONAL GROUP - 40	GROUND	SUPPORT AND FLYAWAY ITEMS										
C	------Z	5120-907-0876	5180CH47-000-1	81996	WRENCH SET,HYDRAULIC FOR** INITAL DISTRIBUTION ONLY, REQUISITION INDIVIDUAL COMPONENTS TO REPLENISH WRENCH SETUSE UNTIL EXHAUSTED,NO REPLACEMENT	ABC	EA	V						F1	1
C	PB-OZ-Z	5140-331-5496		81348	.TOOL BOX,PORTABLE-19 IN.** LG,7 IN.W,7 IN.H. FED GGG -T-558,TYPE 1, CLASS 1	ABC	EA	V	*	*	*		*	F1	2
	PB-OZ-Z	5120-288-8714	1932	20175	.WRENCH,OPEN END,FIXED** SG HD,1 IN.OPENING	ABC	EA	V	*	*	*		*	F1	3
	PB-OZ-Z	5120-288-6552	1936	20175	.WRENCH,OPEN END,FIXED-SG** HD,1-1/8 IN.OPENING	ABC	EA	V	*	*	*		*	F1	4
	PB-OZ-Z	5120-288-8711	1940	20175	.WRENCH,OPEN END,FIXED-SG** HD,1-1/4 IN.OPENING	ABC	EA	V	*	*	*		*	F1	5
	PB-OZ-Z	5120-288-8708	1944	20175	.WRENCH,OPEN END,FIXED-SG** HD,1-3/8 IN.OPENING	ABC	EA	V	*	*	*		*	F1	6
	PB-OZ-Z	5120-288-8706	1948	20175	.WRENCH,OPEN END,FIXED-SG** HD,1-1/2 IN.OPENING	ABC	EA	V	*	*	*		*	F1	7
	PB-OZ-Z	5120-288-8704	1952	20175	.WRENCH,OPEN END,FIXED-SG** HD,1-5/8 IN.OPENING	ABC	EA	V	*	*	*		*	F1	8
	PB-OZ-Z	5120-288-8703	1958	20175	.WRENCH,OPEN END,FIXED-SG** HD,1-13/16 IN.OPENING	ABC	EA	V	*	*	*		*	F1	9
	PB-OZ-Z	5120-879-2339	1962	20175	.WRENCH,OPEN END,FIXED-SG** HD,1-15/16 IN.OPENING	ABC	EA	V	*	*	*		*	F1	10
	PB-OZ-Z	5120-288-8713	1964	20175	.WRENCH,OPEN END,FIXED-SG** HD,30 DEG,2 IN.OPENING	ABC	EA	V	*	*	*		*	F1	11
	PB-OZ-Z	5120-288-8701	1968	20175	.WRENCH,OPEN END,FIXED-SG** HD,30 DEG,2-1/8 IN.OPENING	ABC	EA	V	*	*	*		*	F1	12
	PB-OZ-Z	5120-288-8698	1970	20175	.WRENCH,OPEN END,FIXED-SG** HD,30 DEG,2-3/16 IN. OPENING	ABC	EA	V	*	*	*		*	F1	13
	PB-OZ-Z	5120-288-8699	1972	20175	.WRENCH,OPEN END,FIXED-SG** HD,30 DEG,2-1/4 IN.OPENING	ABC	EA	V	*	*	*		*	F1	14
	PB-OZ-Z	5120-203-4796	1226	20175	.WRENCH,OPEN END,FIXED-SG** HD,30 DEG,13/16 IN.OPENING	ABC	EA	V	*	*	*		*	F1	15
	PB-OZ-Z	5120-203-4814	1228	03914	.WRENCH,OPEN END,FIXED-DB** HD,30 DEG,7/8 IN.OPENING	ABC	EA	V	*	*	*		*	F1	16
	PB-OZ-Z	5120-203-4812	1232	03914	.WRENCH,OPEN END,FIXED-DB** 30 DEG,1 IN.OPENING	ABC	EA	V	*	*	*		*	F1	17
	PB-OZ-Z	5120-203-4808	1240	73038	.WRENCH,OPEN END,FIXED-SG** HD,30 DEG,1-1/4 IN.OPENING	ABC	EA	V	*	*	*		*	F1	18
	PB-OZ-Z	5120-203-4806	1244	73038	.WRENCH,OPEN END,FIXED-SG** HD,30 DEG,1-3/8 IN.OPENING	ABC	EA	V	*	*	*		*	F1	19
	PB-OZ-Z	5120-203-4804	1248	03914	.WRENCH,OPEN END,FIXED-SG** HD,30 DEG,1-1/2 IN.OPENING	ABC	EA	V	*	*	*		*	F1	20
	PB-OZ-Z	5120-203-4802	1252	73038	.WRENCH,OPEN END,FIXED-SG** HD,30 DEG,1-5/8 IN.OPENING	ABC	EA	V	*	*	*		*	F1	21
	PB-OZ-Z	5120-203-4800	1258	03914	.WRENCH,OPEN END,FIXED-SG**	ABC	EA	V	*	*	*		*	F1	22

(1) SMR CODE	(2) FEDERAL STOCK NUMBER	(3) DESCRIPTION REFERENCE NUMBER & MFR CODE			USABLE ON CODE	(4) UNIT OF MEAS.	(5) QTY INC IN UNIT	(6) 30-DAY DS/GS MAINT ALW (a) 1-20	(b) 21-50	(c) 51-100	(7) EXP ALWPER OF EQUIP OUTSIDE	(8) DEPOT MAINT ALWPER OF EQUIP	(9) ILLUSTRATION (a) FIG NO	(b) ITEM NO
		FUNCTIONAL GROUP - 40	GROUND	SUPPORT AND FLYAWAY ITEMS	CH-47									
				CONTINUED HD,30 DEG,1-13/16 IN. OPENING									F1	22
PB-OZ-Z	5120-203-4798	1262	20175	.WRENCH,OPEN END,FIXED-SG**.. HD,30 DEG,1-15/16 IN. OPENING	ABC	EA	V	*	*	*		*	F1	23
PB-OZ-Z	5120-203-4797	1264	03914	.WRENCH,OPEN END,FIXED-SG**.. HD,30 DEG,2 IN.OPENING	ABC	EA	V	*	*	*		*	F1	24
PB-OZ-Z	5120-203-4795	1268	03914	.WRENCH,OPEN END,FIXED-SG**.. HD,30 DEG,2-1/8 IN.OPENING	ABC	EA	V	*	*	*		*	F1	25
PB-OZ-Z	5120-935-4620	1270	03914	.WRENCH,OPEN END,FIXED-SG**.. HD,30 DEG,2-3/16 IN. OPENING	ABC	EA	V	*	*	*		*	F1	26
PB-OZ-Z	5120-203-4794	1272	73038	.WRENCH,OPEN END,FIXED-SG**.. HD,2-1/4 IN.OPENING	ABC	EA	V	*	*	*		*	F1	27
PB-OZ-Z	5120-947-3189	VS5216	55719	.WRENCH,OPEN END,FIXED-DB**.. HD,1/2 IN.OPENING	ABC	EA	V	*	*	*		*	F1	28
PB-OZ-Z	5120-947-3155	VS5218	55719	.WRENCH,OPEN END,FIXED-DB**.. HD,9/16 IN.OPENING	ABC	EA	V	*	*	*		*	F1	29
PB-OZ-Z	5120-947-3163	VS5220	55719	.WRENCH,OPEN END,FIXED-DB**.. HD,30 DEG/60 DEG,5/8 IN. OPENING	ABC	EA	V	*	*	*		*	F1	30
PB-OZ-Z	5120-293-1796	VS5222	55719	.WRENCH,OPEN END,FIXED-DB**.. HD,30 DEG/60 DEG,11/16 IN. OPENING	ABC	EA	V	*	*	*		*	F1	31
PB-OZ-Z	5120-935-4618	VS5226	55719	.WRENCH,OPEN END,FIXED-DB**.. HD,30 DEG/60 DEG,13/16 IN. OPENING	ABC	EA	V	*	*	*		*	F1	32
PB-OZ-Z	5120-935-4619	VS5228	55719	.WRENCH,OPEN END,FIXED-DB**.. HD,30 DEG/60 DEG,7/8 IN. OPENING	ABC	EA	V	*	*	*		*	F1	33
PB-OZ-Z	5120-293-1010	AC64	20175	.CROWFOOT ATTACHMENT-OPEN**.. END,2 IN.	ABC	EA	V	*	*	*		*	F1	34
PB-OZ-Z	5120-293-2562	AC68	20175	.CROWFOOT ATTACHMENT-OPEN**.. END,2-1/8 IN.	ABC	EA	V	*	*	*		*	F1	35
C PB-OZ-Z	5120-227-8074		81348	.EXTENSION,SOCKET WRENCH**... SQ END,1/2 IN.10 IN.LG, FED GGG-W-641,TYPE 4,CLASS 4,STYLE A	ABC	EA	V	*	*	*		*	F1	36
PB-OZ-Z	5120-236-7590		81348	.HANDLE,SOCKET WRENCH**..... SQ END,1/2 IN.14-1/2 IN. MIN,19 IN.MAX O/A LG FED GGG-W-641,TYPE 3,CLASS 1	ABC	EA	V	*	*	*		*	F1	37
PA-OZ-Z	1730-089-7806	AA1730-1301	81996	TIE DOWN KIT,AIRCRAFT**..... MOORING	ABC	EA	1	*	*	*		*	F2	1
PB-OZ-Z	1730-317-2985	AA1730-1301-1	81996	.CASE ASSEMBLY,AIRCRAFT**....	ABC	EA	V	*	*	*		*	F2	2

(1) SMR CODE	(2) FEDERAL STOCK NUMBER	(3) DESCRIPTION REFERENCE NUMBER & MFR CODE			USABLE ON CODE CH-47	(4) UNIT OF MEAS	(5) QTY INC IN UNIT	(6) 30-DAY DS/GS MAINT ALW (a) 1-20	(b) 21-50	(c) 51-100	(7) 1 YR ALWPER 100 EQUIP ONTOCY	(8) DEPOT MAINT ALWPER 100 EQUIP	(9) ILLUSTRATION (a) FIG NO	(b) ITEM NO
		FUNCTIONAL GROUP - 40	GROUND	SUPPORT AND FLYAWAY ITEMS										
				CONTINUED									F2	2
				MOORING										
PA-OZ-Z	1730-312-7915	AA1730-1301-6	81996	.SPOILER ASSEMBLY,AIRCRAFT**	ABC	EA	V	*	*	*		*	F2	3
				MOORING										
PA-OZ-Z	1730-578-9677	AA1730-1301-9	81996	.EYE ASSEMBLY,AIRCRAFT**	ABC	EA	V	*	*	*		*	F2	4
				MOORING										
PA-OZ-Z	4030-310-5913	AA1730-1301-10	81996	.ANCHOR,GUY**	ABC	EA	V	*	*	*		*	F2	5
PA-OZ-Z	1730-310-5914	AA1730-1301-11	81996	.ROPE ASSEMBLY,AIRCRAFT**	ABC	EA	V	*	*	*		*	F2	6
				MOORING										
PA-OZ-Z	1730-492-3017	AA1730-1301-38	81996	.ROD,AIRCRAFT MOORING**	ABC	EA	V	*	*	*		*	F2	7
PA-OZ-Z	1730-311-7555	AA1730-1301-7	81996	.DRIVING ROD ASSEMBLY**	ABC	EA	V	*	*	*		*	F2	8
				AIRCRAFT MOORING										
PA-OZ-Z	5315-369-2831	AA1730-1301-37	81996	.PIN,GROUND STAKE**	ABC	EA	V	*	*	*		*	F2	9
PA-OZ-Z	1560-122-5373	1560CH47-398-1	81996	SUPPORT,CARGO RAMP**	ABC	EA	1	*	*	1	10	*	F3	1
PA-OZ-Z	1730-878-0352	114G1022-1	77272	COVER,AIRCRAFT GROUND**	ABC	EA	1	*	*	*		*	F3	2
PB-OZ-Z	1730-439-7952	114G1238-21	77272	COVER,AIRCRAFT GROUND**	ABC	EA	V	1	1	1		1	F3	2
PA-OZ-Z	1730-907-7676	114G1024-1	77272	SHIELD,AIRCRAFT GROUND**	ABC	EA	1	*	*	*		*	F3	3
PA-OZ-Z	1730-848-4955	114G1244-2	77272	COVER,AIRCRAFT GROUND**	ABC	EA	1	*	*	*		*	F3	5
				SERVICING										
PA-OZ-Z	1730-848-4960	114G1244-3	77272	COVER,AIRCRAFT GROUND**	ABC	EA	1	*	*	*		*	F3	5
				SERVICING										
PA-OZ-Z	1670-516-8437	MILT26780	81349	NET,CARGO-MILT26780TYPEM2-3**	ABC	EA	V	*	*	*		*	F3	
PA-OZ-Z	1670-545-9062	SP4038	96603	TIE DOWN,CARGO,AIRCRAFT**	ABC	EA	V	*	*	*		*	F3	6
				STEEL CHAIN,108 IN.LG,29/32 IN.OD,14,000 LB MIN BREAKING STRENGTH										
PA-OZ-Z	1730-785-2055	114G1025-1	77272	SHIELD,AIRCRAFT GROUND**	ABC	EA	1	*	*	*		*	F4	1
PA-OZ-Z	1730-839-7063	114G1023-16	77272	COVER,AIRCRAFT GROUND**	ABC	EA	2	*	*	*		*	F4	2
PA-OZ-Z	1670-725-1437	SP4067	96603	TIE DOWN,CARGO,AIRCRAFT**	AB	EA	1	*	*	*		*	F4	3
				NYLON,STEEL OR ALUMINUM FITTINGS,20 FT LG,1-23/32 IN.W,										
PA-OZ-Z	1730-191-9373	114G1323-1	77272	COVER,AIRCRAFT**	C	EA	2	*	*	*		*	F4	4
PA-OZ-Z	1730-435-7802	114E5040-33	77272	COVER,AIRCRAFT**	C	EA	1	*	*	*		*	F4	5
PA-OZ-Z	7510-889-3494		81349	BINDER,LOOSE-LEAF-3 RING**	ABC	EA	1	*	*	*		*	F4	
				FASTENERS,MIL-B-43064										
PA-OZ-Z	1730-758-4987	A02E5828-5	77272	SHIELD,AIRCRAFT,GROUND**	ABC	EA	1	*	*	*		*	F5	2
PA-OZ-Z	1730-977-7479	114E5040-3	77272	COVER ASSEMBLY,PITOT TUBE**	ABC	EA	1	*	*	*		*	F5	3

	(1) SMR CODE	(2) FEDERAL STOCK NUMBER	(3) REFERENCE NUMBER & MFR CODE	DESCRIPTION	USABLE ON CODE	(4) UNIT OF MEAS	(5) QTY INC IN UNIT	(6) 30-DAY DS/GS MAINT ALW (a) 1-20	(b) 21-50	(c) 51-100	(7) 1-YR ALWPER 100 EQUIP CNTGCY	(8) DEPOT MAINT ALWPER 100 EQUIP	(9) ILLUSTRATION (a) FIG NO	(b) ITEM NO
			FUNCTIONAL GROUP - 40	GROUND SUPPORT AND FLYAWAY ITEMS	CH-47									
	PA-OZ-Z	1730-976-9328	114E5042-1	77272 COVER,AIRCRAFT GROUND**.....	ABC	EA	2	*	*	*		*	F5	4
	PA-OZ-Z	1730-978-2158	114E5061-1	77272 COVER ASSEMBLY,OIL COOLER**.. INLET	ABC	EA	1	*	*	*		*	F5	5
	PB-OZ-Z	1560-886-1301	1L97-2	08844 INTERLOCK,TIE DOWN,ROTOR**... BLADE MOORING	ABC	EA	1	*	1	2	29	*	F5	6
	PA-OZ-Z	1730-075-1055	114E5060-1	77272 TIE DOWN,ROTOR BLADE U/W**.. 1560-886-1301	ABC	EA	1	*	*	*		*	F5	7
	PB-OZ-Z	1730-990-9838	114G1206-1	77272 SHIELD,AIRCRAFT GROUND..... SERVICING	ABC	EA	V	*	*	*		*	F5	8
				FIGURES F6 THRU F9 NOT USED.										
	PB-FZ-Z	1730-863-5785	114E5840-1	77272 ADAPTER ASSEMBLY,ROTOR HUB...	ABC	EA	V	1	1	1		1	F10	1
C	PB-FL-L	1730-960-4004	114E5124-1	77272 HOISTING UNIT,TRANSMISSION...	ABC	EA	V	1	1	1		1	F10	2
	PB-FZ-Z	1730-073-3294	114E5119-2	77272 .SLING ASSEMBLY.....	ABC	EA	V	*	*	*		*	F10	2A
	XB-FZ-Z		HMX8G	71334 ..BEARING,PLAIN,ROD END.....	ABC	EA	V						F10	
	XA----Z		114E5124-24	77272 .HOIST ASSEMBLY.....	ABC		V						F10	
	PB-FZ-Z	4030-682-2385	114E5124-21	77272 ..HOOK,HOIST KIT.....	ABC	EA	V	*	*	*		*	F10	2B
R	PB-FZ-Z	3950-836-3278	41670	72671 ..WINCH,DRUM,HAND OPERATED...	ABC	EA	V	*	*	*		*	F10	2C
	PB-FZ-Z	4010-071-0878	40306B	72671 ..WIRE ROPE ASSEMBLY,SINGLE.. LEG,4200 LB SAFE LOAD	ABC	EA	V	*	*	*		*	F10	2D
	XB-DZ-Z		114G1092-1	77272 TABLE,WORK.....	ABC	EA	V						F10	2E
C	------Z	4920-929-1016	114G1038-31	77272 TEST SET HYDRAULIC REWKTO... 114G1038-71 USING KIT 114GK028-1	ABC	EA							F10	3
	PB-OZ-Z	4920-439-8488	114GK028-1	77272 MODIFICATION KIT.....	ABC	EA	V	*	*	*		*	F10	5
	PB-FZ-Z	4920-176-8480	114G1038-71	77272 TEST SET HYDRAULIC.....	ABC	EA	V	*	*	*		*	F10	
C	------Z	1560-863-5787	114E5872-1	77272 ADAPTER ASSEMBLY,POWER PLANT. REWKTO 114E5872-35 USING KIT 114GK004-1	ABC	EA							F10	5
	PB-FZ-Z	4920-917-7099	114GK004-1	77272 MODIFICATION KIT,ADAPTER.....	ABC	EA	V	*	*	*		*	F10	6
	PB-FZ-Z	4920-917-1880	114E5872-35	77272 ADAPTER ASSEMBLY,POWER PLANT.	ABC	EA	V	1	1	1		1	F10	6
	PB-DZ-Z	4920-073-0352	114E5850-20	77272 WORK STAND ASSEMBLY.....	ABC	EA	V					*	F11	1
	PB-DZ-Z	4920-903-4598	114E5853-11	77272 STAND,WORK.....	ABC	EA	V					*	F11	2
C	------Z	1730-879-3062	114E5852-9	77272 SLING,AIRCRAFT MAINTENANCE... REWKTO 114E5852-16 USING KIT 114GK010-3	AB	EA							F11	3
	PB-FZ-Z	1730-462-8872	114GK010-3	77272 CONVERSION KIT,ROTOR WING.... HEAD CONTROL ASSEMBLY	ABC	EA	V	*	*	*		*	F11	
	PB-FZ-Z	1730-179-1326	114E5852-16	77272 SLING,AIRCRAFT MAINTENANCE...	ABC	EA	V	1	1	1		1	F11	3
	PB-FZ-Z	1730-756-9186	114E5903-1	77272 SLING,AIRCRAFT MAINTENANCE...	ABC	EA	V	1	1	1		1	F11	4
	PB-DZ-Z	4920-070-6746	114E5906-54	77272 WORK STAND ASSEMBLY.....	ABC	EA	V					1	F11	5
	PB-FZ-Z	1730-948-3222	114E5902-9	77272 EYE ASSEMBLY,HOISTING..... USBL EFF 66-19098 THRU 67-18463 FOR A MODEL	AB	EA	V	1	1	1		1	F11	6
	PB-FZ-Z	1730-010-7862	114E5902-11	77272 EYE HOISTING ASSEMBLY,ROTOR..	ABC	EA	V	1	1	1		1	F11	6

	(1) SMR CODE	(2) FEDERAL STOCK NUMBER	(3) REFERENCE NUMBER & MFR CODE		DESCRIPTION	USABLE ON CODE CH-47	(4) UNIT OF MEAS	(5) QTY INC IN UNIT	(6) 30-DAY DS/GS MAINT ALW (a) 1-20	(b) 21-50	(c) 51-100	(7) 1-YR ALWPER 100 EQUIP CNTGCY	(8) DEPOT MAINT ALWPER 100 EQUIP	(9) ILLUSTRATION (a) FIG NO	(b) ITEM NO
		FUNCTIONAL GROUP - 40		GROUND	SUPPORT AND FLYAWAY ITEMS										
					CONTINUED									F11	6
					SHAFT USBL EFF 67-18464 THRU 67-18493 FOR B MODEL & 67-18494 & SUBSEQUENT FOR C MODEL										
	PB-FZ-Z	1730-010-7855	114E5902-12	77272	PLUG,HOISTING EYE U/O..... 1730-948-3222	AB	EA	V	*	*	*		*	F11	
	PB-FZ-Z	1730-010-7854	114E5902-13	77272	COVER,HOISTING EYE U/O..... 1730-948-3222	AB	EA	V	*	*	*		*	F11	
	PB-FZ-Z	4920-821-2767	114E5909-4	77272	RING,HOISTING,FORWARD..... TRANSMISSION AND PYLON SHAFT USBL EFF 67-18463 & PRIOR	AB	EA	V	1	1	1		1	F11	7
C	PB-DD-D	4920-463-4788	114G1347-1	77272	TEST SET,VIBRATION.....	C	EA	V					1	F11	9
C	------Z	1730-866-6948	114E5911-65	77272	SLING,AIRCRAFT MAINTENANCE... REWKTO 114E5911-89 USING KIT 114GK065-1	ABC	EA							F12	1
	PB-FZ-Z	1730-181-4138	114GK065-1	77272	MODIFICATION KIT.....	ABC	EA	V	*	*	*		*	F12	
	PB-FZ-Z	1730-181-4136	114E5911-89	77272	SLING ASSEMBLY,BLADE.....	ABC	EA	V	*	*	*		*	F12	1
	PB-FZ-Z	1730-226-3069	114E5924-2	77272	SLING,AIRCRAFT MAINTENANCE...	ABC	EA	V	1	1	1		1	F12	2
	PB-DZ-Z	4920-903-4605	114E5950-33	77272	STAND,WORK.....	ABC	EA	V					1	F12	3
	PB-FZ-Z	1730-071-1690	114G1013-1	77272	SLING,AIRCRAFT MAINTENANCE...	ABC	EA	V	1	1	1		1	F12	4
	XA----Z		3105206	99879	.STRAP,SLING ASSEMBLY.....	ABC		V						F12	
	XA----Z		33134	99879	.LINK,SLING ASSEMBLY.....	ABC		V						F12	
	XA----Z		3910068A220	99879	.LEG ASSEMBLY,SLING.....	ABC		V						F12	
	XA----Z		3910068A195	99879	.LEG ASSEMBLY,SLING.....	ABC		V						F12	
	XA----Z		34044-12	99879	.PLATE,SIDE,END FITTING.....	ABC		V						F12	
	XA----Z		33133	99879	..FITTING,END.....	ABC		V						F12	
C	PB-FF-F	4920-086-6900	102915	01413	STAND ASSEMBLY,AIR LOG..... MAINTENANCE	ABC	EA	V	1	1	1		1	F12	5
	PB-DZ-Z	4920-924-7730	114G1103-1	77272	STAND,MAINTENANCE.....	ABC	EA	V					*	F12	6
C	PB-DB-D	4920-925-4821	114G1105-1	77272	STAND,TRANSMISSION.....	ABC	EA	V					*	F13	2
	PB-DZ-Z	4920-867-1160	114E5963-1	77272	WORK STAND,ROTARY WING HEAD..	ABC	EA	V					1	F13	3
C	PB-DB-Z	4920-944-2537	114G1026-30	77272	STAND ASSEMBLY,FORWARD.....	ABC	EA	V					1	F13	4
C	PB-DD-D	4920-027-3041	114GS028-1	77272	TEST STAND,SERVO VALVE.....	ABC	EA	V					*	F13	6
C	PB-FF-Z	1730-760-3367	114E5128-3	77272	HOISTING UNIT.....	ABC	EA	V	1	1	1		1	F14	
	XB-FZ-Z		114E5114-2	77272	.MAST & BOOM,MAINTENANCE.....	ABC	EA	V						F14	1
	XB-FZ-Z		114E5114-3	77272	..PIN,CLEVIS.....	ABC	EA	V						F14	

	(1) SMR CODE	(2) FEDERAL STOCK NUMBER	(3) DESCRIPTION REFERENCE NUMBER & MFR CODE			USABLE ON CODE	(4) UNIT OF MEAS	(5) QTY INC IN UNIT	(6) 30-DAY DS/GS MAINT ALW (a) 1-20	(b) 21-50	(c) 51-100	(7) 1-YR ALWPER 100 EQUIP CNTGCY	(8) DEPOT MAINT ALWPER 100 EQUIP	(9) ILLUSTRATION (a) FIG NO	(b) ITEM NO
			FUNCTIONAL GROUP - 40	GROUND SUPPORT AND FLYAWAY ITEMS		CH-47									
	XB-FZ-Z		114E5114-4	77272	..PIN,CLEVIS.....	ABC	EA	V						F14	
N	XB-FZ-Z		NAS1343A2C74	80205	..PIN,QUICK RELEASE.....	ABC	EA	V						F14	
	XB-FZ-Z		114E5118-1	77272	..BOOM ASSEMBLY SEE FIG. F15 FOR BREAKDOWN	ABC	EA	1						F14	2
	XB-FZ-Z		114E5117-107	77272	..MAST ASSEMBLY SEE FIG. F16 FOR BREAKDOWN	ABC	EA	1						F14	3
	PA-FZ-Z	5315-236-8362	MS24665-376	96906	..PIN,COTTER.....	ABC	EA	1	*	*	*		*	F14	4
	PA-FZ-Z	5310-282-4776	MS20002-14	96906	..WASHER,FLAT.....	ABC	EA	1	*	*	*		*	F14	6
	XB-FZ-Z		114E5119-13	77272	..BOLT,TENSION ROD ASSY.....	ABC	EA	V						F14	7
	PA-FZ-Z	5310-149-9120	MS20002C14	96906	..WASHER,RECESSED.....	ABC	EA	1	*	*	*		*	F14	8
	XB-FZ-Z		114E5119-35	77272	..SPACER,TENSION ROD.....	AB	EA	V						F14	12
	XB-FZ-Z		114E5119-33	77272	..SPACER,TENSION ROD.....	ABC	EA	V						F14	13
	XB-FZ-Z		114E5115-11	77272	.AZIMUTH CONTROL ASSEMBLY.... SEE FIG. F17 FOR BREAKDOWN	ABC	EA	V						F14	14
R	PB-FZ-Z	1730-660-4071	114E5127-1	77272	.SLEEVE ASSEMBLY.....	ABC	EA	V	*	*	*		*	F14	15
	XA----Z		114E5127-3	77272	..GUIDE BAR.....	ABC		2						F14	15A
	PA-FZ-Z	5320-117-6953	MS20426AD4-8	96906	..RIVET,SOLID.....	ABC	LB	6	*	*	*		*	F14	15B
	XB-FZ-Z		A02E5865-27	77272	.CABIN,UPRIGHT ASSEMBLY..... SEE FIG.F18 FOR BREAKDOWN	ABC	EA	1						F14	16
	XB-FZ-Z		A02E5864-15	77272	.BASE PLATE ASSEMBLY SEE.... FIG.F19 FOR BREAKDOWN	ABC	EA	1						F14	17
	XB-FZ-Z		114E5116-23	77272	.JIB BOOM ASSEMBLY SEE FIG.. F20 FOR BREAKDOWN	ABC	EA	1						F14	18
					NOTE 1 MAX 2 WASHERS PER SIDE TO SHIM NOTE 2 MAX 1 WASHER PER SIDE TO SHIM											
	XB-FZ-Z		114E5118-1	77272	BOOM ASSEMBLY.....	ABC	EA	1						F15	1
	XB-FZ-Z		114E5120-1	77272	.TROLLY ASSEMBLY,MAINTENANCE.	ABC	EA	V						F15	2
	PA-FZ-Z	5310-176-8112	AN320-8	88044	..NUT,SLOTTED,HEXAGON.....	ABC	EA	1	*	*	*		*	F15	6
	PA-FZ-Z	5310-167-0839	AN960-816L	88044	..WASHER,FLAT.....	ABC	EA	2	*	*	*		*	F15	7
	PA-FZ-Z	5310-167-0839	AN960-816L	88044	..WASHER,FLAT.....	ABC	EA	2	*	*	*	REF	*	F15	9
C	PA-FZ-Z	3110-278-6895	CF11-4MILG3278	92563	..CAM FOLLOWER,NEEDLE.....	AB	EA	4	*	*	*		*	F15	11
	PB-FZ-Z	4010-071-0876	40308B	72671	..WIRE ROPE ASSY.....	ABC	EA	V	*	*	*		*	F15	12
	PB-FZ-Z	4010-071-0877	40307B	72671	..WIRE ROPE ASSEMBLY.....	ABC	EA	V	*	*	*		*	F15	13
	PB-FZ-Z	3940-909-1332	114E5131-1	77272	...BLOCK,TACKLE.....	ABC	EA	V	*	*	*		*	F15	13A
	XB-FZ-Z		114E5131-2	77272	....STRAP,HOOK,CRANE.....	ABC	EA	V	*	*	*		*	F15	14
	PA-FZ-Z	5310-306-3167	AN960C816L	88044	....WASHER FLAT.....	ABC	EA	V						F15	15
	PA-FZ-Z	3020-517-1327	MS20221A2	96906	....PULLY,GROOVE.....	ABC	EA	2	*	*	*		*	F15	17
	PA-FZ-Z	5315-234-1863	MS24665-300	96906	.PIN,COTTER.....	ABC	EA	1	*	*	*	REF	*	F15	19
	PA-FZ-Z	5310-167-1285	AN310-4	88044	.NUT,CASTELLATED.....	ABC	EA	1	*	*	*		*	F15	20
	PA-FZ-Z	5310-141-1795	AN960-416	88044	.WASHER,FLAT.....	ABC	EA	1	*	*	*		*	F15	21
	PA-FZ-Z	5306-144-3710	AN4-13	88044	.BOLT,MACHINE.....	ABC	EA	2	*	*	*		*	F15	22
	XB-FZ-Z		114E5119-4	77272	.LOCK ASSEMBLY,CABLE.....	ABC	EA	1	*	*	*		*	F15	24
							EA	V						F15	25

	(1) SMR CODE	(2) FEDERAL STOCK NUMBER	(3) DESCRIPTION REFERENCE NUMBER & MFR CODE		USABLE ON CODE	(4) UNIT OF MEAS	(5) QTY INC IN UNIT	(6) 30-DAY DS/GS MAINT ALW (a) 1-20	(b) 21-50	(c) 51-100	(7) 1-YR ALWPER (d) CNTGCY	(8) DEPOT MAINT ALWPER (e)	(9) ILLUSTRATION (a) FIG NO	(b) ITEM NO
					CH-47									
			FUNCTIONAL GROUP - 40	GROUND SUPPORT AND FLYAWAY ITEMS										
	PA-FZ-Z	5315-234-1856	MS24665-155	96906 .PIN,COTTER	ABC	EA	1	*	*	*		*	F15	26
	PA-FZ-Z	5310-167-1289	AN310-8	88044 .NUT,CASTELLATED	ABC	EA	1	*	*	*		*	F15	27
	PA-FZ-Z	5310-184-8976	AN960PD816L	88044 .WASHER,FLAT	ABC	EA	2	*	*	*		*	F15	28
	PA-FZ-Z	3020-517-1327	MS20221A2	96906 .PULLY,GROOVE	ABC	EA	1	*	*	*	REF	*	F15	30
C	PA-FZ-Z	5315-597-1543	NAS427K18	80205 .PIN,SPRING	ABC	EA	1	*	*	*		*	F15	31
C	PA-FZ-Z	5315-597-2415	NAS427K15	80205 .PIN,SPRING	ABC	EA	1	*	*	*		*	F15	32
	PA-FZ-Z	5310-167-0823	AN960-816	88044 .WASHER,FLAT	ABC	EA	1	*	*	*		*	F15	34
C	PA-FZ-Z	3120-517-8420	NAS77-8-34	80205 .BUSHING,SLEEVE	ABC	EA	1	*	*	*		*	F15	36
	PA-FZ-Z	3020-517-1327	MS20221A2	96906 .PULLY,GROOVE	ABC	EA	1	*	*	*	REF	*	F15	37
	PA-FZ-Z	5310-167-0823	AN960-816	88044 .WASHER,FLAT	ABC	EA	2	*	*	*		*	F15	40
C	PA-FZ-Z	3120-517-8420	NAS77-8-34	80205 .BUSHING,SLEEVE	ABC	EA	1	*	*	*		*	F15	42
	PA-FZ-Z	3020-517-1327	MS20221A2	96906 .PULLY,GROOVE	ABC	EA	1	*	*	*	REF	*	F15	43
	XB-FZ-Z		NAS427K34	80205 .PIN,SPRING	ABC	EA	2						F15	45
	PA-FZ-Z	5310-306-3167	AN960C816L	88044 .WASHER,FLAT	ABC	EA	2	*	*	*		*	F15	47
C	PA-FZ-Z	5306-723-4807	AN8-45A	88044 .BOLT,MACHINE	ABC	EA	1	*	*	*		*	F15	48
	PA-FZ-Z	5310-306-3167	AN960C816L	88044 .WASHER,FLAT.....NOTE 1	ABC	EA	4	*	*	*		*	F15	49
	XB-FZ-Z		114E5126-1	77272 .LINK ASSEMBLY,MAINTENANCE	ABC	EA	V						F15	50
	PA-FZ-Z	5315-234-1856	MS24665-155	96906 .PIN,COTTER	ABC	EA	1	*	*	*		*	F15	51
	PA-FZ-Z	5310-167-1289	AN310-8	88044 .NUT,CASTELLATED	ABC	EA	1	*	*	*		*	F15	52
•	PA-FZ-Z	5306-286-0836	AN8H21	88044 .BOLT,MACHINE	ABC	EA	1	*	*	*		*	F15	54
	PB-FZ-Z	4920-872-1109	114E5119-21	77272 .TENSION ROD ASSEMBLY	ABC	EA	V	*	*	*		*	F15	55
	XB-FZ-Z		NAS1340A3C07	80205 ..PIN,QUICK RELEASE NOTE 1 MAX 2 WASHERS PER SIDE TO SHIM NOTE 2 MAX 1 WASHER PER SIDE TO SHIM	ABC	EA	1						F15	56
	XB-FZ-Z		114E5117-107	77272 MAST ASSEMBLY SEE FIG.14 FOR NHA	ABC	EA	V						F16	1
	PA-FZ-Z	5305-180-0009	AN525-10R7	88044 .SCREW,MACHINE	ABC	EA	3	*	*	*		*	F16	2
	MF-FZ-Z		114E5119-34	77272 .STRIP,RUBBING	ABC		V						F16	3
	PA-FZ-Z	5310-902-6676	MS20364-1032	96906 .NUT,SELF-LOCKING,HEXAGON	ABC	EA	2	*	*	*		*	F16	4
	PA-FZ-Z	5306-722-0393	AN3-4A	88044 .BOLT,MACHINE	ABC	EA	1	*	*	*		*	F16	5
	PA-FZ-Z	5310-167-0753	AN960D10L	88044 .WASHER,FLAT	ABC	EA	2	*	*	*		*	F16	6
	MF-FZ-Z		114E5119-38	77272 .STRIP,RUBBING	ABC		V						F16	7
	PA-FZ-Z	5306-151-1426	AN4-6A	88044 .BOLT,MACHINE	ABC	EA	8	*	*	*		*	F16	8
	PA-FZ-Z	5310-184-9001	AN960D416L	88044 .WASHER,FLAT	ABC	EA	6	*	*	*		*	F16	9
	XA----Z		40740A	72671 .HUB-TROLLEY WINCH	ABC		V						F16	10
	XB-FZ-Z		114E5119-5	77272 .LINE ASSEMBLY	ABC	EA	V						F16	10A
	PA-FZ-Z	5306-151-1426	AN4-6A	88044 .BOLT,MACHINE	ABC	EA	20	*	*	*		*	F16	11
	PA-FZ-Z	5310-184-9001	AN960D416L	88044 .WASHER,FLAT	ABC	EA	20	*	*	*		*	F16	12
	PB-FZ-Z	1730-758-4985	41175	05637 .WINCH	ABC	EA	V	2	2	2		2	F16	13
	PA-FZ-Z	5315-241-7330	MS24665-304	96906 .PIN,COTTER	ABC	EA	1	*	*	*		*	F16	14
	XB-FZ-Z		40222A	72671 .TENSION BRACKET	ABC	EA	V						F16	17
	PA-FZ-Z	5315-234-1854	MS24665-153	96906 .PIN,COTTER	ABC	EA	1	*	*	*		*	F16	18
	PA-FZ-Z	5310-187-2354	AN960PD416	88044 .WASHER,FLAT	ABC	EA	2	*	*	*		*	F16	20

(1) SMR CODE	(2) FEDERAL STOCK NUMBER	(3) DESCRIPTION REFERENCE NUMBER & MFR CODE			USABLE ON CODE CH-47	(4) UNIT OF MEAS	(5) QTY INC IN UNIT	(6) 30-DAY DS/GS MAINT ALW (a) 1-20	(b) 21-50	(c) 51-100	(7) 1-YR ALWPER 100 EQUIP CNTGCY	(8) DEPOT MAINT ALWPER 100 EQUIP	(9) ILLUSTRATION (a) FIG NO	(b) ITEM NO
		FUNCTIONAL GROUP - 40	GROUND	SUPPORT AND FLYAWAY ITEMS										
XB-FZ-Z		40223A	72671	.TENSION SPRING.....	A	EA	1						F16	21
PA-FZ-Z	5315-236-8362	MS24665-376	96906	.PIN,COTTER.....	ABC	EA	1	*	*	*		*	F16	23
PA-FZ-Z	5310-282-4776	MS20002-14	96906	.WASHER,LOCK.....	ABC	EA	1	*	*	*		*	F16	25
XB-FZ-Z		114E5119-14	77272	.BOLT.....	ABC	EA	V						F16	26
PA-FZ-Z	5310-149-9120	MS20002C14	96906	.WASHER,LOCK.....	ABC	EA	1	*	*	*		*	F16	27
XB-FZ-Z		114E5119-16	77272	.SPACER.....	ABC	EA	V						F16	28
PA-FZ-Z	5306-680-6779	AN3-6	88044	.BOLT,MACHINE.....	ABC	EA	2	*	*	*		*	F16	30
PA-FZ-Z	5310-167-0753	AN960D10L	88044	.WASHER,FLAT.....	ABC	EA	2	*	*	*		*	F16	31
PB-FZ-Z	1730-921-8569	FDC3605M22	98313	.STRAP ASSEMBLY.....	A	EA	1	*	*	*		*	F16	32
PA-FZ-Z	5315-234-1854	MS24665-153	96906	.PIN,COTTER.....	ABC	EA	1	*	*	*		*	F16	33
PA-FZ-Z	5310-187-2354	AN960PD416	88044	.WASHER,FLAT.....	ABC	EA	2	*	*	*		*	F16	34
PA-FZ-Z	5315-241-7330	MS24665-304	96906	.PIN,COTTER.....	ABC	EA	1	*	*	*		*	F16	36
PA-FZ-Z	5310-187-2400	AN960D616	88044	.WASHER,FLAT.....	ABC	EA	2	*	*	*		*	F16	37
XB-FZ-Z		40222A	72671	.TENSION BRACKET.....	ABC	EA	1						F16	39
XB-FZ-Z		40223A	72671	.SPRING,HELICAL.....	A	EA	1						F16	40
PA-FZ-Z	5306-151-1426	AN4-6A	88044	.BOLT,MACHINE.....	ABC	EA	6	*	*	*		*	F16	41
PA-FZ-Z	5310-184-9001	AN960D416L	88044	.WASHER,FLAT.....	ABC	EA	8	*	*	*		*	F16	42
XA----Z		40741B	72671	.HUB-LOAD WINCH.....	ABC		1						F16	43
PA-FZ-Z	5306-151-1426	AN4-6A	88044	.BOLT,MACHINE.....	ABC	EA	20	*	*	*		*	F16	44
PA-FZ-Z	5310-184-9001	AN960D416L	88044	.WASHER,FLAT.....	ABC	EA	20	*	*	*		*	F16	45
PB-FZ-Z	1730-758-4986	41176	05637	.WINCH.....	ABC	EA	V	1	1	1		1	F16	46
PA-FZ-Z	5310-902-6676	MS20364-1032	96906	.NUT,SELF-LOCKING,HEXAGON....	ABC	EA	2	*	*	*		*	F16	47
PA-FZ-Z	5306-722-0393	AN3-4A	88044	.BOLT,MACHINE.....	ABC	EA	2	*	*	*		*	F16	48
PA-FZ-Z	5310-167-0753	AN960D10L	88044	.WASHER,FLAT.....	ABC	EA	2	*	*	*		*	F16	49
PA-FZ-Z	5306-274-2119	AN3-5A	88044	.BOLT,MACHINE.....	ABC	EA	1	*	*	*		*	F16	50
XB-FZ-Z		114E5119-37	77272	.STRIP,RUBBING.....	ABC	EA	V						F16	51
XB-FZ-Z		114E5115-11	77272	AZIMUTH DRIVE ASSEMBLY..... SEE FIG.14 FOR NHA	ABC	EA	1						F17	1
PB-FZ-Z	5340-903-8205	NAS1338A3C67	80205	.PIN,QUICK RELEASE.....	ABC	EA	1	*	1	2		*	F17	1A
XA----Z		114E5121-1	77272	.HOUSING ASSEMBLY AZIMUTH....	ABC		V						F17	2
PA-FZ-Z	5310-141-1795	AN960-416	88044	.WASHER,FLAT.....	ABC	EA	9	*	*	*		*	F17	4
PA-FZ-Z	5310-167-0835	AN960-416L	88044	.WASHER,FLAT.....	ABC	EA	9	*	*	*		*	F17	5
PA-FZ-Z	5306-182-2017	AN4H6A	88044	.BOLT,MACHINE.....	ABC	EA	9	*	*	*		*	F17	6
XB-FZ-Z		114E5121-3	77272	.CAP ASSEMBLY,AZIMUTH.....	ABC	EA	V						F17	7
XB-FZ-Z		114E5122-1	77272	.WORM GEAR,AZIMUTH.....	ABC	EA	V						F17	9
PA-FZ-Z	5310-141-1795	AN960-416	88044	.WASHER,FLAT.....	ABC	EA	2	*	*	*		*	F17	11
PA-FZ-Z	5306-151-1420	AN4-14A	88044	.BOLT,MACHINE.....	ABC	EA	1	*	*	*		*	F17	12
XB-FZ-Z		114E5123-15	77272	.SHAFT,AZIMUTH,DRIVE.....	ABC	EA	1						F17	13
PA-FZ-Z	3120-089-2726	114E5115-4	77272	.BEARING,WASHER THRUST.....	ABC	EA	2	*	*	*		*	F17	15
XA----Z		114E5122-3	77272	.WORM GEAR,AZIMUTH.....	AB		1						F17	16
PA-FZ-Z	5310-141-1795	AN960-416	88044	.WASHER,FLAT.....	ABC	EA	2	*	*	*		*	F17	18
PA-FZ-Z	5306-151-1420	AN4-14A	88044	.BOLT,MACHINE.....	ABC	EA	1	*	*	*		*	F17	19
XB-FZ-Z		114E5123-13	77272	.CONNECTOR,SHAFT.....	ABC	EA	V						F17	20
PA-FZ-Z	5310-141-1795	AN960-416	88044	.WASHER,FLAT.....	ABC	EA	1	*	*	*		*	F17	22
PA-FZ-Z	5310-167-0835	AN960-416L	88044	.WASHER,FLAT.....	ABC	EA	1	*	*	*		*	F17	23
PA-FZ-Z	5306-182-2017	AN4H6A	88044	.BOLT,MACHINE.....	ABC	EA	1	*	*	*		*	F17	24

	(1) SMR CODE	(2) FEDERAL STOCK NUMBER	(3) DESCRIPTION — REFERENCE NUMBER & MFR CODE		USABLE ON CODE	(4) UNIT OF MEAS	(5) QTY INC IN UNIT	(6) 30-DAY DS/GS MAINT ALW (a) 1-20	(b) 21-50	(c) 51-100	(7) 1-YR ALWPER 100 EQUIP CNTGCY	(8) DEPOT MAINT ALWPER 100 EQUIP	(9) ILLUSTRATION (a) FIG NO	(b) ITEM NO
			FUNCTIONAL GROUP - 40 GROUND SUPPORT AND FLYAWAY ITEMS		CH-47									
							V						F17	25
	XA----Z		114E5121-5	77272	.CAP ASSEMBLY,AZIMUTH.....	AB	EA 1	*	*	*		*	F17	26
	XA----Z		114E5123-1	77272	.SCREW ASSEMBLY,CAPTIVE.....		1						F17	26A
C	PB-FZ-Z	1730-921-8568	114E5123-17	77272	..CABLE,AZIMUTH.....	ABC	1						F17	27
	MF-FZ-Z		114E5123-35	77272	.PINION SHAFT,AZIMUTH.....	ABC	EA 1	*	*	*		*	F17	29
	XB-FZ-Z		MS20365-1032	96906	.NUT,SELF-LOCKING.....	ABC	EA 1	*	*	*		*	F17	30
	PA-FZ-Z	5310-877-5797	AN3-14A	88044	.BOLT,MACHINE.....	ABC	EA 1	*	*	*		*	F17	31
	PA-FZ-Z	5306-151-0780	404858	91796	.HANDLE,PINION SHAFT.....	ABC	EA V	*	*	*			F17	32
	PB-FZ-Z	1730-943-1286	114E5115-3	77272	.WASHER,THRUST.....	ABC	EA 2						F17	33
	XB-FZ-Z		HS609	90052	.GEAR HELICAL.....	ABC	EA 1						F17	34
	XB-FZ-Z		114E5123-11	77272	.SHAFT,PINION,AZIMUTH.....	ABC	EA V						F17	36
	XB-FZ-Z		114E5115-2	77272	.BEARING,WASHER THRUST.....	ABC	EA 2	*	*	*		*	F17	37
	PA-FZ-Z	3120-089-2725	HS618	90052	.GEAR,HELICAL,AZIMUTH.....	ABC	EA 1						F17	
	XB-FZ-Z													
			A02E5865-27	77272	CABIN,UPRIGHT ASSEMBLY.....	ABC	EA 1						F18	1
	XB-FZ-Z				SEE FIG.14 FOR NHA									
			A02E5865-3	77272	.TUBE ASSEMBLY,UPPER.....	ABC	1						F18	2
	XA----Z		A02E5865-12	77272	..TUBE,UPPER,CABIN UPRIGHT...	ABC	EA 1						F18	3
	XB-FZ-Z		A02E5865-16	77272	..TUBE,UPPER,CABIN UPRIGHT...	ABC	EA 1						F18	4
	XB-FZ-Z		A02E5865-15	77272	..PLATE,UPPER TUBE ASSEMBLY..	ABC	EA 1						F18	5
	XB-FZ-Z		A02E5865-17	77272	..BUSHING,SLEEVE.....	ABC	EA 1						F18	6
	XB-FZ-Z		A02E5865-24	77272	..PIN,SHOULDER,HEADLESS.....	ABC	EA 2						F18	7
	XB-FZ-Z		A02E5865-14	77272	..BUSHING,HALF SLEEVE.....	AB	EA 1						F18	8
C	XB-FZ-Z		A02E5865-22	77272	.HANDLE,CABIN UPRIGHT.....	ABC	EA 4						F18	9
	XB-FZ-Z				ASSEMBLY									
			A02E5865-23	77272	.BAR,CABIN UPRIGHT ASSEMBLY..	ABC	EA 1						F18	10
	XB-FZ-Z		A02E5865-25	77272	.CLIP,CABIN UPRIGHT ASSEMBLY.	ABC	EA 1						F18	11
	XB-FZ-Z		A02E5865-26	77272	.CLIP,CABIN UPRIGHT ASSEMBLY.	ABC	EA 1						F18	12
	XB-FZ-Z		MS35207-261	96906	.SCREW,MACHINE.....	ABC	EA 4	*	*	*		*	F18	13
	PA-FZ-Z	5305-990-6444	A02E5865-28	77272	.TUBE ASSEMBLY,LOWER,CABIN...	ABC	1						F18	14
	XA----Z		A02E5865-29	77272	..TUBE,CONNECTING ASSEMBLY...	ABC	1						F18	15
	XA----Z		16108	95879	...FITTING,LUBRICATING.....	A	EA 1						F18	
	XB-FZ-Z		A02E5865-9	77272	...TUBE,LOWER,CABIN UPRIGHT..	ABC	EA 1						F18	16
	XB-FZ-Z		A02E5865-6	77272	...TUBE,LOWER CABIN UPRIGHT..	ABC	EA 1						F18	17
	XB-FZ-Z		A02E5865-10	77272	...TUBE,PILOT,LOWER,CABIN....	ABC	EA 3						F18	18
	XB-FZ-Z		A02E5865-20	77272	...TUBE,LOWER,CABIN UPRIGHT..	ABC	EA 1						F18	19
	XB-FZ-Z		A02E5865-5	77272	...TUBE,LOWER,CABIN UPRIGHT..	ABC	1						F18	20
	XA----Z		NAS1343A2C67	80205	.PIN,QUICK RELEASE.....	ABC	EA 1	*	*	1		*	F18	20A
	PB-FZ-Z	5340-903-8209	NAS1338A2C64	80205	.PIN,QUICK RELEASE.....	ABC	EA 1	*	1	2		*	F18	20B
	PB-FZ-Z	5340-903-8207	A02E5865-32	77272	...TUBE,CONNECTING,CABIN.....	ABC	EA V						F18	21
	XB-FZ-Z		AN6-7A	88044	...BOLT,MACHINE.....	ABC	EA 4	*	*	*		*	F18	22
	PA-FZ-Z	5306-531-8979	A02E5865-38	77272	..PIN,CABIN UPRIGHT ASSEMBLY.	ABC	EA 1						F18	23A
	XB-FZ-Z		MS16998-44	96906	..SCREW,SOCKET HEAD.....	ABC	EA 6	*	*	*		*	F18	24
C	PB-FZ-Z	5305-983-6661	A02E5865-33	77272	..BEARING,CABIN UPRIGHT.....	ABC	EA 1						F18	26
	XB-FZ-Z		MS27039-4-08	96906	..SCREW.....	ABC	EA 4	*	*	*		*	F18	27
C	PA-FZ-Z	5305-891-1782	A02E5865-34	77272	..CLAMP.....	A	EA 1						F18	28
	XB-FZ-Z		A02E5865-35	77272	..GASKET.....	A	EA 1						F18	29
	XB-FZ-Z		A02E5865-36	77272	..RETAINER,PACKING.....	A	EA V						F18	30
N	XB-FZ-Z													

	(1) SMR CODE	(2) FEDERAL STOCK NUMBER	(3) REFERENCE NUMBER & MFR CODE	DESCRIPTION	USABLE ON CODE	(4) UNIT OF MEAS	(5) QTY INC IN UNIT	(6) 30-DAY DS/GS MAINT ALW a 1-20	b 21-50	c 51-100	(7) 1-YR ALWPER FOR EQUIP ON HAND	(8) DEPOT MAINT ALWPER FOR EQUIP	(9) ILLUSTRATION a FIG NO	b ITEM NO
			FUNCTIONAL GROUP - 40	GROUND SUPPORT AND FLYAWAY ITEMS	CH-47									
	XB-FZ-Z		A02E5865-30	77272 ..BASE ASSEMBLY,CABIN UPRIGHT	ABC	EA	1						F18	31
	XB-FZ-Z		A02E5865-31	77272 ...BALL END,CRANE,MAINTENANCE	ABC	EA	1						F18	32
	XB-FZ-Z		A02E5865-39	77272 ...BASE,CABIN UPRIGHT..... ASSEMBLY	ABC	EA	1						F18	33
C	PA-FZ-Z	5305-983-6659	MS16998-42	96906 ..SCREW,SOCKET HEAD.....	ABC	EA	1	*	*	*		*	F18	34
	XB-FZ-Z		A02E5865-37	77272 ..LOCATOR,CABIN UPRIGHT.....	ABC	EA	1						F18	36
	XB-FZ-Z		A02E5864-15	77272 BASE PLATE ASSEMBLY..... SEE FIG.F14 FOR NHA	ABC	EA	1						F19	1
	XB-FZ-Z		A02E5864-14	77272 .HANDKNOB ASSEMBLY,BASE.....	ABC	EA	V						F19	2
C	------Z	5340-903-8204	NAS1334A2C14	96906 .BOLT,MACHINE.....	ABC	EA	1	*	*	*		*	F19	3
C				80205 .PIN,QUICK RELEASE..... RPL-BY 5340-143-0073	ABC	EA	1						F19	4
N	PB-FZ-Z	5340-143-0073	NAS1334A2C14	80205 .PIN,QUICK RELEASE.....	AB	EA	V	*	*	*		*	F19	4
	PA-FZ-Z	5310-167-0835	AN960-416L	88044 .WASHER,FLAT.....	ABC	EA	V	*	*	*		*	F19	5
	XB-FZ-Z		A02E5864-16	77272 .WELDMENT,BASE PLATE.....	ABC	EA	V						F19	6
	XA----Z		A02E5864-3	77272 ..PLATE,BASE,MAINTENANCE.....	ABC		1						F19	7
	XA----Z		A02E5864-4	77272 ..PLATE,SIDE,MAINTENANCE.....	ABC		V						F19	8
	XA----Z		A02E5864-5	77272 ..SUPPORT,WELDMENT..... MAINTENANCE	ABC		V						F19	9
	XA----Z		1468-1-8	99057 ..INSERT,SCREW THREAD.....	AB		14						F19	10
	PA-FZ-Z	5365-630-7111	10606512-3	18876 ..RING,LOCK,KEYED.....	ABC	EA	V	REF	REF	REF		*	F19	11
	XB-FZ-Z		1146-1-6	99057 ..INSERT,SCREW THREAD.....	ABC	EA	6						F19	12
	XB-FZ-Z		KR6-1	99057 ..RING,LOCK,KEYED.....	ABC	EA	6						F19	13
	XB-FZ-Z		114E5116-23	77272 JIB BOOM ASSEMBLY,MAINTENANCE	ABC	EA	V						F20	1
	XB-FZ-Z		114E5129-1	77272 .BOOM ASSEMBLY,JIB..... MAINTENANCE	ABC	EA	V						F20	2
	PA-FZ-Z	5310-187-2400	AN960PD616	88044 ..WASHER,FLAT.....	ABC	EA	8	*	*	*		*	F20	4
	PA-FZ-Z	5306-151-1337	AN6-14	88044 ..BOLT,MACHINE.....	ABC	EA	2	*	*	*		*	F20	6
	XB-FZ-Z		114E5129-31	77272 ..PLATE SUPPORT JIB BOOM.....	ABC	EA	V						F20	7
C	PA-FZ-Z	5315-597-1543	NAS427K18	80205 ...PIN,SPRING.....	ABC	EA	3	*	*	*		*	F20	8
	PA-FZ-Z	5310-167-0751	AN960PD816	88044 ...WASHER,FLAT.....	ABC	EA	2	*	*	*		*	F20	10
C	PA-FZ-Z	5306-208-3645	AN8-15A	88044 ...BOLT,MACHINE.....	ABC	EA	1	*	*	*		*	F20	11
	PA-FZ-Z	3020-517-1327	MS20221A2	96906 ...PULLEY,GROOVE.....	ABC	EA	1	*	*	*	REF	*	F20	12
	PA-FZ-Z	5310-857-5559	MS21045L5	96906 ...NUT,SELF LOCKING.....	ABC	EA	1	*	*	*		*	F20	13
C	PA-FZ-Z	5306-144-3853	AN25-17	88044 ...WASHER,FLAT.....	ABC	EA	2	*	*	*		*	F20	14
	XB-FZ-Z		114E5129-3	88044 ...BOLT,CLEVIS.....	ABC	EA	1	*	*	*		*	F20	15
C	------Z	5340-903-8203	NAS1335A3C09	77272 ...TUBE ASSEMBLY,TENSION JIB.	ABC	EA	1						F20	16
	XB-FZ-Z		114E5129-19	80254 ....PIN,QUICK RELEASE.....	ABC	EA	1						F20	17
	MF-FZ-Z		114E5116-9	77272 ....STRAP,JIB BOOM ASSEMBLY..	ABC	EA	1						F20	18
	PB-FZ-Z	4030-431-5536	28-1C	77272 ....CABLE,JIB BOOM ASSEMBLY..	ABC		2						F20	19
				76691 ....SWAGGING SLEEVE,WIRE ROPE	ABC	EA	4	*	*	*		*	F20	20

	(1) SMR CODE	(2) FEDERAL STOCK NUMBER	(3) DESCRIPTION — REFERENCE NUMBER & MFR CODE		USABLE ON CODE CH-47	(4) UNIT OF MEAS	(5) QTY INC IN UNIT	(6) 30-DAY DS/GS MAINT ALW (a) 1-20	(b) 21-50	(c) 51-100	(7) 1-YR ALWPER 100 EQUIP CNTGCY	(8) DEPOT MAINT ALWPER 100 EQUIP	(9) ILLUSTRATION (a) FIG NO	(b) ITEM NO
			FUNCTIONAL GROUP - 40	GROUND SUPPORT AND FLYAWAY ITEMS										
	PA-FZ-Z	5310-298-9267	AN315-8R	88044 ..NUT,PLAIN,HEXAGON.....	ABC	EA	2	*	*	*		*	F20	21
C	PA-FZ-Z	5310-167-0823	AN960-816	88044 ..WASHER,FLAT.....	ABC	EA	2	*	*	*		*	F20	22
	PB-FZ-Z	1730-112-0586	A02E5876-25	77272 ..WINCH ASSEMBLY,JIB.....	ABC	EA	1	1	1	1		1	F20	25
	XB-FZ-Z		A02E5876-24	77272 ...HANDLE,WINCH,JIB BOOM.....	A	EA	1						F20	25A
	PA-FZ-Z	5320-117-6840	MS20470AD5-7	96906 ...RIVIT,SOLID.....	ABC	LB	4	*	*	*		*	F20	26
	XB-FZ-Z		A02E5876-6	77272 ...GEAR,SPUR.....	ABC	EA	1						F20	27
	XB-FZ-Z		A02E5876-15	77272 ...SPUR,GEAR.....	ABC	EA	1						F20	29
	PB-FZ-Z	5340-903-8210	NAS1343A3-66	80205 ....PIN,QUICK RELEASE.....	ABC	EA	1	*	1	1		*	F20	30
	MF-FZ-Z		114E5116-7	77272 ....CABLE,JIB BOOM ASSEMBLY..	ABC		1						F20	31
	PB-FZ-Z	4030-431-5536	28-1C	76691 ....SWAGGING SLEEVE,WIRE ROPE	ABC	EA	2	*	*	*		*	F20	32
	PB-OZ-Z	1730-034-3874	114E5900-14	77272 SPACER SET,RIGGING..... SWASHPLATE-4 SPACERS PER SET	ABC	SE	V	1	1	1		1	F21	1
C	------Z	1730-906-1350	114E5130-35	77272 POLE ASSEMBLY,BLADE REWKTO.. 114E5130-49 USING KIT 114GK012-1	A	EA							F21	2
	PB-OZ-Z	1730-220-5288	114GK012-1	77272 MODIFICATION KIT.....	ABC	EA	V	*	*	*		*	F21	
	PB-OZ-Z	1730-879-3054	114E5130-49	77272 POLE,BLADE FOLDING.....	ABC	EA	V	1	1	1		1	F21	2
	PB-FZ-Z	4920-801-6939	114E5874-1	77272 ADAPTER ASSEMBLY,TRANSMISSION	ABC	EA	V	*	*	*		*	F21	3
	PB-DZ-Z	4920-837-9420	114G1196-1	77272 STAND,BALANCING.....	ABC	EA	V					1	F21	4
	PB-FZ-Z	1730-758-5020	114E5996-27	77272 SECURING DEVICE ASSEMBLY.....	ABC	EA	V	1	1	1		1	F21	5
	PB-FZ-Z	1740-516-7929	100334	01413 TRAILER,AIRCRAFT ENGINE..... ALUMINUM FRAME,PNEUMATIC TIRES,41-50 IN.H,56 IN.W,97 IN.LG,W/DRAWBAR	ABC	EA	1	1	1	1		1	F21	6
	PB-DD-Z	4920-437-7557	114G1348-1	77272 EXCITER,VIBRATION.....	C	EA	V					*	F22	1
C			MB9352351	37362 .CABLE ASSEMBLY.....	C	EA	1						F22	
C	X2-DZ-Z		1866-60-103	83330 .LEAD,TEST.....	C	EA	1						F22	
C	X2-DZ-Z		1866-60-102	83330 .LEAD,TEST.....	C	EA	1						F22	
C	X2-DZ-Z		4-102-0001	09384 .PICKUP,LINEAR.....	C	EA	1						F22	
C	X2-DZ-Z		2250MB	37362 .AMPLIFIER.....	C	EA	1						F22	
C	X2-DZ-Z		114G5066-1	77272 .CABLE ASSEMBLY.....	C	EA	1						F22	
C	X2-DZ-Z		114G5061-1	77272 .CABLE ASSEMBLY.....	C	EA	1						F22	
C	X2-DZ-Z		MB9353361	37362 .CABLE ASSEMBLY.....	C	EA	1						F22	
	XB-DZ-Z		PM100	37362 .EXCITER,VIBRAMATIC.....	C	EA	2					1	F22	2
	PB-DZ-Z	4920-437-7558	114G1409-1	77272 SIMULATOR VIBRATION.....	C	EA	V					*	F22	3
C	PB-DD-D	4920-250-4659	114G1377-1	77272 FIXTURE,TEST,VIBRATION.....	C	EA	V			1	1	1	F22	4
C	PB-HB-Z	4920-964-1300	114G1143-1	77272 FIXTURE,SETTING.....	ABC	EA	V		1	1	1	1	F22	5
	PB-FZ-Z	4920-484-3958	114G1208-1	77272 TEST SET,VISCOUS DAMPER.....	ABC	EA	V	1	*	*	*	*	F22	6
	PB-OZ-Z	1730-168-5439	114G1390-1	77272 ADAPTER,AIRCRAFT TOWING.....	ABC	EA	V	*	*	*	*	*	F22	7
	PB-OZ-Z	1730-827-0619	114E5110-185	77272 RACK,ROTARY WING BLADES..... SPL RQMTS REQUIRED FOR FORT	BC	EA	1	1	1	1		1	F22	

	(1) SMR CODE	(2) FEDERAL STOCK NUMBER	(3) DESCRIPTION — REFERENCE NUMBER & MFR CODE			USABLE ON CODE	(4) UNIT OF MEAS	(5) QTY INC IN UNIT	(6) 30-DAY DS/GS MAINT ALW (a) 1-20	(b) 21-50	(c) 51-100	(7) 1-YR ALWPER 100 EQUIP CNTGCY	(8) DEPOT MAINT ALWPER 100 EQUIP	(9) ILLUSTRATION (a) FIG NO	(b) ITEM NO
			FUNCTIONAL GROUP - 40	GROUND	SUPPORT AND FLYAWAY ITEMS	CH-47									
					CONTINUED										
					SILL ONLY										
	PB-OZ-Z	1730-867-1250	114E5110-30	77272	RACK SET ASSEMBLY,ROTARY.....	A	EA	1	*	*	*		*	F22	7
														F22	7
C	PB-DZ-D	4920-590-8663	LT3292	35351	TEST SET,SYNCHRONIZED.....	ABC	EA	V					*	F23	
	PB-HZ-Z	4920-917-7089	114GS012-1	77272	TEST SET,HYDRAULIC.....	ABC	EA	V	*	*	*		*	F23	1
	PA-OZ-Z	3910-926-1056		81349	CONVEYOR,WHEEL,GRAVITY..... MIL-C-5927STYLE3	ABC	EA	V	*	*	*		*	F23	
	PB-FZ-Z	1730-863-5786	114E5871-1	77272	ADAPTER ASSEMBLY,FORWARD..... TRANSMISSION	ABC	EA	V	1	1	1		1	F23	2
	PA-OZ-Z	1560-606-0641	360897-1	98897	ADAPTER ASSEMBLY U/W..... 3910-926-1056	ABC	EA	V	*	*	*	5	*	F23	
	PB-FZ-Z	1730-755-6724	114E5878-49	77272	ADAPTER ASSEMBLY,DRIVE SHAFT.	ABC	EA	V	1	1	1		1	F23	3
	PA-OZ-Z	1670-692-7823	48A7141-1	98745	CLAMP ASSEMBLY,CONVEYOR U/W. 3910-926-1056	AB	EA	V						F23	
C	PB-FZ-Z	1730-879-3069	114E5879-41	77272	ADAPTER ASSEMBLY.....	ABC	EA	1	1	1	1		1	F23	4
	PB-DZ-Z	4920-701-6129	T170	01014	TEST SET,CONTROL U/O..... C1736T170	ABC	EA	V					*	F23	
C	PB-FZ-Z	1740-462-8761	114G1354-1	77272	ADAPTER,TRANSPORTATION..... USBL EFF 66-19098 B-356 AND SUBS	BC	EA	V	1	1	1		1	F23	5
	PB-DZ-Z	4920-916-6169	C1736T170	01014	.CABLE ASSEMBLY U/W T170....	ABC	EA	V					*	F23	
C	PB-DD-D	4920-229-6689	114G1218-1	77272	TEST SET DYNAMIC ABSORBER....	BC	EA	V						F23	6
C	PB-FZ-Z	4920-863-5769	114E5881-1	77272	ADAPTER ASSEMBLY.....	ABC	EA	V	1	1	1		1	F23	7
	PB-FZ-Z	1730-986-3702	104568	01413	ADAPTER ASSEMBLY,SINGLE AIR.. LOG TRAILER	ABC	EA	1	8	8	8		8	F23	
C	PB-DF-Z	1730-203-4697	53D22004	80049	JACK,AIRCRAFT LANDING.....	ABC	EA	V	*	*	*		*	F24	1
C	PB-DF-Z	1730-540-2343	53D22020	80049	JACK,AIRCRAFT LANDING.....	ABC	EA	V	*	*	*		*	F24	2
	PB-OZ-Z	4920-245-1832	AF5	31989	DISPENSER,HYDRAULIC.....	ABC	EA	V	*	*	*		*	F24	3
	PB-OZ-Z	6685-248-6974	48C929-2	80049	GAGE ASSEMBLY,AIR PRESSURE...	ABC	EA	V	*	*	*		*	F24	4
	XB-DZ-Z		114G1172-1	77272	CRADLE,CABIN SECTION.....	ABC	EA	V						F24	5
	XB-DZ-Z		114G1173-1	77272	CRADLE,AFT SECTION.....	ABC	EA	V						F24	6
	XB-DZ-Z		114G1171-1	77272	CRADLE,COCKPIT SECTION.....	ABC	EA	V						F24	7
N	PA-OZ-Z	4925-973-3759	115	12848	TESTER,SQUIB.....	ABC	EA	V	*	*	*		*	F24	
C	PB-HZ-H	4920-245-1831	114G1264-1	77272	FIXTURE,VIBRATION.....	BC	EA	V	1	1	1		1	F25	1
	PB-DZ-Z	1730-927-3633	114E5993-10	77272	ADAPTER,ROTOR HOIST.....	ABC	EA	V					*	F25	2
C	PB-DD-D	4920-929-3673	HP5900TF2	84685	FIXTURE,SHOCK ABSORBER.....	ABC	EA	V	*	*	*		*	F25	3
	PB-DZ-Z	4920-107-4741	114G1118-1	77272	SUPPORT RACK ROTOR BLADE.....	ABC	EA	V					1	F25	4
	XB-DZ-Z		114G1310-1	77272	ADAPTER,BALANCE SHAFT.....	C	EA	V						F25	5

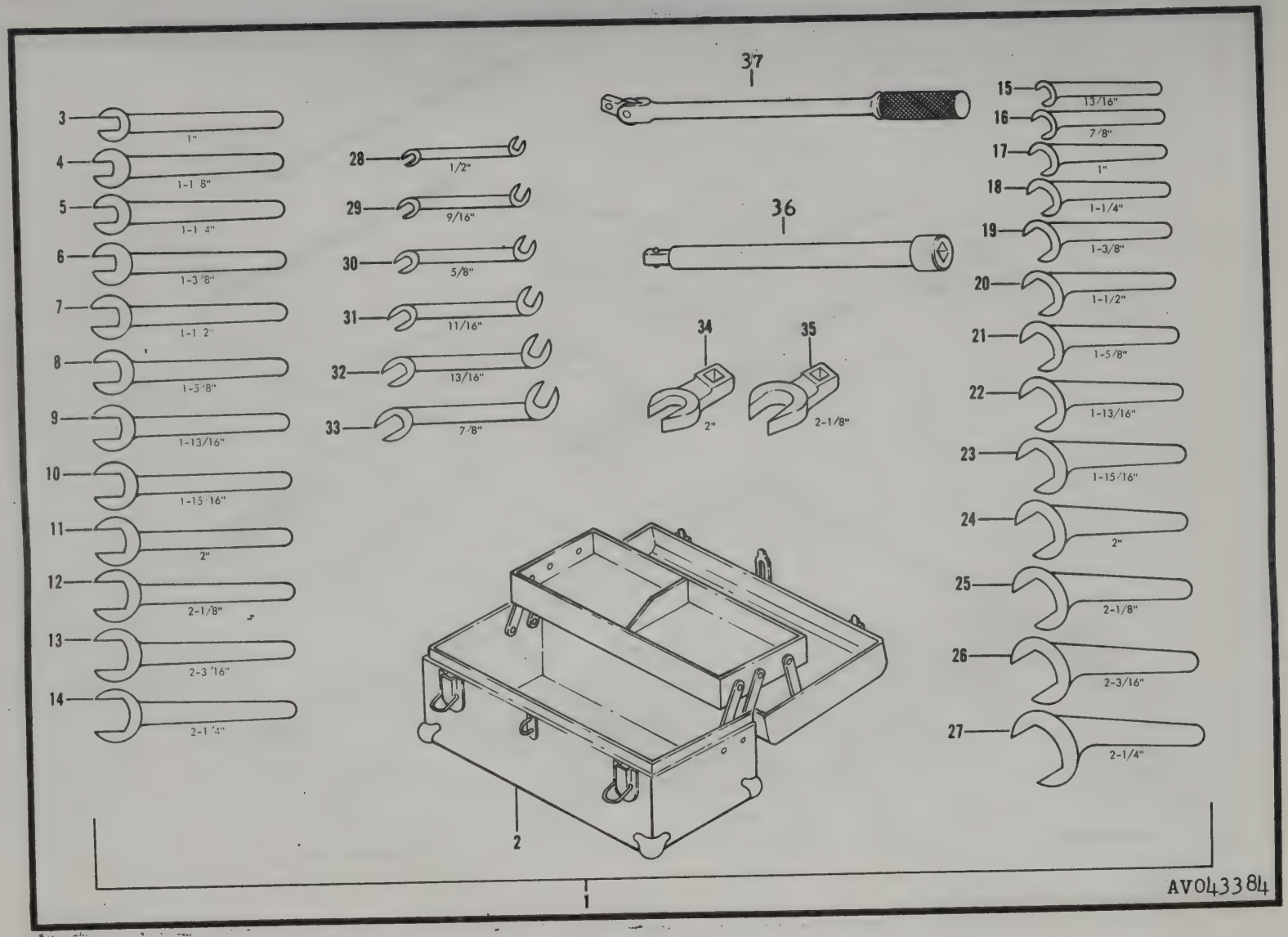

Figure F1 Flyaway Items

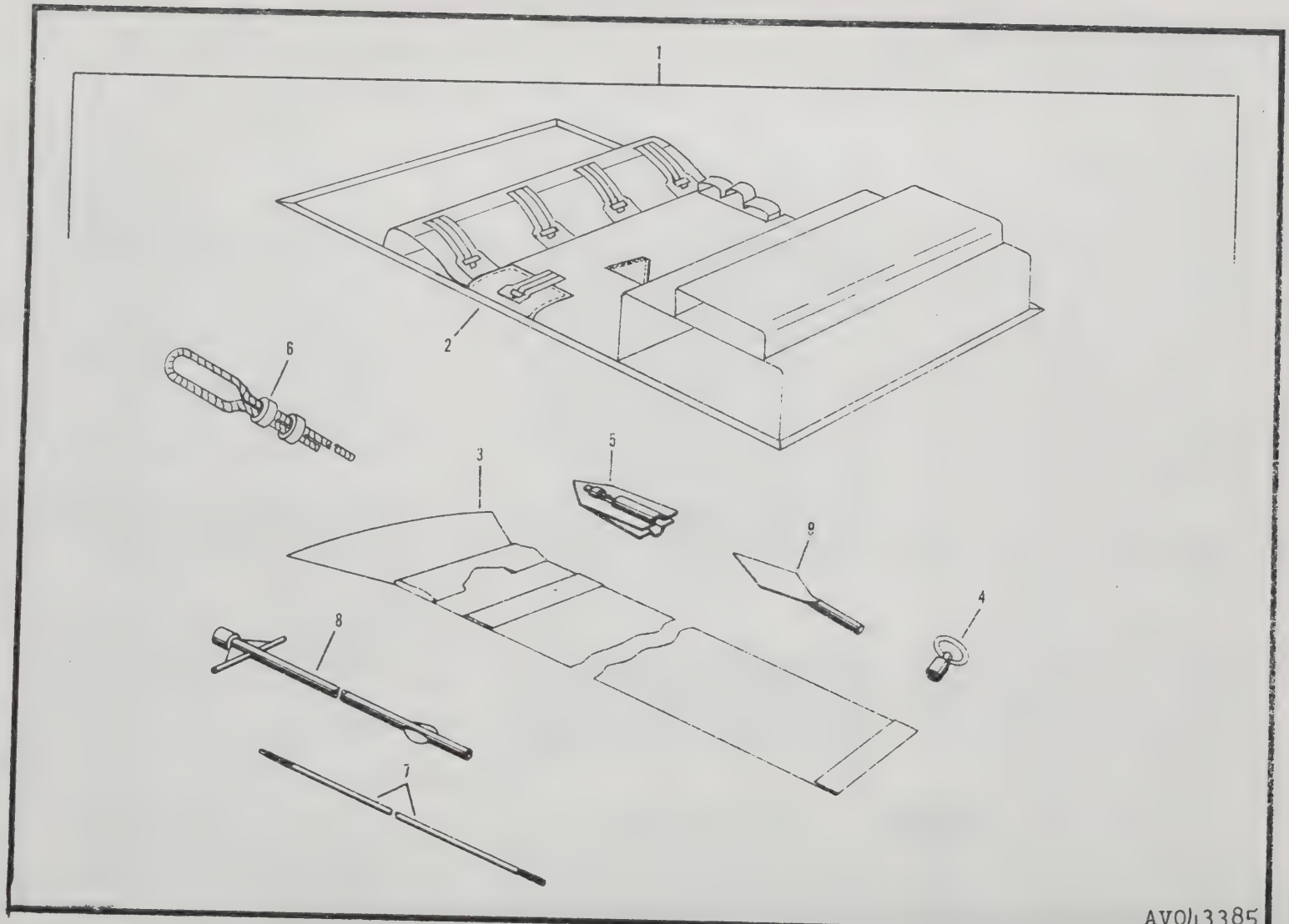

1976

Figure F2. Flyaway Items

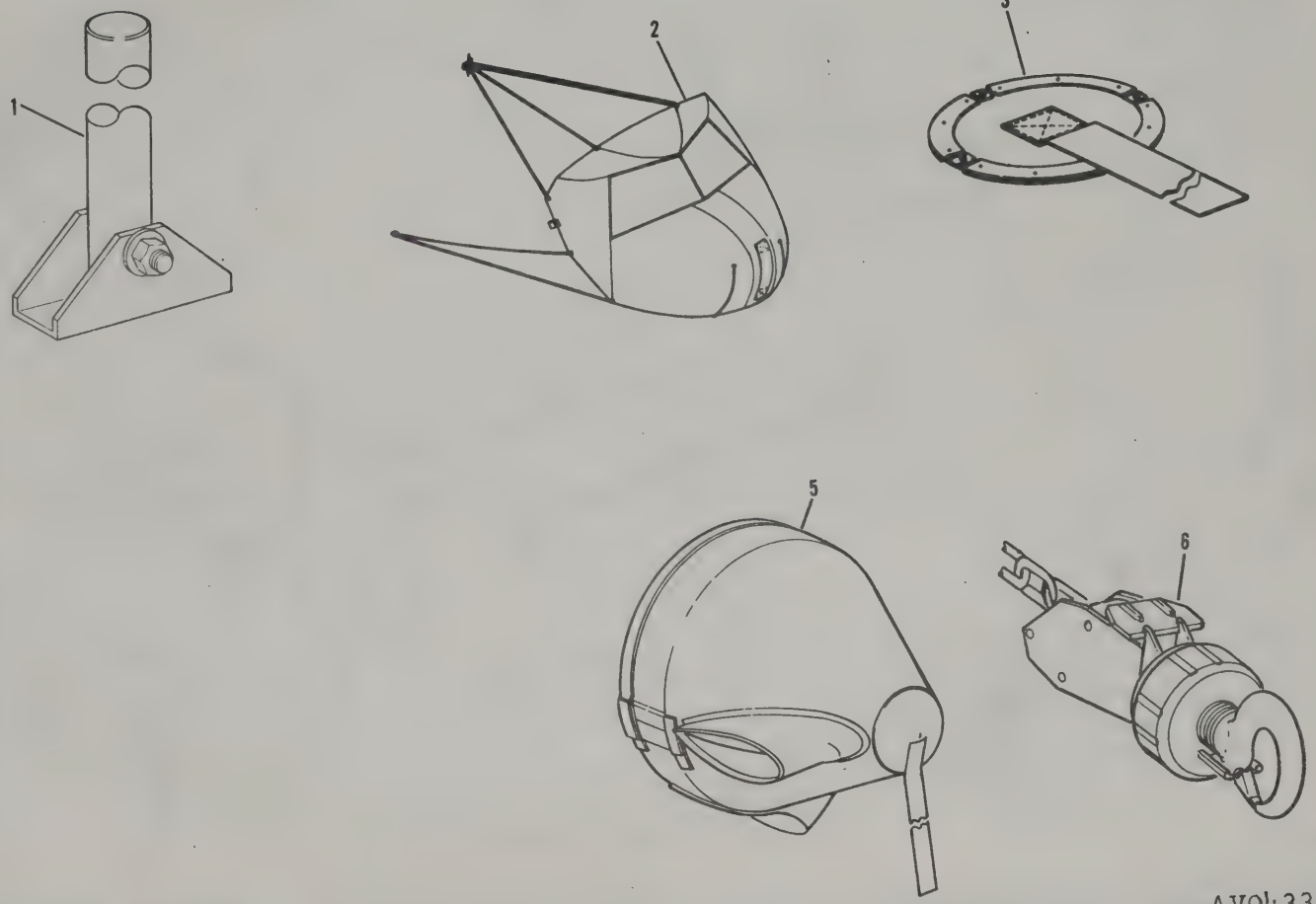

Figure F3. Flyaway Items

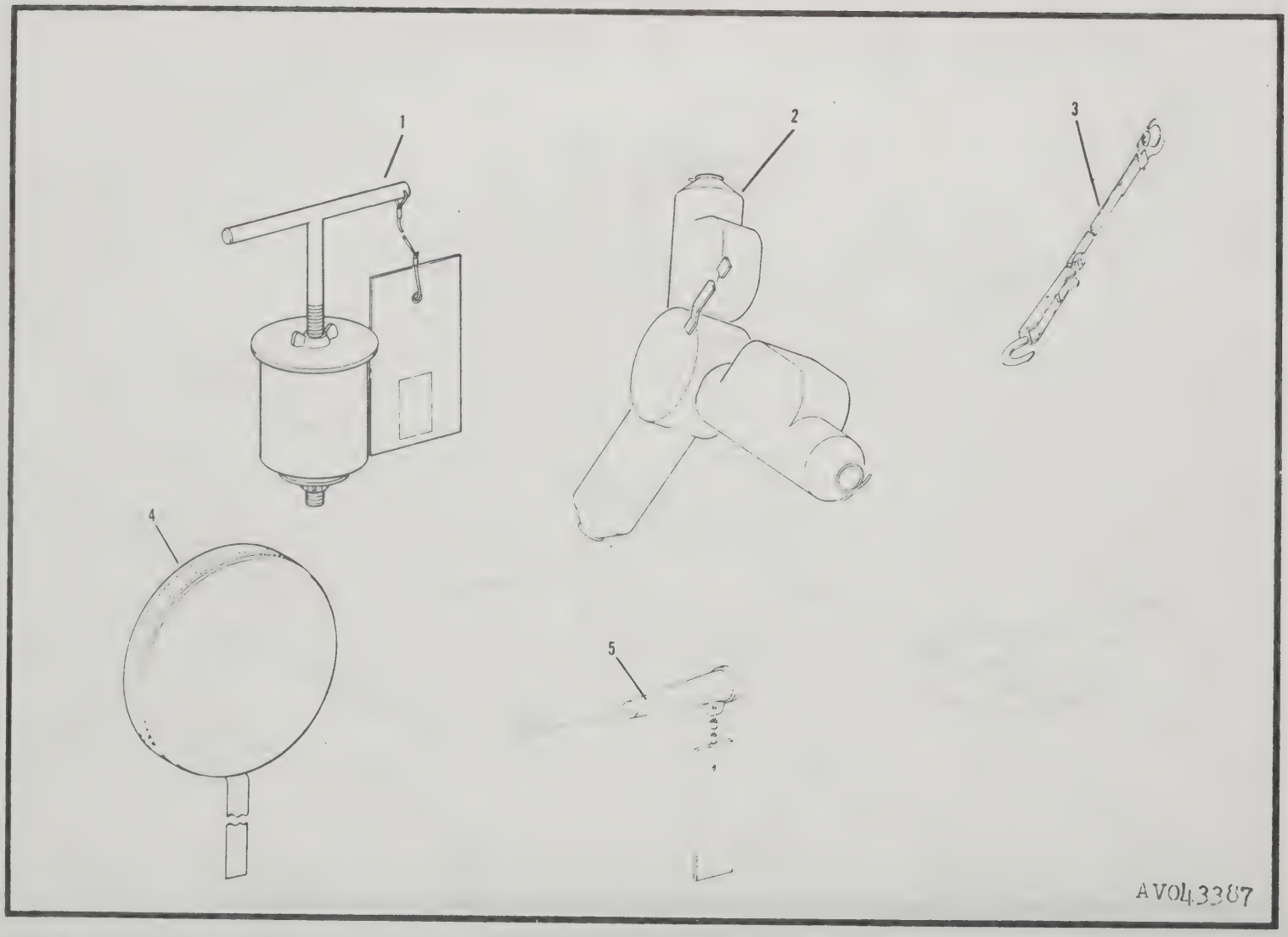

1978

Figure F4. Flyaway Items

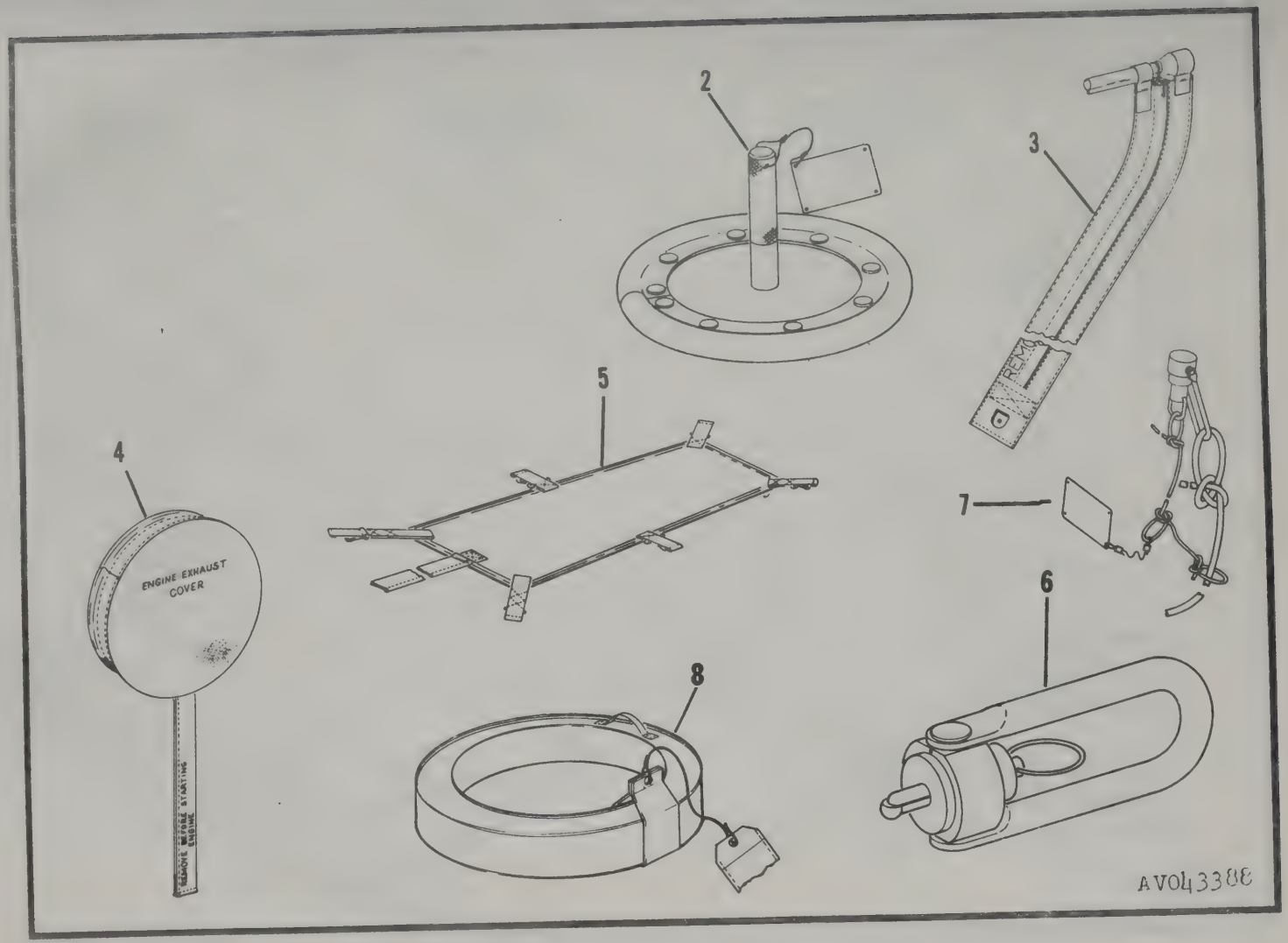

Figure F5. Flyaway Items

Figures F6 thru F9 not used

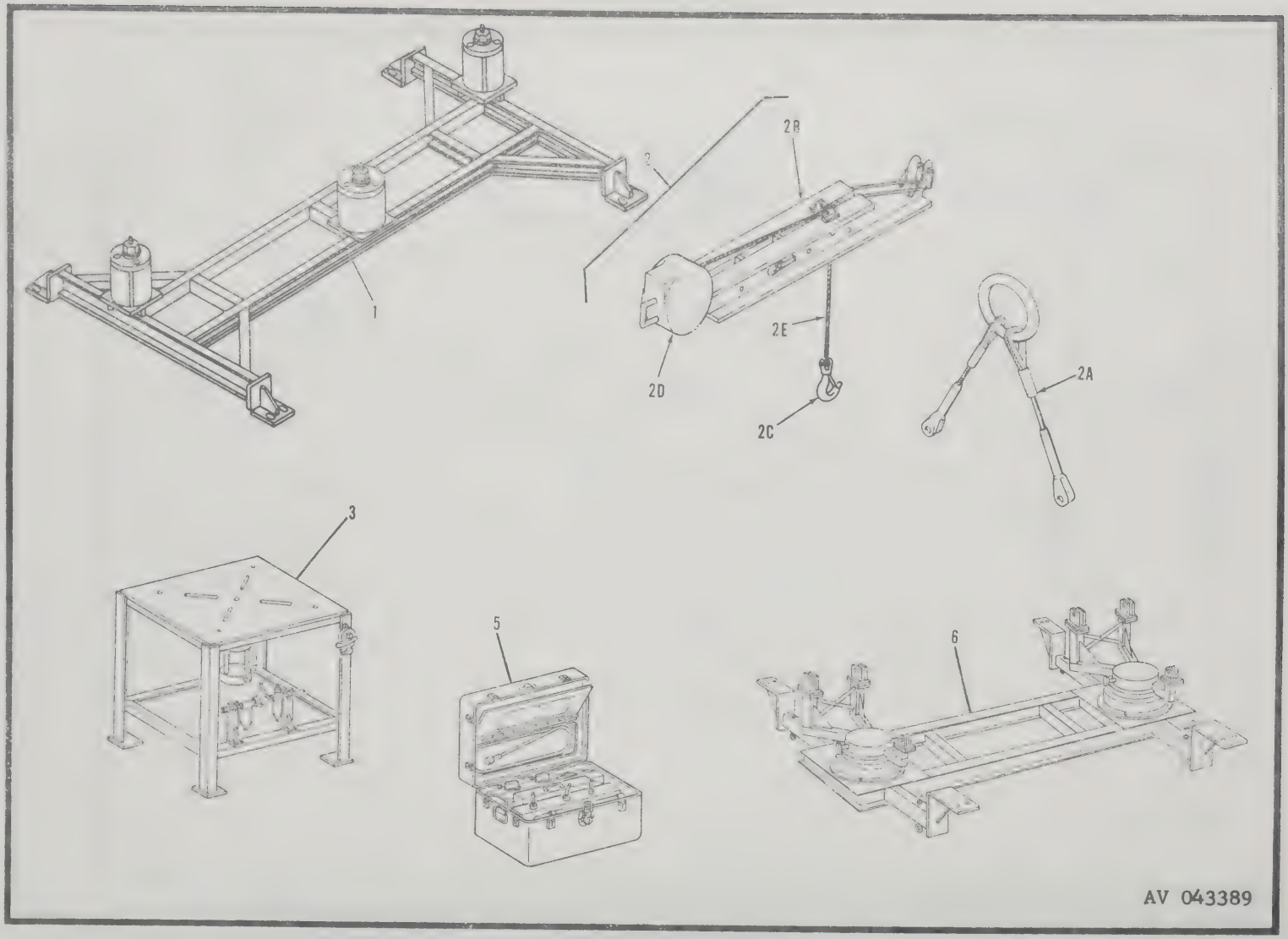

Figure F10. Ground Support Items

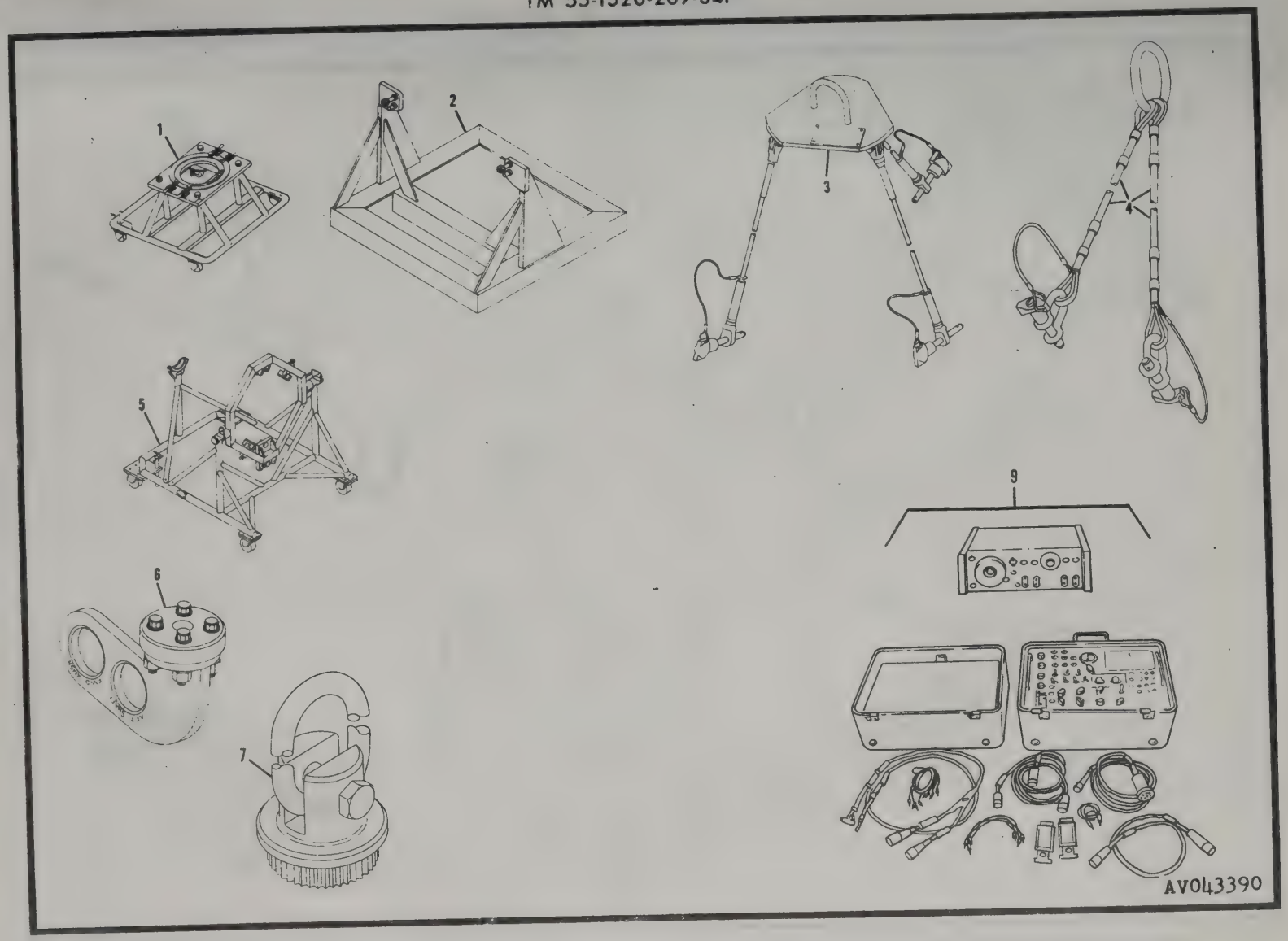

Figure F11. Ground Support Items

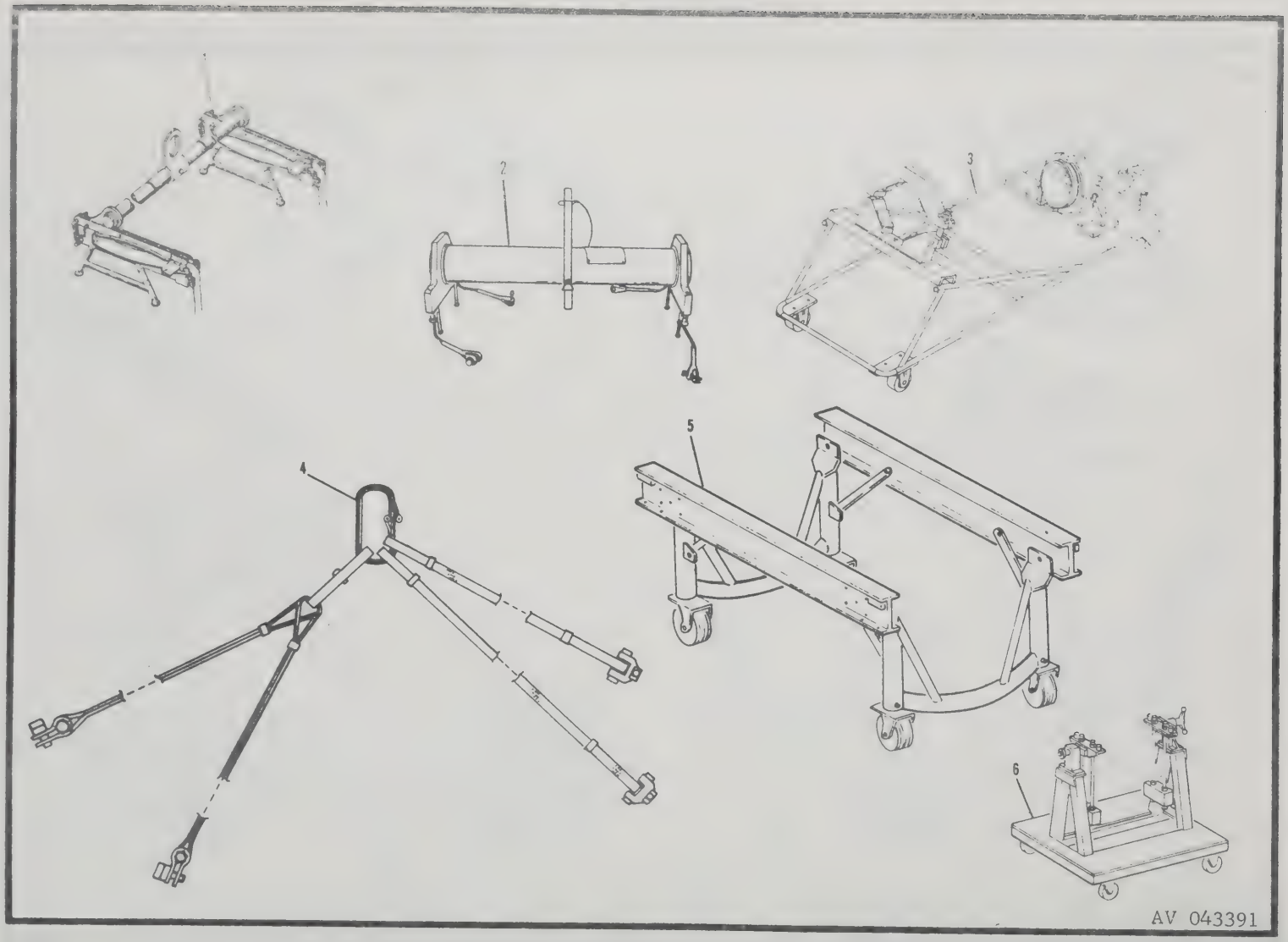

1982

Figure F12. Ground Support Items

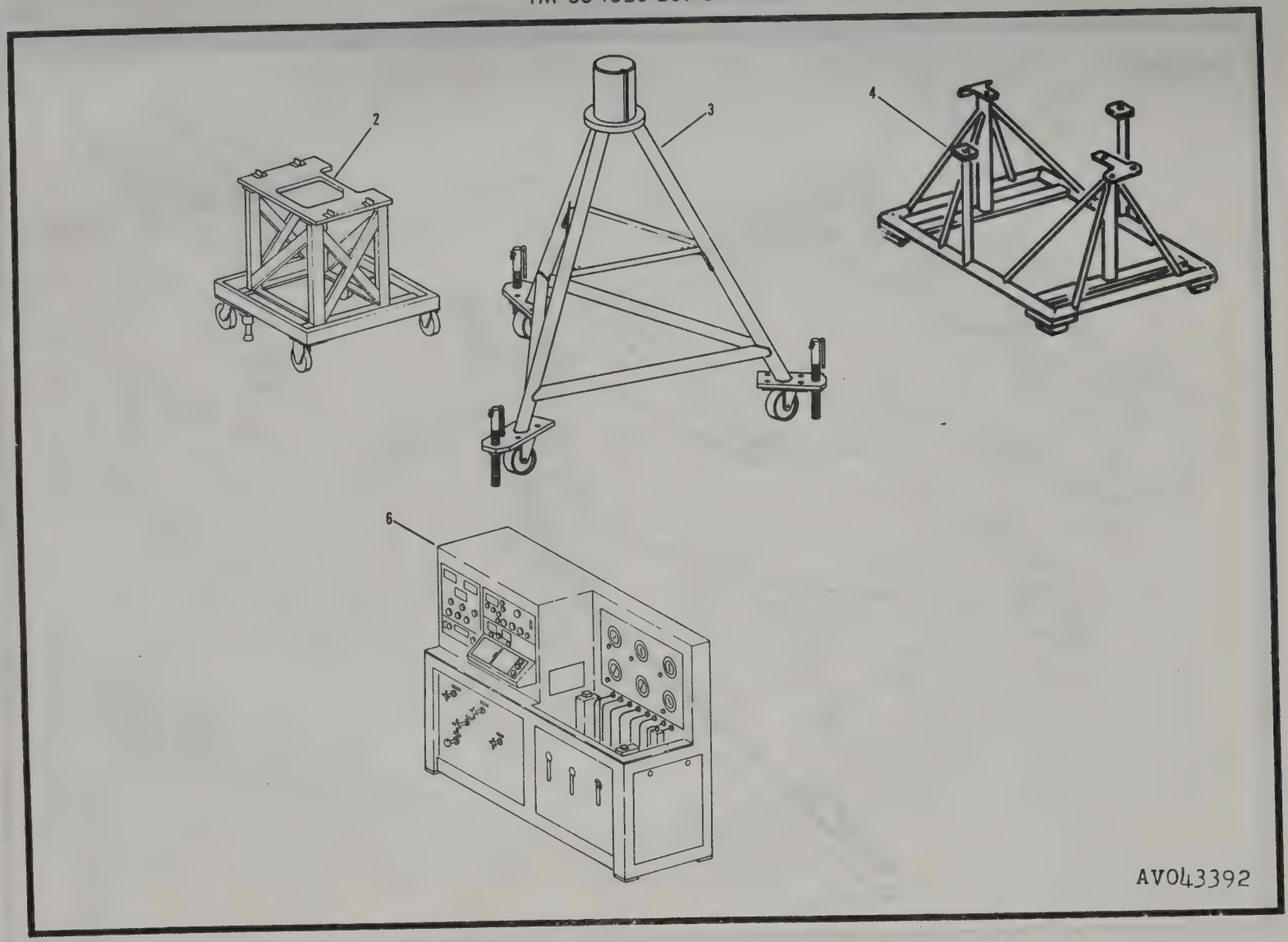

Figure F13. Ground Support Items

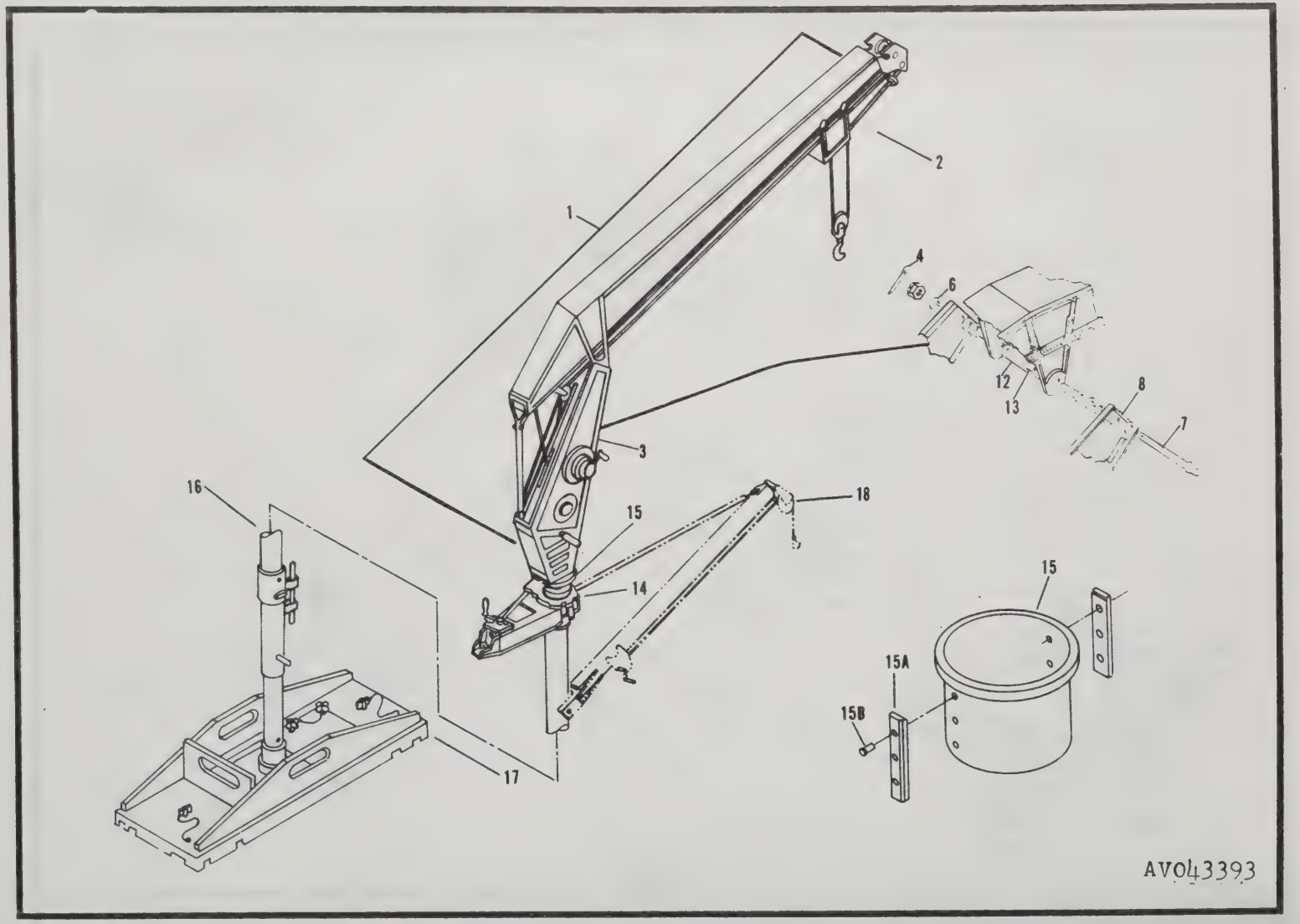

Figure F14. Ground Support Items

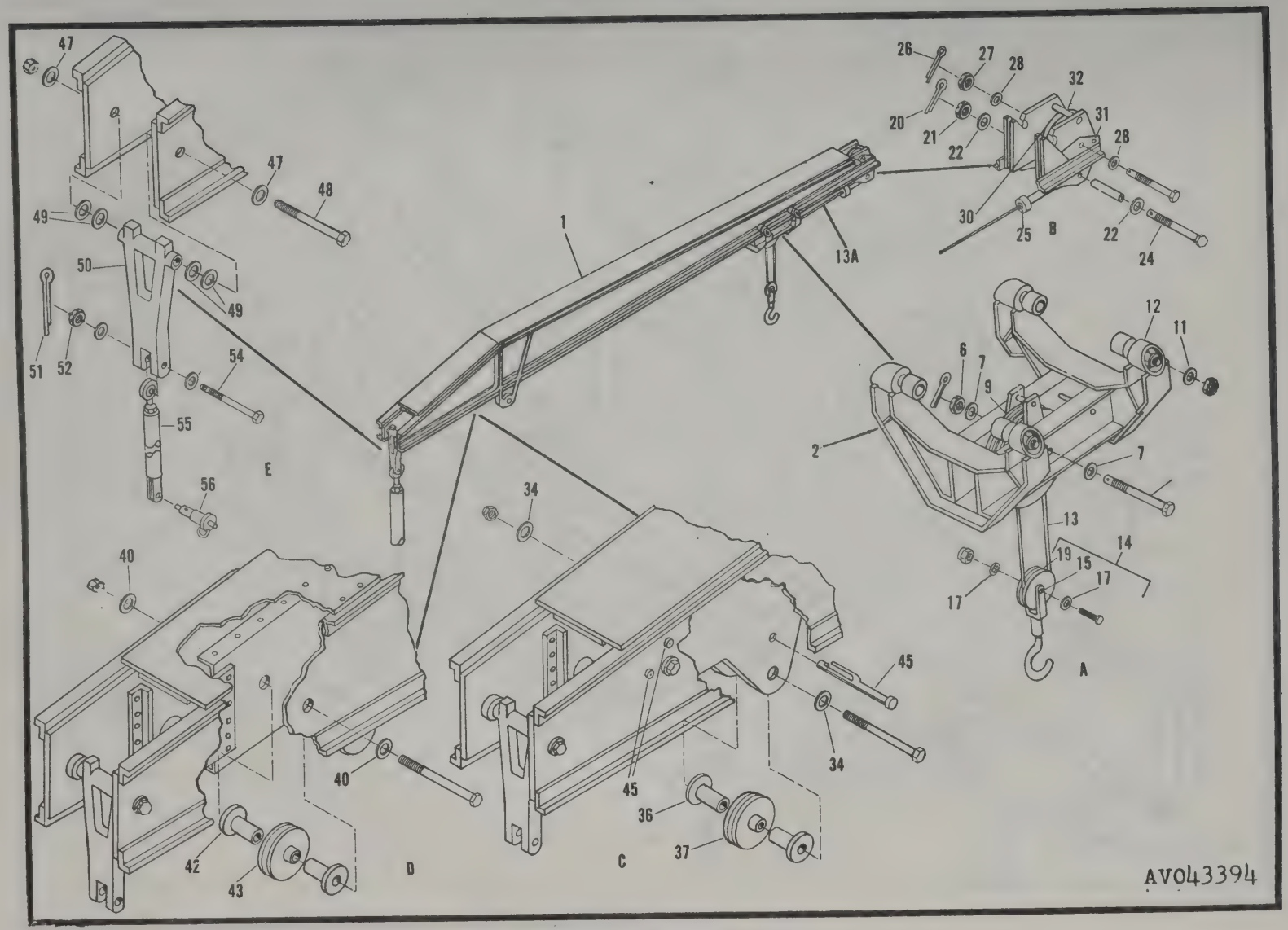

Figure F15. Ground Support Items

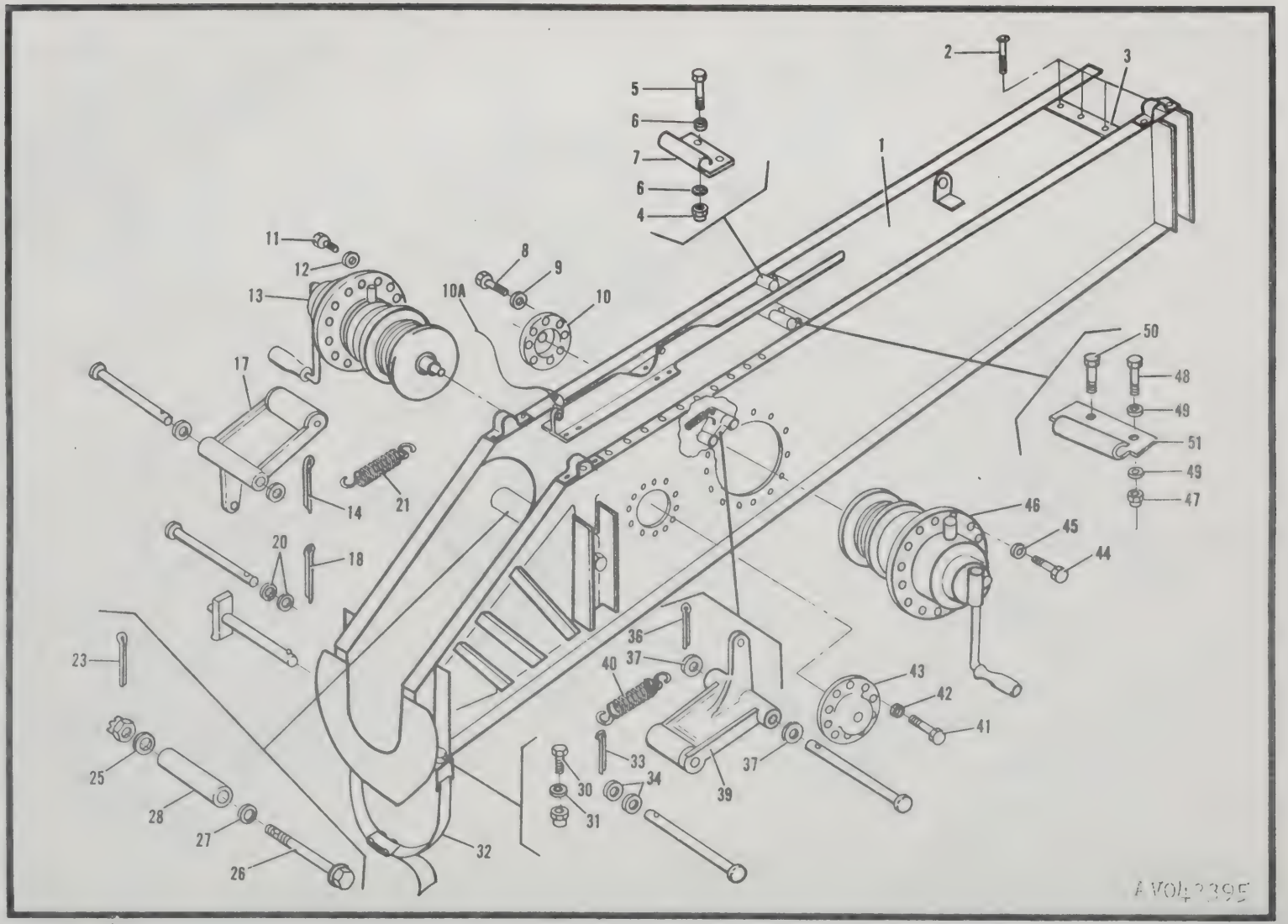

1986

Figure F16. Ground Support Items

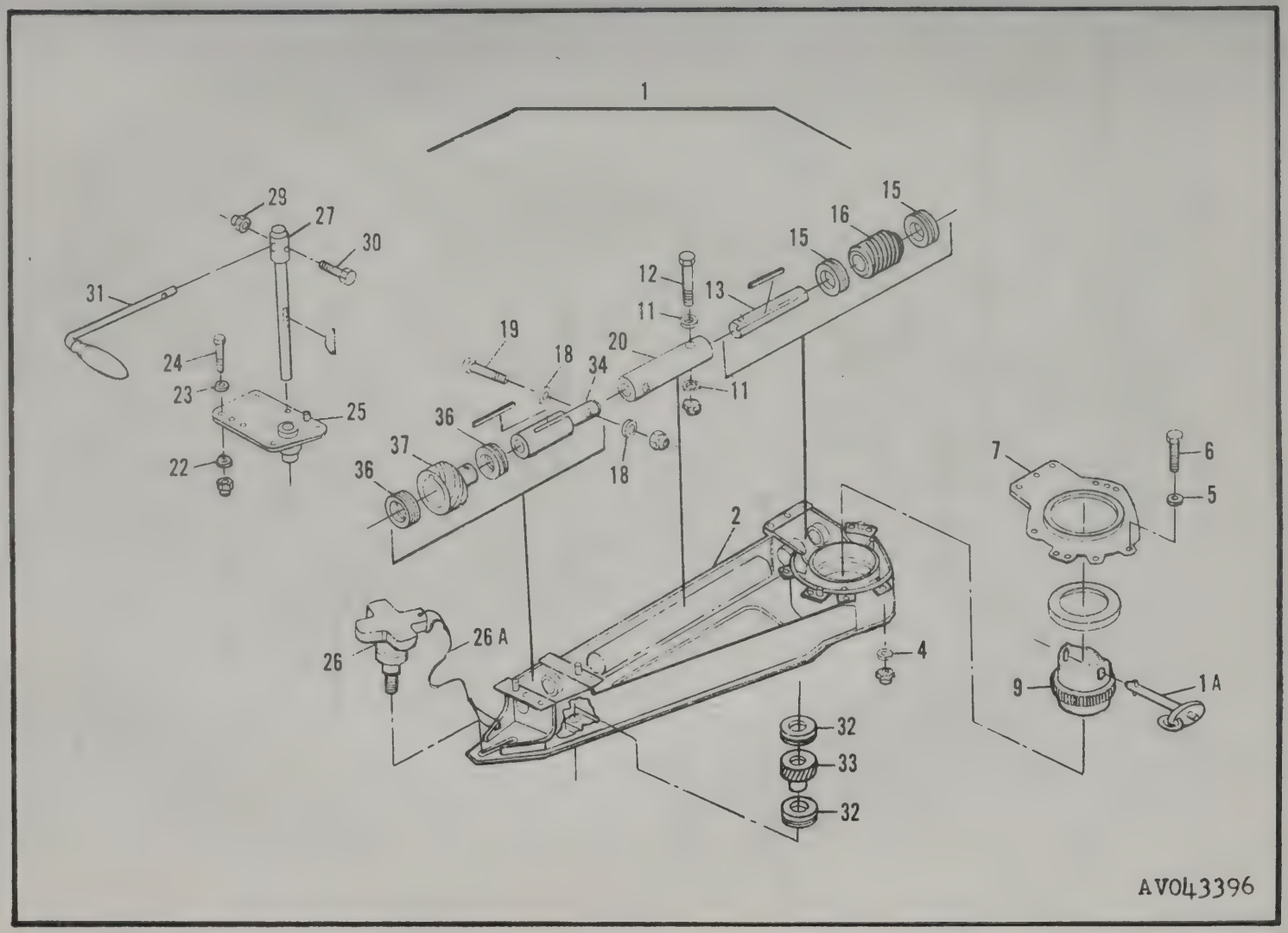

1987

Figure F17. Ground Support Items

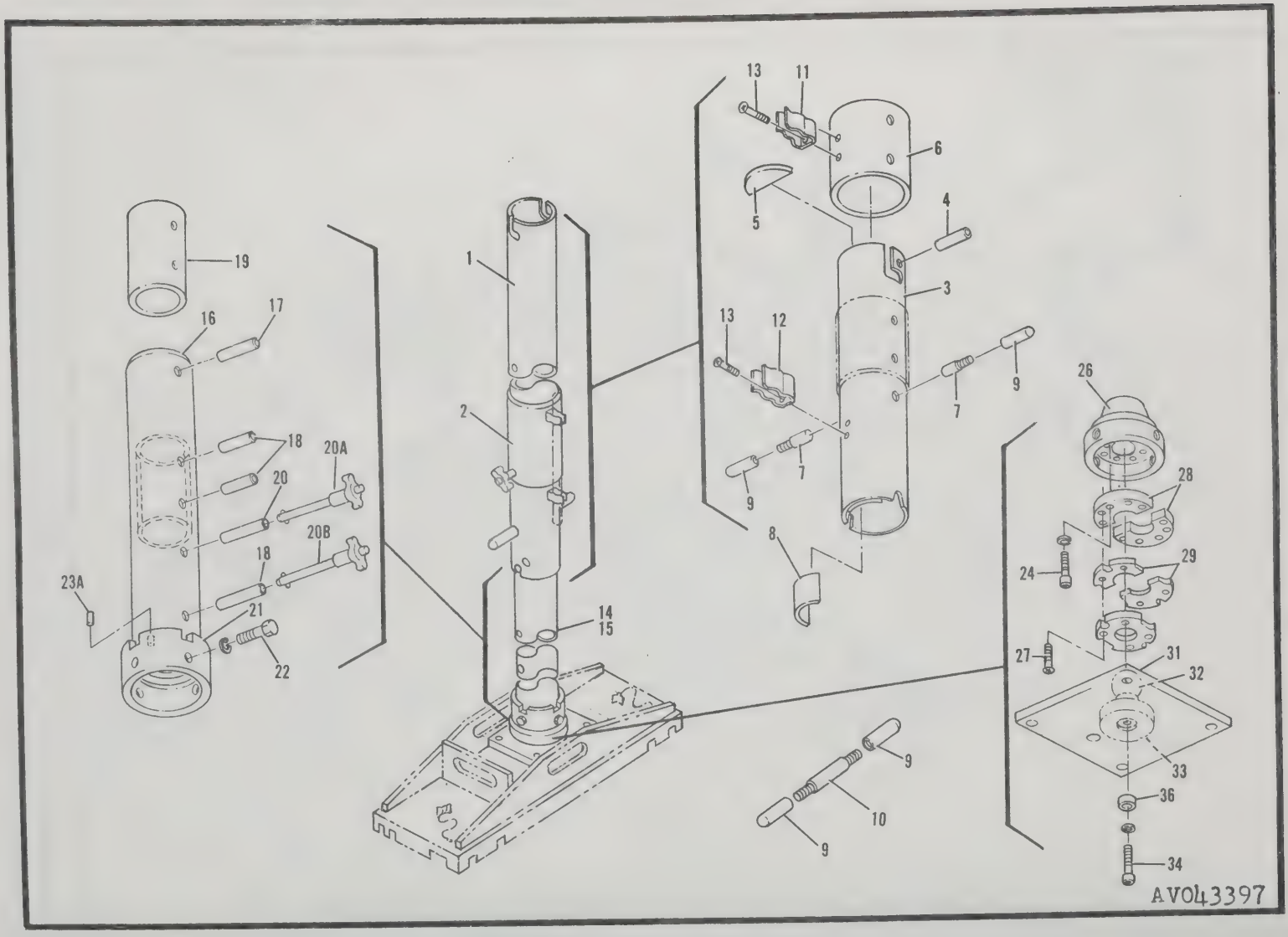

Figure F18. Ground Support Items

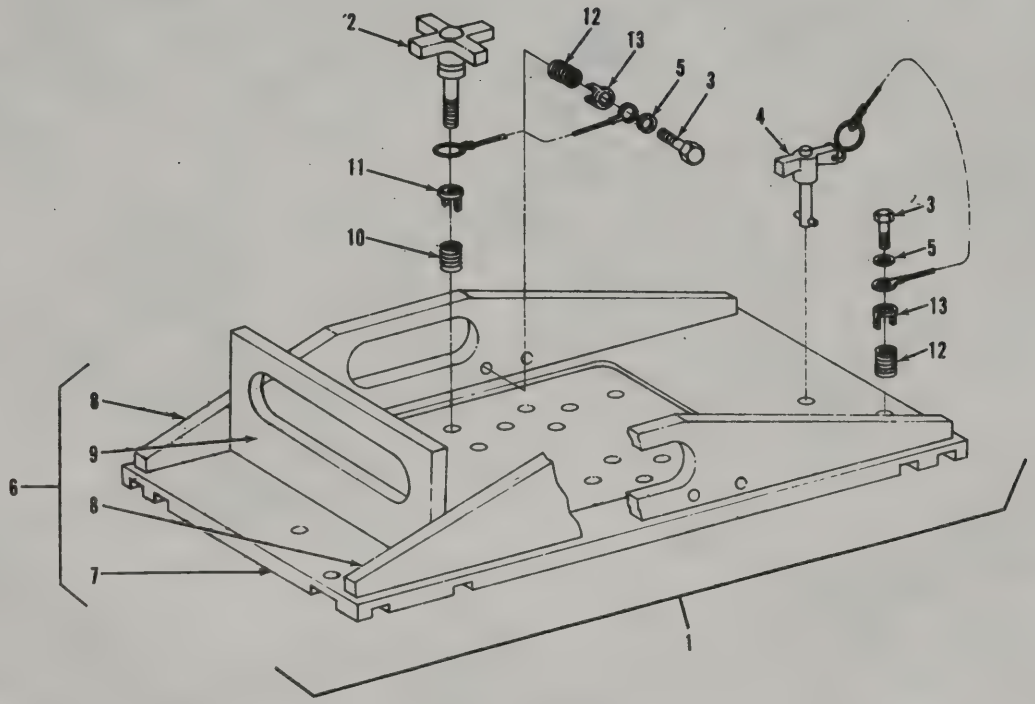

Figure F19. Ground Support Items

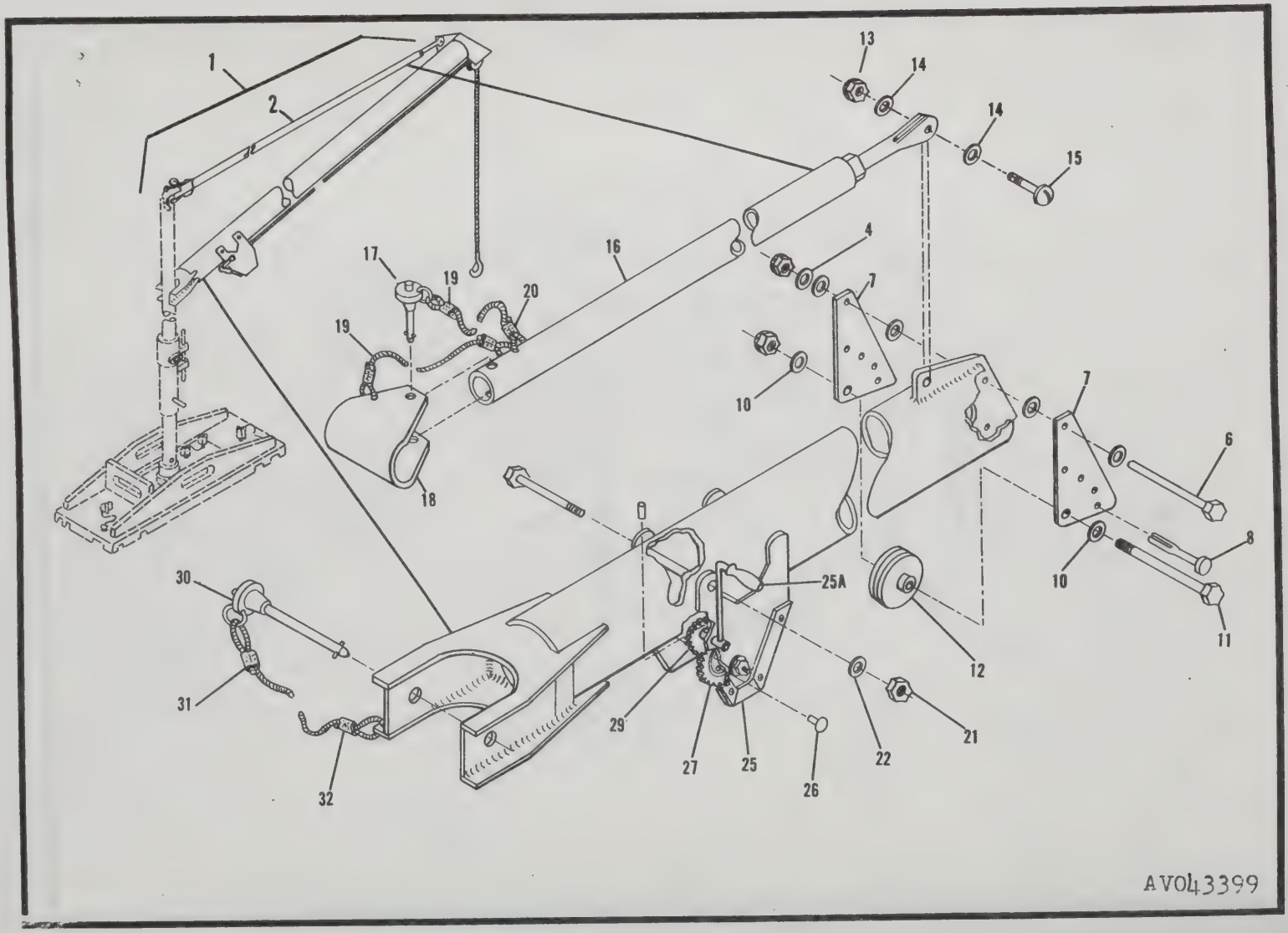

Figure F20. Ground Support Items

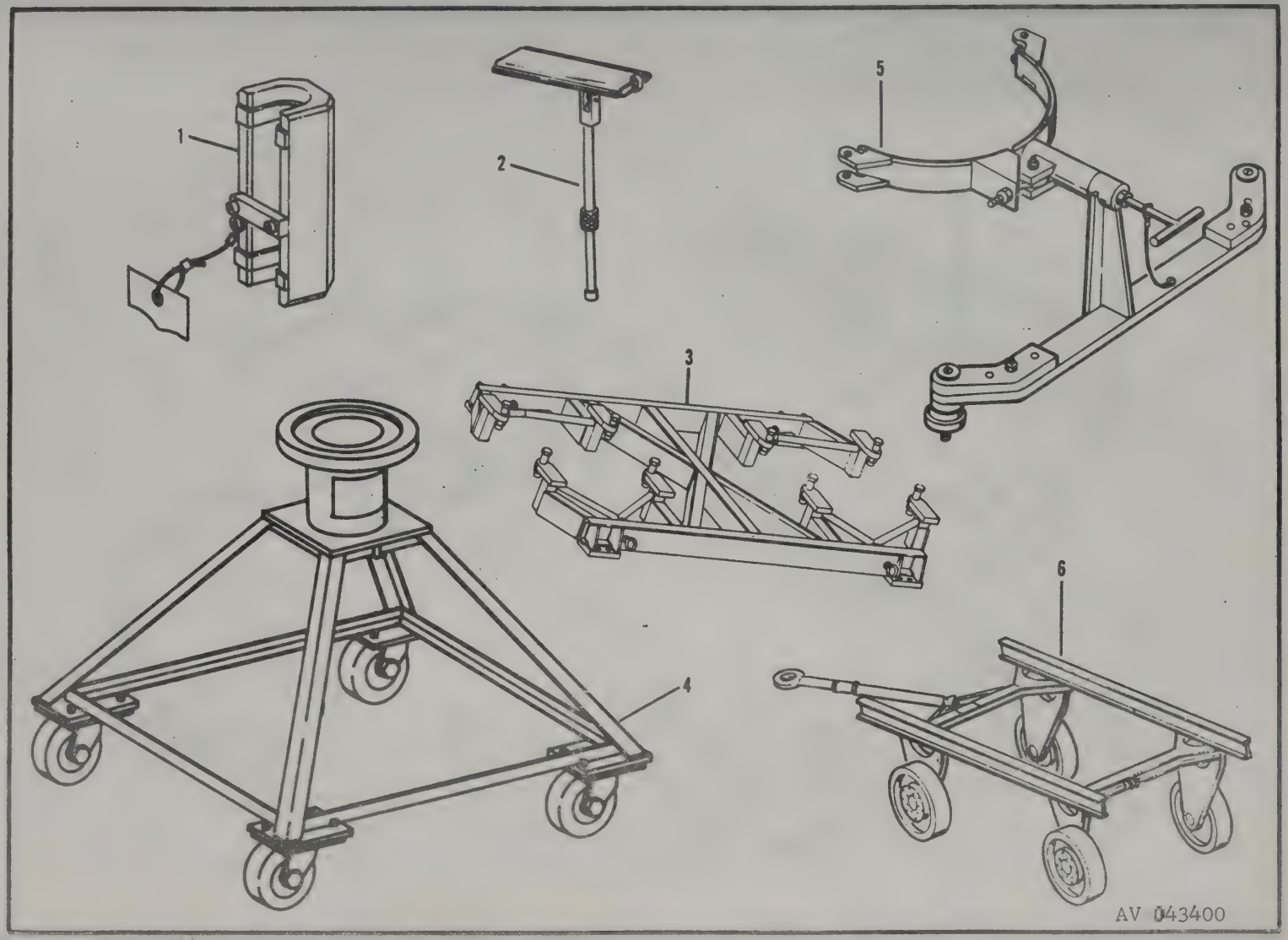

1991

Figure F21. Ground Support Items

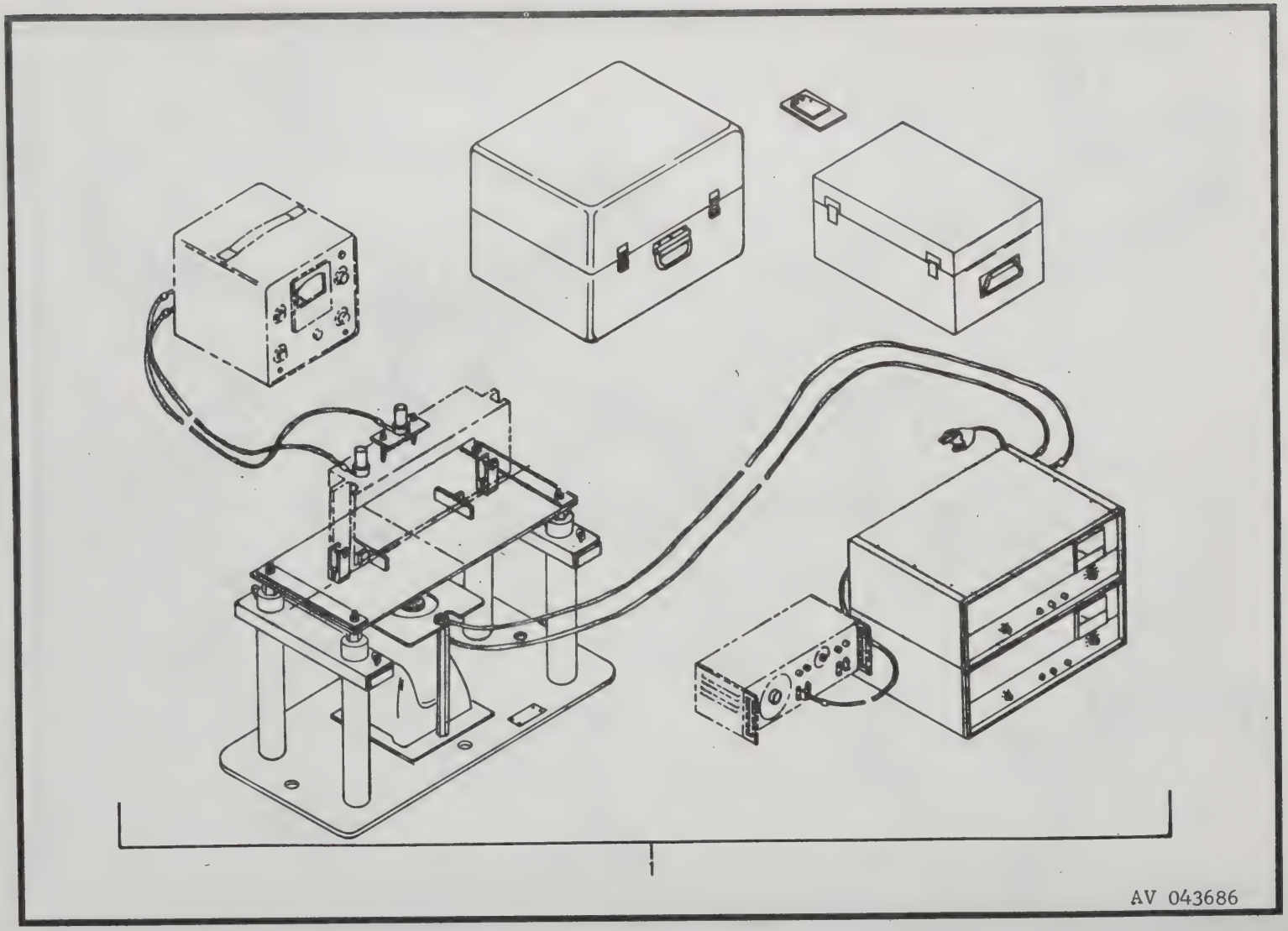

1992

Figure F22. Ground Support Items (Sheet 1 of 2)

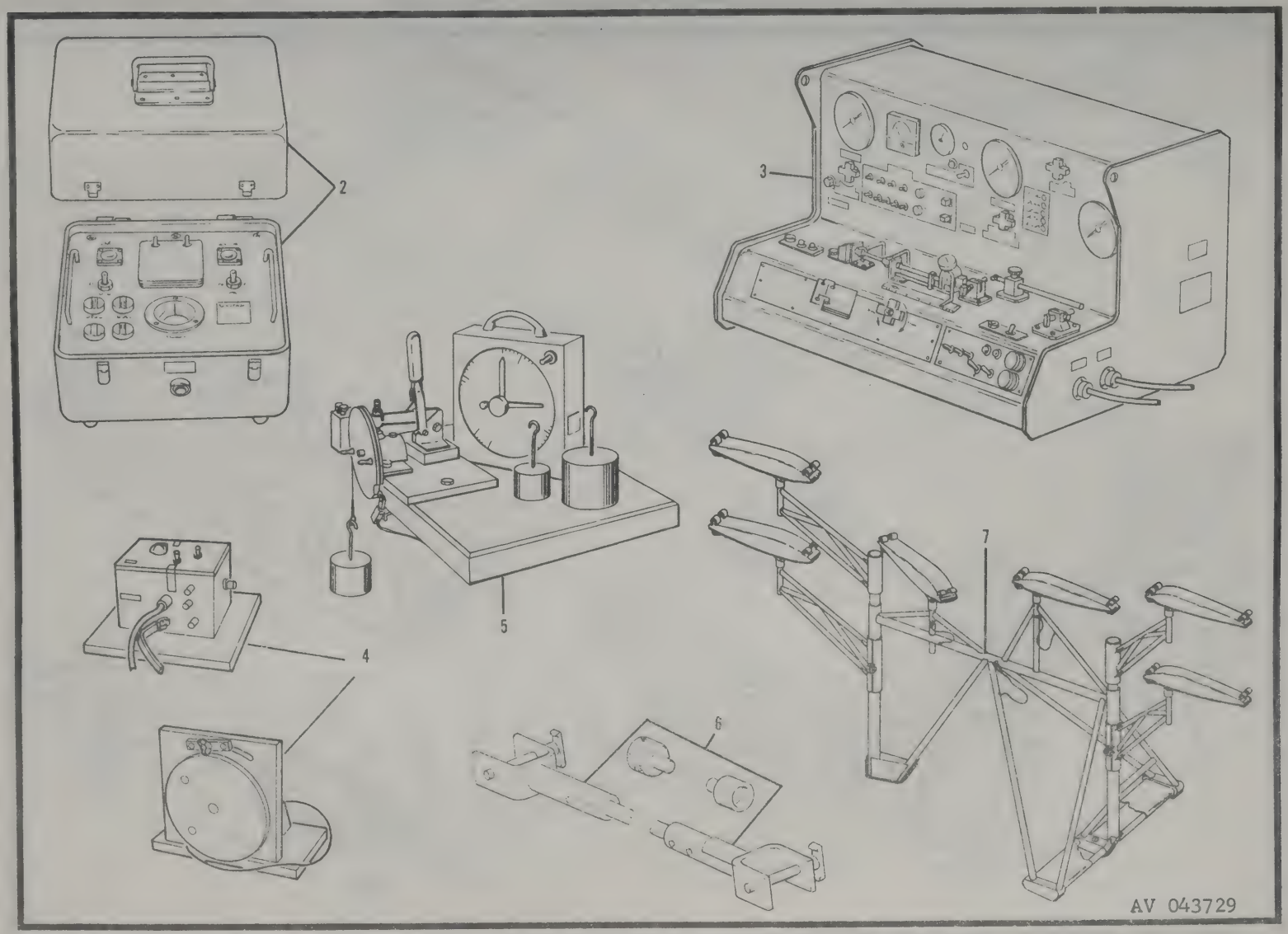

Figure F22. Ground Support Items (Sheet 2 of 2)

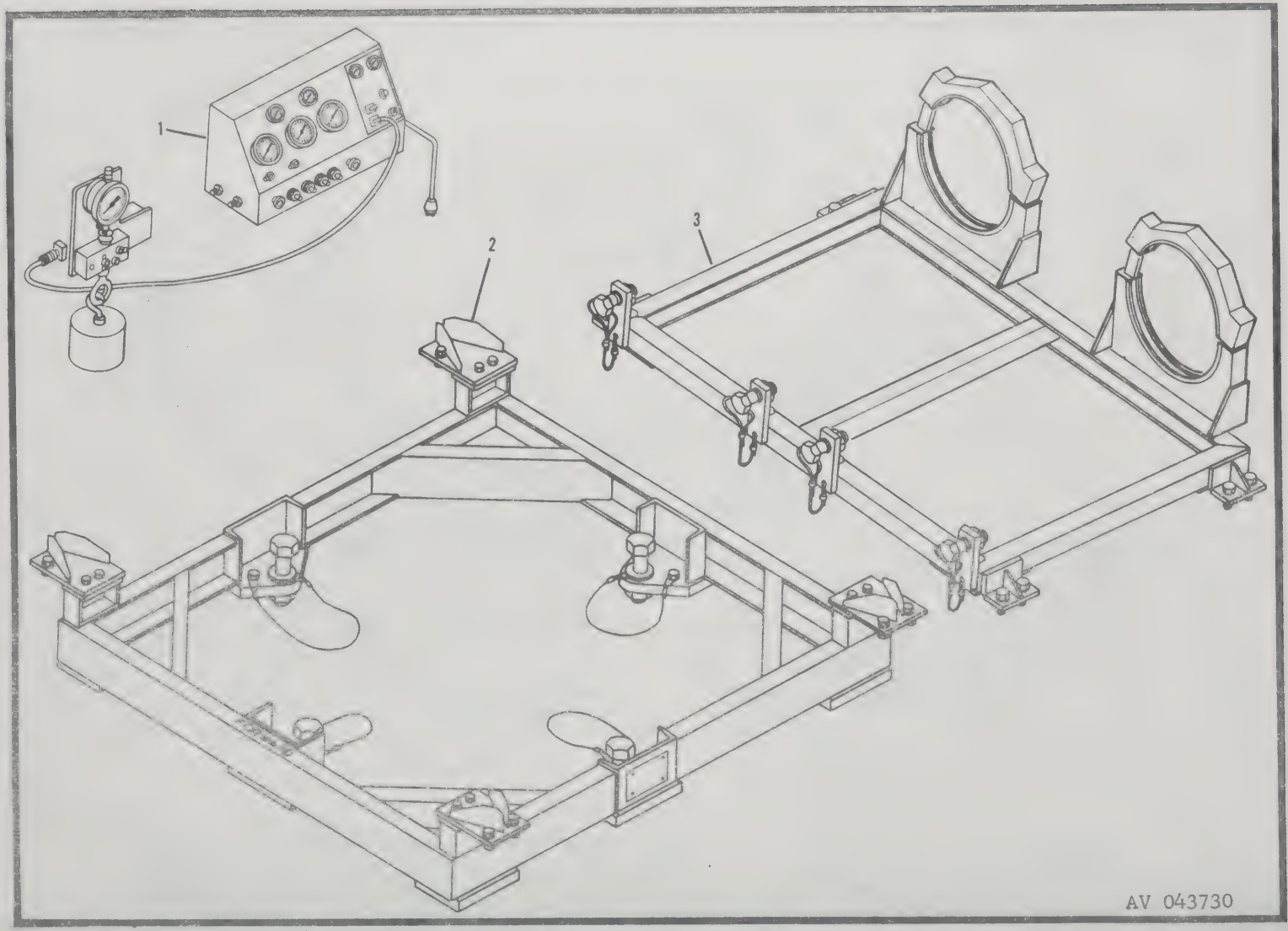

1994

Figure F23. Ground Support Items (Sheet 1 of 2)

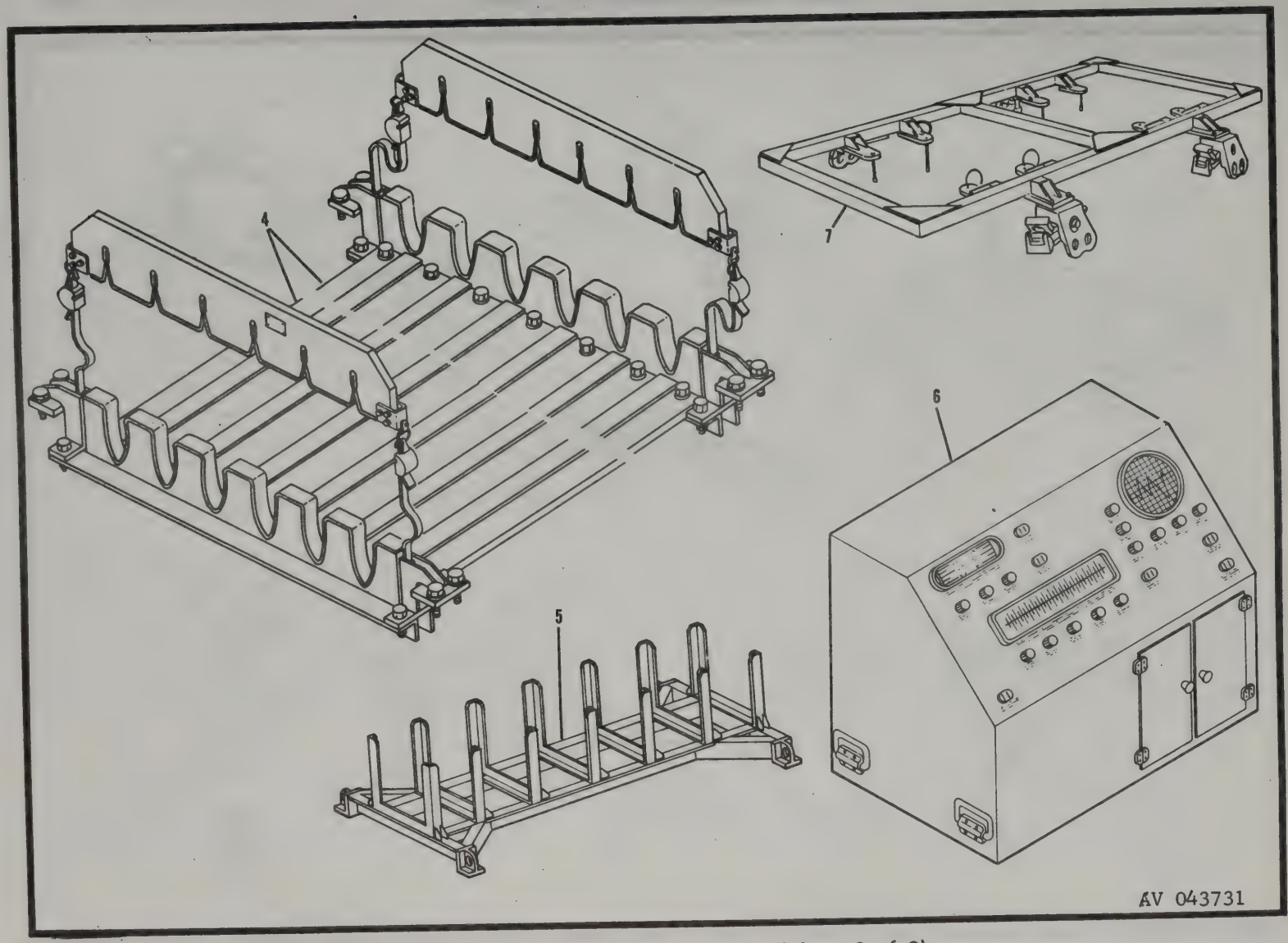

Figure F23. Ground Support Items (Sheet 2 of 2)

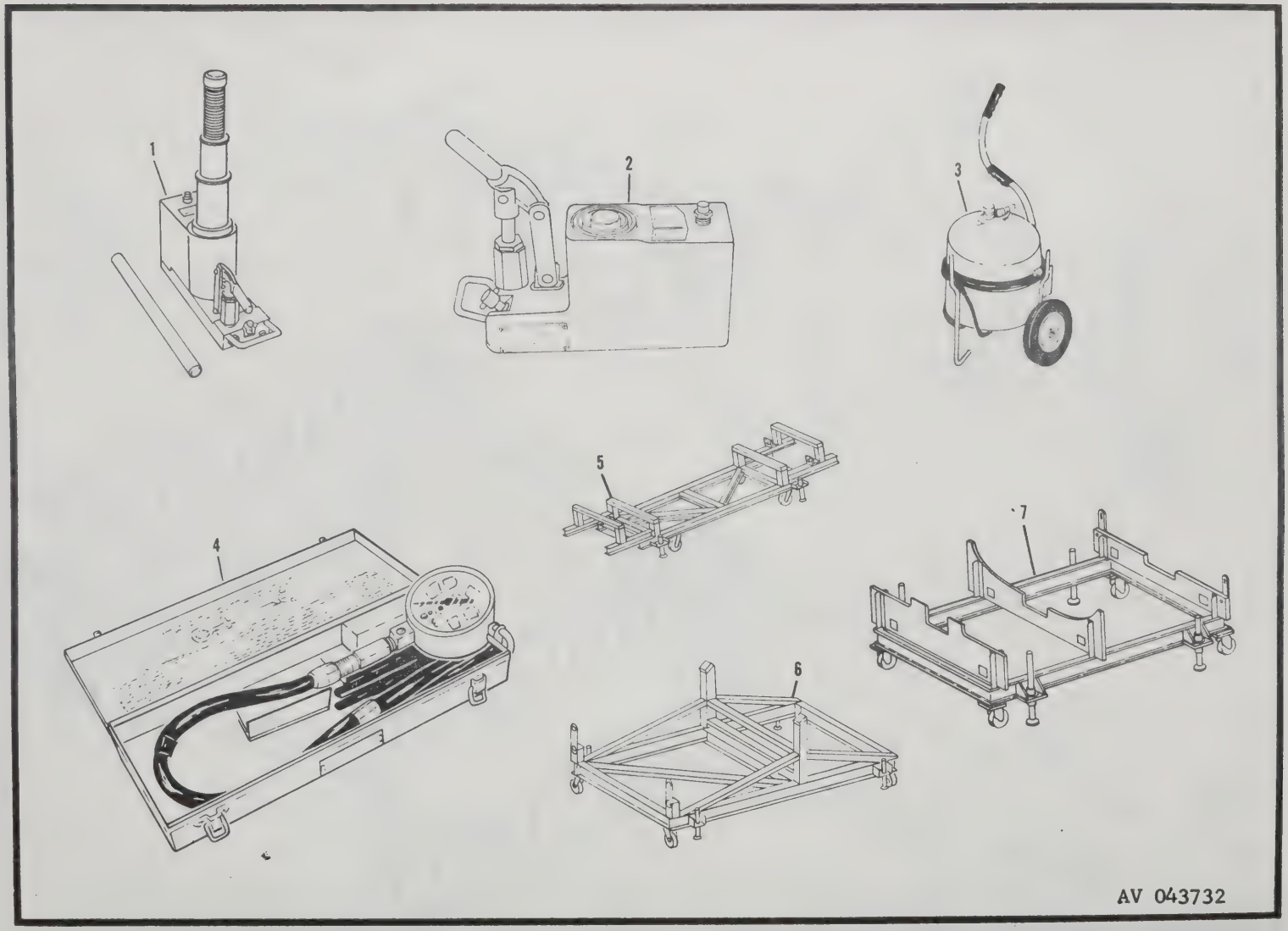

1996

Figure F24. Ground Support Items

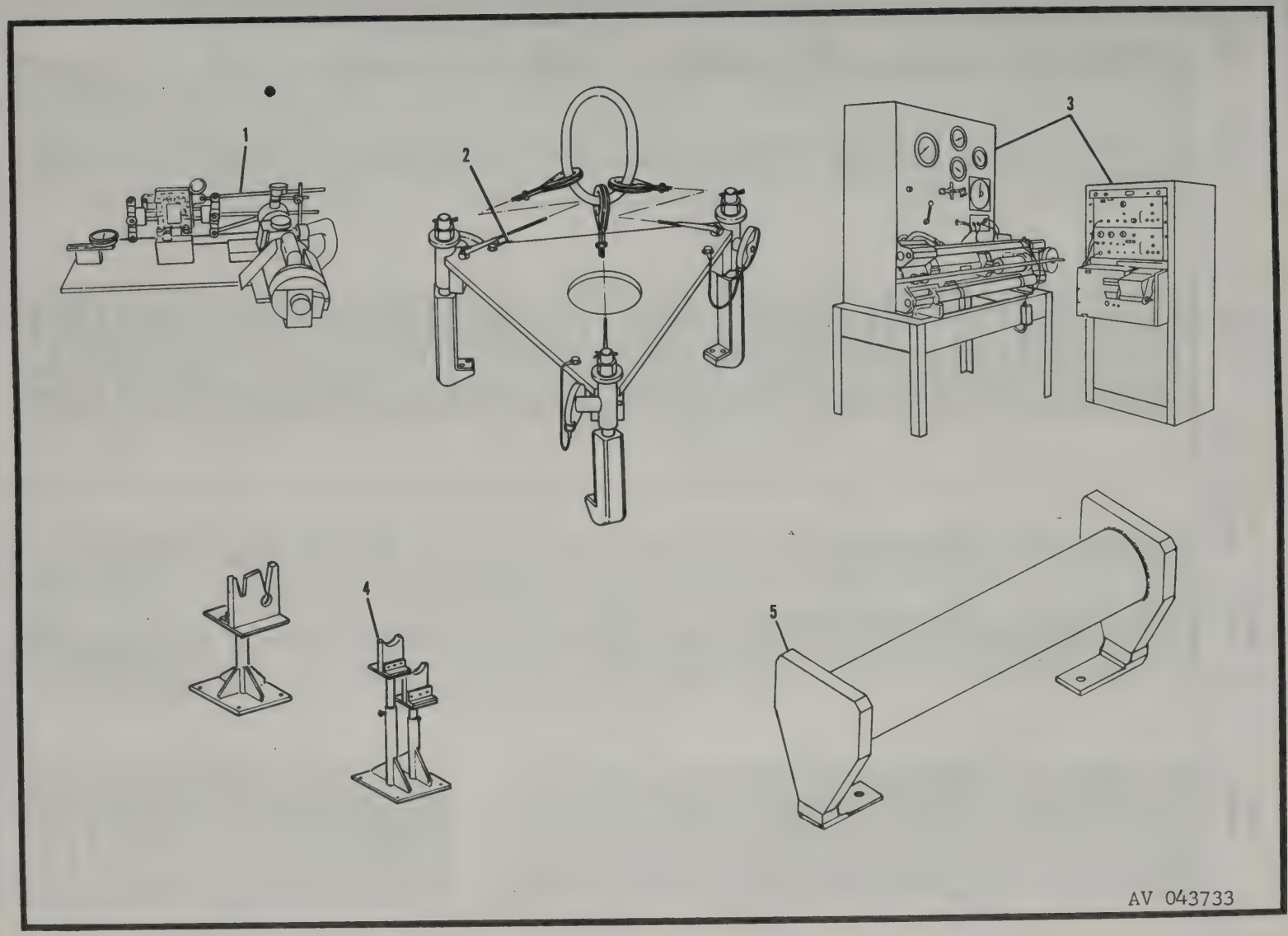

Figure F25. Ground Support Items

STOCK NUMBER	FIGURE NUMBER	ITEM NUMBER
1005-732-6283	138	46
1005-887-3089	63	130
1005-887-3097	138	
1005-939-8523	11A	107J
1220-157-4047	149	94
1377-756-1384	258	12A
1377-824-5858	258	12A
1377-930-9390	258	12A
1377-930-9390	258A	1
1377-987-7510	263	25
1377-999-7463	263	26B
1420-736-0388	267	54
1560-001-9348	11B	42
1560-004-8899	219A	105
1560-004-8899	219A	198
1560-004-8900	218	56
1560-010-5463	239	65
1560-010-5509	239	93
1560-011-8941	255	19
1560-012-4580	10	17
1560-012-4586	10	15
1560-012-4591	10	16
1560-012-4592	10	25
1560-012-4629	10	28
1560-012-4636	76	5
1560-012-4639	10	11
1560-012-8743	249	4
1560-012-8747	249	3
1560-014-0703	235	
1560-018-0096	211	53
1560-019-3052	76	44
1560-020-2604	20	88
1560-020-2605	20	88
1560-020-2606	20	102
1560-021-2743	279	6
1560-025-9075	116	40C
1560-025-9076	257	15D
1560-027-2963	255	19
1560-027-3008	20	42
1560-034-6090	32	
1560-042-3916	242	37
1560-044-2938	31	21
1560-044-2943	20	32
1560-052-4351	11B	
1560-055-1113	18	170
1560-055-1113	18	172
1560-055-1114	18	165C
1560-055-1115	18	162
1560-055-1116	11C	64D
1560-055-1117	83	252A
1560-055-5012	10	
1560-055-5012	10	31B
1560-055-6036	179	15A
1560-055-6036	179	32
1560-064-9198	62	48
1560-064-9204	62	48
1560-064-9205	QC1	149
1560-064-9206	QC1	149
1560-064-9207	33	44D
1560-064-9208	33	44D
1560-064-9209	62	28
1560-064-9209	QC1	17
1560-064-9210	62	28
1560-064-9210	QC1	17
1560-064-9212	16	
1560-064-9212	19	11
1560-064-9212	21	44
1560-065-0673	QC1	5
1560-065-0673	249	19
1560-065-0675	18	
1560-065-0675	18	93A
1560-065-0675	18	95A
1560-065-0675	18	99A
1560-065-0675	32	6
1560-065-5526	251	56
1560-065-5527	251	17
1560-065-5528	251	18
1560-066-1356	QC1	165
1560-066-1356	259	5
1560-066-5336	253	25
1560-066-5366	253	22
1560-066-5367	253	25
1560-066-5368	253	27
1560-066-5368	253	32
1560-066-5371	253	24
1560-066-5386	253	30
1560-066-5419	253	29
1560-069-3376	239	77
1560-069-6412	249	14
1560-070-6756	18	132B
1560-071-0852	18	
1560-071-0852	28	
1560-071-8752	32	3
1560-071-8753	32	3A
1560-071-8756	32	3B
1560-071-9236	211	53A
1560-071-9236	218	56A
1560-071-9236	219	51A
1560-071-9236	219	99
1560-071-9247	211	
1560-071-9247	218	
1560-071-9247	219	
1560-073-2184	178	29
1560-073-2185	178	19
1560-073-3993	90	15B
1560-073-3993	92	37E
1560-073-3993	92	91E
1560-073-5294	10	
1560-073-8692	218	16
1560-073-8692	219	63
1560-073-8692	219	9
1560-073-8762	220	9
1560-073-8762	221	71
1560-073-8800	213	57A
1560-073-8800	220	54
1560-074-9024	119	91
1560-074-9025	119	119
1560-074-9026	119	116
1560-074-9029	119	263
1560-074-9034	117	64
1560-075-1899	16	
1560-075-1900	16	
1560-075-4783	18	
1560-076-9055	11B	80
1560-076-9056	11B	81
1560-076-9797	11B	99A
1560-077-2475	32	2
1560-078-0754	18	
1560-078-2799	25	31
1560-078-2799	26	
1560-078-2821	11	142
1560-078-2821	42A	
1560-078-3448	21	94
1560-078-3451	21	93
1560-080-7882	129	46
1560-082-0501	42A	28
1560-083-2829	81	153
1560-083-2829	83	282

STOCK NUMBER	FIGURE NUMBER	ITEM NUMBER	STOCK NUMBER	FIGURE NUMBER	ITEM NUMBER
1560-086-3527	31	22	1560-106-5918	14	41
1560-087-5599	62	36	1560-106-8553	188	17
1560-087-5599	QC1	11	1560-107-1401	32	
1560-088-4955	191	27	1560-107-1450	28	
1560-095-3351	218		1560-107-1452	28	
1560-095-3354	218	12D	1560-107-1453	28	
1560-095-3354	218	8C	1560-107-4875	118	
1560-095-3354	219A	134	1560-107-7344	18	24
1560-095-3354	219A	36	1560-107-7344	18	24
1560-095-3356	218	8E	1560-107-8073	218	
1560-095-3356	219A	32	1560-107-8076	218	
1560-095-3357	219A	136	1560-107-8077	219A	129
1560-095-3357	219A	34	1560-107-8078	219A	129
1560-097-8483	257	4	1560-107-8079	219A	128
1560-100-4371	218	57	1560-107-8079	219A	24
1560-100-4373	218	59	1560-107-8081	219A	128
1560-100-4374	221		1560-107-8081	219A	24
1560-100-4377	221		1560-107-8082	219A	23
1560-100-4379	221		1560-107-8083	219A	23
1560-100-4382	221		1560-108-6350	219A	188
1560-102-8555	218	73	1560-108-6350	219A	96
1560-103-2381	41	33	1560-108-6353	255	19
1560-103-2386	39	9	1560-108-6354	255	19
1560-103-5873	218	74B	1560-110-4280	20	40
1560-103-5882	18	46A	1560-110-4281	20	40
1560-103-5883	18	46A	1560-110-4282	32	24
1560-103-5885	33	54	1560-110-4283	32	24
1560-103-5886	33	54	1560-110-4305	14	41
1560-103-5893	286	16	1560-111-0094	14	2
1560-103-5895	286	20	1560-111-0098	14	21
1560-103-9486	11	146	1560-111-0099	14	42
1560-103-9486	28	24S	1560-111-0100	14	
1560-103-9486	42B		1560-111-0101	13	95
1560-103-9487	42B	15	1560-111-0102	14	21
1560-103-9491	279	8	1560-111-6874	42B	83
1560-103-9505	42B	73A	1560-111-6875	42B	83
1560-103-9506	42B	56	1560-111-6933	18	
1560-103-9507	42B	67	1560-111-6934	13	94B
1560-103-9510	42B	65	1560-111-6947	18	
1560-103-9511	42B	81	1560-113-7857	28	
1560-103-9512	42B	66	1560-114-1198	33	34A
1560-103-9513	42B	60	1560-114-1203	11	38
1560-103-9524	286	23	1560-115-4946	11	16A
1560-103-9525	206	2	1560-115-4973	21	
1560-103-9526	206	1	1560-115-4974	21	
1560-103-9526	206	4	1560-115-4975	21	
1560-105-0533	42B	29	1560-115-4976	21	
			1560-116-0736	41	24
1560-105-3041	41	50	1560-116-0737	41	23
1560-105-3042	41	54	1560-116-0738	41	20
1560-105-3043	41	48	1560-116-0739	41	10
1560-105-3044	41	49	1560-116-0740	41	11
1560-105-3045	41	52	1560-116-0748	32	
1560-105-3046	41	27	1560-116-3567	18	
1560-105-3047	41	26	1560-116-7222	21	65B
1560-105-3048	41	19	1560-117-2765	13	67A
1560-105-3049	41	15	1560-117-2946	13	67A
1560-105-3050	41	13	1560-117-2947	13	16A
1560-105-3051	41	46	1560-117-3085	13	16A
1560-105-3052	41	46	1560-117-3144	13	40A
1560-105-3053	41	4	1560-117-3199	13	40A
1560-105-3054	41	9	1560-118-2209	18	
1560-105-3055	41	8	1560-118-8829	41	27
1560-105-3057	41	31	1560-119-1152	116	1A
1560-105-6288	11A	20	1560-119-4086	118	
1560-106-0078	42B	27	1560-119-4087	118	
1560-106-0086	11A	22	1560-119-4102	33	4A
1560-106-2378	11C	27	1560-121-1139	42A	22
1560-106-5850	18		1560-121-1139	42C	25
1560-106-5852	39	12	1560-122-5373	F3	1
1560-106-5903	11		1560-122-5376	21	6A

STOCK NUMBER	FIGURE NUMBER	ITEM NUMBER	STOCK NUMBER	FIGURE NUMBER	ITEM NUMBER
1560-122-5379	11A		1560-150-2710	18	97
1560-126-9129	11	123	1560-150-2710	275	14
1560-126-9156	42C	29	1560-151-5864	13	16C
1560-126-9157	42C	35	1560-152-3648	11A	15U
1560-128-7519	41	25	1560-157-5002	11A	15T
1560-129-6273	41	22	1560-161-0436	18	59A
1560-129-6274	41	14	1560-161-0437	18	59A
1560-129-6275	41	16	1560-162-5000	11B	
1560-129-6276	41	17	1560-163-2834	62	19
1560-129-6277	41	12	1560-163-5816	206	4
1560-129-6304	33		1560-164-3938	116	37
1560-129-6306	33		1560-164-3940	13	95
1560-131-6443	32		1560-164-3943	14	16
1560-131-6447	18	95	1560-164-4003	18	120
1560-131-6448	18	90	1560-164-4004	18	120
1560-131-6449	18	97	1560-168-5594	32	24
1560-133-1258	20	100	1560-168-5620	18	120
1560-133-1260	41	44	1560-168-5621	18	120
1560-133-1261	41	44	1560-168-5652	KITS	
1560-133-1262	41	39	1560-168-5709	32	68
1560-133-1266	13	16A	1560-168-5725	18	91E
1560-133-1267	13	16A	1560-168-5725	18	98E
1560-133-3385	41	18	1560-168-5725	275	14E
1560-133-3393	39	4	1560-168-5732	21	97H
1560-133-4136	11B		1560-168-5733	21	97H
1560-133-4141	21	78	1560-168-5790	31	4
1560-133-6061	41	28	1560-168-5792	31	4
1560-133-6168	13	16A	1560-168-5817	31	4
1560-133-6169	13	67A	1560-168-5818	31	4
1560-133-6170	13	40A	1560-168-5819	31	10
1560-133-6171	13	40A	1560-168-5842	32	45
1560-133-6172	13	67A	1560-168-5843	32	69
1560-133-6180	13	16A	1560-168-5852	14	16
1560-133-6891	32	59	1560-168-5869	33	
1560-133-6892	32	59	1560-168-5870	33	
1560-133-6893	32	59	1560-168-5870	62	8
1560-133-6894	32	59	1560-168-5870	QC1	1A
1560-133-6895	32	69	1560-168-5901	279	5
1560-133-6897	32	45	1560-168-5906	279	1
1560-133-6898	32	45	1560-168-5943	18	101
1560-133-6975	11C	62A	1560-168-5972	11B	
1560-133-7027	11A	16	1560-168-5973	11B	
1560-133-7043	11B	42	1560-168-5974	11B	
1560-133-7157	28	20	1560-168-5975	41	30
1560-133-7158	28	21	1560-168-5976	41	29
1560-133-8376	11		1560-168-5995	244	
1560-135-0371	28		1560-168-5996	244	
1560-135-0372	28		1560-168-5997	244	
1560-135-0568	20	96	1560-168-5998	243	9D
1560-135-0570	218	3	1560-168-5999	243	
1560-136-2398	14	52	1560-168-6000	244	
1560-137-2375	13	94E	1560-168-6001	243	
1560-137-2376	13	94E	1560-169-0468	14	15
1560-141-7016	183	3A	1560-169-0469	14	2
1560-141-7017	183	58	1560-169-0488	14	16
1560-141-7019	183	57	1560-169-0496	11A	110
1560-141-7023	183	58	1560-169-0497	11A	111
1560-141-7026	183	8	1560-169-0498	11A	112
1560-141-7027	183	2	1560-169-0539	18	168
1560-141-7028	183	49	1560-169-0687	32	
1560-141-7028	183	62	1560-169-0938	21	78
1560-146-1340	31		1560-169-1900	11B	
1560-146-1341	11A	105B	1560-169-6101	62	21
1560-146-1342	11A	105B	1560-169-6101	QC1	185
1560-146-1343	18	168	1560-169-6958	280	15
1560-149-7180	31	10A	1560-176-0190	31	
1560-149-7189	31	10A	1560-176-0191	31	
1560-149-7191	208	35A	1560-176-1136	14	15
1560-150-2707	18	95	1560-176-1153	14	2
1560-150-2708	18	90	1560-176-1212	20	
1560-150-2709	18	101	1560-176-1215	32	

STOCK NUMBER	FIGURE NUMBER	ITEM NUMBER	STOCK NUMBER	FIGURE NUMBER	ITEM NUMBER
1560-176-1254	20	14	1560-246-4844	32	
1560-176-1391	271	22A	1560-251-8733	294	16
1560-176-1394	21	90A	1560-251-8734	294	8
1560-176-1395	21	83A	1560-251-8735	294	5
1560-176-1397	21	32	1560-251-8736	294	6
1560-176-1400	21		1560-251-8737	294	7
1560-176-1402	21		1560-251-8740	294	9
1560-176-1403	21	31	1560-251-8742	294	14
1560-176-1404	21	35	1560-251-8743	294	13
1560-176-1405	21	34	1560-251-8744	294	11
1560-176-1406	21	33	1560-251-8749	294	12
1560-176-1407	21	36	1560-251-8751	10	42
1560-176-1408	21	83B	1560-251-8752	11A	47
1560-176-1410	21		1560-251-8754	189A	82
1560-176-1433	11C	4A	1560-251-8755	189A	38
1560-176-1628	41	1	1560-253-1732	10	42
1560-176-2481	32	13	1560-253-1733	11A	31
1560-177-3974	32	66	1560-253-1736	10	30
1560-177-3982	32	29	1560-253-1737	10	31
1560-177-3983	32	28	1560-254-6634	294	17
1560-177-4133	33		1560-254-6636	294	18
1560-177-4133	62	8	1560-254-6637	294	19
1560-179-0398	11A	7	1560-254-6638	294	15
1560-179-0399	11A	8	1560-254-6640	11A	23
1560-179-0400	11A	7	1560-254-6649	11A	23A
1560-179-0761	11C	4A	1560-254-6649	11B	56
1560-179-1175	283		1560-254-6650	11A	21A
1560-179-1387	21		1560-254-6650	11B	55
1560-179-6572	40	10	1560-254-6654	11A	21
1560-179-6572	40	12	1560-254-6658	11A	60A
1560-179-6572	40	23	1560-254-6658	11A	62A
1560-179-6572	40	27	1560-254-6658	11B	49
1560-179-6572	40	39	1560-254-6661	11A	62
1560-179-6572	40	6	1560-254-6662	11A	60
1560-179-6599	14	16	1560-270-6613	14	16
1560-179-6600	14	7	1560-270-6616	14	21
1560-179-6601	14	7	1560-270-6617	14	21
1560-181-3398	11	102A	1560-270-6619	13	96
1560-181-3758	51	85	1560-270-6620	14	16
1560-181-3937	11B	19	1560-270-6621	14	21
1560-181-5002	14	52	1560-270-6626	13	95
1560-181-5539	95	118	1560-270-6629	14	2
1560-181-5540	95	116	1560-270-6630	14	2
1560-182-9665	33	54	1560-270-6631	14	7
1560-182-9666	33	54	1560-270-6632	14	2
1560-183-7741	32		1560-270-6633	14	37C
1560-192-6869	11	125A	1560-270-6635	14	37C
1560-194-4889	31	4	1560-270-6636	219A	167
1560-194-4891	31	4	1560-270-6636	219A	62
1560-200-7626	69	32	1560-270-6638	219A	167
1560-216-5917	42B	83	1560-270-6638	219A	62
1560-216-5921	42B	83			
1560-225-0262	28	20	1560-283-9817	14	7
1560-226-2728	219	1			
1560-226-2729	219	1	1560-320-4512	211	53B
1560-226-2740	20	36A	1560-320-4512	218	56B
1560-227-6443	KITS		1560-320-4512	219	100
1560-229-6736	11	4	1560-320-4512	219	51B
1560-237-5464	219	1	1560-329-8422	119	166
1560-237-5464	219	52	1560-329-8423	119	168
1560-237-5465	219	1	1560-350-6263	279	5
1560-237-5465	219	52	1560-350-6286	279	1
1560-237-5651	218	19	1560-350-6286	279	3
1560-237-5651	219	12	1560-350-6287	279	3
1560-237-5651	219	60	1560-360-5080	219A	129
1560-241-5328	42B	56	1560-360-5081	219A	23
1560-241-5336	11	146	1560-360-5082	219A	23
1560-241-5336	28	24S	1560-360-5084	219A	128
1560-241-5336	42B		1560-360-5084	219A	24
1560-246-4771	11B	11	1560-360-5089	219A	128
1560-246-4843	32		1560-360-5089	219A	24

STOCK NUMBER	FIGURE NUMBER	ITEM NUMBER
1560-360-5090	218	
1560-360-5092	218	
1560-360-5094	218	
1560-360-5096	218	
1560-361-0866	223	242
1560-361-0907	223	226
1560-361-0908	223	238
1560-364-0124	223	245
1560-364-0793	13	16A
1560-364-0796	13	16A
1560-364-0797	13	16A
1560-364-0798	13	16A
1560-366-9982	219A	129
1560-402-9685	279	4
1560-403-1153	31	10A
1560-403-1154	31	10A
1560-403-1155	31	10
1560-403-7043	11	134
1560-403-7043	11A	20A
1560-403-7044	11	135
1560-403-7044	11A	22A
1560-403-7916	11B	
1560-403-7917	11B	
1560-404-3376	294	10
1560-404-7649	13	27
1560-404-7649	13	56
1560-404-7649	13	78
1560-404-7650	13	18
1560-404-7650	13	69
1560-404-7651	13	28
1560-404-7651	13	57
1560-404-7651	13	79
1560-409-4100	11C	26E
1560-409-4101	21	
1560-410-4638	13	42
1560-411-4125	13	55A
1560-411-4126	13	49A
1560-414-7117	32	12
1560-418-1794	32	
1560-420-0939	62	
1560-420-5223	11A	1
1560-420-7867	KITS	
1560-420-7872	28	24
1560-420-7873	28	23
1560-421-1327	279	1
1560-434-4772	32	
1560-435-4818	178	108
1560-435-7913	11C	14
1560-435-7913	42C	
1560-435-7914	11C	14
1560-435-7914	42C	
1560-437-0588	MSUP	
1560-446-3589	11A	1
1560-446-3590	11A	1
1560-450-3622	MSUP	
1560-453-5689	20	67
1560-453-5690	20	67
1560-453-5691	33	20
1560-453-9559	62	
1560-453-9559	11B	99A
1560-454-8937	31	
1560-454-8966	12	16
1560-455-9705	28	
1560-456-1979	41	29
1560-456-1980	41	21
1560-462-0428	31	
1560-462-0429	31	
1560-462-0431	31	
1560-471-3329	20	1
1560-471-3330	20	1
1560-472-7298	18	124
1560-472-8687	223	
1560-472-9968	91	8A
1560-477-4027	188	
1560-484-1025	20	32
1560-486-8394	20	56
1560-486-8396	20	56
1560-549-4248	81	
1560-570-9837	249	26
1560-590-0864	28	20
1560-590-0896	11A	3
1560-602-3490	28	21
1560-602-3502	11B	69
1560-606-0641	F23	
1560-620-4227	MSUP	
1560-624-0175	MSUP	
1560-656-9867	211	39
1560-656-9867	218	43A
1560-656-9867	219A	111
1560-656-9867	219A	6
1560-659-2655	75	79
1560-659-9897	10	26
1560-677-1754	83	
1560-678-1186	228	108
1560-678-1217	28	21
1560-687-8626	32	70
1560-687-8670	119	118
1560-695-4909	MSUP	
1560-702-9806	129	46
1560-717-9300	14	37A
1560-717-9300	14	48
1560-717-9326	14	37B
1560-717-9329	14	37C
1560-717-9416	13	95
1560-717-9417	14	21
1560-717-9438	14	2
1560-717-9479	117	10A
1560-717-9479	119	
1560-718-6511	QC1	170
1560-718-6511	259	8
1560-718-6614	QC1	171
1560-718-6614	259	7
1560-725-1193	119	370
1560-725-1242	119	288
1560-725-1245	119	292
1560-725-6073	283	
1560-726-3002	119	333
1560-731-5558	32	75
1560-736-8866	69	34
1560-736-8866	BULK	
1560-738-6827	26	24
1560-739-2557	211	19A
1560-739-2558	33	21
1560-739-2559	33	22
1560-739-2566	33	
1560-739-2566	33	46
1560-739-2574	33	
1560-739-2574	33	46
1560-753-0566	228	52B
1560-756-3845	81	
1560-756-5477	28	18
1560-756-5478	28	17
1560-757-7148	88	47C
1560-758-0308	88	28A
1560-758-1945	88	74
1560-758-1952	88	29
1560-758-1954	88	50A
1560-758-1961	88	
1560-758-3237	89	114
1560-758-3246	69	23
1560-758-7294	119	144
1560-758-9270	20	78

STOCK NUMBER	FIGURE NUMBER	ITEM NUMBER
1560-758-9279	40	46
1560-758-9767	20	68
1560-759-2861	134	45
1560-759-2870	134	57
1560-759-2871	134	34
1560-759-2873	134	26
1560-759-2876	20	87
1560-759-9307	11B	26
1560-759-9309	11B	26
1560-759-9364	31	10A
1560-759-9365	31	10A
1560-759-9935	81	
1560-761-1650	129	8
1560-761-1655	129	10
1560-761-3054	129	7
1560-761-3813	129	7D
1560-762-9381	KITS	
1560-768-8567	41	32
1560-772-6216	129	4
1560-772-6243	129	21
1560-772-6258	129	21B
1560-772-6259	129	21C
1560-772-6278	119	389
1560-774-8635	206	3
1560-774-8912	11	141A
1560-779-3360	119	204
1560-781-6709	13	40A
1560-781-6710	13	40A
1560-781-6711	13	67A
1560-781-6712	13	67A
1560-784-1561	279	
1560-784-1562	279	
1560-788-9741	32	17
1560-789-4933	129	57
1560-789-4936	129	
1560-789-4937	129	
1560-789-4938	239	25
1560-789-4950	239	156
1560-789-4951	239	144
1560-789-4952	239	31
1560-789-4953	239	59
1560-789-4976	239	121
1560-789-4977	239	167
1560-789-4984	222	129
1560-789-4984	237	10A
1560-789-4992	239	77
1560-789-4993	239	43
1560-789-4994	222	117
1560-789-4994	237	38A
1560-789-7783	239	135
1560-789-7785	239	177
1560-789-7786	239	107
1560-789-7787	239	22
1560-794-2578	32	7
1560-794-2617	234	46
1560-799-0473	11B	67
1560-802-8063	10	35
1560-802-8068	10	33
1560-802-8069	21	84
1560-802-8069	21	91
1560-802-8074	10	39
1560-802-8105	22	
1560-802-8110	21	7
1560-802-8116	22	24
1560-802-8122	10	38
1560-802-8130	10	
1560-803-5012	21	9
1560-803-5157	83	280
1560-803-5169	21	610
1560-803-5173	22	19C
1560-803-5173	22	9C
1560-803-5175	21	42
1560-803-5177	22	
1560-803-5180	22	
1560-803-5183	22	
1560-803-5185	22	
1560-803-5190	22	
1560-803-5193	21	54A
1560-803-5196	22	1
1560-804-1976	280	
1560-805-6230	20	13
1560-806-2160	11B	
1560-806-2190	83	252A
1560-806-2191	83	350
1560-825-1607	218	58
1560-825-1609	219	33
1560-825-1609	219	79A
1560-825-1610	218	57
1560-827-0696	18	
1560-827-0700	18	
1560-827-0709	18	47
1560-827-0710	18	47
1560-827-0742	18	176
1560-828-3277	21	
1560-828-3282	14	2
1560-828-3284	14	7
1560-828-3285	14	7
1560-828-3289	14	21
1560-828-3290	14	11
1560-828-3296	188	62
1560-828-3297	18	
1560-828-3307	13	94A
1560-828-3308	13	94A
1560-828-3328	11C	14
1560-828-3328	42C	
1560-828-3331	42A	40
1560-828-3331	42C	37
1560-828-3332	42A	19
1560-828-3332	42C	20
1560-828-3334	14	11
1560-828-8100	32	74
1560-828-8106	32	
1560-828-8108	32	77
1560-828-8115	32	69
1560-828-8122	18	114A
1560-828-8122	18	63A
1560-828-8133	11A	23B
1560-828-8143	32	
1560-829-6833	83	344
1560-829-8435	13	40A
1560-829-8441	13	40A
1560-830-4320	83	96A
1560-830-4325	223	208
1560-830-4326	223	209
1560-830-4328	223	112
1560-830-4330	223	170
1560-830-4331	223	57
1560-830-4332	225	4
1560-830-4335	223	171
1560-830-4336	223	
1560-830-4337	223	
1560-830-4338	223	193

STOCK NUMBER	FIGURE NUMBER	ITEM NUMBER	STOCK NUMBER	FIGURE NUMBER	ITEM NUMBER
1560-830-4339	223	194	1560-848-5084	42A	
1560-830-4340	223	179	1560-854-9047	42A	15A
1560-830-4341	223	180	1560-854-9060	222	189
1560-830-4346	228		1560-854-9060	222	69
1560-830-4348	235		1560-854-9078	20	38
1560-830-7945	88		1560-854-9079	20	38
1560-830-7969	88	82	1560-856-3209	16	
1560-830-7970	88	50A	1560-856-3987	24	11
1560-830-9724	83	216	1560-856-7421	18	120
1560-830-9767	83	276	1560-856-7422	31	26
1560-830-9769	83	65	1560-856-7645	31	18
1560-830-9769	87		1560-856-9222	MSUP	
1560-830-9773	91	23	1560-857-3309	18	108A
1560-831-0742	10	5	1560-857-3310	18	108A
1560-831-0750	10	6	1560-859-6144	81	51
1560-831-0755	28	24L	1560-859-6145	83	287
1560-831-0755	42A		1560-859-6155	81	156A
1560-831-0845	11A	105	1560-859-9282	116	40A
1560-831-0846	11A	105	1560-859-9298	116	40B
1560-831-0849	11A	104	1560-861-2153	14	38
1560-831-0939	11A	103	1560-861-2154	14	39
1560-831-0940	18	177	1560-861-2154	14	40
1560-831-0951	18		1560-862-3836	42A	8
1560-831-0965	18	25	1560-862-3836	42C	9
1560-831-0965	18	68	1560-862-3841	11C	14
1560-831-0967	18		1560-862-3841	42C	
1560-831-0970	18	26	1560-862-3913	284	41
1560-831-0970	18	72	1560-862-3913	285	31
1560-831-0979	62		1560-862-9188	270	16
1560-831-0979	QC1	125	1560-862-9256	76	4
1560-831-0982	13	2D	1560-863-3818	207	31
1560-831-0984	206	5	1560-863-3818	207	36
1560-831-0986	18	6	1560-863-5787	F10	6
1560-831-0988	18	31B			
1560-831-0989	18	31A	1560-866-6018	15	
1560-831-0989	18	81A	1560-866-6019	15	44
1560-831-0994	13	95	1560-866-6031	157	88
1560-831-1000	14	21	1560-866-6031	158	74
1560-831-1001	18	59A	1560-866-6051	31	
1560-831-1002	18	59A	1560-866-6052	31	
1560-831-1056	13	67A	1560-866-6053	31	
1560-831-1060	13	67A	1560-866-6065	17	22A
1560-831-1062	13	16A	1560-867-1195	20	68
1560-831-1097	13	16A	1560-868-1064	62	47
1560-831-2262	235		1560-868-2759	253	46
1560-832-0405	33		1560-868-2762	255	12
1560-832-0405	62	8	1560-868-2763	255	12
1560-832-5777	284	51	1560-868-5798	244	77A
1560-832-9240	11C	80	1560-868-5843	222	69
1560-833-1636	18	17	1560-868-6958	17	18
1560-833-1637	18	17	1560-868-8380	244	88A
1560-834-2202	239	59	1560-868-8468	244	73
1560-834-2237	239	25	1560-868-8469	222	188
1560-834-6674	11B	48	1560-868-8469	222	67
1560-834-6677	32	71	1560-869-0696	17	19
1560-834-6678	32	68	1560-869-3665	32	
1560-834-6680	32	73	1560-869-3666	32	
1560-835-4800	257	1	1560-869-6313	18	91
1560-837-4455	42A	36	1560-869-6313	18	98
1560-839-0659	279	3	1560-869-8985	20	69
1560-839-6742	18	115	1560-869-8986	20	69
1560-842-6274	158	18	1560-869-8991	11	3
1560-844-8060	21	27	1560-869-8996	20	15
1560-844-8122	239	65	1560-869-8997	20	15
1560-844-8523	32		1560-869-8999	28	7
1560-844-8640	42A	5	1560-870-3877	188	54
1560-844-8640	42C	6	1560-870-3878	188	59
1560-847-7448	119	390	1560-870-3879	188	20
1560-848-5070	28	24L	1560-870-3905	279	4
1560-848-5070	42A		1560-870-3907	279	2
1560-848-5084	11	142	1560-871-0206	188	9

STOCK NUMBER	FIGURE NUMBER	ITEM NUMBER
1560-871-3328	31	21
1560-871-3450	69	44
1560-871-8682	95	117
1560-871-8683	95	120
1560-871-8684	95	115
1560-871-8684	95	115A
1560-871-8685	95	119
1560-871-8686	24	2C
1560-872-3296	213	44
1560-872-3296	220	44
1560-872-3297	213	
1560-872-3297	213	45
1560-872-3297	220	45
1560-873-2298	13	16A
1560-873-2299	13	16A
1560-873-2301	18	5
1560-873-2304	18	18
1560-873-2305	18	18
1560-874-8746	25	6
1560-874-8747	25	
1560-874-8748	269	
1560-875-1449	24	
1560-875-1451	24	2C
1560-875-1452	24	21
1560-875-1454	24	27
1560-875-1455	24	
1560-875-1456	24	26
1560-875-1457	24	18
1560-875-1459	11A	85
1560-875-1469	271	16
1560-875-1470	271	23
1560-875-1472	24	13
1560-875-1473	25	20
1560-875-1474	25	
1560-875-1475	24	
1560-875-1476	24	
1560-875-1477	24	
1560-875-1479	24	10
1560-875-1491	18	161D
1560-875-6498	251	25
1560-875-7985	10	13
1560-875-7985	10	29
1560-875-7985	10	40
1560-876-2401	18	19
1560-876-8709	228	136
1560-876-8777	102	48
1560-876-8777	103	41
1560-876-8778	102	30
1560-876-8779	102	9
1560-876-8779	103	11
1560-878-0309	62	14
1560-878-0309	QC1	20
1560-878-5581	234	39
1560-878-5581	234	4
1560-878-5581	234	51
1560-878-5586	75	130
1560-879-2478	10	1
1560-881-0270	42A	35
1560-881-9562	62	
1560-881-9562	118	99A
1560-882-6494	129	19
1560-882-6551	31	22
1560-882-8121	25	26
1560-882-8134	235	12
1560-884-5454	39	12
1560-885-0025	21	6
1560-885-0026	21	6
1560-885-0028	21	75
1560-885-0029	22	31
1560-885-0042	20	95A
1560-885-0046	20	83
1560-885-0046	20	96
1560-885-0056	16	
1560-885-0058	15	4
1560-885-0059	20	2
1560-885-0063	16	22
1560-885-0064	15	10B
1560-885-0066	16	44
1560-885-0069	15	34
1560-885-0073	15	12A
1560-885-0074	15	36B
1560-885-0075	15	17C
1560-885-0076	15	15
1560-885-0077	15	27C
1560-885-0078	15	41
1560-885-0078	16	
1560-885-0079	15	2
1560-885-0081	20	2
1560-885-8651	16	24A
1560-885-8653	16	
1560-885-8654	16	
1560-885-8656	11	127A
1560-885-8657	10	5
1560-885-8658	10	8
1560-885-8659	10	7
1560-885-8660	10	6
1560-885-8661	11	133
1560-885-8662	11	131
1560-885-8663	11	132
1560-885-8667	10	
1560-885-8667	10	12
1560-885-8670	31	6
1560-885-8672	31	9
1560-885-8678	17	10
1560-885-8679	28	4
1560-885-8679	28	8A
1560-886-1301	F5	6
1560-886-1312	16	
1560-886-1314	16	31
1560-886-1320	16	4
1560-886-1321	16	
1560-886-1322	10	4
1560-886-1334	16	
1560-886-1335	16	
1560-886-1336	11	4
1560-886-1337	17	5
1560-886-1338	11	120
1560-886-1338	11B	24
1560-886-1339	10	9
1560-886-1347	28	5A
1560-886-1348	28	2
1560-886-1532	107	12
1560-886-2152	249	14
1560-886-2154	33	20
1560-886-2189	218	12
1560-886-2189	218	7A
1560-886-2189	219	57
1560-886-2189	219	6
1560-886-3327	18	
1560-886-3330	18	134
1560-886-3330	18	2
1560-886-3337	112	50
1560-886-3337	116	1
1560-886-3340	18	153
1560-886-3341	18	140
1560-886-3345	18	154
1560-886-3346	32	42A

STOCK NUMBER	FIGURE NUMBER	ITEM NUMBER	STOCK NUMBER	FIGURE NUMBER	ITEM NUMBER
1560-886-3351	32	57	1560-895-9411	33	40
1560-886-3357	32		1560-895-9418	83	281
1560-886-3357	32	65	1560-895-9436	83	347
1560-886-3358	32	65	1560-895-9470	62	19
1560-886-3359	32	64	1560-897-5280	33	34
1560-886-3360	32	64	1560-898-9241	21	
1560-886-3361	32	63	1560-902-6544	129	3
1560-886-3362	32	66	1560-902-7144	129	107
1560-886-3363	32	59	1560-902-7145	129	88
1560-886-3364	32	59	1560-902-7151	129	89
1560-886-3370	226	16	1560-903-3523	119	334
1560-886-9654	18	120	1560-906-1274	11A	46
1560-886-9656	273	32	1560-906-1290	11A	
1560-886-9657	31	17B	1560-906-1326	10	27
1560-886-9658	18	156	1560-906-1331	105	8
1560-886-9661	11B		1560-906-3584	182	49
1560-886-9664	31	17B	1560-906-3905	11A	30
1560-887-6200	11A	18	1560-906-6762	11C	18
1560-887-6201	251	13	1560-906-6762	11C	4
1560-887-6203	211	14B	1560-906-6762	11C	8
1560-887-6205	11A	99	1560-907-4873	69	26
1560-887-6206	11A	100	1560-907-4896	213	
1560-887-6207	11A	101	1560-907-4896	220	50
1560-887-6208	11A	102	1560-907-7022	32	
1560-887-6209	11A	102	1560-907-7635	40	16
1560-887-6210	211	53	1560-908-4178	40	41
1560-887-6211	251	32	1560-908-8209	11B	13
1560-887-6212	13	40A	1560-908-8213	11B	28
1560-887-6213	13	40A	1560-909-2605	280	4
1560-887-6223	18	52	1560-909-2606	280	12
1560-887-6225	18	53	1560-909-2607	280	7
1560-887-6226	18	45	1560-909-2608	280	10
1560-887-6228	18	67	1560-909-2609	280	8
1560-887-6229	18	65	1560-909-2610	280	11
1560-888-4852	13	33	1560-909-7044	11B	30
1560-888-4852	13	63	1560-910-2612	26	
1560-888-4852	13	84	1560-910-2688	32	
1560-888-4856	13	23A	1560-910-3129	21	
1560-888-4856	13	74A	1560-910-3162	11B	
1560-888-4876	18	115	1560-910-3872	24	16B
1560-889-3304	62		1560-910-3873	24	2C
1560-889-3304	11B	99A	1560-910-6931	10	18
1560-889-7301	10		1560-910-6932	18	46
			1560-910-6935	13	40A
			1560-910-6937	18	115
1560-889-7925	25	30	1560-910-6939	18	115
1560-890-2793	13	16A	1560-910-6940	18	46
1560-890-2794	13	16A	1560-910-6941	18	43
1560-890-2795	32	53A	1560-910-6942	18	43
1560-890-2801	12	1	1560-910-8901	124	
1560-890-2802	12	2	1560-910-8901	KITS	
1560-890-2803	12	3	1560-910-9626	13	40A
1560-890-2804	12	4	1560-910-9627	13	40A
1560-890-2805	12	5	1560-911-0928	13	40A
1560-890-2806	12	6	1560-911-4798	19	1
1560-890-2807	12	6	1560-911-7686	20	1
1560-890-2808	12	7	1560-911-7687	20	1
1560-890-2809	12	8	1560-912-3042	129	102
1560-890-2810	12	9	1560-914-6265	10	
1560-890-2811	12	10	1560-914-6265	11B	66
1560-890-2812	12	11	1560-914-9515	18	51
1560-890-2813	12	12	1560-916-2597	32	
1560-890-2815	12	14	1560-916-2598	32	
1560-891-1387	11B	105	1560-916-2604	11C	7
1560-895-9354	33	33	1560-916-2605	11C	6
1560-895-9355	33	31	1560-916-2607	21	74
1560-895-9358	33	42	1560-916-2613	18	102
1560-895-9362	88	81	1560-916-2613	18	110
1560-895-9403	33	27	1560-916-2613	18	22
1560-895-9405	QC1	11	1560-918-2459	11A	61
1560-895-9406	62	21	1560-918-2460	11A	59

STOCK NUMBER	FIGURE NUMBER	ITEM NUMBER	STOCK NUMBER	FIGURE NUMBER	ITEM NUMBER
1560-918-2678	11C	12	1560-928-4058	32	
1560-918-2679	11C	12	1560-928-6249	10	24
1560-918-2687	18	18	1560-928-6250	32	25
1560-918-2688	18	18	1560-928-6250	11A	2
1560-918-4414	112	114	1560-928-6250	11B	29
1560-918-4723	112	65	1560-928-6260	211	3
1560-918-5846	11	71	1560-928-6271	10	24
1560-918-5905	11	10	1560-928-6296	10	46
1560-918-7088	42A	39	1560-928-6296	11	140
1560-918-7088	42C	36	1560-928-6296	11A	28
1560-919-7990	11	64	1560-928-6296	11A	44
1560-919-7994	18	91	1560-928-6296	11A	57
1560-919-7994	18	98	1560-928-6296	11A	74
1560-919-7994	11A	1A	1560-928-6296	11B	53
1560-919-9250	211	53	1560-928-6296	11B	60
1560-919-9989	245	17	1560-928-6313	18	
1560-920-7210	14	1	1560-929-8495	13	94A
1560-920-7211	14	1	1560-929-8496	13	94A
1560-920-8405	62	39	1560-929-8497	13	67A
1560-921-0641	18	119	1560-929-8498	13	67A
1560-922-2716	62	60F	1560-930-0157	219	51
1560-922-2732	219	32	1560-930-0157	219	98
1560-922-2732	219A	95	1560-930-0161	12	15
1560-922-2733	219	32	1560-930-0210	18	43
1560-922-2733	219A	95	1560-930-0242	18	43
1560-922-2734	218	60	1560-930-0250	219	59A
1560-922-2735	218	59	1560-930-0250	219	9A
1560-922-2735	219	79	1560-931-2320	279	6
1560-922-2735	219A	189	1560-931-2322	279	4
1560-922-2736	219	79	1560-931-2323	279	8
1560-922-2736	219A	189	1560-931-2324	275	
1560-922-2737	218		1560-931-2324	279	1
1560-922-2737	218	29	1560-931-2326	279	2
1560-922-2737	219	22	1560-931-2327	279	7
1560-922-2737	219	67	1560-931-2331	279	1
1560-922-2738	218		1560-931-2332	279	4
1560-922-2738	218	30	1560-931-2334	279	1
1560-922-2738	219	22	1560-931-2341	279	8
1560-922-2738	219	67	1560-932-9820	286	13
1560-922-2739	218	12	1560-932-9821	294	4
1560-922-2739	218	7A	1560-932-9822	294	1
1560-923-2297	18	22	1560-932-9823	294	2
1560-923-2545	20		1560-932-9824	294	3
1560-923-3191	18	115	1560-932-9827	286	3
1560-923-6021	11B	43	1560-932-9828	286	24
1560-924-7692	18	115	1560-932-9832	284	16
1560-924-8248	21	25A	1560-932-9832	285	19
1560-924-8249	21	6	1560-932-9833	284	17
1560-925-2884	11A	10	1560-932-9833	285	16
1560-925-2893	11A	4	1560-932-9834	284	36
1560-925-2950	11A	8	1560-932-9834	285	37
1560-925-4138	21	16C	1560-932-9835	284	34
1560-925-4140	21	14C	1560-932-9835	285	36
1560-925-8140	11C	72	1560-932-9836	285	45
1560-925-8141	11C	73	1560-932-9837	284	32
1560-927-3629	11B	43	1560-932-9837	285	35
1560-927-4545	191	45	1560-932-9838	284	5
1560-927-9519	10	10	1560-932-9838	285	4
1560-927-9520	18	19	1560-932-9839	284	6
1560-927-9521	18	19	1560-932-9839	285	6
1560-927-9522	11B	119	1560-932-9841	284	30
1560-928-1980	28	28B	1560-932-9841	285	33
1560-928-1981	20	64	1560-932-9842	284	27
1560-928-1983	11	47	1560-932-9842	285	32
1560-928-3857	20	66A	1560-932-9847	287	34
1560-928-3858	20	66A	1560-932-9848	287	13
1560-928-3859	116	37	1560-932-9849	287	10
1560-928-3862	116	37	1560-932-9852	286	28
1560-928-3868	211	8	1560-932-9853	286	9
1560-928-3873	40	1	1560-936-4294	10	
1560-928-4010	251	58A	1560-936-4350	20	58

STOCK NUMBER	FIGURE NUMBER	ITEM NUMBER	STOCK NUMBER	FIGURE NUMBER	ITEM NUMBER
1560-936-8447	42A	21	1560-951-7476	213	16
1560-936-8447	42C	22	1560-951-7476	220	13
1560-937-1584	11		1560-951-7476	221	27
1560-938-1707	42A	5	1560-951-7477	213	33
1560-938-8362	11A		1560-951-7477	220	14
1560-939-5920	116	36	1560-951-7477	221	74
1560-939-5935	211	8	1560-952-7248	31	11
1560-939-5936	211	3	1560-952-7269	11B	19
1560-939-5947	11B		1560-953-0224	88	74
1560-939-7392	18	103	1560-954-1292	76	15
1560-939-7392	18	23			
1560-939-7648	31	13			
1560-939-8389	11A	16D			
1560-939-8392	11A	16B	1560-955-9565	34	16
1560-939-9741	40	16	1560-955-9566	34	15
1560-940-8205	32	45	1560-955-9567	38	11
1560-941-5187	11	61E	1560-955-9568	38	10
1560-941-5199	40	22	1560-955-9579	88	28A
1560-941-5241	62	52	1560-955-9581	25	31
1560-941-5241	QC1	151	1560-955-9581	26	
1560-941-8495	251	4	1560-956-2971	204	
1560-941-8768	117	10A	1560-956-9927	107	
1560-941-8768	119		1560-956-9927	139	53
1560-942-9651	201	92	1560-956-9929	15	28D
1560-943-0770	39	1	1560-957-3125	257	22
1560-943-0771	39	2	1560-957-7449	40	15
1560-943-0774	39	8	1560-957-7756	129	45
1560-943-0776	39	5	1560-957-7758	129	90
1560-943-0777	39	6	1560-959-6017	11B	
1560-943-0779	39	10	1560-959-6076	31	14
1560-943-0794	129	28	1560-960-0461	10	10
1560-943-0796	129	30A	1560-960-4080	26	23
1560-944-2490	28	22	1560-960-8899	228	52A
1560-944-2507	33	24	1560-961-1323	88	76
1560-944-2508	33	25	1560-961-1329	18	92
1560-944-2509	32	45	1560-961-1329	18	99
1560-944-2554	21	11	1560-961-1370	129	
1560-945-0216	28	20	1560-961-4376	129	
1560-945-0217	28	21	1560-961-4377	129	6
1560-945-4828	283		1560-961-4378	129	16
1560-945-8786	11B	104	1560-961-4391	129	
1560-946-1494	33	4A	1560-963-0961	81	125
1560-946-1495	33	4B	1560-963-0993	119	165
1560-946-2142	28	6	1560-963-1076	243	9D
1560-947-6231	139				
1560-947-6233	139				
1560-948-0900	11A	11			
1560-948-0900	11A	6			
1560-948-0900	11A	9	1560-963-9214	188	25
1560-948-9705	207	29	1560-963-9215	28	14B
1560-948-9746	32	56	1560-963-9228	11C	21
1560-948-9847	32	56	1560-964-1067	179	4
1560-949-5898	42A	32	1560-966-4364	251	60
1560-949-5898	42C	33	1560-966-4365	211	22
1560-949-5899	42A	32	1560-966-4373	18	
1560-949-5899	42C	33	1560-966-7536	15	40
1560-949-7712	11A	11	1560-966-7574	129	108
1560-949-7712	11A	6	1560-966-7575	129	78
1560-949-7712	11A	9	1560-967-7565	11B	80
1560-949-7851	251	24	1560-967-7603	109	12
1560-949-8227	16		1560-969-3975	81	96
1560-949-8253	16	44	1560-969-3976	22	42A
1560-949-8253	19	6	1560-969-6589	139	50
1560-949-8253	28	29	1560-973-1932	11A	33
1560-949-8255	11C	30	1560-973-1932	11A	49
1560-949-8258	19		1560-974-6461	10	
1560-949-8259	21		1560-974-6462	10	
1560-950-2433	11C	23	1560-974-6480	11A	20
1560-950-6830	18	148	1560-974-6481	11A	22
1560-950-6831	18	147A	1560-975-0517	157	26
1560-950-7013	25	32	1560-975-0517	158	59

STOCK NUMBER	FIGURE NUMBER	ITEM NUMBER
1560-975-0519	157	78
1560-975-0519	158	70
1560-976-9311	211	39
1560-976-9311	218	43
1560-976-9311	219	
1560-976-9311	219	34
1560-976-9312	213	52
1560-976-9312	220	51
1560-977-1036	28	21
1560-977-1037	28	20
1560-977-1771	118	
1560-977-1807	118	
1560-977-5694	118	11
1560-977-5699	14	14
1560-977-5700	14	20
1560-977-5701	14	20
1560-977-5702	14	14
1560-977-5710	21	
1560-977-5711	14	1
1560-977-5712	14	1
1560-977-5713	14	6
1560-977-5714	14	6
1560-977-5715	14	10
1560-977-5716	14	10
1560-977-5717	118	34
1560-977-7484	279	8
1560-977-7485	253	5
1560-977-7486	253	8
1560-978-2154	10	32
1560-978-7597	11A	34
1560-978-7597	11A	48
1560-978-7597	11A	63
1560-979-5613	240	
1560-979-5620	13	95
1560-979-5621	13	95
1560-980-1841	110	18
1560-980-1842	110	19
1560-980-1843	110	31
1560-980-1844	110	32
1560-980-7306	238	43
1560-980-7307	240	
1560-980-7308	240	
1560-980-7309	240	
1560-980-7311	238	27
1560-980-7312	238	20
1560-980-7313	240	
1560-980-7314	240	
1560-980-7315	240	
1560-980-7316	240	
1560-980-7320	236	
1560-980-7322	244	
1560-980-7325	243	
1560-980-7326	243	
1560-980-7327	242	40
1560-980-7328	242	39
1560-980-7329	242	37
1560-980-7330	242	36
1560-980-7337	243	7A
1560-980-7340	243	5
1560-980-9403	75	135
1560-980-9522	16	
1560-981-3042	76	4
1560-982-9982	22	12C
1560-987-7495	242	38
1560-987-7496	81	
1560-987-7505	222	41G
1560-987-7506	222	41F
1560-987-7518	102	37
1560-987-7538	222	41H
1560-987-9552	222	41J
1560-988-0019	200	10
1560-988-0019	201	79
1560-988-0037	41	35
1560-990-3066	129	23C
1560-990-9748	10	14
1560-990-9748	10	24
1560-990-9749	10	14
1560-990-9749	10	24
1560-991-8474	240	29A
1560-991-8475	236	
1560-991-8476	81	193A
1560-991-8477	33	55
1560-991-8478	238	8A
1560-991-8479	18	
1560-991-8480	22	
1560-991-8481	81	146
1560-991-8482	240	
1560-991-8484	11C	64A
1560-991-8485	32	59
1560-991-8486	32	59
1560-991-8488	22	
1560-991-8535	238	42
1560-991-8536	81	96
1560-992-4607	88	84A
1560-992-4608	88	84B
1560-992-4611	88	74
1560-992-4612	88	42
1560-992-9260	31	11
1560-995-6938	79	20
1560-996-3938	91	23
1560-996-7443	243	7
1560-996-7452	139	41
1560-996-7452	139	89
1560-997-0016	208	43
1560-997-0017	208	42
1560-997-4718	118	
1560-997-4736	20	60
1560-997-4737	20	60
1560-998-4769	33	4A
1560-998-4770	33	4B
1560-998-4771	62	39
1560-998-4772	62	36
1560-998-7638	62	60F
1560-998-7638	QC1	72
1560-999-0471	255	27
1560-999-0472	255	27
1560-999-0473	255	26
1560-999-0474	255	25
1560-999-0475	255	
1560-999-1712	21	
1615-001-6441	76	
1615-001-6442	70	
1615-001-6443	70	
1615-003-1146	75	80A
1615-003-1146	222	163
1615-003-1146	222	177
1615-003-1146	222	58
1615-003-1146	222	95
1615-003-1146	244	56
1615-003-1146	244	67
1615-003-1147	75	76A
1615-003-1147	222	46
1615-003-1147	244	40
1615-003-1147	KITS	
1615-003-1148	75	81A
1615-003-1148	222	198
1615-003-1148	222	209
1615-003-1148	222	78
1615-003-1148	222	82
1615-003-1148	244	52
1615-003-1148	244	84

STOCK NUMBER	FIGURE NUMBER	ITEM NUMBER	STOCK NUMBER	FIGURE NUMBER	ITEM NUMBER
1615-003-1148	244	95	1615-016-0999	90	7
1615-003-1149	75	18A	1615-018-6433	83	
1615-003-1149	KITS		1615-018-6437	83	
1615-003-1150	75	77A	1615-018-6438	83	
1615-003-1150	222	95	1615-018-6439	81	
1615-003-1150	244	67	1615-018-6440	81	
1615-003-1150	KITS		1615-018-6445	76	
1615-003-1151	75	78A	1615-019-0286	76	179
1615-003-1151	222	58	1615-019-0287	76	178B
1615-003-1151	244	56	1615-019-0320	76	55A
1615-003-1151	KITS		1615-019-5142	83	216
1615-003-1152	71	73C	1615-019-5165	74	71
1615-003-1152	75	17A	1615-019-5174	91	
1615-003-1153	75	55A	1615-019-5225	76	38B
1615-003-1154	75	47A	1615-019-5230	89	108
1615-003-1154	KITS		1615-020-2702	80	5
1615-003-1156	75	82A	1615-020-2703	81	127
1615-003-1156	244	84	1615-020-2706	83	353
1615-003-1156	244	95	1615-020-2708	88	30
1615-003-1156	KITS		1615-020-2709	76	46
1615-003-1157	75	47A	1615-020-2711	80	16
1615-003-1158	75	18A	1615-020-2712	80	12
1615-003-1158	KITS		1615-020-5744	80	3
1615-003-1159	71	73A	1615-021-2701	92	52A
1615-003-1159	75	17A	1615-021-2702	92	101
1615-003-1160	75	55A	1615-021-2703	90	13
1615-003-1160	KITS		1615-021-2704	90	12
1615-004-1010	75	80A	1615-021-2705	81	86
1615-004-1010	244	26	1615-021-2706	81	90
1615-004-1010	244	67	1615-021-2707	83	225
1615-004-8885	71		1615-021-2708	83	229
1615-004-8886	71		1615-021-2709	76	74
1615-004-8887	71		1615-021-2710	76	149
1615-004-8388	71		1615-021-2711	76	168A
1615-004-8889	71	112	1615-021-2712	76	68
1615-004-8890	71	112	1615-021-2713	89	74
1615-004-8891	71	112	1615-021-2714	89	100
1615-004-8892	71	112	1615-021-2715	89	55
1615-006-7695	83		1615-021-2716	89	58
1615-007-9565	69	40A	1615-021-2718	76	89
1615-007-9565	70	44	1615-021-2718	80	
1615-008-1852	69		1615-021-2719	74	
1615-008-1853	69		1615-021-2720	74	31
1615-008-1854	69		1615-021-2723	76	129
1615-008-1855	69		1615-022-1057	95	134
1615-008-1856	69		1615-022-1057	95	15A
1615-008-1857	69		1615-040-8101	70	36
1615-008-1858	69		1615-040-8106	70	36
1615-008-1859	69		1615-040-8109	70	36
1615-008-1860	69		1615-040-8115	70	36
1615-008-3275	69	3	1615-040-8118	70	36
1615-008-3275	70	17	1615-040-8125	70	36
1615-008-3276	69	47	1615-040-8129	70	36
1615-008-3276	70		1615-040-8132	70	36
1615-009-5405	81		1615-040-8231	70	37
1615-010-0371	88	75	1615-040-8232	70	37
			1615-040-8240	70	35
			1615-040-8243	70	35
			1615-040-8244	70	35
			1615-040-8246	70	35
1615-012-4582	69	48			
1615-012-4594	76	21A			
1615-012-4594	79				
1615-012-4597	76	6	1615-042-5618	89	84
1615-016-0817	89		1615-042-5619	89	28
1615-016-0848	89	32			
1615-016-0850	89	79			
1615-016-0852	89	121	1615-044-2925	81	14
1615-016-0853	89	101A	1615-045-9956	81	
1615-016-0997	89	107	1615-045-9958	83	

STOCK NUMBER	FIGURE NUMBER	ITEM NUMBER
1615-045-9959	83	
1615-045-9960	83	
1615-045-9961	81	
1615-045-9962	83	
1615-045-9963	81	
1615-050-6162	76	65B
1615-050-6162	89	63
1615-050-6163	76	163A
1615-050-6195	74	60
1615-050-6196	89	91
1615-050-6197	89	97
1615-050-6198	89	96
1615-050-6199	76	180
1615-050-8143	81	
1615-052-4464	70	
1615-052-4476	70	
1615-052-9627	70	
1615-052-9628	70	
1615-054-0932	71	
1615-054-0933	71	
1615-055-2912	81	
1615-055-2914	75	9
1615-055-2961	76	
1615-055-5002	95	132
1615-056-2283	81	
1615-056-2297	82	32
1615-056-2299	82	5
1615-056-2301	82	18A
1615-056-2302	82	17
1615-056-7022	88	
1615-057-1832	83	321
1615-057-1833	81	186
1615-057-8260	81	141
1615-057-8260	83	273
1615-057-8261	70	
1615-057-8262	70	
1615-059-6247	74	44
1615-060-3893	89	48
1615-060-3897	89	41
1615-060-3899	89	119
1615-064-6524	71	
1615-065-5484	83	
1615-065-5485	83	350
1615-065-5486	83	252A
1615-065-5512	71	
1615-065-5514	83	
1615-065-7584	91	30
1615-066-0285	92	13
1615-066-0285	92	68
1615-068-6550	74	47
1615-068-6551	74	50
1615-068-6556	74	46
1615-068-6557	74	68
1615-068-6561	74	72
1615-068-6564	74	74
1615-068-6565	74	58
1615-068-6567	74	73
1615-068-6568	74	36
1615-068-6574	81	163
1615-068-6574	91	24
1615-068-6578	89	64
1615-068-6581	89	27
1615-068-6585	89	46
1615-068-6593	89	4
1615-068-6595	89	14
1615-068-6597	89	10
1615-068-6598	89	45
1615-068-6600	76	57B
1615-068-6601	76	146C
1615-068-6606	76	55D
1615-068-6607	76	72F
1615-068-6609	76	65A
1615-068-6610	76	127B
1615-068-6618	76	51A
1615-068-6618	89	87
1615-068-6622	83	
1615-069-3151	74	55
1615-069-3220	90	16
1615-069-3226	74	30
1615-069-3230	74	42
1615-069-3299	74	51
1615-069-3300	74	21
1615-069-3301	74	39A
1615-069-3302	74	54
1615-069-9500	78	28
1615-069-9502	78	4
1615-069-9504	78	33A
1615-069-9504	78	38A
1615-070-1135	74	49
1615-070-1137	74	22
1615-070-1138	74	35
1615-070-6761	71	
1615-070-6762	71	
1615-070-6765	71	
1615-070-6779	71	
1615-070-6835	81	170
1615-070-7873	76	24B
1615-070-7873	79	
1615-071-4497	74	63A
1615-071-4522	75	20A
1615-071-4523	75	20A
1615-071-4524	75	32B
1615-071-4525	75	32B
1615-072-1074	75	
1615-073-3997	90	15A
1615-073-3997	92	37C
1615-073-3997	92	91C
1615-073-5278	74	62
1615-073-6584	88	74
1615-073-9765	76	13
1615-074-9931	90	
1615-074-9932	92	92A
1615-074-9933	81	164
1615-074-9941	75	39
1615-075-1898	76	165D
1615-076-1485	76	72C
1615-076-1491	74	17
1615-076-2690	71	
1615-076-2701	71	
1615-078-2768	89	115
1615-078-2771	89	20A
1615-078-4758	88	
1615-079-1007	89	
1615-081-3545	70	
1615-082-0392	75	5A
1615-083-0466	81	92
1615-083-2810	76	18
1615-083-2810	81	26
1615-083-2810	83	125
1615-083-2830	83	223
1615-084-8455	76	110
1615-089-3889	81	
1615-089-3890	81	
1615-089-3891	81	
1615-089-3892	81	
1615-089-3949	81	
1615-089-3950	81	
1615-089-3951	81	
1615-089-3952	81	
1615-089-4038	81	
1615-089-4039	81	

STOCK NUMBER	FIGURE NUMBER	ITEM NUMBER	STOCK NUMBER	FIGURE NUMBER	ITEM NUMBER
1615-089-4040	81		1615-112-8907	71	
1615-089-4041	81		1615-112-8907	KITS	
1615-089-4042	81		1615-113-0865	83	299
1615-089-4043	81		1615-113-5728	89	131
1615-089-4530	81		1615-113-5751	83	87
1615-089-4531	81		1615-113-5769	69	17
1615-089-4532	81		1615-113-5770	83	68
1615-089-4895	83		1615-113-5770	83	71
1615-089-4896	83		1615-113-5770	83	84
1615-089-4897	83		1615-115-0709	71	
1615-089-4898	83		1615-115-0710	71	137
1615-089-4899	83		1615-115-0711	71	141
1615-089-4900	83		1615-115-0712	75	83
1615-089-4901	83		1615-115-4718	244	77A
1615-089-4902	83		1615-118-5657	69	44
1615-089-4903	83		1615-121-6353	244	
1615-089-4904	83		1615-124-1639	69	17A
1615-089-4905	83		1615-124-1640	69	17B
1615-089-4906	83		1615-127-5637	70	
1615-089-4907	83		1615-128-1631	76	7
1615-089-4908	83		1615-131-2012	70	28
1615-089-4909	83		1615-133-6890	83	235
1615-089-4910	83		1615-135-0364	70	35
1615-089-4911	83		1615-135-2549	69	43
1615-089-4912	83		1615-135-2568	75	121
1615-089-4913	83		1615-141-7005	75	
1615-089-4914	83		1615-159-0334	95	
1615-089-4915	83		1615-159-0334	95	15B
1615-089-4916	83		1615-167-8442	71	
1615-089-4917	81		1615-167-8442	KITS	
1615-089-7131	83	21C	1615-167-8443	71	
1615-092-4661	81		1615-168-5913	76	165D
1615-092-4666	83		1615-168-5933	89	107
1615-097-0089	70		1615-168-5934	89	
1615-102-3910	71		1615-168-5935	89	101A
1615-102-3949	71	61	1615-168-5993	83	
1615-102-9991	70		1615-168-5994	83	
1615-102-9994	71		1615-172-2099	70	
1615-103-0002	81		1615-172-2101	70	
1615-103-0005	70	35	1615-172-2102	70	
1615-103-0006	70	36	1615-172-2103	70	
1615-103-0007	70	36	1615-172-2104	70	
1615-103-0008	70	29	1615-172-2105	70	
1615-103-0009	70		1615-176-1185	81	148
1615-103-4629	83	221	1615-176-1185	83	290
1615-103-6846	71		1615-176-1191	81	96
1615-103-6853	71		1615-176-1192	76	154
1615-104-4653	71	58			
1615-104-6731	71	59			
1615-104-6752	83	65			
1615-104-6752	87				
1615-105-3001	75	71	1615-176-1197	89	112
1615-105-6246	89	97	1615-176-1199	81	150
1615-106-2328	73	53			
1615-106-7910	75	186			
1615-106-7911	75		1615-176-1202	83	77
1615-109-4576	81		1615-176-1203	83	276
1615-109-4584	89	97	1615-176-1204	92	15C
1615-109-4585	83	252A	1615-176-1204	92	73
1615-111-2872	83	253	1615-176-1205	92	36
1615-111-2873	89	96	1615-176-1205	92	90
1615-111-6803	83		1615-176-1206	90	12
1615-111-6804	83				
1615-111-6806	81		1615-176-1235	89	107
1615-111-6809	81	186	1615-176-1236	83	283
1615-111-6814	83	321	1615-176-1239	83	192
1615-111-6815	83		1615-176-1240	76	174
1615-111-6816	81		1615-176-1241	83	344
1615-111-6817	81		1615-176-2106	70	
1615-112-8905	70		1615-176-2111	70	
1615-112-8906	70		1615-176-2624	76	144F

STOCK NUMBER	FIGURE NUMBER	ITEM NUMBER
1615-176-2627	76	142C
1615-176-2628	76	
1615-178-8341	75	121
1615-178-8343	75	121
1615-179-0817	69	
1615-179-0818	69	
1615-179-0821	69	
1615-179-0826	69	
1615-179-0827	69	
1615-179-0829	69	
1615-179-0830	69	
1615-179-0831	69	
1615-179-0832	69	
1615-179-0833	69	
1615-179-0837	69	
1615-179-0840	69	
1615-179-0842	69	
1615-179-0843	69	
1615-179-0858	69	
1615-179-0870	69	
1615-179-5908	75	
1615-179-5909	75	
1615-179-5911	75	
1615-179-5913	75	
1615-179-5915	75	
1615-179-5916	75	
1615-179-5919	75	
1615-179-5920	75	
1615-179-5921	75	
1615-179-5922	75	
1615-179-5938	75	
1615-179-6307	89	
1615-179-9209	71	
1615-179-9210	71	
1615-181-3734	69	
1615-181-3734	70	16
1615-181-3736	70	
1615-181-3737	70	
1615-181-3742	70	
1615-181-3746	70	
1615-181-3855	70	
1615-181-3856	70	
1615-181-3983	70	
1615-181-3984	70	
1615-181-3985	70	
1615-181-3986	70	
1615-181-3987	70	
1615-181-3989	70	
1615-181-3990	70	
1615-181-3991	70	
1615-181-3992	70	
1615-181-3993	70	36
1615-181-3994	70	36
1615-181-3995	70	35
1615-181-3996	70	35
1615-181-3997	70	
1615-181-3998	70	
1615-181-3999	70	
1615-181-4006	70	
1615-181-4007	70	
1615-181-4013	70	
1615-181-4014	70	
1615-181-4015	70	
1615-181-4016	70	
1615-181-4017	70	
1615-181-4018	70	
1615-181-4127	75	99
1615-181-5490	69	
1615-181-5491	69	
1615-181-5494	69	
1615-181-5495	69	
1615-181-5496	69	
1615-181-5499	95	134
1615-181-5499	95	15A
1615-181-5503	95	66
1615-181-5503	95	72
1615-181-5503	95	78
1615-181-5505	69	98
1615-181-5511	69	9A
1615-182-3080	89	133
1615-185-8295	71	104
1615-187-3943	69	
1615-187-3944	69	
1615-198-8541	89	96
1615-198-8542	89	97
1615-200-7705	69	28
1615-201-1010	96	14
1615-202-8646	69	26
1615-208-7599	69	35
1615-213-7188	69	
1615-213-7252	69	
1615-213-7253	69	
1615-213-7257	69	
1615-213-7259	69	
1615-213-7260	69	
1615-213-7262	69	
1615-213-7263	69	
1615-213-7264	69	
1615-213-7265	69	
1615-213-7266	69	
1615-213-7268	69	
1615-213-7269	69	
1615-213-7270	69	
1615-213-7271	69	
1615-213-7272	69	
1615-213-7273	69	
1615-217-6618	69	
1615-226-9561	69	
1615-226-9562	69	
1615-245-2249	71	
1615-245-2250	71	
1615-245-2251	71	
1615-245-2256	71	
1615-253-1544	69	9A
1615-253-1545	69	9
1615-262-9713	70	
1615-262-9718	70	
1615-400-7310	71	
1615-400-7311	71	116A
1615-400-7312	71	132
1615-404-7559	69	
1615-404-7603	71	77A
1615-404-7603	KITS	
1615-407-2823	81	
1615-407-2824	81	
1615-420-7844	83	124
1615-421-1783	70	
1615-421-1784	70	
1615-469-5036	70	30
1615-469-5037	70	30
1615-469-5038	70	30
1615-472-7290	95	179
1615-472-7290	99	
1615-472-7291	93	1
1615-472-7291	94	
1615-472-7292	93	15
1615-472-7294	91	6A
1615-477-6304	76	109
1615-477-6304	81	33
1615-477-6304	83	110
1615-477-6305	69	17
1615-493-9474	89	131

STOCK NUMBER	FIGURE NUMBER	ITEM NUMBER	STOCK NUMBER	FIGURE NUMBER	ITEM NUMBER
1615-493-9475	89	131	1615-756-5488	69	39
1615-549-4243	81	186	1615-756-7932	91	8A
1615-549-4245	81	63	1615-757-2867	69	29
1615-549-4246	81	79A	1615-757-4850	81	17
1615-549-4247	81	184	1615-757-7098	71	112
			1615-757-7112	71	80A
1615-560-2420	73	44	1615-757-7115	71	111
1615-588-3586	92	106	1615-757-7116	71	112
1615-588-3586	92	89	1615-757-7119	76	
1615-588-4020	92	104	1615-757-7120	76	
1615-588-4020	92	37	1615-757-7121	76	
1615-588-4020	92	51	1615-757-7122	76	
1615-588-4020	92	91	1615-757-7123	76	
1615-677-1751	81	144	1615-757-7124	76	
1615-677-1751	83	288	1615-757-7125	76	
1615-677-1758	83	281	1615-757-7126	71	
1615-677-1759	83	280	1615-758-0175	71	81
1615-677-1760	81	145	1615-758-0176	71	
1615-677-1760	83	287	1615-758-0291	88	
1615-686-1339	83		1615-758-1944	88	
1615-686-1342	83		1615-758-1958	76	38B
1615-691-6362	95	106	1615-758-1959	83	170A
1615-691-6370	95	80	1615-758-1960	83	252A
1615-700-9929	81		1615-758-2820	83	276
1615-701-0055	81		1615-758-4760	89	64
1615-731-1559	81	43	1615-758-5695	98	13
1615-731-1559	82		1615-758-5696	99	12
1615-731-1560	81	36A	1615-758-9756	79	11
1615-731-1560	96		1615-759-8304	74	68
1615-731-1561	83	348	1615-759-8321	74	39A
1615-731-1562	83	21	1615-759-9916	75	
1615-731-1568	88	80	1615-759-9917	75	135
1615-731-5165	70	36	1615-759-9923	75	135
1615-731-5213	70	36	1615-759-9932	75	
1615-731-5216	70	35	1615-763-1274	94	2
1615-731-5239	70	35	1615-763-1707	94	4
1615-731-5264	70	37	1615-763-1708	94	8A
1615-731-5265	70	5	1615-763-7563	74	73
1615-738-8373	76	133			
1615-738-8374	90	13	1615-764-6420	81	
1615-738-8375	90	12	1615-764-6421	83	
1615-739-2549	92	101	1615-764-8688	75	58
1615-739-2550	92	49A	1615-764-8689	75	71
1615-739-2571	71		1615-764-8690	83	
1615-739-2575	95	114	1615-764-8700	89	113
1615-739-2575	97		1615-764-8712	89	20
1615-739-2576	95	39	1615-766-5907	88	75
1615-739-2576	98		1615-768-7497	88	37
1615-739-2580	90		1615-771-1634	75	
1615-740-3114	79	9	1615-774-8163	75	169
1615-740-3118	79	8	1615-774-8163	75	169
1615-740-6466	71	39	1615-774-8255	96	7
1615-740-6468	71	104	1615-779-3408	70	37
1615-740-6469	71	102	1615-780-4409	81	
1615-740-6470	71	106	1615-781-0887	76	101
1615-740-6472	71	96	1615-781-0888	76	98
1615-740-6474	71	99	1615-781-0889	88	37
1615-740-6476	71	20	1615-781-0889	QC1	181
1615-740-6477	71	51	1615-781-0890	75	50
1615-740-6480	71	78			
1615-740-6481	71	71	1615-781-6604	76	142C
1615-740-6482	71	3	1615-781-6605	75	
1615-740-6484	71	2A	1615-781-6606	75	
1615-754-4148	71	112A	1615-781-6607	75	
1615-755-6694	76	3	1615-781-6608	75	
1615-756-3846	88	84A	1615-781-6613	88	
1615-756-3849	88		1615-781-6613	QC1	172
1615-756-5479	69	38	1615-782-9653	70	
1615-756-5480	69	45	1615-782-9654	70	
1615-756-5482	69	44	1615-789-4973	83	299
1615-756-5487	69	37	1615-789-4974	75	79

STOCK NUMBER	FIGURE NUMBER	ITEM NUMBER
1615-789-4974	75	83
1615-789-4975	75	5A
1615-789-4980	75	5A
1615-789-4982	75	135
1615-789-4983	75	135
1615-789-5016	81	153
1615-789-5016	83	282
1615-789-7836	81	146
1615-789-7836	83	289
1615-793-0493	75	32
1615-793-0601	94	9
1615-796-4930	83	
1615-806-2158	81	88
1615-806-2174	83	151
1615-806-2185	83	283
1615-806-2187	81	134
1615-806-2187	83	295
1615-806-2193	83	138A
1615-806-2195	81	168
1615-806-2202	81	164
1615-806-2353	83	370
1615-813-0447	75	
1615-813-0449	96	12
1615-813-0543	74	72
1615-813-9226	69	
1615-813-9228	69	
1615-813-9229	69	
1615-813-9230	69	
1615-813-9231	69	
1615-816-0716	69	
1615-816-0718	69	
1615-816-0729	69	
1615-816-0732	69	
1615-816-6927	76	123A
1615-816-6927	78	
1615-816-6954	92	92A
1615-816-6967	71	
1615-826-5516	75	
1615-826-5519	75	
1615-826-5520	75	
1615-826-5521	75	
1615-826-5523	75	170
1615-826-5524	89	131
1615-827-0543	76	58C
1615-827-0602	75	
1615-827-0603	75	
1615-829-6832	83	349
1615-829-6834	83	336
1615-829-6835	83	78
1615-829-6837	83	88
1615-829-6838	83	81
1615-829-6839	83	72
1615-829-7635	83	253
1615-829-7638	81	141
1615-829-7638	83	273
1615-829-7639	83	299
1615-829-7640	83	321
1615-829-7642	83	304A
1615-829-8668	83	235
1615-829-8669	83	290
1615-830-4303	83	195
1615-830-4304	83	133A
1615-830-4306	83	225
1615-830-4308	81	20
1615-830-4310	81	170
1615-830-4314	81	86
1615-830-4316	81	30
1615-830-4316	83	116
1615-830-4317	81	176
1615-830-4318	81	90
1615-830-6708	88	67
1615-830-7927	76	89
1615-830-7927	80	
1615-830-7944	76	79A
1615-830-7946	76	82A
1615-830-7947	76	139A
1615-830-7954	76	149
1615-830-7958	76	172
1615-830-7959	76	85A
1615-830-7960	76	163
1615-830-7961	76	119C
1615-830-7963	88	37
1615-830-7968	88	57A
1615-830-9768	83	69
1615-830-9770	83	229
1615-830-9771	83	366
1615-830-9772	91	11A
1615-830-9775	92	26
1615-830-9775	92	80
1615-831-0305	69	9
1615-831-0312	71	13
1615-831-0313	71	
1615-831-0314	71	
1615-831-0317	71	68
1615-831-0318	71	68
1615-831-0319	71	69
1615-831-0320	71	52A
1615-831-0321	71	53
1615-831-0322	71	27
1615-831-0323	71	26
1615-831-0324	71	87
1615-832-8219	88	
1615-832-8363	75	86
1615-832-8365	75	
1615-832-8366	75	
1615-832-8367	75	
1615-832-8368	75	
1615-832-8369	75	
1615-832-8371	75	
1615-832-8372	75	
1615-832-8953	75	
1615-832-8954	75	
1615-837-3696	89	84
1615-837-3698	96	9
1615-839-0393	88	
1615-839-0687	76	
1615-839-0690	76	
1615-839-0696	81	
1615-841-0182	81	63
1615-841-0602	75	20A
1615-847-7460	81	
1615-848-4823	70	27
1615-848-4879	70	29
1615-848-4885	70	43
1615-849-4220	83	205
1615-849-4222	83	
1615-849-4223	83	
1615-849-4363	88	5
1615-849-4364	75	75
1615-849-4365	75	169
1615-849-4366	75	93
1615-849-4367	75	168
1615-849-4368	75	
1615-849-4369	75	
1615-849-4379	76	21A
1615-849-4379	79	
1615-849-4413	75	176

STOCK NUMBER	FIGURE NUMBER	ITEM NUMBER	STOCK NUMBER	FIGURE NUMBER	ITEM NUMBER
1615-851-2221	73	34	1615-867-8971	75	
1615-851-5489	83	350	1615-868-1085	75	
1615-855-6051	71		1615-868-1086	75	
1615-855-6052	71		1615-868-1087	75	50
1615-855-9139	81	32	1615-868-6999	75	114
1615-856-1793	93	14	1615-868-7008	81	
1615-857-3269	70	27	1615-868-8410	81	96
1615-859-6138	81	152A	1615-868-8418	81	
1615-859-6139	81	188	1615-868-9783	75	5A
		167	1615-868-9784	75	5A
1615-859-6141	81	83A	1615-869-6314	83	
1615-859-6142	81	95	1615-869-8122	88	84B
1615-859-6146	81	50	1615-869-8124	88	
1615-859-6146	83	53	1615-869-8916	88	
1615-859-6148	92	29	1615-869-8946	81	156A
1615-859-6148	92	83	1615-869-8947	81	
1615-859-6161	76	132	1615-869-8948	81	193A
1615-859-6161	92	102A	1615-869-8949	81	
1615-859-6161	92	16B	1615-870-6821	69	19
1615-859-6161	92	44B	1615-870-6821	70	11
1615-859-6161	92	58B	1615-870-6823	69	21
1615-859-6161	92	74B	1615-870-6840	69	47B
1615-859-6162	76	131A	1615-870-6840	70	33
1615-859-6162	92	102A	1615-870-6846	69	41
1615-859-6162	92	16A	1615-870-6847	69	20
1615-859-6162	92	44A	1615-870-6863	69	43
1615-859-6162	92	58A	1615-871-7300	71	
1615-859-6162	92	74A	1615-871-7302	71	104
1615-859-8056	92	33	1615-871-7303	71	
1615-859-8056	92	87	1615-872-1212	92	66A
1615-859-8057	81	24	1615-872-1213	92	11A
1615-862-3669	76	30A	1615-873-2283	69	46
1615-862-3682	75	5A	1615-873-7420	75	
1615-862-9126	93	13	1615-873-7421	75	
1615-862-9127	91	16	1615-873-7422	75	
1615-862-9128	81	163	1615-873-7423	75	
1615-862-9128	91	24	1615-873-7424	75	
1615-862-9130	91	28	1615-873-7425	75	
1615-862-9131	91	29	1615-875-9742	75	108
1615-862-9132	91	21	1615-875-9748	81	
1615-862-9144	73	61	1615-875-9753	81	
1615-862-9148	73	66	1615-875-9764	83	235
1615-862-9149	73	30	1615-875-9771	81	193A
1615-862-9151	73	39	1615-875-9772	81	156A
1615-862-9152	73	59	1615-877-9106	83	
1615-862-9154	72	21	1615-878-5591	73	33
1615-862-9154	72	52	1615-885-3575	71	46
1615-862-9154	73	23	1615-885-3576	71	45
1615-862-9155	73	65	1615-885-3577	71	47
1615-862-9156	73	52	1615-886-1318	73	47
1615-862-9159	72	12	1615-886-3367	76	170A
1615-862-9192	76	101	1615-886-3368	76	157B
1615-862-9193	76	99	1615-886-3373	76	146
1615-862-9194	76	100	1615-889-7149	91	23
1615-862-9195	76	158	1615-890-2758	75	
1615-862-9201	90	14A	1615-891-3089	73	61H
1615-862-9202	90	14B	1615-891-4630	70	
			1615-891-4631	70	
1615-862-9289	76	22	1615-891-4634	70	36
1615-863-1128	72	33	1615-891-4635	70	36
1615-863-1128	72	64	1615-891-4639	70	24
1615-863-1128	73	9	1615-891-4640	70	24
1615-865-7910	83	77	1615-891-4647	70	35
1615-866-5997	95	39	1615-891-4648	70	35
1615-866-5997	98		1615-891-6465	69	
1615-866-5999	95	114	1615-891-8308	70	14
1615-866-5999	97		1615-891-8371	70	12
1615-866-6007	75	151	1615-893-0891	75	106
1615-866-6043	72	11	1615-893-4544	71	82
1615-867-1235	94	15	1615-895-5396	81	36A
1615-867-5470	75	32	1615-895-5396	96	

STOCK NUMBER	FIGURE NUMBER	ITEM NUMBER	STOCK NUMBER	FIGURE NUMBER	ITEM NUMBER
1615-895-9361	88	54	1615-906-3907	71	
1615-895-9363	88	72	1615-906-7550	73	39
1615-895-9388	88	78	1615-906-8031	88	
1615-895-9394	88	71	1615-906-9708	69	17
1615-895-9396	88	38	1615-907-0848	83	
1615-895-9396	88	77	1615-907-8397	76	
1615-895-9408	83	356	1615-908-0366	91	
1615-895-9409	83	265	1615-908-0367	91	
1615-895-9410	83	274	1615-909-0908	83	
1615-895-9412	83	322	1615-909-7057	92	103
1615-895-9413	83	343	1615-911-7690	81	
1615-895-9415	83	326	1615-911-8619	88	
1615-895-9431	83	220	1615-915-6092	71	59
1615-895-9434	80	9	1615-915-8886	81	
1615-895-9434	87	34	1615-915-8887	81	96
1615-895-9435	83	77	1615-915-8896	83	216
1615-895-9437	87	35	1615-915-8957	83	
1615-895-9438	83	46	1615-916-2438	90	6
1615-895-9439	83	45	1615-916-2576	90	7
1615-895-9440	83	47	1615-918-4224	94	6
1615-895-9443	83	160	1615-918-4224	11C	25
1615-895-9444	83	161	1615-919-1354	71	
1615-895-9445	83	54	1615-919-1355	71	112
1615-895-9453	83	345	1615-919-1356	71	111
1615-895-9454	83	148	1615-919-1357	71	13
1615-895-9455	83	193	1615-919-2606	75	32
1615-895-9456	83	43	1615-919-4632	95	20
1615-895-9458	83	10	1615-919-4632	95	25
1615-895-9458	83	19	1615-919-7321	73	28
1615-895-9459	83	188	1615-919-9252	81	25A
1615-895-9463	83	87	1615-922-5807	70	5
1615-895-9464	83	68	1615-922-8266	88	
1615-895-9464	83	71	1615-922-8267	88	
1615-895-9464	83	84	1615-923-0309	88	24B
1615-895-9465	83	76	1615-923-0621	88	42
1615-895-9467	83	159	1615-923-0622	88	28B
1615-895-9468	83	182	1615-923-0623	88	46A
1615-896-6247	83	118	1615-923-0624	88	47C
1615-898-0095	75	75	1615-923-2764	88	
1615-898-0096	75	73	1615-923-2765	88	47C
1615-898-0104	75	107	1615-923-4035	88	45
			1615-923-4041	88	41
1615-898-0107	75	30	1615-923-4093	88	23
1615-898-0109	75	8	1615-923-5112	88	
1615-900-8501	69	9	1615-923-5115	69	46
1615-900-8502	69		1615-923-5116	88	74
1615-900-8503	69		1615-923-9048	88	76
1615-900-8504	69		1615-923-9052	88	47C
1615-900-8505	69		1615-924-6095	83	235
1615-901-1823	248	70	1615-924-7069	75	58
1615-902-3318	69		1615-925-6919	72	25
1615-902-3319	69		1615-925-6919	72	56
1615-902-3320	69		1615-925-6919	73	3
1615-902-3321	69		1615-925-7064	75	150
1615-902-3322	69		1615-925-7064	75	161
1615-902-3325	69		1615-925-7064	75	185
1615-902-4439	75	173	1615-925-7064	75	193
1615-902-4454	75	71	1615-929-0942	11	82A
1615-902-5005	83		1615-929-5808	88	
1615-906-1278	69	42	1615-929-5809	81	
1615-906-1279	69	42	1615-929-5810	83	
1615-906-1280	69	42	1615-930-5484	88	
1615-906-1281	69	42	1615-931-7080	93	1
1615-906-1282	69	42	1615-931-7080	94	
1615-906-1283	69	42	1615-932-5147	88	
1615-906-1284	69	42	1615-932-5148	88	
1615-906-1286	69	42	1615-932-5149	88	84A
1615-906-3899	71	143	1615-932-7689	83	202A
1615-906-3900	71	137	1615-936-9274	83	21G
1615-906-3901	71	141	1615-936-9275	83	21I
1615-906-3906	71	132	1615-937-7666	92	38A

STOCK NUMBER	FIGURE NUMBER	ITEM NUMBER	STOCK NUMBER	FIGURE NUMBER	ITEM NUMBER
1615-939-5943	71	144	1615-957-6675	76	176A
1615-939-7209	71	63	1615-957-6676	76	35
1615-939-7535	83		1615-958-4491	79	24
1615-939-7756	76	65	1615-958-6502	81	25
1615-939-7770	76		1615-960-3965	91	
1615-939-7771	76	57A	1615-960-3969	91	15
1615-939-8833	71	82	1615-960-3970	91	16A
1615-940-0762	71	62	1615-960-8894	91	
1615-940-7061	75	20A	1615-960-8895	92	66A
1615-940-7139	75	20A	1615-960-8896	91	23
1615-940-8216	83	102	1615-961-1324	88	75
1615-940-8217	83	96A	1615-961-1325	88	47A
1615-941-4269	75	91	1615-961-4387	75	20A
1615-941-8730	71	91A	1615-961-5811	92	11A
1615-944-0630	81		1615-962-0069	79	14
			1615-963-0956	81	16C
			1615-963-0957	81	212
			1615-963-0959	81	68
			1615-963-0959	83	206
			1615-963-0960	81	70
1615-944-4872	76		1615-963-0960	83	204
			1615-964-0334	69	22
1615-944-7282	91		1615-966-7564	81	11
1615-944-7283	91		1615-966-9373	95	131
1615-945-0191	83		1615-966-9374	95	36
			1615-966-9375	95	35
1615-945-8192	88	80	1615-966-9376	76	16
1615-945-8617	88	50A	1615-967-9759	71	91A
1615-946-7872	88		1615-968-7816	75	20A
1615-946-7873	88	82	1615-969-3973	81	148
			1615-969-3974	81	
1615-948-6551	71	116	1615-975-0465	81	
1615-950-1710	83	348	1615-978-2155	18	
1615-950-1718	83	65	1615-978-2155	95	153
1615-950-1718	87		1615-979-3697	75	20A
1615-950-6922	69	40	1615-979-7530	95	129
1615-950-6923	69	40	1615-979-7531	95	128
1615-950-6924	69	36	1615-979-7553	95	30
1615-950-6925	83	343	1615-979-7560	83	
1615-950-6928	83	347	1615-980-9398	75	58
1615-950-6929	83		1615-980-9400	75	71
1615-950-6959	83	344	1615-980-9401	75	122
1615-951-0366	75	71	1615-980-9402	75	135
1615-951-0368	75	58	1615-980-9404	75	132
1615-952-7213	69	46	1615-980-9405	75	
1615-953-0221	76	98	1615-980-9408	75	127
1615-953-0222	76	97	1615-981-3030	73	42
1615-953-0223	88	17	1615-981-3037	71	32
1615-953-2359	81	58A	1615-981-3039	18	
1615-953-2365	79	25	1615-981-3039	81	12
1615-953-2366	79	3	1615-981-3039	95	152
1615-953-2367	79	22	1615-981-3040	18	
1615-953-2369	79	14	1615-981-3040	95	151A
1615-953-2382	79	17	1615-982-8597	76	121A
1615-953-4943	75	20A	1615-982-9967	81	164
1615-953-4968	79	6	1615-982-9969	71	
1615-955-9564	71	60	1615-982-9970	71	
1615-955-9564	71	60A	1615-983-7250	71	
1615-955-9570	76	161A	1615-983-7306	71	
1615-955-9572	71	61	1615-984-5550	71	20
1615-955-9572	71	61A	1615-986-6041	71	26A
1615-955-9573	76	155	1615-986-6044	71	27A
1615-955-9573	76	166	1615-986-6104	71	21E
1615-955-9574	71		1615-986-6122	71	34
1615-955-9575	83	36	1615-987-7499	88	47C
1615-955-9576	83	37	1615-987-7500	88	34
1615-956-9913	83	123	1615-987-7526	95	32
1615-956-9915	83		1615-987-7527	95	31
1615-956-9916	83	96A	1615-987-7536	81	
1615-956-9971	92	52A	1615-987-9516	71	21C
1615-957-6674	76	34	1615-987-9553	95	17

STOCK NUMBER	FIGURE NUMBER	ITEM NUMBER	STOCK NUMBER	FIGURE NUMBER	ITEM NUMBER
1615-987-9554	95	16	1620-869-2416	45	10B
1615-987-9557	71	41A	1620-869-2418	45	10
1615-987-9558	75	122	1620-869-2418	54	1
1615-990-2957	88	9	1620-869-2420	45	
1615-990-3093	93	1	1620-869-2421	45	11B
1615-991-3259	76	68	1620-869-8140	45	15
1615-991-8537	76	40A	1620-869-8140	49	
1615-991-8544	71	21	1620-871-8691	45	29
1615-992-4606	76	129	1620-872-6115	49	25
1615-992-4609	88	85	1620-872-6116	49	8
1615-992-4610	88	86	1620-872-6117	49	52
1615-994-1123	70	41	1620-872-6118	49	43
1615-994-1124	70	42	1620-872-6119	49	54
1615-994-1125	70	8	1620-872-6120	49	11
1615-994-1126	70	9	1620-872-6121	49	38
1615-994-9073	81		1620-872-7888	49	44
1615-994-9149	71		1620-872-7889	49	55
1615-994-9150	71		1620-872-7890	49	1
1615-995-2494	70	34	1620-872-7892	49	36
1615-995-2495	70		1620-872-7893	49	13B
1615-995-2496	70		1620-883-1668	49	62
1615-995-7982	79	23	1620-885-8685	51	
1615-996-3900	81	43	1620-885-8687	51	19A
1615-996-3900	82		1620-885-8688	51	19
1615-996-3902	76	123A	1620-885-8690	51	8
1615-996-3902	78		1620-885-8691	51	64
1615-996-3935	83	350	1620-885-8694	49	34
1615-996-3937	91	11A	1620-885-8694	51	24
1615-996-7418	91		1620-886-1378	51	60
1615-999-8568	75		1620-886-1379	51	16
1615-999-8569	75		1620-886-1380	51	4
1620-010-7850	54		1620-887-6137	44	23
1620-010-7850	KITS		1620-887-6138	44	17
1620-010-7852	51		1620-887-6138	53	
1620-010-7852	KITS		1620-887-6141	44	22B
1620-021-4611	11B	72	1620-887-6144	53	26
1620-065-8729	59	16B	1620-887-6145	53	25
1620-073-9788	44	26	1620-887-6145	54	31
1620-073-9788	59		1620-887-6148	44	19
1620-074-1194	59	16A	1620-887-6155	59	2
1620-076-9048	59	16F	1620-887-6157	59	26
1620-077-2456	52	8	1620-887-6158	59	31
1620-078-0753	11B	72	1620-902-5319	47	13
1620-105-8358	275		1620-903-0252	182	67
1620-107-4529	45	12A	1620-903-0252	184	
1620-120-0559	11B	72	1620-906-1266	49	64
1620-133-6934	45	32	1620-906-1313	51	
1620-133-6934	49	35	1620-906-1313	KITS	
1620-135-0295	45	14A	1620-906-1316	45	
1620-462-8858	51	50	1620-906-1316	KITS	
1620-813-9340	52	8	1620-906-1317	49	
1620-816-0741	53		1620-906-1317	KITS	
1620-867-1247	49	59	1620-906-1318	49	
1620-867-1247	51	67	1620-906-1319	54	
1620-867-5489	51	4	1620-906-1320	54	
1620-867-5490	51		1620-906-1320	KITS	
1620-867-5493	51		1620-906-1322	51	
1620-867-8939	49	60	1620-906-1322	KITS	
1620-867-8939	51	71	1620-910-1573	184	
1620-867-8941	51	60	1620-932-5182	45	29
1620-867-8943	51	76	1620-932-5183	45	29A
1620-868-5761	43	15	1620-939-8153	184	25
1620-868-5761	51		1620-939-9768	49	45
1620-868-6970	51		1620-941-8774	45	29G
1620-868-9791	45		1620-956-9967	44	26
1620-868-9792	45		1620-956-9967	59	
1620-868-9793	45		1620-956-9968	44	17
1620-868-9794	45	12	1620-956-9968	53	
1620-868-9796	54	12	1620-973-1274	43	15
1620-868-9797	54	7	1620-973-1274	51	
1620-868-9798	54	46	1620-973-4968	59	37

STOCK NUMBER	FIGURE NUMBER	ITEM NUMBER
1620-976-9326	53	9
1620-980-1857	59	
1620-980-1857	KITS	
1620-980-1860	53	
1620-980-1860	KITS	
1620-980-1861	59	
1620-980-1861	KITS	
1620-980-1863	53	
1620-980-1863	KITS	
1620-986-0417	51	
1620-986-0417	KITS	
1620-987-7520	44	26
1620-987-7520	59	
1630-018-0160	57	11
1630-018-0161	57	7
1630-018-0162	58	1
1630-018-0163	58	3
1630-056-2329	110	15
1630-056-2329	223	45
1630-056-2329	224	1
1630-065-6911	100	1
1630-065-7574	100	19
1630-070-2706	110	48
1630-070-2706	111	
1630-098-1994	57	5
1630-179-1383	43	14
1630-179-1383	45	8D
1630-179-1383	57	
1630-237-3030	223	46
1630-254-6583	57	2
1630-370-8440	60	41
1630-370-8440	61	43
1630-420-9183	268	120
1630-483-8434	60	45
1630-483-8434	61	47
1630-483-8436	60	44
1630-483-8436	61	46
1630-516-8438	57	14
1630-516-8438	58	13
1630-516-8438	111	14
1630-565-8537	60	26
1630-565-8551	60	38
1630-565-8551	61	40
1630-689-4917	61	27
1630-689-4933	61	8
1630-689-4934	61	32
1630-689-4935	60	30
1630-752-9798	43	14
1630-752-9798	45	8D
1630-752-9799	44	13
1630-752-9799	58	
1630-758-4766	60	4
1630-758-4838	60	7
1630-758-4841	61	28
1630-758-4866	60	19
1630-781-0350	61	25
1630-790-2337	60	47
1630-790-2337	61	49
1630-819-4623	43	14
1630-819-4623	45	8D
1630-819-4623	57	
1630-819-9957	43	10
1630-819-9957	55	
1630-889-7264	111	6
1630-890-2776	111	12
1630-890-2777	111	7
1630-899-5783	57	15
1630-899-5783	58	14
1630-907-9687	56	1
1630-912-3166	43	16
1630-912-3166	60	
1630-912-3167	45	33
1630-912-3167	61	
1630-912-3168	43	
1630-912-3169	44	
1630-922-9078	43	10
1630-922-9078	45	68
1630-922-9078	50	
1630-939-5685	50	13
1630-939-5685	55	16
1630-975-0180	224	42
1630-975-0182	224	43
1630-977-1851	224	36
1630-977-2454	224	10
1630-983-0075	224	40
1630-985-2868	224	22
1630-986-5929	44	9
1630-986-5929	56	
1630-986-6055	224	39
1630-987-9788	57	1
1630-987-9790	58	10
1630-987-9791	58	2
1650-011-0843	65	71
1650-011-0844	65	67
1650-011-0846	65	62
1650-011-0851	137	34
1650-011-0852	137	39
1650-011-0853	137	19
1650-011-0853	137	41
1650-011-9062	222	171
1650-013-3541	153	19
1650-013-3590	125	37
1650-013-3761	65	33
1650-013-3816	122	5
1650-013-3836	122	27
1650-013-4134	137	44
1650-013-4149	133	34
1650-013-4264	142	5
1650-014-0309	149	1
1650-014-0312	63	116
1650-014-0313	138	58
1650-014-1786	123	16
1650-014-1787	123	4
1650-014-1791	125	17
1650-014-1793	125	19
1650-014-1795	125	26
1650-014-1803	146	4
1650-014-1806	146	28
1650-014-1807	132	4
1650-014-1807	146	10
1650-015-2259	123	10
1650-015-2260	123	3
1650-015-2261	123	10
1650-015-2262	123	3
1650-015-2263	153	8
1650-015-2265	125	12
1650-015-2266	125	28
1650-015-2267	125	32
1650-015-2268	125	48
1650-015-2269	125	36
1650-018-0054	102	
1650-018-0054	244	46
1650-018-9359	146	25
1650-019-2646	124	26
1650-019-2646	124	49
1650-019-3058	138	
1650-019-3059	138	73
1650-019-3060	138	
1650-021-5588	124	52
1650-021-5589	124	32

STOCK NUMBER	FIGURE NUMBER	ITEM NUMBER	STOCK NUMBER	FIGURE NUMBER	ITEM NUMBER
1650-021-8277	138	73	1650-083-1283	134	65
1650-021-8278	138	48			
1650-021-9085	273	13	1650-089-1253	123	5
1650-021-9085	274		1650-089-1254	123	8
1650-022-5290	138	63	1650-089-3977	139	53
1650-022-5304	138	66	1650-091-6690	145	23
1650-022-5310	138	7	1650-101-7836	65	84
1650-022-5326	138	44	1650-101-7847	65	86
1650-022-5329	138	69	1650-101-7848	65	88
1650-024-9665	262	54A	1650-103-0482	65	51
1650-033-9160	149	33	1650-104-9293	65	87
1650-034-3674	83	28	1650-105-6258	228	101B
1650-034-3674	138		1650-106-7918	146	33
1650-034-3723	129	12			
1650-034-3723	130		1650-111-6821	72	
1650-034-6501	64	15	1650-115-4828	103	30
1650-037-8944	135	13	1650-115-4853	103	57
1650-050-8349	129	51	1650-115-4858	103	55
1650-050-8349	137		1650-115-4860	102	64
1650-050-8749	102				
1650-050-8749	222	52			
1650-053-2627	123		1650-116-7127	118	
1650-055-7586	119	393	1650-116-7130	102	62
1650-055-7587	117	82	1650-116-7131	102	63
1650-055-7587	129	94	1650-117-2985	102	
1650-056-2339	112	47	1650-117-2985	244	46
1650-056-2339	113		1650-117-2986	103	
1650-061-6125	103	30	1650-117-2986	222	171
1650-066-5275	72	76	1650-117-2986	222	90
1650-066-5275	74		1650-117-2987	103	
1650-069-6271	102		1650-117-2987	244	61
1650-069-6271	244	46	1650-117-2990	103	56
1650-070-1136	74	48	1650-133-6064	102	
1650-071-0864	102	64	1650-133-6064	222	157
1650-071-4177	135	20	1650-133-6065	102	
1650-071-8253	102	44	1650-133-6065	222	157
1650-071-8253	103	37	1650-133-6261	102	
1650-071-8254	102	26	1650-133-6261	222	52
1650-071-8254	103	22B	1650-133-6262	103	
1650-071-8255	102	24	1650-133-6262	244	61
1650-071-8255	103	22	1650-133-6263	103	
1650-071-8256	102		1650-133-6263	222	90
1650-071-8256	103		1650-133-6264	103	
1650-072-2228	126	6	1650-133-6264	244	61
1650-072-2228	128		1650-133-6265	103	
1650-072-2229	126	6	1650-133-6265	222	90
1650-072-2229	128		1650-133-6266	102	
1650-072-2233	126	5	1650-133-6266	244	46
1650-072-2233	128	25	1650-133-6267	102	
1650-072-2234	128	9	1650-133-6267	244	46
1650-072-2237	128		1650-133-6268	102	37D
1650-072-4875	119	270	1650-133-6270	102	
1650-072-4875	146		1650-133-6270	222	52
1650-072-6091	137	14	1650-133-6962	102	
1650-072-8931	121	8	1650-133-6962	244	46
1650-072-8932	121	6	1650-134-1057	102	
1650-072-8933	121	9	1650-134-1057	222	157
1650-072-8935	128	42	1650-134-1057	222	52
1650-072-8937	128	36	1650-135-2584	222	
1650-072-8939	128	40	1650-135-2584	222	212
1650-073-8393	73	30	1650-135-2584	244	
1650-075-2248	125		1650-135-2584	KITS	
1650-075-2248	KITS		1650-136-5012	148	14
1650-075-2250	120	16	1650-136-5017	119	82
1650-075-2251	120	9	1650-136-5017	156	
1650-075-2255	122	45	1650-167-4814	145	8
1650-075-2255	130	30	1650-167-8141	228	101A
1650-075-2256	122	50	1650-167-8141	228	101B
1650-078-4757	129	12	1650-167-8181	102	
1650-078-4757	130		1650-167-8181	222	52
1650-083-1278	134	8	1650-167-8182	102	

STOCK NUMBER	FIGURE NUMBER	ITEM NUMBER	STOCK NUMBER	FIGURE NUMBER	ITEM NUMBER
1650-167-8182	222	52	1650-329-8353	108	3
1650-167-8185	102		1650-339-2387	134	56
1650-167-8185	222	52	1650-339-2388	134	5
1650-167-8186	102		1650-339-2389	134	9
1650-167-8186	244	46	1650-339-2391	134	11
1650-167-8187	102		1650-339-2397	134	58
1650-167-8187	244	46	1650-339-2398	134	62
1650-167-8188	103		1650-339-2399	134	78
1650-167-8188	244	61	1650-340-0560	145	16
1650-167-8189	103		1650-340-0561	145	17
1650-167-8189	222	90	1650-349-9987	133	
1650-167-8190	103		1650-371-0139	266	33
1650-167-8190	244	61	1650-373-7695	216	40
1650-167-8191	103		1650-390-8153	119	374
1650-167-8191	222	90	1650-390-8153	145	
1650-167-8192	103		1650-397-5903	262A	8
1650-167-8192	244	61	1650-404-0858	132	17
1650-167-8193	103		1650-404-0858	146	22
1650-167-8193	222	90	1650-410-5930	72	97
1650-168-5525	103		1650-410-5930	74	8
1650-168-5525	244	61	1650-442-6211	103	
1650-169-6913	228	101B	1650-442-6211	222	171
1650-169-6914	228	101B	1650-442-6217	102	
1650-176-1026	73	30	1650-442-6217	222	157
1650-176-1077	103		1650-442-6219	102	
1650-176-1077	222	171	1650-442-6219	244	46
1650-179-4264	103		1650-443-1136	102	7H
1650-179-4264	244	61	1650-443-1136	103	6F
1650-179-6133	102		1650-454-8901	274	4
1650-179-6133	244	46	1650-456-1953	73	44F
1650-179-6134	102		1650-456-1954	73	44F
1650-179-6134	222	52	1650-463-7637	149	86
1650-181-3543	72	17	1650-474-4738	138	6
1650-181-3543	72	45	1650-476-5557	140	10
1650-181-3543	73		1650-476-5559	140	8
1650-181-3544	72	17	1650-481-3119	150A	18
1650-181-3544	72	45	1650-484-0971	134	7
1650-181-3544	73		1650-486-4241	154	20
1650-181-3545	72	17	1650-486-4279	154	24
1650-181-3545	72	45	1650-497-7296	139	42
1650-181-3545	73		1650-497-7296	139	42
1650-197-1783	139	53	1650-511-1359	113	6
1650-221-9461	74	63A	1650-511-1360	113	4
1650-221-9462	72	76	1650-511-1361	113	10
1650-221-9462	74		1650-512-1670	133	60
1650-221-9464	102	7G	1650-512-1702	144	2
1650-221-9464	103	6E	1650-513-5435	144	8
1650-222-9250	134	66	1650-529-8485	272	43
1650-223-5002	124	74	1650-554-6323	47	18
1650-225-5115	228	101A	1650-565-8549	60	24
1650-226-6273	228	101A	1650-565-9684	124	
1650-226-6273	228	101B	1650-565-9684	133	
1650-229-2963	102	37D	1650-566-3331	153	7
1650-229-6676	156	13	1650-572-4472	149	76
1650-231-8137	73	41	1650-572-4477	149	77
1650-231-8137	73	43	1650-572-4479	153	
1650-231-8139	73	42	1650-572-4479	KITS	
1650-231-8139	73	44	1650-572-4480	149	73
1650-235-4539	74		1650-572-4481	149	102
1650-251-8724	72	90	1650-572-4481	274	66
1650-251-8724	74	1	1650-572-4483	149	80
1650-251-8725	72	91	1650-572-4484	149	95
1650-251-8725	74	2	1650-572-4486	153	
1650-252-2340	52	1A	1650-572-4486	KITS	
1650-254-6582	146	2A	1650-573-6508	130	
1650-294-1391	51	59	1650-573-6508	KITS	
1650-313-5981	154	18	1650-573-6514	130	
1650-329-8025	108	6	1650-573-6514	KITS	
1650-329-8220	108		1650-587-4681	272	51
1650-329-8220	119	360	1650-593-4780	149	63
1650-329-8353	107	8	1650-593-4785	149	49

STOCK NUMBER	FIGURE NUMBER	ITEM NUMBER	STOCK NUMBER	FIGURE NUMBER	ITEM NUMBER
1650-593-4833	149	53	1650-739-2599	121	
1650-593-4834	123	13	1650-739-2602	119	156
1650-604-0951	102		1650-739-2602	120	1
1650-604-0951	244	46	1650-739-2605	112	75
1650-606-3103	124	6	1650-739-2605	116	16
1650-609-9880	133	21	1650-739-2605	119	149
1650-609-9881	133		1650-739-2605	119	46
1650-610-1332	133	28	1650-739-2605	129	25
1650-620-8065	154	25	1650-739-2605	129	80A
1650-640-8490	119	393	1650-739-2605	152	
1650-647-1708	273	13	1650-739-2606	119	294
1650-652-4995	145		1650-739-2606	122	
1650-652-4995	KITS		1650-739-2615	21	58
1650-654-6337	145		1650-739-2626	62	33
1650-654-6337	KITS		1650-739-2635	119	123
1650-658-2622	119		1650-739-2635	125	
1650-658-2622	KITS		1650-753-4082	265	81
1650-674-3713	144	9	1650-753-4082	268	23
1650-676-1629	149	81	1650-755-6685	139	40
1650-676-1633	125	8	1650-755-6685	139	88
1650-688-8526	134	72	1650-755-6685	141	
1650-688-8527	134	67	1650-756-1046	22	40
1650-691-2957	109	58	1650-756-1046	154	
1650-691-2957	109	61	1650-756-2802	119	393
1650-691-2957	119	226	1650-756-2803	119	393
1650-691-2957	128		1650-756-2803	155	
1650-691-2993	109	13	1650-756-2807	272	31
1650-691-2993	109	54	1650-757-4478	132	15
1650-691-2993	119	328	1650-757-4478	146	21
1650-691-2993	128		1650-757-4486	132	18
1650-691-3026	117	70	1650-757-4486	146	23
1650-691-3026	129	151	1650-757-7146	134	
1650-691-3026	133		1650-757-7146	KITS	
1650-691-3044	117		1650-758-9762	119	82
1650-691-3044	129		1650-758-9762	124	
1650-691-3045	117	70	1650-758-9786	134	7
1650-691-3045	129	151	1650-759-2872	134	38
1650-698-6501	133	43	1650-759-2874	134	22
1650-716-1865	133	69	1650-759-2875	134	16
1650-716-3453	124	9	1650-759-9081	111	10
1650-716-8613	119	31	1650-760-3938	61	22
1650-716-8614	112	39	1650-762-0036	228	101A
1650-717-8588	137	16	1650-763-1021	149	54
1650-717-8589	137	27	1650-763-1023	112	75
1650-717-8590	137	29	1650-763-1023	116	16
1650-717-8592	137	8	1650-763-1023	119	149
1650-717-8599	137	34	1650-763-1023	119	46
1650-723-0294	133	35	1650-763-1023	129	25
1650-723-0295	133	37	1650-763-1023	129	80A
1650-723-0296	133	38	1650-763-1023	152	
1650-723-0297	133		1650-763-1057	149	58
1650-723-0298	133	50	1650-763-1061	140	4
1650-723-0301	133		1650-763-1061	141	16
1650-723-0302	133	19	1650-763-1062	140	6
1650-723-0306	133	68	1650-763-1062	141	19
1650-723-0307	133	71	1650-764-8674	72	76
1650-723-5783	132	13	1650-764-8674	74	
1650-723-5783	146	19	1650-766-7193	265	110
1650-723-8078	153	17	1650-766-7193	268	114
1650-725-5787	137	17	1650-766-7194	265	113
1650-727-4571	272	32	1650-766-7194	268	117
1650-727-4613	272	59	1650-774-8281	272	21
1650-727-4617	272	60	1650-774-8386	109	58
1650-728-8404	265	6	1650-774-8386	109	61
1650-728-8404	267		1650-774-8386	119	226
1650-728-8404	268	5A	1650-774-8386	126	
1650-731-0593	124	16	1650-774-8388	109	13
1650-731-1570	119	270	1650-774-8388	109	54
1650-731-1570	127		1650-774-8388	119	328
1650-736-3607	267	52	1650-774-8388	126	
1650-739-2599	119	92	1650-780-2394	272	20

STOCK NUMBER	FIGURE NUMBER	ITEM NUMBER
1650-780-2395	272	16
1650-781-0354	244	46
1650-781-0356	244	61
1650-783-3650	266	36
1650-788-5836	154	
1650-793-0430	265	6
1650-793-0430	266	
1650-793-0430	268	5A
1650-793-0633	141	10
1650-794-2550	117	70
1650-794-2550	129	151
1650-794-2648	141	3
1650-796-5026	62	33
1650-796-5026	64	
1650-796-5026	QC1	25
1650-798-6224	153	2
1650-802-4843	262	54
1650-806-2173	83	14
1650-806-2173	134	
1650-824-0853	102	37D
1650-827-0606	72	17
1650-827-0606	72	45
1650-827-0606	73	
1650-827-0607	72	17
1650-827-0607	72	45
1650-827-0607	73	
1650-827-0614	228	138
1650-829-7750	102	45
1650-829-7750	103	38
1650-831-0450	266	44
1650-832-0389	222	157
1650-833-1601	122	14
1650-834-1430	265	6
1650-834-1430	266	
1650-834-1430	268	5A
1650-847-7428	140	1
1650-847-7428	141	2
1650-848-4972	222	90
1650-848-4979	244	61
1650-848-4990	244	61
1650-853-8464	139	53A
1650-854-8851	122	48
1650-855-6072	73	63
1650-855-6090	102	63
1650-855-6090	103	56
1650-855-6091	102	62
1650-855-6091	103	55
1650-857-2386	129	51
1650-857-3278	222	52
1650-857-3279	244	46
1650-857-3280	222	90
1650-857-3281	72	17
1650-857-3281	72	45
1650-857-3281	73	
1650-857-3282	72	17
1650-857-3282	72	45
1650-857-3282	73	
1650-859-3987	154	27
1650-859-9720	153	16
1650-862-9284	76	135A
1650-865-7964	102	
1650-865-7964	244	46
1650-865-7967	102	
1650-865-7967	222	157
1650-865-7967	222	52
1650-865-7970	103	
1650-865-7970	222	171
1650-865-7970	222	90
1650-865-7971	103	
1650-865-7971	244	61
1650-865-8077	129	51
1650-865-8077	137	
1650-866-6870	222	155
1650-866-6870	222	42
1650-866-6870	244	32
1650-866-6873	244	31
1650-866-8142	134	74
1650-867-6315	134	51
1650-869-7592	140	2
1650-869-7592	141	14
1650-869-8619	152	
1650-869-8619	156	5
1650-870-6853	107	9
1650-870-6854	107	1
1650-872-7931	152	10
1650-872-7931	156	10
1650-873-7615	73	41
1650-873-7615	73	44
1650-873-7617	73	42
1650-873-7617	73	43
1650-874-3740	125	41
1650-876-7565	138	47
1650-876-7566	138	45
1650-876-8773	103	57
1650-876-8780	102	44
1650-876-8780	103	37
1650-877-3370	148	18A
1650-877-3372	148	22A
1650-880-4138	117	82
1650-880-4138	129	94
1650-880-4138	155	
1650-880-4139	119	393
1650-884-5322	270	22
1650-884-5322	272	
1650-887-1979	148	
1650-888-3723	63	71
1650-889-1227	103	
1650-889-1227	222	171
1650-890-7682	111	5
1650-891-3212	142	7
1650-894-5022	63	51
1650-894-5023	63	48
1650-894-5026	149	
1650-894-5109	63	35
1650-898-8595	136	4
1650-898-8599	136	20
1650-898-9530	64	3
1650-899-1866	149	9
1650-899-1866	274	57
1650-900-3319	64	14
1650-903-3755	QC1	109
1650-903-3755	QC1	121
1650-903-3755	109	33
1650-903-3755	109	36
1650-903-3755	117	94
1650-903-3755	119	229
1650-903-3755	119	320
1650-903-3755	119	359
1650-903-3755	129	135
1650-903-3755	129	70A
1650-903-3755	139	12
1650-903-3755	143	22
1650-904-9956	102	538

STOCK NUMBER	FIGURE NUMBER	ITEM NUMBER
1650-906-0284	45	29B
1650-906-0284	52	
1650-906-2800	153	
1650-906-5352	73	18A
1650-906-5354	73	39A
1650-906-5357	137	5
1650-907-1796	45	17A
1650-907-1796	47	
1650-907-1797	47	12
1650-907-1798	47	19
1650-907-1799	108	
1650-907-1799	119	360
1650-907-6204	47	
1650-907-6204	KITS	
1650-907-6206	155	
1650-907-6206	KITS	
1650-907-6207	155	
1650-907-6207	KITS	
1650-907-6208	155	7
1650-907-7848	47	
1650-907-7848	KITS	
1650-907-7849	155	7
1650-909-0001	65	56
1650-912-4580	222	90
1650-912-4581	244	61
1650-913-4129	148	30
1650-913-4287	109	77
1650-913-4287	153	
1650-914-3436	129	29
1650-914-3436	140	
1650-916-2648	222	90
1650-916-2649	244	61
1650-917-3850	148	8
1650-920-3613	95	177
1650-920-3614	95	175
1650-921-5012	109	13
1650-921-5012	109	54
1650-921-5012	119	328
1650-921-5012	128	
1650-921-5013	109	58
1650-921-5013	109	61
1650-921-5013	119	226
1650-921-5013	128	
1650-922-5825	102	
1650-922-5825	244	46
1650-922-5826	102	
1650-922-5826	222	52
1650-922-5827	103	
1650-922-5827	244	61
1650-922-5828	103	
1650-922-5828	244	61
1650-922-5829	103	
1650-922-5829	222	90
1650-922-5830	103	
1650-922-5830	222	90
1650-922-5831	102	
1650-922-5831	244	46
1650-922-5832	102	
1650-922-5832	222	157
1650-922-5832	222	52
1650-923-3866	126	1
1650-923-3866	128	14
1650-927-7421	138	34
1650-928-3473	102	59
1650-928-3721	144	1
1650-929-8507	21	5B
1650-929-8508	21	5B
1650-929-8509	148	27
1650-930-6122	109	58
1650-930-6122	109	61
1650-930-6122	119	226
1650-930-6122	128	
1650-930-6123	109	58
1650-930-6123	109	61
1650-930-6123	119	226
1650-930-6123	142	
1650-930-6124	109	13
1650-930-6124	109	54
1650-930-6124	119	328
1650-930-6124	128	
1650-930-6125	109	13
1650-930-6125	109	54
1650-930-6125	119	328
1650-930-6125	142	
1650-930-7084	126	
1650-930-7084	128	
1650-930-7084	KITS	
1650-930-7085	126	
1650-930-7085	128	
1650-930-7085	KITS	
1650-932-5186	135	18
1650-941-0387	140	19
1650-941-8785	140	20
1650-941-8786	135	
1650-941-8790	140	27
1650-942-7581	102	45
1650-942-7581	103	38
1650-942-7582	149	4
1650-942-7582	274	6
1650-944-4437	119	378
1650-944-7304	120	4
1650-944-7305	132	20
1650-944-7306	132	29
1650-945-0923	265	6
1650-945-0923	268	5A
1650-948-0968	135	14
1650-948-0968	148	
1650-949-0560	149	25
1650-955-9608	151	6
1650-955-9612	151	3
1650-955-9614	83	28
1650-955-9614	138	
1650-955-9615	122	
1650-955-9615	KITS	
1650-955-9616	122	
1650-955-9616	KITS	
1650-955-9625	135	20
1650-956-9889	120	
1650-956-9889	KITS	
1650-956-9954	121	
1650-956-9954	KITS	
1650-956-9955	132	
1650-956-9955	KITS	
1650-956-9956	132	
1650-956-9956	KITS	
1650-957-3967	228	101A
1650-963-0986	102	29
1650-963-2065	148	23
1650-963-2093	136	17
1650-963-2106	109	13
1650-963-2106	109	54
1650-963-2106	119	328
1650-963-2122	109	58
1650-963-2122	109	61
1650-963-2122	119	226
1650-966-6427	149	7
1650-966-6427	274	55
1650-966-9386	135	

STOCK NUMBER	FIGURE NUMBER	ITEM NUMBER	STOCK NUMBER	FIGURE NUMBER	ITEM NUMBER
1a50-4aa-45a3	1e4	12a	1aa0-758-2822	C175	
1a50-4aa-45a3	27a	54	1aa0-758-9287	2a2	19A
1a50-4aa-45a7	1e4	38	1aa0-758-97a2	2a2C	8
1a50-4a7-a293	139		1aa0-7a1-89d5	142	
1a50-4a4-315a	268A	5	1aa0-7a7-a134	2a1	30
1a50-477-7e82	1e4	b	1aa0-780-9429	2a2	
1a50-477-7e82	27a	5a	1aa0-780-9929	C175	
1a50-473-2752	1e5	28	1aa0-7a4-2ae9	256	2
1a50-482-7302	129	15	1aa0-829-80e8	251	49
1a50-482-7305	129	a2	1aa0-855-9030	2a1	2b
1a50-482-7305	13C		1aa0-8a8-57a2	253	40
			1aa0-88a-1428	2a1	33
1a50-487-7932	135		1aa0-88a-1429	2a1	9
1a50-491-2404	151		1aa0-88a-1429	2a2A	1
1a50-491-2404	C175		1aa0-88a-3349	C175	
1a50-491-a984	119	82	1aa0-88a-3398	2a2B	
1a50-491-a984	12a		1aa0-887-a1a2	255	6
1a51-491-7154	273	13	1aa0-887-a1a4	251	33
1a50-491-7254	27a		1aa0-887-a171	255	9
1a50-491-825a	54	9	1aa0-887-a172	256	11
1a50-493-8258	54	1	1aa0-887-a173	253	2
1a50-493-8479	222	157	1aa0-887-a180	253	1C
1a50-493-8471	2a4	4a	1aa0-887-a182	253	42
1a50-493-850a	2a4	a1	1aa0-887-a183	253	15
1a50-494-75a3	82		1aa0-887-a184	253	18
1a50-494-7563	C175		1aa0-887-a185	253	37
1a50-494-75a4	82		1aa0-887-a18a	253	23
1a50-494-75a4	C175		1aa0-887-a187	253	28
			1aa0-887-a192	253	48
1a50-49a-2845	114		1aa0-887-a193	253	47
1a50-49a-3804	21	58	1aa0-887-a197	253	21
1a51-497-a8a5	54	11	1aa0-887-a198	253	31
1a50-498-1543	222	40	1aa0-887-a199	253	2b
1a50-498-1584	2a4	4a	1aa0-887-a217	251	48
1a50-498-1585	222	5C	1aa0-887-a230	251	5
1a50-498-158a	2a4	a1	1aa0-887-a231	251	48A
1a50-498-18aa	222	5C	1aa0-887-a234	251	30
1a51-498-1a7	222	5C	1aa0-913-4263	253	10
1a50-498-18ad	2a4	4a	1aa0-934-7a80	188	34
1aa0-010-78a0	251	29	1aa0-934-7509	188	35
1aa0-010-78a1	251	27			
1aa0-012-20a7	2a1	12	1aa0-9a4-a878	255	15
1aa0-018-0187	252	1	1aa0-950-a832	251	22
1aa0-03a-8050	172	72	1aa0-956-0322	251	a1
1aa0-03a-8050	171	aa	1aa0-95a-0950	192	98
1aa0-075-0284	254	55	1aa0-9a7-000a	135	12
1aa0-099-a34d	2a1	7	1aa0-981-3047	251	41
1aa0-049-712a	2a1	3a	1aa0-981-3047	2a1	
1aa0-037-aa48	188		1a70-394-2954	271	15
1aa0-332-8385	215	2a	1a70-410-5915	11A	43B
1aa0-337-a5aa	2a1	11	1a70-410-5915	11A	56B
1aa0-347-a2d8	7a	7a	1a70-410-5916	11A	43A
1aa0-34a-0254	2a2		1a70-410-5916	11A	56A
1aa0-4a3-14a4	2a1	24	1a70-410-5916	11A	73B
1aa0-4d6-a124	2a1	20	1a70-410-5917	11	139A
1aa0-4d5-4124	2a1	27	1a70-410-5918	11A	27
1aa0-534-7000	2a0	a	1a70-410-5919	11B	58
1aa0-547-a213	2a1	12	1a70-410-5919	11	45
1aa0-5a7-7284	251	31	1a70-410-5919	11	139B
1aa0-5a7-7284	250		1a70-410-5919	11A	2b
1aa0-587-a3da	251	1a	1a70-410-5919	11B	57
1aa0-a2a-3287	254	34	1a70-410-5920	11	44
1aa0-a2a-3287	2a0		1a70-410-5921	11A	27
1aa0-a7a-437a	254	14	1a70-410-5921	11B	58
1aa0-a75-334a	140	103	1a70-410-5922	11A	43C
2aa0-a75-334a	140	13a	1a70-410-5922	11A	56C
1aa0-a40-4103	2a1	5	1a70-410-5922	11A	73A
1aa0-71a-3441	2a0		1a70-410-5922	11B	52A
1aa0-71a-3441	C170		1a70-51a-8437	F3	
1aa0-757-713a	251	15	1a70-545-90a2	F3	6
1aa0-758-2822	2a0		1a70-a42-7823	F23	

STOCK NUMBER	FIGURE NUMBER	ITEM NUMBER
1670-692-7823	BULK	
1670-725-1437	F4	3
1670-885-8664	10	
1670-885-8664	10	31A
1670-909-8741	271	9A
1680-004-2420	223	
1680-010-7494	182	
1680-010-7494	203	
1680-017-8269	230	
1680-019-0273	272	38
1680-019-0274	272	39
1680-019-3903	36A	8
1680-021-3624	147	1
1680-021-3624	228	102
1680-021-3627	147	1
1680-021-3627	228	103
1680-021-6750	36	
1680-022-9871	270	1
1680-034-3675	272	25
1680-034-3690	203	20
1680-042-5819	226	33
1680-044-2860	100	1
1680-053-1689	248	93
1680-053-1695	248	27
1680-053-1698	248	33
1680-053-1708	248	1
1680-053-2576	228	59
1680-053-2580	222	8
1680-054-3610	248	30
1680-054-3689	37	37
1680-054-8758	265	68
1680-054-8758	268	39
1680-054-8762	265	284
1680-054-8762	268	244
1680-054-8768	268	217
1680-054-8781	265	265
1680-054-8781	268	225
1680-054-8784	265	148
1680-054-8784	268	102
1680-055-1603	203	1A
1680-055-2974	203	18
1680-055-2975	203	36
1680-055-6023	67A	46A
1680-055-6025	192	100
1680-056-2307	203	3
1680-056-2340	205	37
1680-063-0803	222	12
1680-064-9201	223	65
1680-065-0667	223	64
1680-065-0668	228	111
1680-066-4181	225	4
1680-067-8135	248	28
1680-069-6267	36	
1680-069-6273	222	44
1680-069-6273	248	
1680-069-9518	235	
1680-069-9519	263	26
1680-069-9521	34	54
1680-070-6774	102	37
1680-070-6776	263	
1680-072-1051	258	12
1680-072-1054	258	12
1680-072-4424	246	13
1680-072-4424	247	
1680-073-8326	37A	97
1680-073-8419	265	
1680-073-8419	268	132A
1680-074-1200	102	
1680-074-1200	103	
1680-074-1227	102	40
1680-074-1958	102	41
1680-074-1960	102	30
1680-074-1962	102	37
1680-075-0288	225	4
1680-076-2032	246	1
1680-076-2033	229	8
1680-076-6034	37	21
1680-076-6035	37	21
1680-076-6037	37	13
1680-078-5025	244	34
1680-078-5025	248	
1680-083-3843	265	123
1680-083-3843	268	129
1680-084-1184	265	144
1680-084-1184	265	196
1680-084-1184	268	168
1680-084-1184	268	99
1680-089-2363	265	143
1680-089-2363	268	100
1680-089-2377	265	145
1680-089-2377	268	101
1680-089-2378	265	206
1680-089-2378	268	161
1680-089-3593	265	104
1680-089-3593	268	125
1680-089-9581	282	8
1680-089-9582	282	5
1680-089-9583	282	9
1680-099-6936	262	56
1680-103-0029	222	210
1680-103-0029	244	99A
1680-115-4879	248	
1680-115-9141	201	52
1680-116-1689	368	15
1680-117-3132	223	
1680-117-9446	191	26
1680-117-9446	195	10
1680-117-9447	195	14
1680-117-9484	244	99A
1680-118-5719	41	
1680-118-8798	41	
1680-120-0560	259	3
1680-130-5895	191	25
1680-130-5895	194	228
1680-130-5895	195	19
1680-132-1025	244	99A
1680-132-1026	222	80
1680-133-6875	368	7
1680-133-6961	37A	5
1680-133-7217	29	
1680-133-7218	29	
1680-133-7219	29	1
1680-134-3035	37	12
1680-135-0283	66	39
1680-135-0284	66	35
1680-135-0284	901	42
1680-150-9637	187	
1680-163-5091	182A	11A
1680-168-5426	191	21
1680-168-5426	194	193
1680-168-5426	195	18
1680-168-5427	191	20
1680-168-5427	194	157
1680-168-5427	195	17
1680-168-5428	191	18
1680-168-5428	194	75
1680-168-5428	195	15
1680-168-5429	191	19
1680-168-5429	194	114
1680-168-5429	195	16

STOCK NUMBER	FIGURE NUMBER	ITEM NUMBER	STOCK NUMBER	FIGURE NUMBER	ITEM NUMBER
1680-168-5438	184	46	1680-247-3427	37A	61
1680-168-5607	182	60	1680-247-3428	37A	43
1680-168-5607	182A		1680-247-3429	37A	4
1680-168-5737	258	12	1680-251-2527	37A	57
1680-168-5737	258A		1680-251-2527	37A	66A
1680-168-5963	196		1680-251-2527	37A	77
1680-176-0954	269	11	1680-299-0935	252	16
1680-176-1110	268	73	1680-309-4591	232	45
1680-176-1270	40	13	1680-326-4470	29	
1680-176-1270	40	20	1680-327-2370	182	68
1680-176-1270	40	24	1680-327-2370	187	46
1680-176-1270	40	7	1680-328-1690	29	
1680-176-1963	270	19	1680-345-9438	216	46
1680-179-1100	228	128	1680-346-4003	230	36
1680-179-1101	228	128	1680-346-4003	231	84
1680-179-1374	195	14	1680-346-4004	230	35
1680-181-3718	36A	18	1680-346-4004	231	87
1680-181-3890	36B	28	1680-346-4005	230	30
1680-181-3891	36B	29	1680-346-4005	231	86
1680-181-4303	191	17	1680-347-7946	230	18
1680-181-4303	194		1680-403-6999	222	155
1680-181-4303	195	14	1680-403-6999	222	42
1680-181-4304	191	13	1680-403-6999	244	32
1680-181-4304	195	9	1680-403-7000	244	31
1680-181-4966	269	8	1680-404-0856	228	148
1680-181-5191	196		1680-404-0857	228	136
1680-183-5950	192	75	1680-407-7332	182A	26
1680-197-1784	196	16	1680-407-7350	182A	24
1680-222-9248	37B	37	1680-407-7351	182A	25
1680-225-0673	36A	4	1680-407-7352	182A	27
1680-225-0674	36A	5	1680-407-7371	182A	4
1680-226-1748	232	38	1680-407-7376	182A	9
1680-226-1749	228	17	1680-410-4629	37A	37
1680-226-1749	232		1680-410-4631	232	24
1680-226-1750	228	16	1680-410-4632	232	24
1680-226-1750	232		1680-420-0886	268	216
1680-226-1751	228	40	1680-420-0887	268	172A
1680-226-1751	231		1680-420-0888	268	90
1680-226-1752	228	39	1680-420-0889	268	258
1680-226-1752	231		1680-420-0890	268	231
1680-226-1753	228	110	1680-420-0891	268	150
1680-226-1753	229	25	1680-420-5210	268	131
1680-226-1753	230		1680-420-5211	268	124
1680-226-1754	228		1680-420-9190	182	62
1680-226-6274	269	7	1680-420-9190	187	26
1680-226-6274	270		1680-420-9476	36A	42
1680-228-1752	205	23	1680-421-7414	36B	22
1680-229-2972	182	61	1680-421-7415	36B	23
1680-229-2972	187	7	1680-421-7416	36A	21
1680-229-6710	245	9	1680-421-7417	36A	22
1680-230-3889	37B	41	1680-421-7418	36A	
1680-230-3898	37B	8	1680-421-7419	36B	12
1680-230-3899	37B	10	1680-421-7420	36A	17
1680-230-3900	37B	9	1680-421-7420	36B	20
1680-230-3903	37B	11	1680-421-7421	36A	1
1680-231-8122	20	87A	1680-421-7421	36B	1
1680-241-5289	190A	12	1680-421-7422	36A	
1680-241-5290	190A	26	1680-421-7423	36B	3
1680-241-5292	190A	48	1680-421-9733	36A	13
1680-241-9657	36A	20	1680-421-9734	36B	16
1680-241-9661	36A	25	1680-434-7417	100	2
1680-245-1833	189A		1680-443-1137	228	16
1680-245-1833	190A		1680-443-1138	228	17
1680-247-3420	37A	73A	1680-443-1139	37A	19
1680-247-3421	37A	76	1680-443-1140	37A	8A
1680-247-3422	37A	88	1680-445-6252	28	35
1680-247-3423	37A	89			
1680-247-3424	37A	50	1680-447-9504	37	38
1680-247-3425	37A	51	1680-456-1946	37A	24
1680-247-3426	37A	55	1680-463-4789	103	30
1680-247-3426	37A	81	1680-471-8738	36B	30

STOCK NUMBER	FIGURE NUMBER	ITEM NUMBER
1680-471-8739	36A	37
1680-471-8740	36A	36
1680-477-6308	228	24
1680-477-6308	234	
1680-477-6309	234	21
1680-481-3161	258A	5
1680-482-9079	36B	32
1680-485-2934	42	9
1680-485-3047	37	32
1680-485-3047	37A	99
1680-485-9744	204	
1680-491-9767	182A	48
1680-493-9478	258A	3
1680-497-1970	36B	33
1680-516-6543	37	36
1680-516-6543	37A	103A
1680-516-8427	263	27
1680-535-5202	230	39
1680-535-5203	230	
1680-555-2938	37	32
1680-555-2938	37A	99
1680-560-0504	157	13
1680-560-0504	158	14
1680-571-3575	265	124
1680-571-3575	268	130
1680-571-3579	265	142
1680-571-3579	268	97
1680-571-3604	265	194
1680-571-3604	268	165
1680-571-3608	265	164
1680-571-3608	265	170
1680-571-3608	268	139
1680-571-3628	265	305
1680-571-3628	268	266
1680-571-3683	265	148
1680-571-3683	268	103
1680-571-3686	265	165
1680-571-3686	265	171
1680-571-3686	268	140
1680-572-6641	247	21
1680-572-6645	247	14
1680-572-9256	265	188
1680-572-9256	268	228
1680-572-9258	265	208
1680-572-9258	268	222
1680-572-9323	265	198
1680-572-9323	268	169
1680-572-9394	265	307
1680-572-9394	268	268
1680-573-3985	265	82
1680-573-3985	268	24
1680-575-1428	230	29
1680-575-1428	231	83
1680-602-4199	247	15
1680-605-3412	42	11
1680-605-8550	36A	31
1680-628-2649	225	23
1680-632-9608	37	34
1680-632-9608	37A	32
1680-647-1664	265	207
1680-647-1664	268	164
1680-647-1705	265	264
1680-647-1705	268	189
1680-654-7532	231	88
1680-656-6868	231	
1680-659-9616	244	34
1680-659-9616	248	
1680-659-9617	222	44
1680-659-9617	248	
1680-670-8412	28	39
1680-672-1094	36	
1680-673-8871	34	9
1680-686-1580	230	50
1680-699-0147	42	2
1680-703-3359	42	1
1680-703-3359	42	10
1680-716-0148	225	16
1680-725-5719	34	52
1680-733-7773	62	
1680-736-8879	29	
1680-738-4594	230	52
1680-739-2629	66	39
1680-739-4856	223	65
1680-739-4873	223	64
1680-753-0533	37	35
1680-753-0533	37A	33
1680-753-0551	37	9
1680-753-0552	37	16
1680-753-0554	37	15
1680-753-0555	37	20
1680-753-4201	37	
1680-756-2805	265	13A
1680-756-3763	263	28
1680-756-3851	102	
1680-756-3851	103	
1680-757-2878	36	
1680-757-2879	36	
1680-757-2880	36	
1680-757-2881	36	15
1680-757-2882	36	14
1680-757-2883	36	
1680-757-4825	226	33
1680-757-4826	225	7
1680-757-4827	228	31
1680-757-4827	234	
1680-758-0185	228	
1680-758-0186	228	
1680-758-0186	229	41
1680-758-1937	36	13
1680-758-9761	229	13
1680-759-1789	37	10
1680-759-5488	265	139
1680-759-5488	268	95
1680-759-5491	226	
1680-759-7496	265	86
1680-759-7496	268	17
1680-759-7503	38	3
1680-761-8986	102	7J
1680-761-9537	205	14
1680-762-0034	102	37
1680-764-8740	37	
1680-771-5092	265	261

STOCK NUMBER	FIGURE NUMBER	ITEM NUMBER
1680-771-5092	268	187
1680-771-5094	265	244
1680-771-5094	265	246
1680-771-5094	265	251
1680-771-5094	268	175
1680-771-5094	268	192
1680-771-5094	268	213
1680-773-3018	37	
1680-773-3018	37A	
1680-775-1855	234	54
1680-780-2121	37	33
1680-780-2121	37A	31A
1680-780-5281	102	37
1680-780-5283	229	8
1680-780-5283	247	
1680-780-5284	229	8
1680-780-5284	245	11
1680-780-5284	246	10
1680-780-5284	247	
1680-780-5953	258A	8
1680-780-6104	37	30
1680-780-6104	37	7
1680-781-6651	182	60
1680-781-6651	182A	
1680-785-8579	222	80
1680-785-8579	248	
1680-785-8585	244	99A
1680-785-8585	248	
1680-788-5735	36	22
1680-789-4045	269	7
1680-789-4045	270	
1680-790-0183	228	16
1680-794-2548	37	28
1680-794-2607	228	
1680-794-2607	229	26
1680-794-2622	228	111
1680-794-2622	230	
1680-794-2625	228	138
1680-794-2626	228	138
1680-794-2627	228	138
1680-794-2628	228	128
1680-794-2654	37	9
1680-795-0805	230	58
1680-795-0805	231	73
1680-795-0950	100	1
1680-796-5060	97	7C
1680-796-5089	94	20
1680-825-1554	270	7
1680-825-1566	269	5
1680-826-5534	128	
1680-826-5542	269	7
1680-826-5542	270	
1680-827-0620	222	15
1680-827-0626	222	16
1680-829-8016	230	3
1680-829-8084	37A	
1680-829-8186	182	60
1680-829-8186	182	7
1680-829-8186	202	
1680-829-8194	244	34
1680-829-8240	222	44
1680-830-2810	183	54
1680-830-4329	223	
1680-831-0688	100	1
1680-834-1445	269	5A
1680-847-7466	229	36
1680-847-7466	234	
1680-849-8923	270	48
1680-853-5464	37	
1680-853-5464	37A	
1680-853-7931	270	61F
1680-853-8487	201	24
1680-856-1657	207	12
1680-856-1717	264	15
1680-859-2710	34	
1680-862-4819	228	110
1680-862-4819	229	25
1680-862-4819	230	
1680-862-9133	199	6
1680-862-9137	201	57
1680-862-9138	201	68
1680-862-9180	223	118
1680-862-9203	37	
1680-862-9203	KITS	
1680-862-9206	270	40
1680-862-9207	270	43
1680-862-9208	270	43
1680-862-9209	270	25
1680-862-9213	270	55
1680-862-9214	270	53A
1680-862-9215	270	51
1680-862-9216	270	44
1680-862-9219	269	9
1680-862-9221	269	12
1680-862-9223	269	19
1680-862-9224	269	7
1680-862-9224	270	
1680-862-9226	36	5
1680-862-9227	36	3
1680-862-9234	264	
1680-862-9236	263	18D
1680-862-9238	263	24C
1680-862-9239	264	9B
1680-862-9240	264	6
1680-862-9243	264	3
1680-862-9244	264	4
1680-862-9246	263	6
1680-862-9247	269	22
1680-862-9248	269	1
1680-862-9251	270	39B
1680-862-9252	270	36B
1680-862-9257	222	11B
1680-862-9261	222	10
1680-862-9272	223	27
1680-862-9273	223	13
1680-862-9274	223	36
1680-862-9280	223	118
1680-862-9281	270	27
1680-863-1138	270	57
1680-863-3852	228	111
1680-863-3852	230	
1680-863-3853	228	39
1680-863-3853	231	
1680-863-3854	228	40
1680-863-3854	231	
1680-863-3855	191	10
1680-863-3855	191	42
1680-863-3855	192	
1680-863-3855	195	23
1680-863-3855	195	47
1680-863-3856	207	10
1680-863-3857	207	9

STOCK NUMBER	FIGURE NUMBER	ITEM NUMBER
1680-863-3862	258	5
1680-863-3863	147	
1680-863-3863	228	102
1680-863-3864	147	1
1680-863-3864	228	103
1680-863-3868	228	
1680-864-3313	222	
1680-865-8069	167	4
1680-866-6073	97	11C
1680-866-6079	97	17A
1680-866-6080	98	7
1680-866-6081	99	5
1680-867-1164	38	1
1680-867-1165	38	2
1680-867-1166	38	9
1680-867-1167	38	5
1680-868-1088	226	41
1680-868-5849	228	
1680-868-5849	229	42
1680-868-7007	269	12
1680-868-8377	270	56
1680-868-8446	269	14
1680-868-8447	269	14A
1680-869-8139	88	
1680-871-8695	29	1
1680-871-8701	29	3
1680-872-3293	98	1
1680-872-6114	222	29
1680-872-7844	40	35
1680-874-7052	34	
1680-874-8744	112	19
1680-876-8765	204	10
1680-876-8766	235	5A
1680-876-8769	102	41
1680-876-8769	103	34
1680-876-8770	102	40
1680-876-8770	103	33
1680-876-8774	102	
1680-876-8775	102	7B
1680-876-8775	103	9
1680-876-8776	102	13
1680-876-8776	103	15
1680-878-1266	245	11
1680-878-1266	246	10
1680-878-1266	247	
1680-879-1674	222	210
1680-879-1674	244	99A
1680-879-1675	244	99A
1680-879-1679	244	89
1680-879-1679	244	99A
1680-880-0643	265	73
1680-880-0643	268	43
1680-881-8075	198	2
1680-885-0017	258	10
1680-885-8681	204	
1680-885-8682	204	
1680-885-8695	29	2
1680-885-8706	269	20
1680-886-1360	228	70
1680-886-1361	228	10B
1680-886-1362	228	52B
1680-886-1363	228	10A
1680-886-1395	100	7
1680-889-1301	223	166
1680-895-5902	182	
1680-895-9317	66	35
1680-895-9319	257	3
1680-895-9319	262	
1680-895-9426	QC1	155
1680-895-9426	259	2
1680-895-9427	QC1	156
1680-895-9427	259	1
1680-898-0318	34	7
1680-900-3266	247	9
1680-900-3278	248	107
1680-900-3283	248	66
1680-901-2429	36	1
1680-902-5206	248	99
1680-902-5207	248	98
1680-902-5209	248	57
1680-902-5210	248	74
1680-902-5230	248	75
1680-902-5233	248	73
1680-906-3908	34	46
1680-906-3909	34	45
1680-906-8023	228	128
1680-906-8030	34	43
1680-907-8398	228	39
1680-907-8398	230	
1680-907-8399	228	40
1680-907-8399	230	
1680-909-2572	100	2
1680-909-4194	37	2
1680-909-4197	37	
1680-909-4197	37A	
1680-910-8929	228	176A
1680-910-8929	228	187A
1680-911-3913	32	
1680-911-3915	34	42
1680-911-6695	247	18
1680-912-3085	264	1A
1680-912-3085	268	
1680-915-5901	37A	3
1680-915-5906	281	16
1680-915-5907	281	17
1680-915-5918	37	3
1680-915-5918	37A	
1680-915-5938	281	13
1680-915-5939	281	13
1680-915-5972	37	24
1680-915-5973	37	
1680-916-5588	37	10
1680-916-8332	281	4
1680-916-8332	282	13
1680-916-8333	281	4
1680-916-8333	282	11
1680-916-8334	281	
1680-916-8334	282	14
1680-916-8335	281	
1680-916-8335	282	15
1680-918-5483	40	35
1680-918-8192	268	194
1680-918-8193	268	185
1680-919-0169	268	195A
1680-919-0170	268	204
1680-919-0172	268	197
1680-919-0173	268	201
1680-919-0198	268	
1680-919-0199	268	186
1680-919-0199	268	193
1680-919-0200	268	195
1680-919-0202	268	56
1680-919-0203	268	183
1680-919-2020	268	184
1680-922-2692	182	60
1680-922-2692	182A	
1680-922-2694	282	23
1680-922-2695	282	4
1680-922-2696	282	18

STOCK NUMBER	FIGURE NUMBER	ITEM NUMBER
1680-922-2701	228	
1680-922-8264	36A	3
1680-923-0565	37A	2
1680-923-2963	182	41
1680-923-2963	182	6
1680-923-4318	36	6
1680-923-4318	36A	
1680-923-8264	281	4
1680-923-9055	281	3
1680-923-9062	281	2
1680-923-9063	281	1
1680-925-6573	232	28
1680-925-6679	232	7
1680-925-6680	232	42
1680-925-6907	232	24
1680-927-1262	32	
1680-927-4436	34	
1680-928-3886	264	2
1680-928-6295	167	4
1680-928-9011	182	24
1680-937-3857	29	5
1680-937-9692	228	16
1680-937-9692	232	
1680-939-5434	258	12
1680-939-7720	102	58
1680-939-8655	223	246
1680-940-8442	37	
1680-940-8445	37	
1680-941-5180	226	33
1680-941-5238	37A	
1680-941-5239	37A	
1680-941-5612	223	
1680-941-5613	223	
1680-941-8732	225	2
1680-941-8777	34	
1680-943-2344	36	
1680-943-7510	270	22
1680-943-7510	272	
1680-945-3903	37	6
1680-945-3904	37	6
1680-947-3498	256	18
1680-948-6552	226	33
1680-948-6568	258	12
1680-955-2048	228	111
1680-955-2048	230	
1680-955-2049	228	40
1680-955-2049	231	
1680-955-2050	228	39
1680-955-2050	231	
1680-955-2051	228	110
1680-955-2051	229	25
1680-955-2051	230	
1680-955-2056	244	
1680-955-2056	248	
1680-955-2057	244	
1680-955-2057	248	
1680-955-2057	KITS	
1680-955-9583	223	57
1680-955-9610	37	4
1680-955-9610	281	19
1680-955-9611	37	5
1680-955-9611	281	18
1680-956-9878	272	
1680-956-9878	KITS	
1680-956-9879	272	
1680-956-9879	KITS	
1680-956-9891	258	12
1680-956-9892	269	23
1680-956-9898	223	
1680-956-9904	231	52
1680-956-9905	231	
1680-956-9906	231	43
1680-956-9908	230	3
1680-956-9908	231	1
1680-956-9910	231	58
1680-956-9912	230	9
1680-956-9912	231	7
1630-956-9942	230	11
1680-956-9942	231	14
1680-956-9945	230	64
1680-956-9945	231	76
1680-956-9951	207	
1680-956-9951	208	
1680-957-6279	234	43
1680-957-7324	230	82
1680-957-7332	230	81
1680-958-5459	36	4
1680-958-5459	36B	
1680-960-3913	256	4
1680-960-3914	256	5
1680-960-3929	37	39
1680-960-3929	37B	
1680-960-4046	230	
1680-960-4048	230	
1680-960-4049	230	73
1680-960-4050	230	73
1680-960-4051	230	16
1680-960-4052	230	51
1680-963-0985	103	52
1680-963-1051	204	10
1680-963-1051	205	
1680-963-9072	230	
1680-963-9269	226	51
1680-964-0399	282	20
1680-964-0445	282	19
1680-964-0637	282	16
1680-964-0717	282	17
1680-964-0734	282	1
1680-964-0815	222	44
1680-966-7598	245	19
1680-966-7599	245	
1680-967-1839	228	24
1680-967-1839	234	
1680-967-1850	270	10
1680-968-4675	229	8
1680-968-4676	229	9
1680-968-4676	245	9
1680-968-4676	246	9
1680-969-9157	258A	6
1680-973-2160	36	29
1680-973-2177	36	28
1680-974-6493	32	
1680-975-2987	37	
1680-975-2987	37A	
1680-976-9314	182	7
1680-976-9314	202	
1680-977-9020	228	17
1680-977-9020	232	
1680-977-9021	228	16
1680-977-9021	232	
1680-977-9023	228	18
1680-979-5622	269	7
1680-979-5622	270	
1680-979-5624	270	49
1680-979-8834	36A	26
1680-979-8841	36A	27
1680-981-3054	20	79
1680-986-6194	226	32

STOCK NUMBER	FIGURE NUMBER	ITEM NUMBER	STOCK NUMBER	FIGURE NUMBER	ITEM NUMBER
1680-986-7153	225	4	1730-760-3369	A47	7
1680-987-7492	223	87	1730-760-3370	A33	
1680-987-7524	240		1730-760-3371	A33	
1680-989-3930	204	10A	1730-760-3372	A33	
1680-994-4310	231		1730-760-3373	A33	
1680-994-4310	KITS		1730-760-3374	A33	
1680-994-5885	231		1730-760-3375	A33	
1680-994-5885	KITS		1730-760-3376	A33	
1680-994-5892	230		1730-760-3377	A33	
1680-994-5892	KITS		1730-780-5286	A44	4
1680-994-5919	230		1730-785-2055	F4	1
1680-994-5919	KITS		1730-827-0619	F22	7
			1730-839-7063	F4	2
1680-995-2713	263	25A	1730-848-4955	F3	5
1680-996-0887	264	1A	1730-848-4960	F3	5
1680-996-0887	265		1730-863-5785	F10	1
1680-996-3911	223		1730-863-5786	F23	2
1680-996-3913	223	117	1730-866-6948	F12	1
1680-996-3915	223	95	1730-867-1250	F22	7
1680-996-3917	223	117	1730-867-1252	A34	
1680-996-3920	256	17	1730-867-1253	A4	10
1680-996-3921	256	3	1730-878-0352	F3	2
1680-996-3922	256	2	1730-879-3054	F21	2
1680-996-3924	222	26	1730-879-3060	A33	6
1680-996-3925	222	25	1730-879-3062	F11	3
1680-996-3927	222	28	1730-879-3069	F23	4
1680-997-0035	248		1730-886-1351	11	1
1680-998-7613	246	13	1730-886-1377	44	25
1680-998-7613	247		1730-886-1377	51	12
1680-999-3701	275		1730-906-1350	F21	2
1730-010-7462	A37	6	1730-907-7676	F3	3
1730-010-7854	F11		1730-919-2061	A34	2
1730-010-7855	F11		1730-921-8568	F17	26
1730-010-7862	F11	6	1730-921-8569	F16	32
1730-022-7068	A47		1730-927-3633	F25	2
1730-034-3874	F21	1	1730-943-0781	A47	
1730-070-6758	A6	6	1730-943-1286	F17	31
1730-071-1690	F12	4	1730-948-3222	F11	6
1730-073-3294	F10	2A	1730-960-4004	F10	2
1730-073-3326	A28	2	1730-976-9328	F5	4
1730-075-1055	F5	7	1730-977-7479	F5	3
1730-089-7806	F2	1	1730-978-2158	F5	5
1730-112-0586	F20	25	1730-986-3702	F23	
1730-168-5439	F22	6	1730-990-9838	F5	8
1730-179-1326	F11	3	1740-462-8761	F23	5
1730-181-4136	F12	1	1740-516-7929	F21	6
1730-181-4138	F12		1850-970-7476	138	43
1730-191-9373	F4	4	1850-971-0660	138	56A
1730-203-4697	F24	1	2520-741-4449	145	13
1730-220-5288	F21		2620-134-5038	43	12
1730-226-3069	F12	2	2620-204-4820	43	12
1730-299-0991	A47		2620-269-7270	43	
1730-310-5914	F2	6	2620-269-7270	45	
1730-311-7555	F2	8	2620-528-8875	43	12
1730-312-7915	F2	3	2620-528-8875	45	7
1730-317-2985	F2	2	2620-528-9221	43	12
1730-369-9490	11B	77	2620-938-5964	43	12
1730-435-7802	F4	5	2620-938-5964	45	7
1730-439-7952	F3	2	2620-999-3725	44	
1730-462-8872	F11		2620-999-3727	44	11
1730-492-3017	F2	7	2640-222-4525	50	15
1730-540-2343	F24	2	2640-554-0579	50	
1730-578-9677	F2	4	2640-810-5861	50	16
1730-660-4071	F14	15	2835-015-8603	BULK	
1730-755-6724	F23	3	2835-809-8316	273	1
1730-756-9186	F11	4	2835-876-8834	273	48
1730-758-4985	F16	13	2835-876-8835	273	6
1730-758-4986	F16	46	2835-893-1213	273	1
1730-758-4987	F5	2	2835-906-6766	273	1
1730-758-5020	F21	5	2840-063-0801	62	
1730-760-3367	F14		2840-166-5739	82	24

STOCK NUMBER	FIGURE NUMBER	ITEM NUMBER	STOCK NUMBER	FIGURE NUMBER	ITEM NUMBER
2840-211-5271	82	28	2915-863-1119	220	27
2840-428-6382	62		2915-863-1119	221	60
2840-781-6677	BULK		2915-868-5354	215	
2840-791-6071	62		2915-868-5355	215	
2840-895-9452	62	72	2915-873-8048	212	
2840-895-9452	QC1	140	2915-883-9922	67A	23
2840-895-9452	217		2915-893-3544	213	54
2840-895-9452	217A	19	2915-893-3544	214	
2840-895-9452	217B	20	2915-893-3544	220	53
2840-922-5838	62	42	2915-910-8392	215	11
2840-923-0583	62	55	2915-922-2754	213	26
2840-923-0583	QC1	14	2915-922-2754	213	6
2840-937-0480	62		2915-922-2754	216	
2840-937-0480	QC1	1	2915-922-2754	220	4
2840-944-0726	62	42	2915-922-2754	221	33
2840-944-0726	QC1	13	2915-922-2754	221	41
2840-950-6875	62		2915-922-2754	221	56
2840-950-6875	QC1	1	2915-922-2754	221	69
2840-987-9717	62		2915-944-8249	216	8B
2915-015-6022	215		2915-944-8251	216	62
2915-073-4359	214		2915-946-7891	213	54
2915-073-4359	KITS		2915-946-7891	214	
2915-073-5689	214		2915-946-7891	220	53
2915-073-5689	KITS		2915-955-0893	216	
2915-097-0325	213	38	2915-955-0893	KITS	
2915-097-0325	220	35	2915-955-0894	216	
2915-104-6802	219		2915-955-0894	KITS	
2915-104-6802	219A	170	2915-955-0895	216	
2915-104-6802	219A	65	2915-955-0895	KITS	
2915-104-6804	218		2915-992-9478	211	24A
2915-120-0924	216	12	2915-998-8337	67A	21A
2915-141-9038	218	22B	2925-043-1901	QC1	146
2915-205-0894	216	45	2925-043-1901	BULK	
2915-237-5659	220	7	2925-043-1979	QC1	
2915-237-5659	221	30	2925-043-1979	BULK	
2915-237-5659	221	70	2925-089-6296	196	
2915-326-6789	215	15	2925-091-9215	62	
2915-326-6790	215	10	2925-091-9216	62	
2915-326-6793	215	37A	2925-091-9217	62	
2915-330-7394	215	25	2925-092-4648	62	
2915-332-5384	215	33	2925-113-5767	62	
2915-332-5386	215	28	2925-134-5128	62	
2915-345-8160	215	37	2925-159-8852	62	
2915-345-9439	216	26	2925-176-8730	62	
2915-346-4334	216	49	2925-565-8528	62	
2915-347-5046	215	32	2925-565-8529	62	
2915-373-7507	216	35	2925-740-3321	196	
2915-373-7512	216	9	2925-758-5728	260	
2915-373-7537	216	13	2925-758-5728	KITS	
2915-373-7539	216	10	2925-851-1493	62	67
2915-373-7544	216	4	2925-851-1493	QC1	148
2915-510-3029	216	54	2925-877-4298	196	3A
2915-511-4989	216	57	2925-877-4302	196	3
2915-524-4921	215	31	2925-877-4307	196	3B
2915-536-3244	216	63	2925-880-4798	QC1	
2915-561-7207	216	52	2925-880-4798	BULK	
2915-594-0397	216	18A	2925-955-5599	62	65
2915-627-7741	215	2A	2925-955-5599	QC1	144
2915-739-2548	213	26	2925-955-5600	62	64
2915-739-2548	216		2925-955-5600	QC1	143
2915-785-2062	212	1	2925-960-3923	62	66
2915-794-4825	216	23	2925-960-3923	QC1	145
2915-820-3430	215	12	2925-983-7521	209	32
2915-852-6813	211	21B	2935-758-2841	97	23
2915-852-6813	212				
2915-852-6813	218	33	2940-140-3887	83	21D
2915-852-6813	219	25	2945-089-4330	62	7A
2915-852-6813	219	71	2945-089-4331	62	7A
2915-852-6813	219A	173	2945-753-1444	96	16
2915-852-6813	219A	68	2945-966-4428	96	4
2915-863-1119	213	29	2990-021-9007	274	23

STOCK NUMBER	FIGURE NUMBER	ITEM NUMBER
2990-021-9017	274	31
2990-021-9018	274	17A
2990-021-9020	274	49
2990-021-9021	149	103
2990-021-9021	274	65
2990-021-9022	149	
2990-021-9022	274	59
2990-021-9023	274	23
2990-757-4858	274	28
2990-793-0427	274	8
2995-011-0842	65	35
2995-012-3376	204	34
2995-012-3383	62	71
2995-012-3383	65	
2995-012-3383	QC1	77
2995-012-7325	65	34
2995-016-6350	66	25
2995-028-2242	67	65
2995-069-3430	11B	15
2995-069-3432	11B	16
2995-072-5652	62	71
2995-072-5652	63	
2995-079-8963	66	42
2995-079-8963	QC1	45
2995-080-7959	62	33
2995-080-7959	64A	
2995-082-0537	66	39
2995-086-8189	62	71
2995-086-8189	63	
2995-106-4547	66	26
2995-116-7546	62	33
2995-118-2223	67	41
2995-120-0906	67	46
2995-121-6723	67	60
2995-121-6724	67	59
2995-123-0812	67	32
2995-133-3411	67	57
2995-134-4682	62	71
2995-134-4682	62	71
2995-134-4682	67	
2995-134-4682	QC1	77
2995-134-4682	QC1	77
2995-134-5090	66	35
2995-134-5091	66	35
2995-136-2412	65	89
2995-136-2413	65	79
2995-136-2415	63	25
2995-136-2416	65	65
2995-136-2418	65	47
2995-136-2419	65	90
2995-136-2420	65	93
2995-136-2421	65	77
2995-136-2422	65	3
2995-136-2423	65	12
2995-136-2424	65	49
2995-136-7519	63	82
2995-136-7520	63	41
2995-138-4091	63	105
2995-141-7018	183	59
2995-141-7022	183	59
2995-141-7024	183	18
2995-150-5914	182	12
2995-150-5914	183A	
2995-150-5915	204	34
2995-150-5915	204A	
2995-159-9002	66	35
2995-159-9002	68	
2995-168-2521	228	82
2995-176-8932	67	41A
2995-178-0939	67	52
2995-178-0962	67	33
2995-186-6303	183A	14
2995-186-6304	183A	42
2995-191-2632	68	18
2995-191-2634	68	33
2995-191-2642	68	10
2995-199-7410	65	23
2995-199-7411	65	59
2995-199-7412	65	40
2995-199-7415	65	9
2995-199-7417	65	72
2995-199-7418	65	57
2995-201-3842	67	18
2995-230-0531	67A	70
2995-233-9271	67A	18
2995-233-9272	67A	2
2995-233-9273	67A	34
2995-233-9274	67A	49
2995-233-9276	67A	78
2995-233-9277	183A	10
2995-233-9278	183A	
2995-233-9279	183A	24
2995-233-9280	183A	82
2995-233-9281	183A	29
2995-237-4672	66	25
2995-242-4512	67A	
2995-248-1545	65	92
2995-256-6328	183A	82
2995-349-9253	204A	14
2995-373-7541	216	2
2995-403-7052	66	42
2995-405-4687	183A	
2995-411-8473	67	40
2995-411-8474	67	10
2995-411-8475	67	3
2995-411-8476	67	38
2995-411-8479	67	44
2995-420-5226	66	39
2995-420-5226	QC1	43
2995-420-5226	67A	
2995-420-5227	66	35
2995-437-7626	67	7
2995-443-1767	67	18
2995-451-1154	204A	24
2995-454-8970	64A	19
2995-454-8971	64A	6
2995-454-8972	64A	4A
2995-455-6197	64A	13
2995-455-6202	64A	70
2995-455-6203	64A	36
2995-455-6205	64A	41
2995-455-6206	64A	46
2995-455-6207	64A	54
2995-455-6208	64A	37
2995-455-6209	64A	38
2995-455-6212	64A	53
2995-455-6215	64A	48
2995-456-6056	64A	61
2995-459-4039	66	35
2995-459-4039	68	
2995-471-8747	204A	147
2995-471-8748	204A	16
2995-471-8750	204A	2
2995-482-6274	183A	13
2995-483-1278	183A	42
2995-483-1279	68	2

STOCK NUMBER	FIGURE NUMBER	ITEM NUMBER	STOCK NUMBER	FIGURE NUMBER	ITEM NUMBER
2995-483-1280	68	50	3020-230-0437	68	
2995-483-1281	183A	36	3020-242-4464	68	22
2995-483-1286	68	87	3020-245-1769	37A	41A
2995-483-1287	183A	47	3020-287-4709	170	45
2995-483-8510	64A	66	3020-287-4709	171	45
2995-485-9787	64A	43	3020-287-7920	22	33
2995-493-9503	67	49	3020-287-7920	22	35
2995-735-6542	62	71	3020-288-4514	170	51
2995-751-9530	183	9	3020-288-4514	171	51
2995-850-4917	63	110	3020-313-9678	22	30
2995-866-9514	63	60	3020-329-0345	170	23
2995-866-9518	63	102	3020-329-0345	171	25
2995-866-9519	63	66	3020-345-9440	216	23
2995-866-9520	63	74	3020-347-9016	216	23
2995-866-9521	63	75	3020-348-6746	216	23
2995-866-9522	63	73	3020-348-6747	216	23
2995-866-9523	63	69	3020-373-7625	216	48
2995-867-1148	63	46	3020-373-7626	216	51
2995-867-1149	63	3	3020-450-3613	190A	31
2995-867-1150	63	84	3020-471-8749	68	42A
2995-867-1152	63	54	3020-495-6542	183A	55
2995-867-1163	63	19	3020-495-6543	68	55
2995-867-1178	63	123	3020-495-6544	68	53
2995-867-5453	63	119	3020-506-7842	30	11
2995-867-5456	63	128	3020-517-1327	F15	19
2995-867-5457	63	113	3020-517-1327	F15	30
2995-867-5458	63	107	3020-517-1327	F15	37
2995-867-5460	63	98	3020-517-1327	F15	43
2995-867-5461	63	96	3020-517-1327	F15	9
2995-867-5462	63	6	3020-517-1327	F20	12
2995-895-9449	66	32	3020-517-1327	263	16
2995-895-9449	QC1	40	3020-528-0513	22	33
2995-909-7455	95	167B	3020-566-2521	233	26
2995-911-7671	182	12	3020-610-9332	192	102
2995-911-7671	183		3020-670-8248	248	96
2995-936-5598	228	84	3020-687-8615	265	288
2995-941-7428	63	117	3020-687-8615	268	249
2995-948-3179	66	25	3020-689-3262	68	20
2995-948-3179	66	26	3020-704-1523	170	25
2995-948-3179	QC1	38	3020-704-1523	171	27
2995-960-3998	66		3020-704-1524	170	26
2995-960-3998	QC1	35	3020-704-1524	171	28
2995-960-3999	66	5A	3020-710-8519	233	9
2995-960-3999	QC1	34	3020-732-0197	197	28
3010-008-8849	67A	60	3020-753-0529	265	291
3010-552-0016	67	55	3020-753-0529	268	253
3010-781-6588	169	28	3020-764-7104	265	136
3020-019-5163	83	320A	3020-764-7104	268	92
3020-056-8610	81	184	3020-764-7105	265	135
3020-061-6030	83	78	3020-764-7105	268	91
3020-066-4057	192	104	3020-791-9383	265	285
3020-066-4061	233	9	3020-791-9383	268	247
3020-075-2492	192	121	3020-815-6684	81	133A
3020-084-0437	89	106	3020-815-6684	83	293
3020-085-5691	233	11	3020-830-4301	83	320A
3020-089-2514	265	286	3020-830-4311	81	181
3020-089-2514	268	248	3020-830-4312	81	192
3020-118-5659	81	141	3020-830-7952	76	165C
3020-118-5659	83	273	3020-830-7956	76	95
3020-134-8095	81	141	3020-830-7957	76	94
3020-134-8095	83	273	3020-839-6731	248	76
3020-134-8096	83	78	3020-903-3861	265	90
3020-134-8097	83	349	3020-903-3861	268	20
3020-134-8098	83	313	3020-936-8458	248	20
3020-141-8184	190	152	3020-956-2938	83	66
3020-141-8514	190	69	3020-956-9944	231	33
3020-181-2950	89	106	3040-004-1005	118	34A
3020-181-2952	76	165C	3040-014-4686	66	17
3020-189-6643	68	48	3040-014-4687	66	17
3020-204-2512	190	130	3040-042-9484	239	89
3020-204-2804	190	72	3040-050-6192	81	96

STOCK NUMBER	FIGURE NUMBER	ITEM NUMBER
3040-052-4381	248	51
3040-103-9516	42B	53A
3040-103-9517	42B	42
3040-107-1404	20	33
3040-134-8071	42B	42
3040-134-8117	75	20A
3040-180-6064	154	23
3040-181-2967	244	12A
3040-181-2968	244	6
3040-181-2971	244	21A
3040-181-2972	239	155
3040-181-2973	243	7
3040-181-2974	239	120
3040-181-2974	239	134
3040-181-2975	244	30A
3040-181-2977	239	56
3040-181-2978	239	89
3040-181-2979	222	199
3040-181-2979	222	79
3040-181-2980	222	
3040-181-2981	239	7
3040-181-2983	239	106A
3040-181-2983	239	175
3040-181-2984	243	6
3040-181-2985	243	5
3040-181-2986	243	7A
3040-181-2987	242	40
3040-181-2989	242	39
3040-181-2992	242	36
3040-181-2993	242	37
3040-181-2994	242	39
3040-181-2996	242	40
3040-181-2997	242	38
3040-181-2998	242	37
3040-181-2999	242	36
3040-181-4159	89	101A
3040-230-0447	68	28
3040-231-0443	66	5A
3040-247-0209	244	88A
3040-287-8938	62	19
3040-287-8938	QC1	183
3040-411-0013	190A	30
3040-411-0014	190A	29
3040-443-1077	20	25A
3040-445-7423	36B	5
3040-463-4775	66	5A
3040-490-5809	42B	53A
3040-491-0681	21	
3040-495-0196	68	27
3040-571-3495	239	120
3040-571-3495	239	134
3040-727-5054	230	34
3040-727-5054	231	80
3040-739-2555	93	8
3040-768-3221	68	52
3040-768-3221	183A	54
3040-783-6761	197	26
3040-806-2192	83	149
3040-829-6836	83	85
3040-836-8404	169	8
3040-862-9259	222	11A
3040-862-9263	222	11
3040-868-8428	244	
3040-868-8429	222	
3040-869-6315	83	216
3040-875-1464	25	2C
3040-875-1465	25	
3040-875-1466	24	3
3040-875-1467	24	4
3040-875-1468	24	6D
3040-883-1697	244	
3040-885-0049	20	110
3040-885-0061	20	110
3040-885-0062	15	31D
3040-885-8652	16	26C
3040-886-3371	226	7
3040-931-8309	20	49
3040-957-4107	228	77
3040-959-6190	230	73
3040-960-4079	26	19
3040-961-5818	240	
3040-963-1096	242	36
3040-968-4674	245	
3040-979-8755	34	34
3040-980-7318	240	
3040-980-7333	244	30A
3040-987-7507	222	41D
3040-996-7433	243	6
3040-996-7434	244	6
3040-996-7435	244	12A
3040-996-7442	243	7A
3110-011-9145	223	225
3110-011-9145	223	229
3110-011-9145	223	231
3110-011-9145	223	235
3110-011-9145	223	237
3110-011-9145	235	21
3110-011-9145	235	25
3110-011-9145	235	31
3110-011-9145	235	36
3110-014-2055	88	47
3110-014-5870	63	106
3110-014-5873	63	112
3110-027-4028	240	83
3110-027-4028	42B	57
3110-027-7423	239	46
3110-027-7423	239	80
3110-030-3381	223	143
3110-030-3381	226	30
3110-030-3381	228	166
3110-030-3381	228	179
3110-030-3381	228	190
3110-030-3381	265	245
3110-030-3381	265	247
3110-030-3381	265	252
3110-030-3381	268	174
3110-030-3381	268	191
3110-030-3381	268	212
3110-033-9851	71	134
3110-033-9851	223	133
3110-033-9851	223	200
3110-033-9851	223	217
3110-034-5257	223	59
3110-034-5801	76	73
3110-034-5802	76	66
3110-042-0440	222	123
3110-042-0440	222	135
3110-042-0440	237	16
3110-042-0440	237	44
3110-042-0440	239	126
3110-042-0440	239	149
3110-042-0440	239	178
3110-042-0444	238	29
3110-042-0444	239	113
3110-042-0444	239	142
3110-042-0444	239	160
3110-042-0444	240	64
3110-042-0444	240	71
3110-042-0444	240	89
3110-042-0444	240	95
3110-042-0444	240	98
3110-042-0445	238	24

STOCK NUMBER	FIGURE NUMBER	ITEM NUMBER	STOCK NUMBER	FIGURE NUMBER	ITEM NUMBER
3110-042-0998	265	300	3110-088-8626	223	
3110-042-0998	265	311	3110-100-2365	94	14
3110-042-0998	268	260	3110-100-2366	94	13
3110-042-4804	BULK		3110-100-3878	50	
3110-042-4805	228		3110-100-3878	55	
3110-042-4805	234	12	3110-100-5994	56	
3110-042-4805	234	47	3110-100-6147	74	45
3110-042-4805	234	58	3110-100-6158	20	
3110-042-4805	245		3110-100-6161	73	59I
3110-042-4805	245	3	3110-100-6162	73	39N
3110-042-4806	42B	54	3110-100-6162	73	61I
3110-042-4807	224	27	3110-101-8553	65	82
3110-042-4807	246	8A	3110-102-7568	65	37
3110-042-4809	229	14	3110-107-0721	81	144
3110-044-2269	146	20	3110-107-0721	83	288
3110-051-5626	89	60	3110-107-7572	265	202
3110-051-5627	81	146	3110-107-7572	265	204
3110-051-5627	83	289	3110-107-7572	268	160
3110-051-5630	81	153	3110-107-7572	268	223
3110-051-5630	83	282	3110-109-1103	265	293
3110-052-0393	89	76	3110-109-1103	265	56
3110-053-1709	248	48	3110-109-1103	268	254
3110-054-9102	265	87	3110-109-1103	268	7
3110-054-9102	268	16	3110-112-5881	26	3
3110-055-2980	26	20	3110-112-5892	26	6
3110-055-3545	63	122	3110-115-0759	230	63
3110-055-3546	63	118	3110-135-0559	71	36
3110-057-5643	91	20	3110-135-0560	71	35
3110-057-8305	76	168	3110-136-2741	63	111
3110-057-8306	81	168	3110-141-3750	75	134
3110-057-8306	83	310	3110-141-3750	75	175
3110-060-7911	76	147	3110-142-4314	42B	54
3110-060-7931	76	151	3110-142-4456	226	8
3110-060-7935	81	160	3110-142-4456	265	245
3110-060-7965	81	162	3110-142-4468	22	47
3110-063-8483	81	178			
3110-064-0281	222		3110-142-4476	42B	57
3110-064-0281	223		3110-142-4485	239	161
3110-064-0281	228		3110-142-4492	265	300
3110-064-0281	228	19	3110-142-6867	190A	27
3110-064-0281	237	26	3110-142-6868	190A	36
3110-064-0281	237	54	3110-142-6869	190A	28
3110-064-0281	244		3110-146-1339	210	
3110-065-0048	149	105	3110-151-5128	68	74
3110-065-0048	274	67	3110-151-9206	125	9
3110-065-0049	149	39	3110-155-4214	81	139
3110-065-0051	149	108	3110-155-4214	83	270
3110-065-0051	274	70	3110-155-7437	60	39
3110-065-0225	149	106	3110-155-7437	61	41
3110-065-0225	274	68	3110-155-8872	26	15
3110-065-5537	66		3110-155-9628	268	211
3110-065-5537	66	6	3110-156-7729	26	6
3110-066-5286	89	57	3110-159-1636	222	
3110-067-8289	89	111	3110-159-1636	228	
3110-067-8300	89	116	3110-159-1636	237	25
3110-067-8301	89	73	3110-159-1636	237	53
3110-068-8119	223	224	3110-165-5935	67A	55A
3110-068-9395	BULK		3110-173-5066	228	
3110-071-5414	75	134	3110-173-5075	234	1
3110-071-5414	75	175	3110-179-7348	71	108
3110-072-5392	83	242	3110-179-7349	71	109
3110-076-3584	232	36	3110-183-6716	148	17A
3110-076-3698	205	17	3110-183-7537	79	39
3110-079-8894	71	36	3110-183-7537	96	22
3110-079-8895	71	108	3110-183-7537	122	44
3110-079-8898	71	109	3110-183-7537	125	47
3110-080-7860	71	35	3110-183-7537	130	29
3110-083-1282	134	61	3110-183-7537	149	16
3110-086-1569	267	62	3110-183-7537	149	29
3110-086-1581	267	60	3110-183-7537	274	48
3110-086-1583	267	59	3110-183-7542	273	22A

STOCK NUMBER	FIGURE NUMBER	ITEM NUMBER	STOCK NUMBER	FIGURE NUMBER	ITEM NUMBER
3110-183-7542	273	29	3110-516-5413	247	13
3110-183-9175	124	29	3110-516-5413	265	84
3110-183-9175	225	12	3110-516-5413	268	27
3110-186-6302	68	25	3110-540-8067	42B	74
3110-190-9288	265	189	3110-554-1228	42A	31
3110-190-9288	265	192	3110-554-1228	42B	86
3110-190-9288	268	163	3110-554-1228	42C	32
3110-191-2505	68	26	3110-554-2928	230	32
3110-198-0252	239		3110-554-2928	230	60
3110-198-0336	42B	75A	3110-554-2928	231	30
3110-198-0431	230	53	3110-554-2928	231	75
3110-198-1083	26	3	3110-554-2928	231	78
3110-198-2801	42A	16	3110-554-5245	252	12
3110-198-2801	42C	17	3110-554-5957	154	36
3110-198-2844	230	67	3110-554-6034	265	278
3110-198-2844	231	56	3110-554-6034	268	237
3110-227-2362	154	34	3110-555-5233	265	295
3110-227-2599	239	180	3110-555-5233	265	55
3110-227-2803	49	27	3110-555-5233	268	14
3110-227-2808	270	59	3110-555-5233	268	256
3110-227-2822	59	13	3110-562-8457	183	61
3110-227-2823	270	58	3110-580-3843	26	25
3110-227-4128	266	41	3110-590-1001	215	58
3110-227-4589	263	8A	3110-591-9914	197	25
3110-227-4589	264	16	3110-620-2824	192	122
3110-230-0473	68	70	3110-620-2824	233	28
3110-230-0474	68	77	3110-620-2825	233	2
3110-230-0491	68	36	3110-626-5987	239	28
3110-230-0501	68	47	3110-626-5987	239	62
3110-240-9629	230	42	3110-654-9000	266	43
3110-240-9629	230	55	3110-657-2973	239	32
3110-240-9629	231	72	3110-657-2973	239	66
3110-240-9629	231	91	3110-678-1866	134	10
3110-241-9666	68	30	3110-702-1452	29	
3110-275-0263	154	36	3110-707-3556	231	48
3110-275-0265	154	32	3110-726-6244	245	22
3110-277-0119	215	9	3110-727-5039	134	71
3110-277-0256	265	290	3110-731-8123	71	36
3110-277-0256	265	292	3110-734-4510	216	80
3110-277-0256	265	91	3110-761-0652	190A	35
3110-277-0256	265	93	3110-761-4200	149	88
3110-277-0256	268	21	3110-788-1406	26	5
3110-277-0256	268	252	3110-795-4985	66	18
3110-278-6895	F15	12	3110-795-4985	66	9
3110-278-7148	224	27	3110-795-4985	234	22
3110-278-7148	226	10	3110-795-4985	234	48
3110-293-8584	25	19	3110-800-1334	102	29
3110-293-8584	25	9	3110-800-1334	103	25
3110-293-8818	265	259	3110-801-4938	230	83
3110-293-8818	265	263	3110-808-2088	25	19
3110-293-8818	268	188	3110-808-2088	25	9
3110-293-9047	26	15	3110-808-2088	223	176
3110-293-9196	239	32	3110-808-2088	223	185
3110-293-9196	239	66	3110-828-3228	88	40
3110-293-9225	BULK		3110-828-3229	76	66
3110-293-9227	223	66	3110-828-3230	88	70
3110-400-3415	63	49	3110-828-3231	88	84
3110-405-0502	68	38	3110-828-5174	76	70
3110-405-4647	67A	27	3110-829-7711	224	5
3110-427-8058	67A	76	3110-829-8332	83	325
3110-428-6505	67A	51	3110-830-1706	63	76
3110-432-2540	67A	77	3110-833-9071	81	160
3110-434-5819	150A	10	3110-833-9073	83	334
3110-453-6301	63	77	3110-833-9074	83	147
3110-455-6179	71	35	3110-833-9075	83	198
3110-455-6188	71	36	3110-833-9076	81	85
3110-457-9871	160	56	3110-833-9076	83	231
3110-461-5555	64	13	3110-833-9078	76	151
3110-493-4048	192	122	3110-833-9082	88	73
3110-493-4048	233	28	3110-833-9353	83	67
3110-498-6978	67	69	3110-833-9353	83	70

STOCK NUMBER	FIGURE NUMBER	ITEM NUMBER	STOCK NUMBER	FIGURE NUMBER	ITEM NUMBER
3110-833-9353	83	73	3110-932-5599	239	179
3110-833-9353	83	83	3110-932-7735	71	36
3110-833-9353	83	90	3110-932-7736	71	35
3110-833-9355	91	20	3110-932-7737	71	109
3110-833-9357	76	147	3110-932-7738	71	108
3110-834-3812	81	178	3110-935-5634	248	45
3110-834-3813	81	89	3110-935-5785	81	85
3110-834-3813	83	227	3110-935-5785	83	231
3110-834-3814	83	325	3110-943-8093	67	63
3110-834-3815	83	331	3110-943-8094	67	62
3110-834-3816	81	139	3110-944-5841	138	68
3110-834-3816	83	270	3110-946-0546	88	40
3110-834-3817	83	189	3110-946-4876	88	47
3110-834-3818	76	96	3110-948-4019	67	28
3110-834-3818	83	145	3110-950-4351	83	242
3110-834-3819	81	190	3110-954-5730	71	76
3110-834-3819	83	80	3110-958-7324	134	25
3110-834-3819	83	86	3110-963-7293	83	242
3110-834-8015	81	162	3110-971-0661	138	54
3110-835-4954	148	17	3110-971-0663	138	56
3110-836-0442	81	168	3110-984-0276	76	73
3110-836-0442	83	310	3110-987-2044	215	60
3110-836-0443	83	346	3110-992-1062	148	26
3110-836-0443	88	79	3110-995-3507	71	35
3110-836-0445	76	168	3110-996-7498	71	36
3110-836-0446	83	342	3120-001-9345	69	2A
3110-836-0447	76	153	3120-001-9346	69	2A
3110-836-0449	92	32	3120-001-9346	70	16A
3110-836-0449	92	86	3120-003-3253	118	91
3110-836-0450	76	91	3120-003-3254	118	88A
3110-836-0451	88	44	3120-003-3256	11C	39
3110-837-3199	272	29	3120-003-3256	222	100
3110-838-2932	71	109	3120-003-3256	222	184
3110-838-2934	71	35	3120-003-6121	118	106A
3110-838-5033	124	45	3120-003-6122	118	40B
3110-838-5033	126	7	3120-003-6127	11C	39
3110-838-5033	128	20	3120-004-1020	118	101
3110-838-5033	272	19	3120-004-6930	102	7F
3110-838-5033	64A	9	3120-004-6930	103	6D
3110-838-7064	71	75	3120-004-8896	60	15
3110-840-2727	88	66	3120-005-5874	42A	41
3110-840-2728	76	173	3120-005-5874	42C	38
3110-840-8271	71	108	3120-011-9167	75	24A
3110-848-4994	81	89	3120-011-9167	75	41
3110-848-4994	83	227	3120-014-1318	69	2
3110-854-4540	266	39	3120-014-1318	70	16
3110-856-6608	81	93			
3110-856-6608	83	222	3120-037-8974	69	2
3110-856-7383	228	21	3120-043-1476	21	
3110-869-9583	124	60	3120-043-1476	240	81
3110-869-9583	64A	42	3120-051-9757	11C	35
3110-871-0270	165	86	3120-051-9757	222	
3110-881-0269	89	120	3120-051-9757	222	169
3110-883-6432	103	26	3120-051-9757	222	64
3110-897-2951	63	79	3120-051-9757	244	
3110-900-3459	248	67	3120-051-9770	274	14
3110-900-7489	265	289	3120-052-6317	75	76
3110-900-7489	268	251	3120-055-2983	26	26
			3120-055-6041	240	97
3110-902-3409	91	20	3120-056-4320	11C	40
3110-911-9490	230	86	3120-056-4320	222	170
3110-913-4203	88	84	3120-056-4320	222	63
3110-915-0459	233	3	3120-056-4321	11C	42
3110-917-1991	148	29	3120-057-8310	72	84
3110-922-0739	89	73	3120-057-8310	74	77
3110-925-7082	149	91	3120-062-4459	134	68
3110-930-4596	67	45	3120-064-5562	75	24
3110-932-3675	138	65	3120-064-5562	75	74
3110-932-3678	75	134	3120-067-5101	82	13
3110-932-3678	75	175	3120-067-5101	82	34
3110-932-3679	138	62	3120-069-1181	78	26

STOCK NUMBER	FIGURE NUMBER	ITEM NUMBER
3120-071-8247	72	85
3120-071-8247	74	76
3120-073-8298	75	113
3120-076-2702	128	38
3120-080-7378	72	22
3120-080-7378	72	53
3120-080-7378	73	21
3120-081-9336	134	70
3120-088-9678	233	
3120-089-2725	60	27
3120-089-2725	61	29
3120-089-2725	F17	36
3120-089-2726	F17	15
3120-089-7421	74	29
3120-089-9447	11B	89
3120-089-9717	11B	92
3120-103-0010	71	67
3120-103-0011	71	66
3120-104-4660	71	60
3120-105-6264	222	
3120-105-6264	222	211
3120-105-6264	244	
3120-105-6264	248	59
3120-105-8373	275	
3120-106-5803	11B	75
3120-106-5804	11B	75
3120-110-8541	102	31
3120-110-8541	103	27A
3120-110-8541	244	
3120-110-8542	244	
3120-118-5732	244	
3120-118-5741	244	
3120-119-1134	244	
3120-119-1140	75	80
3120-119-1141	75	82
3120-119-4066	244	
3120-121-1120	244	
3120-122-5300	102	29B
3120-122-5300	102	31
3120-122-5300	103	27
3120-122-5300	103	27A
3120-122-5300	222	
3120-122-5300	244	
3120-122-5300	248	44
3120-125-4194	103	27
3120-125-4194	103	27A
3120-133-6471	173	23A
3120-133-6475	BULK	
3120-133-6476	42B	82
3120-133-6477	BULK	
3120-133-6478	BULK	
3120-133-6542	240	85
3120-136-1283	75	188
3120-136-1284	75	191
3120-138-4082	71	104B
3120-138-4083	71	104A
3120-151-5049	183A	83
3120-159-7016	11C	44B
3120-159-7133	11C	44A
3120-163-2827	223	165
3120-165-6018	42B	19A
3120-179-7319	11C	39
3120-179-7569	63	72
3120-179-7654	190A	15
3120-180-6704	72	22
3120-180-6704	72	53
3120-180-6704	73	21
3120-180-6705	72	18
3120-180-6705	72	49
3120-180-6705	73	12
3120-180-6829	11B	73
3120-180-6987	11B	
3120-180-6993	11B	
3120-180-7711	42B	19A
3120-182-8579	65	66
3120-189-6677	183A	48
3120-231-8964	11	82B
3120-231-8964	11	82C
3120-245-8519	20	28
3120-250-1151	75	189
3120-286-1221	190	
3120-286-1221	190	79
3120-287-6988	17	23
3120-287-6989	BULK	
3120-287-6990	223	128
3120-287-6990	235	27
3120-287-6990	235	33
3120-287-6990	239	63
3120-287-6991	20	
3120-287-6991	20	26
3120-287-6991	20	52
3120-287-6991	223	140
3120-287-6991	223	172
3120-287-6991	223	173
3120-287-6991	223	210
3120-287-6991	223	222
3120-287-6991	223	227
3120-287-6991	223	233
3120-287-6991	226	17
3120-287-6991	228	164
3120-287-6991	235	23
3120-287-6991	238	32
3120-287-6991	239	137
3120-287-6991	239	146
3120-287-6992	10	3
3120-287-6992	20	
3120-287-6992	34	
3120-287-6992	223	119
3120-287-6992	223	129
3120-287-6992	223	181
3120-287-6992	223	182
3120-287-6992	223	195
3120-287-6992	223	196
3120-287-6992	223	211
3120-287-6992	223	212
3120-287-6992	223	60
3120-287-6992	240	50
3120-287-6992	242	28
3120-287-6992	273	22C
3120-287-6992	42B	40
3120-287-6993	223	153
3120-287-6993	223	67
3120-287-6993	235	17
3120-287-6993	235	28
3120-287-6993	236	18
3120-287-6993	238	25
3120-287-6993	239	124
3120-287-6993	239	29
3120-287-6993	239	37
3120-287-6993	239	70
3120-287-6993	244	125
3120-287-6993	244	136
3120-287-6994	228	
3120-287-6995	240	59
3120-287-7009	11C	32
3120-287-7009	244	150
3120-287-7010	11C	64
3120-287-7010	244	148
3120-287-7933	62	30
3120-287-7933	QC1	
3120-287-7933	11A	1D

STOCK NUMBER	FIGURE NUMBER	ITEM NUMBER
3120-287-7933	223	220
3120-287-7933	223	239
3120-287-7935	238	50
3120-287-7935	239	168
3120-287-7935	240	51
3120-287-7935	240	77
3120-287-7935	243	23
3120-287-7935	244	104
3120-287-7935	244	126
3120-287-7936	236	6
3120-287-7936	239	122
3120-287-7936	239	145
3120-287-7936	239	174
3120-287-7936	243	16
3120-287-7936	244	137
3120-287-7939	236	19
3120-287-7939	239	158
3120-287-7939	240	91
3120-287-7963	11	11A
3120-287-7963	236	13
3120-287-9711	239	112
3120-287-9730	20	
3120-287-9751	11A	38
3120-287-9751	223	155
3120-287-9751	223	197
3120-287-9751	223	198
3120-287-9751	235	19
3120-287-9751	235	30
3120-287-9753	42B	41
3120-287-9753	42B	55
3120-287-9754	11	113
3120-287-9754	11	117
3120-287-9754	11	119
3120-287-9754	16	8
3120-287-9754	228	178
3120-287-9754	228	189
3120-287-9785	275	
3120-288-2218	11B	17
3120-288-2218	11B	41
3120-288-2223	11	53
3120-288-2224	11B	91
3120-288-2236	21	77
3120-288-2242	42B	48
3120-288-2243	21	65
3120-288-2243	223	244
3120-288-2332	245	26
3120-288-2368	228	163
3120-293-4481	215	30
3120-293-4481	215	36
3120-400-5499	65	60
3120-404-6269	11B	93
3120-404-6270	11B	88
3120-410-5948	239	
3120-410-5949	239	
3120-411-0033	222	
3120-411-0033	240	86
3120-411-0033	243	
3120-411-0033	244	
3120-411-0034	222	
3120-411-0034	244	
3120-411-0036	239	
3120-411-0036	240	11
3120-411-0036	240	44
3120-411-0036	240	54
3120-411-0036	243	13
3120-411-0036	244	108
3120-411-0036	244	119
3120-411-0036	244	141
3120-411-0037	239	
3120-411-0038	238	51
3120-411-0038	239	
3120-411-4092	239	
3120-411-4092	240	21
3120-411-4093	236	10
3120-411-4093	236	23
3120-411-4093	243	20
3120-411-4093	243	27
3120-411-4093	244	130
3120-411-4093	248	44
3120-411-4104	248	59
3120-435-7893	71	125
3120-442-6264	65	19
3120-448-4251	270	21
3120-453-9553	102	7F
3120-453-9553	103	6D
3120-463-4815	190A	39
3120-483-8435	60	46
3120-483-8435	61	48
3120-485-7604	64A	24
3120-485-7605	11B	74
3120-485-9776	64A	62
3120-487-8138	239	26
3120-487-8138	239	60
3120-488-1496	20	
3120-489-8450	190A	43
3120-516-0367	266	40
3120-516-0906	11B	92
3120-516-1524	240	66
3120-516-1527	228	162
3120-516-1532	13	94F
3120-516-1532	22	23
3120-516-1532	37	43
3120-516-1533	33	
3120-516-1534	22	13
3120-516-1540	BULK	
3120-516-1803	BULK	
3120-516-1808	32	
3120-516-1808	32	23
3120-516-1849	31	30
3120-516-1852	BULK	
3120-516-1860	11	70A
3120-516-1872	11B	11B
3120-516-1872	243	31
3120-516-1872	243	33
3120-516-1875	11	17
3120-516-1875	236	25
3120-516-1909	11	133A
3120-516-1966	37	
3120-516-2434	222	118
3120-516-2434	222	130
3120-516-2434	235	18
3120-516-2434	237	11
3120-516-2434	237	39
3120-516-2434	240	39
3120-516-2434	240	58
3120-516-2798	15	20
3120-516-2798	245	27
3120-516-9743	216	24
3120-517-0080	228	
3120-517-8355	62	23
3120-517-8355	239	109
3120-517-8364	11C	31
3120-517-8364	11C	61
3120-517-8364	244	143
3120-517-8364	244	149
3120-517-8385	BULK	
3120-517-8391	11B	40
3120-517-8391	11B	40A
3120-517-8409	20	
3120-517-8413	BULK	
3120-517-8420	F15	36
3120-517-8420	F15	42

STOCK NUMBER	FIGURE NUMBER	ITEM NUMBER
3120-517-8432	BULK	
3120-517-8437	223	100
3120-517-8596	223	221
3120-517-8697	11A	1C
3120-517-8698	44	36
3120-517-8698	45	4
3120-517-8702	11C	63
3120-517-8702	239	69
3120-517-8702	239	78
3120-517-8702	244	147
3120-522-3833	20	
3120-540-8747	BULK	
3120-540-9687	192	107
3120-540-9687	233	13
3120-554-0576	11C	34
3120-554-0576	11C	41
3120-554-4305	228	92
3120-554-4842	BULK	
3120-554-5427	62	29
3120-554-5427	QC1	
3120-555-5352	21	96
3120-555-6108	21	26E
3120-580-1384	11C	33
3120-580-1384	222	101
3120-580-1384	222	183
3120-585-1488	239	157
3120-585-1488	240	92
3120-585-4766	223	243
3120-585-4766	239	45
3120-585-4766	240	40
3120-585-4766	240	60
3120-585-4766	243	10
3120-585-4837	22	52
3120-585-5839	BULK	
3120-590-0551	75	112
3120-661-3360	11B	13B
3120-661-3905	223	120
3120-661-3905	223	215
3120-661-3909	11C	62
3120-661-3909	240	68
3120-661-3909	244	144
3120-661-3966	20	
3120-661-3966	20	101A
3120-661-3966	42B	22
3120-661-4131	BULK	
3120-661-4135	222	121
3120-661-4135	222	132
3120-661-4135	237	13
3120-661-4135	237	42
3120-661-4181	223	61
3120-661-4185	15	19
3120-661-4185	223	130
3120-661-4201	273	22D
3120-661-4204	11B	32
3120-661-4204	243	30
3120-661-4232	11C	57
3120-661-4232	244	145
3120-661-4251	16	14
3120-661-4251	223	214
3120-661-4251	226	18
3120-661-4251	42B	76
3120-661-4272	22	16
3120-661-4272	222	133
3120-661-4272	237	14
3120-661-4313	15	18
3120-661-4313	42A	42
3120-661-4313	42C	39
3120-661-4314	239	159
3120-661-4317	22	28
3120-661-4317	244	138
3120-661-4329	222	120
3120-661-4329	237	41
3120-661-4329	240	93
3120-661-4331	236	20
3120-661-4331	244	127
3120-661-4340	BULK	
3120-661-4347	244	116
3120-661-4349	21	62
3120-661-4356	223	240
3120-661-4361	11B	11A
3120-661-4361	243	34
3120-661-4367	22	51
3120-661-4373	239	123
3120-661-4373	239	147
3120-661-4373	243	17
3120-661-4373	243	24
3120-661-4373	244	105
3120-661-4374	223	156
3120-661-4377	239	169
3120-661-5099	BULK	
3120-661-5165	235	34
3120-661-5192	223	157
3120-661-5408	15	28
3120-661-5408	15	29
3120-661-5408	223	223
3120-661-5408	235	29
3120-661-5418	20	
3120-661-5418	20	27
3120-661-5418	20	53
3120-661-5418	25	3
3120-661-5418	37	42
3120-661-5418	235	35
3120-661-5419	10	2
3120-661-5419	223	174
3120-661-5419	223	175
3120-661-5419	223	213
3120-661-5419	42A	20
3120-661-5419	42B	26
3120-661-5419	42C	21
3120-661-5422	223	68
3120-661-5423	17	8
3120-661-5423	20	
3120-661-5423	223	141
3120-661-6841	62	22
3120-661-6971	11	112
3120-661-6971	11	116
3120-661-6971	11	118
3120-661-6971	228	177
3120-661-6971	228	188
3120-661-6971	236	5
3120-661-6971	239	138
3120-661-6976	31	
3120-661-6976	31	25D
3120-661-6979	222	119
3120-661-6979	237	40
3120-661-6979	244	115
3120-661-7339	21	15
3120-661-7339	223	96
3120-661-7341	20	101B
3120-661-7341	20	91
3120-661-7348	11	11
3120-661-7348	236	12
3120-661-7358	11B	31
3120-661-7358	239	136
3120-661-7358	240	78
3120-661-7358	243	29
3120-661-7363	42A	41
3120-661-7363	42C	38
3120-661-7365	238	30
3120-661-7380	42B	23
3120-661-7484	15	32
3120-661-7484	16	29

STOCK NUMBER	FIGURE NUMBER	ITEM NUMBER	STOCK NUMBER	FIGURE NUMBER	ITEM NUMBER
3120-661-8451	22	4	3120-816-2503	11	18
3120-661-8456	25	5	3120-816-2503	236	26
3120-662-1030	245	4	3120-824-1599	71	125
3120-662-1030	246	8B	3120-826-5460	223	157
3120-662-3942	230	70	3120-826-5460	236	7
3120-662-3942	231	93	3120-826-8541	190	148
3120-662-6989	223	131	3120-826-8541	190	80
3120-662-6989	223	183	3120-826-8544	190	147
3120-662-6989	223	184	3120-827-0402	11C	58
3120-662-6989	228	165	3120-827-0402	244	146
3120-662-6989	235	24	3120-830-1038	21	95
3120-671-7196	11B	13A	3120-832-5339	75	38
3120-671-7196	243	32	3120-834-1507	222	
3120-671-7197	11	18	3120-834-1507	222	211
3120-671-7203	11B	91	3120-834-1507	244	
3120-671-7209	32		3120-834-2193	60	29
3120-671-7212	270	34	3120-834-2193	61	31
3120-684-2398	BULK		3120-835-1480	240	42
3120-701-0071	265	88	3120-835-1480	243	18
3120-701-0071	268	19	3120-835-1480	243	25
3120-702-2843	265	304	3120-835-1480	244	106
3120-702-2843	268	263	3120-835-4962	236	21
3120-702-6792	149	28	3120-836-2584	16	17
3120-723-9464	230	71	3120-836-2584	244	
3120-723-9464	231	94	3120-836-2585	31	
3120-726-2996	228	90	3120-836-2585	42B	47
3120-727-4749	11C	29B	3120-836-2586	11B	39C
3120-740-6467	71	101	3120-837-9887	236	8
3120-740-6473	71	34	3120-837-9888	54	49
3120-760-4230	212	20	3120-838-8588	31	29
3120-761-2857	BULK		3120-839-0743	20	29
3120-771-5947	75	81	3120-839-0743	20	54
3120-771-5981	75	80	3120-839-7093	BULK	
3120-771-6025	75	154	3120-843-8270	71	67
3120-771-6025	75	179	3120-846-9298	75	140
3120-774-9457	102	32	3120-846-9303	75	124
3120-778-8854	75	156	3120-846-9303	75	172
3120-778-8854	75	181	3120-846-9304	75	43
3120-780-7827	239	176	3120-846-9308	75	142
3120-780-8382	239	36	3120-847-1123	75	141
3120-780-8382	239	71	3120-847-1126	92	4
3120-780-8383	239	30	3120-847-1126	92	62
3120-780-8383	239	64	3120-847-1126	KITS	
3120-780-8384	239	140	3120-849-4375	75	70
3120-780-8385	239	141	3120-849-4376	75	171
3120-780-8386	239	148	3120-849-4377	75	43
3120-780-8387	239	79	3120-849-4507	BULK	
3120-780-8388	239	125	3120-849-7606	228	91
3120-780-8389	239	68	3120-849-7761	72	19
3120-780-8390	239	82	3120-849-7761	72	50
3120-780-8391	239	139	3120-849-7761	73	20
3120-780-8392	239	48	3120-849-7854	223	169
3120-780-8393	239	108	3120-849-8921	269	13
3120-780-8394	239	171	3120-850-4817	71	73B
3120-780-8395	239	34	3120-850-4852	45	
3120-781-4495	102	34	3120-851-9280	20	37
3120-781-5912	239	44	3120-853-4151	BULK	
3120-781-5914	239	173	3120-856-3208	226	29
3120-782-7160	63	109	3120-859-8051	11C	39
3120-788-0316	222		3120-859-8051	222	100
3120-788-0316	244		3120-859-8051	222	184
3120-792-5076	54	38	3120-862-9157	72	15
3120-803-5312	11B	102	3120-862-9279	223	82
3120-806-4971	239	35	3120-862-9294	80	24
3120-806-4971	239	49	3120-865-2903	59	40
3120-807-2307	BULK		3120-865-2904	44	24
3120-807-3282	11B	90	3120-865-3193	72	103
3120-812-3020	62		3120-865-3193	KITS	
3120-812-3020	11B	20	3120-865-3195	71	66A
3120-813-9349	72	83	3120-865-7495	59	41
3120-813-9349	74	29	3120-865-7500	59	42

STOCK NUMBER	FIGURE NUMBER	ITEM NUMBER
3120-865-8571	37A	42
3120-865-9695	11A	88
3120-866-6099	75	153
3120-866-6099	75	178
3120-866-6100	75	155
3120-866-6100	75	180
3120-866-6100	75	190
3120-867-9000	239	
3120-867-9001	239	
3120-867-9002	49	61
3120-867-9002	51	70
3120-867-9003	49	57E
3120-867-9003	51	68
3120-868-1096	63	121
3120-877-5609	21	
3120-877-6155	11C	29A
3120-878-5583	11	5
3120-878-5583	81	214
3120-878-5584	75	51
3120-880-1223	222	
3120-880-1224	222	
3120-880-1224	244	
3120-880-2605	244	
3120-880-2606	222	
3120-880-2606	244	
3120-880-6409	222	
3120-880-6409	244	
3120-880-6909	54	2
3120-881-0015	20	
3120-881-0160	71	67A
3120-881-1297	BULK	
3120-881-4196	25	4
3120-882-1625	24	8
3120-882-1626	11B	20
3120-882-8131	240	30
3120-882-8132	235	6
3120-882-8133	235	20
3120-882-8133	238	26
3120-882-8133	238	33
3120-882-8277	11B	101
3120-882-8303	11C	38
3120-883-6430	75	60
3120-884-1934	222	
3120-884-1934	244	
3120-891-1433	71	69A
3120-891-1434	72	67
3120-891-1434	KITS	
3120-891-4678	238	31
3120-891-6535	75	60
3120-893-4545	71	73
3120-895-9414	83	333
3120-895-9469	83	178
3120-897-3715	71	68A
3120-897-3768	248	54
3120-897-6510	75	77
3120-897-7623	75	137
3120-897-7624	75	123
3120-897-7625	75	125
3120-898-7922	73	55
3120-899-2466	81	114
3120-899-2468	81	105
3120-899-2468	11C	34
3120-900-5030	49	19
3120-900-5750	75	59
3120-900-5751	75	51
3120-900-5756	75	72
3120-900-5762	75	49
3120-900-5762	75	49A
3120-900-6739	49	20
3120-901-2979	49	18
3120-901-6224	71	133
3120-901-9243	192	
3120-904-9860	239	100
3120-904-9872	240	79
3120-904-9872	244	117
3120-904-9876	240	80
3120-904-9876	240	94
3120-904-9961	274	26
3120-905-7232	62	
3120-905-8923	11C	58
3120-913-2350	118	
3120-913-2620	118	88
3120-913-3997	268	180
3120-913-3997	268	206
3120-913-3998	268	200
3120-913-4000	268	199
3120-914-4718	265	
3120-914-4718	268	172B
3120-914-8358	76	181
3120-914-8358	11B	107
3120-915-8908	44	35
3120-915-8908	45	5
3120-916-2519	62	22
3120-916-2519	11B	39
3120-916-2519	11B	39A
3120-922-2706	75	57
3120-922-2706	75	57A
3120-923-2819	75	37
3120-923-3192	222	
3120-923-4123	239	26
3120-923-4123	239	60
3120-925-9945	73	24
3120-927-7412	239	
3120-927-7413	239	
3120-930-9385	238	10
3120-931-4790	BULK	
3120-931-4803	16	20
3120-931-4803	16	7
3120-936-9591	15	37
3120-937-1715	243	11
3120-937-9186	190A	25
3120-937-9186	190A	41
3120-941-6659	75	23
3120-943-5507	222	131
3120-943-5507	237	12
3120-943-5508	223	154
3120-943-9977	228	161
3120-943-9977	229	15
3120-943-9977	245	5
3120-943-9977	246	8C
3120-944-2563	20	
3120-944-2564	31	28
3120-944-2565	31	28A
3120-944-2904	75	138
3120-944-2918	BULK	
3120-944-4275	103	27A
3120-944-4848	BULK	
3120-944-7488	240	67
3120-944-7565	238	22
3120-944-7566	31	29
3120-944-7582	239	110
3120-944-7584	238	53
3120-944-7588	11	11
3120-944-7588	264	12
3120-944-7589	239	111
3120-944-7594	239	170
3120-945-0854	22	10
3120-945-0854	22	20
3120-945-4564	BULK	
3120-945-4850	22	14
3120-945-4853	21	
3120-945-5599	31	20

STOCK NUMBER	FIGURE NUMBER	ITEM NUMBER	STOCK NUMBER	FIGURE NUMBER	ITEM NUMBER
3120-945-8071	239	172	3120-991-7027	102	51
3120-947-3135	22	10	3120-991-7027	103	44
3120-947-3135	22	20	3120-997-8990	BULK	
3120-947-3135	264	11	3130-004-1015	89	64A
3120-947-9809	22	46	3130-102-3927	71	63
3120-947-9810	238	23	3130-105-2959	71	62
3120-948-9370	36	12	3130-158-1818	67A	31
3120-948-9371	20		3130-241-5259	190A	23
3120-948-9372	BULK		3130-253-1535	80	12
3120-948-9373	240	69	3130-253-1536	76	44
3120-949-7744	223	158	3130-253-1537	76	46C
3120-949-7746	239	27	3130-253-1538	76	46A
3120-949-7746	239	61	3130-253-1539	89	80
3120-952-2957	240	70	3130-253-1540	89	33
3120-954-1288	80	23	3130-253-1541	89	34
3120-954-8516	75	72	3130-253-1542	89	123
3120-955-9394	75	59	3130-593-4784	149	19A
3120-957-3759	223	228	3130-881-9522	81	170
3120-957-3759	223	234	3439-141-8244	BULK	
3120-957-3759	240	41	3439-224-3567	BULK	
3120-957-3759	240	61	3439-273-8824	BULK	
3120-957-7132	239		3439-288-1469	BULK	
3120-959-0513	45		3439-400-1971	BULK	
3120-959-0513	54	9	3439-411-5097	BULK	
3120-959-3577	240	52	3439-464-4774	BULK	
3120-959-3578	240	62	3439-935-7863	BULK	
3120-960-3967	75	139	3465-228-8805	A2	4
3120-960-3968	75	78	3465-228-8810	A2	3
3120-964-1410	244	128	3465-228-8811	A2	3
3120-964-1410	244	139	3465-228-8813	A2	3
3120-971-6354	BULK		3465-228-8815	A2	6
3120-971-6355	BULK		3910-926-1056	F23	
3120-973-2070	239	24	3940-134-9218	263	13B
3120-975-1776	21	26D	3940-756-2764	263	13
3120-975-2162	BULK		3940-868-7019	263	14A
3120-975-2163	20		3940-909-1332	F15	14
3120-975-2165	BULK		3940-938-1708	263	6A
3120-975-2166	BULK		3950-836-3278	F10	2D
3120-975-2169	16	2	4010-056-0555	BULK	
3120-975-2173	11C	13A	4010-071-0876	F15	13
3120-978-2186	44	20	4010-071-0877	F15	13A
3120-978-2186	53	3	4010-071-0878	F10	2E
3120-978-2191	228	130A	4010-071-4498	28	
3120-978-2192	228	130A	4010-074-9949	18	35
3120-978-2193	228	130	4010-074-9949	18	85
3120-978-2194	228	130	4010-075-7941	45	
3120-978-9612	53	44	4010-089-3389	31	2
3120-979-5614	51	65	4010-222-4474	BULK	
3120-979-8958	238	49	4010-222-4482	BULK	
3120-980-7321	238	19	4010-262-1551	BULK	
3120-982-0910	238	49A	4010-554-8661	BULK	
3120-982-0979	11	37	4010-633-5974	BULK	
3120-983-7408	75	57	4010-759-8862	34	
3120-983-7408	75	57A	4010-782-1180	31	
3120-983-7802	11	85A	4010-782-1181	31	1
3120-983-7807	118	107	4010-788-5728	36	
3120-983-8070	240	31	4010-788-5728	36	7
3120-983-9640	16	16	4010-824-0845	18	36
3120-983-9640	16	19	4010-863-1139	263	2E
3120-984-0272	118	106	4010-907-8396	62	2
3120-984-0277	238	9	4010-907-8396	KITS	
3120-985-3410	238	18	4010-926-4680	31	
3120-985-4441	75	49	4010-926-4681	31	
3120-985-4441	75	49A	4010-937-5523	61	12
3120-987-7539	75	69	4010-944-4854	BULK	
3120-988-4557	75	59	4010-956-9903	265	308
3120-988-4558	75	72	4010-956-9903	268	269
3120-989-0548	32		4010-983-7570	22	44
3120-989-4284	240	88	4010-989-7633	32	58
3120-989-9812	81	104	4010-989-7633	KITS	
3120-989-9812	11C	36	4010-997-8819	BULK	

STOCK NUMBER	FIGURE NUMBER	ITEM NUMBER
4020-202-1345	BULK	
4020-202-1924	BULK	
4020-240-2154	BULK	
4020-246-0688	BULK	
4020-247-1737	BULK	
4020-262-2019	BULK	
4020-954-1118	BULK	
4020-968-1356	BULK	
4030-015-3896	36	11C
4030-078-4307	BULK	
4030-082-0655	BULK	
4030-082-0656	BULK	
4030-132-9147	60	
4030-132-9147	60	11
4030-132-9147	61	
4030-132-9148	60	
4030-132-9148	61	
4030-132-9151	263	5E
4030-171-4912	60	
4030-171-4912	61	
4030-182-8183	270	5
4030-182-8676	263	1
4030-262-1878	60	
4030-262-1878	61	
4030-273-3079	270	
4030-273-3081	BULK	
4030-282-4885	263	
4030-310-5913	F2	5
4030-431-5536	34	
4030-431-5536	36	
4030-431-5536	62	
4030-431-5536	62	15
4030-431-5536	F20	20
4030-431-5536	F20	32
4030-431-5536	263	14A
4030-431-5536	263	9
4030-431-5536	BULK	
4030-580-6793	22	
4030-682-2385	F10	2C
4030-759-4189	37	
4030-801-5342	BULK	
4030-878-5594	263	3
4030-878-8693	28	24C
4030-878-8693	BULK	
4030-885-8718	263	4
4030-958-8039	BULK	
4030-981-3048	263	11B
4140-113-8215	210	102
4140-740-3369	252	
4140-872-1131	251	12
4140-872-1131	252	
4140-941-4098	251	12
4140-955-9734	135	
4210-163-5814	258	3
4210-440-3222	34	
4210-454-8788	258	2
4210-455-6135	258	1
4210-455-6136	258	3
4210-555-8837	34	11
4210-555-8837	34	12
4210-555-8837	34	58
4210-708-0031	34	
4240-540-1517	34	
4320-016-2886	83	5
4320-016-2886	149	
4320-022-5288	138	16A
4320-128-7429	83	14
4320-128-7429	134	
4320-229-6664	83	21
4320-488-5328	213	35
4320-488-5328	215	
4320-488-5328	220	33
4320-488-5328	221	1
4320-541-6954	119	37A
4320-541-6954	145	
4320-861-3148	A12	8
4320-891-1357	78	15A
4320-891-1357	78	20A
4320-936-4328	83	21
4320-956-2970	81	51
4320-956-2972	83	52
4320-996-3901	83	21
4330-076-6021	A10	
4330-918-1890	79	25
4330-961-5845	79	24
4330-961-5847	79	20
4710-011-0848	137	32
4710-142-3010	BULK	
4710-177-0155	95	17
4710-177-0156	95	16
4710-177-0157	95	131
4710-203-6244	BULK	
4710-234-6288	190A	45
4710-278-1972	BULK	
4710-278-2101	BULK	
4710-278-2907	BULK	
4710-278-3281	BULK	
4710-278-3282	BULK	
4710-278-3291	BULK	
4710-278-3294	BULK	
4710-278-3302	BULK	
4710-278-6381	BULK	
4710-278-6398	BULK	
4710-278-6434	BULK	
4710-278-8723	BULK	
4710-278-8724	BULK	
4710-278-8726	BULK	
4710-278-8733	BULK	
4710-278-8740	BULK	
4710-278-8742	BULK	
4710-279-0020	BULK	
4710-279-0897	BULK	
4710-279-0899	BULK	
4710-279-0917	BULK	
4710-279-0950	BULK	
4710-289-2780	BULK	
4710-289-2781	BULK	
4710-289-2914	BULK	
4710-420-4789	BULK	
4710-491-9758	220	9
4710-491-9758	221	71
4710-491-9759	220	8
4710-491-9759	221	29
4710-541-4932	BULK	
4710-588-3577	92	35
4710-595-2413	BULK	
4710-595-2416	BULK	
4710-684-5074	BULK	
4710-728-8405	BULK	
4710-731-1546	BULK	
4710-757-2894	139	48
4710-813-9872	BULK	
4710-881-4385	72	31
4710-881-4385	72	62
4710-881-4385	73	7
4710-891-3156	135	5
4710-933-4415	BULK	
4710-933-4417	BULK	
4710-957-6693	BULK	
4720-018-2426	253	30A
4720-018-2430	253	25
4720-018-2431	253	30B

STOCK NUMBER	FIGURE NUMBER	ITEM NUMBER
4720-058-3266	62	31
4720-073-5405	129	76
4720-074-0963	BULK	
4720-074-0963	KITS	
4720-077-8783	95	54
4720-084-0429	95	45
4720-102-2776	213	51
4720-102-2776	220	
4720-104-6700	95	67
4720-141-9157	178	13
4720-141-9157	178	26
4720-150-6129	129	67
4720-150-6131	129	66
4720-176-4309	217B	8
4720-181-8687	BULK	
4720-181-9370	221	129
4720-189-9715	BULK	
4720-200-0414	178	1
4720-200-0414	178	24
4720-200-0414	179	11
4720-200-0425	179	27
4720-200-0425	180	31
4720-225-9109	BULK	
4720-225-9110	BULK	
4720-225-9111	BULK	
4720-225-9112	BULK	
4720-225-9113	BULK	
4720-225-9114	BULK	
4720-225-9115	BULK	
4720-231-2483	BULK	
4720-235-1775	BULK	
4720-235-1778	BULK	
4720-237-5655	249	24
4720-246-4354	BULK	
4720-271-9841	BULK	
4720-277-2889	BULK	
4720-278-1096	BULK	
4720-278-1107	BULK	
4720-278-1111	BULK	
4720-278-1323	BULK	
4720-289-2953	178	13
4720-289-2953	178	26
4720-289-2976	178	14
4720-289-2976	178	27
4720-289-2976	178	9
4720-421-1321	BULK	
4720-421-1321	KITS	
4720-540-1368	BULK	
4720-540-3644	BULK	
4720-540-6434	BULK	
4720-540-6434	KITS	
4720-541-8328	BULK	
4720-541-9281	BULK	
4720-541-9281	KITS	
4720-555-3499	BULK	
4720-555-3499	KITS	
4720-571-3694	273	7
4720-580-6618	BULK	
4720-580-6618	KITS	
4720-580-6944	BULK	
4720-580-6944	KITS	
4720-595-1088	BULK	
4720-595-1089	BULK	
4720-611-2548	BULK	
4720-611-2548	KITS	
4720-684-0260	BULK	
4720-730-7109	QC1	8
4720-730-7109	249	22
4720-803-7157	BULK	
4720-803-7157	KITS	
4720-809-2889	BULK	
4720-815-6354	BULK	
4720-815-6354	KITS	
4720-829-2223	196	4
4720-857-1729	BULK	
4720-857-1729	KITS	
4720-857-1730	BULK	
4720-857-1730	KITS	
4720-857-1731	BULK	
4720-857-1731	KITS	
4720-857-1732	BULK	
4720-857-1732	KITS	
4720-857-1733	BULK	
4720-857-1734	BULK	
4720-857-1734	KITS	
4720-857-1735	BULK	
4720-857-1736	BULK	
4720-860-0625	83	63
4720-860-5543	BULK	
4720-867-8944	A10	
4720-871-5762	115	48
4720-881-0032	95	127
4720-881-0042	95	113
4720-886-1418	BULK	
4720-898-4534	213	48
4720-898-4534	220	48
4720-898-4535	213	49
4720-898-4535	220	49
4720-901-7653	129	
4720-902-7157	129	109
4720-903-8612	QC1	7
4720-903-8612	249	17
4720-914-5743	95	145
4720-914-5744	95	45
4720-914-5744	QC1	175
4720-943-2427	253	49
4720-943-2429	251	57
4720-943-2433	251	49
4720-975-2885	BULK	
4720-975-2885	KITS	
4720-978-6237	129	85
4720-988-9947	62	31
4720-988-9947	QC1	24
4730-013-6969	BULK	
4730-013-6969	KITS	
4730-013-6970	BULK	
4730-013-6970	KITS	
4730-015-1418	BULK	
4730-017-8234	BULK	
4730-017-8661	BULK	
4730-017-8846	BULK	
4730-017-8886	BULK	
4730-017-8887	BULK	
4730-050-4203	51	15
4730-050-4203	59	46
4730-050-4203	92	27
4730-050-4203	92	81
4730-050-4203	118	76
4730-050-4205	49	66
4730-050-4205	BULK	
4730-051-3612	BULK	
4730-052-7691	BULK	
4730-052-7694	BULK	
4730-052-9517	BULK	
4730-052-9518	BULK	
4730-052-9520	BULK	
4730-053-0379	BULK	
4730-053-0379	KITS	
4730-053-0380	BULK	
4730-053-0380	KITS	
4730-053-0389	BULK	
4730-053-0389	KITS	

STOCK NUMBER	FIGURE NUMBER	ITEM NUMBER
4730-053-0391	BULK	
4730-053-0391	KITS	
4730-053-0395	BULK	
4730-053-0395	KITS	
4730-053-0411	BULK	
4730-053-0411	KITS	
4730-053-0415	BULK	
4730-053-0415	KITS	
4730-053-0416	BULK	
4730-053-0416	KITS	
4730-053-0418	BULK	
4730-053-0418	KITS	
4730-054-7633	BULK	
4730-054-7633	KITS	
4730-054-7635	BULK	
4730-054-7635	KITS	
4730-054-7650	BULK	
4730-054-7650	KITS	
4730-054-7661	BULK	
4730-054-7661	KITS	
4730-055-2973	67A	42
4730-057-0663	BULK	
4730-057-0663	KITS	
4730-057-0664	BULK	
4730-057-0664	KITS	
4730-057-0665	BULK	
4730-057-0665	KITS	
4730-057-4553	129	
4730-057-4553	KITS	
4730-057-4554	BULK	
4730-057-6427	BULK	
4730-057-6427	KITS	
4730-057-6733	QC1	99
4730-057-6733	143	16
4730-059-0943	130	3
4730-060-2852	BULK	
4730-062-1174	273	8
4730-062-6821	BULK	
4730-062-7437	BULK	
4730-064-1824	213	
4730-071-1275	73	28E
4730-071-1275	73	63A
4730-073-8704	220	5
4730-073-8704	221	2
4730-073-8805	220	6
4730-073-8805	221	3
4730-073-8806	221	57
4730-073-9770	102	8
4730-078-5503	62	63
4730-078-5503	QC1	75
4730-078-5503	217	
4730-078-5503	217A	24
4730-078-5503	217B	25
4730-080-0334	213	20
4730-080-0334	213	28
4730-080-7890	220	15
4730-080-7890	221	36
4730-087-1008	BULK	
4730-087-1010	BULK	
4730-087-1010	KITS	
4730-087-1015	BULK	
4730-087-1015	KITS	
4730-087-1016	BULK	
4730-087-1016	KITS	
4730-088-6705	95	125
4730-088-6705	95	130
4730-088-6705	95	5
4730-089-6303	BULK	
4730-097-8195	74	85
4730-100-4332	218	20
4730-100-4332	219A	144
4730-100-4332	219A	149
4730-100-4332	219A	43
4730-100-4335	218	20A
4730-100-4335	219A	146
4730-100-4335	219A	45
4730-105-6025	BULK	
4730-106-4416	BULK	
4730-106-4416	BULK	
4730-106-4416	KITS	
4730-106-4417	KITS	
4730-106-7431	69	1
4730-106-7431	70	15
4730-114-0933	BULK	
4730-114-0933	KITS	
4730-114-0934	BULK	
4730-114-0934	KITS	
4730-128-9819	BULK	
4730-132-3163	KITS	
4730-135-4608	221	103
4730-135-8851	BULK	
4730-141-1067	218	20
4730-141-1067	219A	144
4730-141-1067	219A	149
4730-141-1067	219A	43
4730-141-1068	218	20A
4730-141-1068	219A	146
4730-141-1068	219A	45
4730-142-1571	BULK	
4730-142-2155	76	144
4730-142-2155	93	18
4730-142-2155	93	25
4730-142-2155	109	58D
4730-142-2155	110	
4730-142-2155	110	14
4730-142-2155	110	42
4730-142-2155	110	69
4730-142-2155	110	91
4730-142-2155	112	12
4730-142-2155	112	122
4730-142-2155	112	143
4730-142-2155	112	87
4730-142-2155	112	90
4730-142-2155	115	24
4730-142-2155	115	29
4730-142-2155	115	32
4730-142-2155	115	36
4730-142-2155	115	39
4730-142-2155	115	5
4730-142-2155	116	
4730-142-2155	117	
4730-142-2155	117	19B
4730-142-2155	117	71A
4730-142-2155	119	
4730-142-2155	119	130
4730-142-2155	119	141
4730-142-2155	119	160
4730-142-2155	119	180
4730-142-2155	119	274
4730-142-2155	119	293
4730-142-2155	119	76
4730-142-2155	129	
4730-142-2155	129	138
4730-142-2155	129	149
4730-142-2155	129	55A
4730-142-2155	129	83
4730-142-2155	129	85A
4730-142-2155	148	4
4730-142-2155	178	58
4730-142-2155	179	21
4730-142-2155	179	6
4730-142-2155	180	10

STOCK NUMBER	FIGURE NUMBER	ITEM NUMBER
4730-142-2155	180	5
4730-142-2155	257	12
4730-142-2155	257	21
4730-142-2155	KITS	
4730-142-2167	BULK	
4730-151-4049	218	20B
4730-168-1782	BULK	
4730-168-1782	KITS	
4730-172-0010	93	28
4730-176-9674	76	144D
4730-186-9518	95	77
4730-186-9518	KITS	
4730-186-9961	262	55
4730-186-9977	83	259
4730-186-9997	221	125
4730-186-9997	221	19
4730-186-9997	221	25
4730-186-9997	221	79
4730-186-9997	221	90
4730-187-0087	179	14
4730-187-0087	179	30
4730-188-3493	BULK	
4730-194-1055	BULK	
4730-196-9584	81	7A
4730-196-9584	83	365
4730-197-2919	34	
4730-202-8859	93	23
4730-202-9169	BULK	
4730-203-0246	BULK	
4730-203-1066	251	26
4730-203-1066	251	28
4730-203-2661	BULK	
4730-203-2662	BULK	
4730-203-2982	BULK	
4730-203-3689	119	266
4730-203-3689	119	339
4730-203-4782	BULK	
4730-203-7304	BULK	
4730-203-9235	129	1A
4730-203-9235	129	10A
4730-203-9749	BULK	
4730-204-1972	117	
4730-221-2128	34	
4730-221-2134	BULK	
4730-221-2137	261	1
4730-221-2137	261	3
4730-222-1915	BULK	
4730-222-1915	KITS	
4730-222-9636	83	179
4730-223-9269	81	194
4730-223-9269	83	363
4730-231-1331	QC1	91
4730-231-1332	129	111A
4730-231-1332	KITS	
4730-231-4009	257	2A
4730-237-5470	219	52
4730-237-5471	219	52
4730-240-5905	178	10
4730-240-5905	178	11
4730-240-5905	178	22
4730-240-5905	178	23
4730-240-5905	178	25
4730-240-5905	178	3
4730-242-5918	62	
4730-244-9853	74	83
4730-246-9519	95	168
4730-246-9520	109	20
4730-246-9520	109	71
4730-246-9520	109	74
4730-246-9520	110	64
4730-246-9520	112	14
4730-246-9520	112	33
4730-246-9520	117	58A
4730-246-9520	117	91
4730-246-9520	117	94
4730-246-9520	129	
4730-246-9520	129	37
4730-246-9520	129	70B
4730-246-9520	139	111
4730-274-7120	BULK	
4730-274-7500	109	57
4730-274-7500	112	125
4730-274-7500	112	135
4730-274-7500	112	143
4730-274-7500	112	67
4730-274-7500	112	97
4730-274-7500	115	15
4730-274-7500	115	26
4730-274-7500	115	34
4730-274-7500	117	
4730-274-7500	119	117
4730-274-7500	119	12
4730-274-7500	119	128
4730-274-7500	119	136
4730-274-7500	119	175
4730-274-7500	119	26
4730-274-7500	119	276
4730-274-7500	119	40
4730-274-7500	119	71
4730-274-7500	129	81A
4730-274-7500	129	82A
4730-274-7500	129	95D
4730-274-7500	180	15
4730-274-7500	257	18
4730-274-7500	KITS	
4730-277-2461	BULK	
4730-277-2462	BULK	
4730-277-2576	251	58
4730-277-4749	51	81
4730-277-4749	BULK	
4730-277-5026	QC1	119
4730-277-5026	110	35
4730-277-5026	129	70A
4730-277-5026	143	24
4730-277-5026	221	37
4730-277-5077	129	2A
4730-277-5077	129	46A
4730-277-5077	129	46C
4730-277-5077	129	71A
4730-277-5077	129	72A
4730-277-5077	129	98
4730-277-5077	139	97
4730-277-5078	QC1	90
4730-277-5078	129	10A
4730-277-5078	143	10
4730-277-5080	119	338
4730-277-5080	129	1A
4730-277-5080	129	75B
4730-277-5081	109	16
4730-277-5081	109	46
4730-277-5081	117	73B
4730-277-5081	117	79C
4730-277-5081	129	122
4730-277-5081	129	145
4730-277-5081	129	97
4730-277-5081	139	25
4730-277-5081	139	35
4730-277-5081	139	76
4730-277-5081	139	83
4730-277-5082	QC1	84
4730-277-5082	119	269
4730-277-5082	119	342

STOCK NUMBER	FIGURE NUMBER	ITEM NUMBER	STOCK NUMBER	FIGURE NUMBER	ITEM NUMBER
4730-277-5082	143	5	4730-277-6371	112	143
4730-277-5083	QC1	130	4730-277-6371	112	149
4730-277-5083	QC1	95	4730-277-6371	112	151
4730-277-5083	109	14C	4730-277-6371	112	159
4730-277-5083	109	3	4730-277-6371	112	167
4730-277-5083	109	40	4730-277-6371	112	6
4730-277-5083	109	50	4730-277-6371	112	64
4730-277-5083	109	53C	4730-277-6371	112	67
4730-277-5083	109	55A	4730-277-6371	112	74
4730-277-5083	109	71C	4730-277-6371	112	95
4730-277-5083	112	1	4730-277-6371	112	97
4730-277-5083	112	14	4730-277-6371	117	
4730-277-5083	112	18	4730-277-6371	117	75C
4730-277-5083	112	22	4730-277-6371	117	83
4730-277-5083	112	29	4730-277-6371	117	95J
4730-277-5083	112	33	4730-277-6371	119	
4730-277-5083	112	35	4730-277-6371	119	121
4730-277-5083	112	38	4730-277-6371	119	131
4730-277-5083	112	44	4730-277-6371	119	14
4730-277-5083	112	48	4730-277-6371	119	148
4730-277-5083	116		4730-277-6371	119	163
4730-277-5083	117	58A	4730-277-6371	119	214
4730-277-5083	117	95B	4730-277-6371	119	224
4730-277-5083	119	285	4730-277-6371	119	229
4730-277-5083	119	307	4730-277-6371	119	279
4730-277-5083	119	316	4730-277-6371	119	28
4730-277-5083	119	327	4730-277-6371	119	366
4730-277-5083	129		4730-277-6371	119	397
4730-277-5083	129	109B	4730-277-6371	119	41
4730-277-5083	129	111A	4730-277-6371	119	71
4730-277-5083	129	44A	4730-277-6371	119	80
4730-277-5083	129	67B	4730-277-6371	119	98
4730-277-5083	129	70A	4730-277-6371	129	
4730-277-5083	129	70B	4730-277-6371	129	143
4730-277-5083	139	111	4730-277-6371	129	25A
4730-277-5083	139	23	4730-277-6371	129	35B
4730-277-5083	139	4	4730-277-6371	129	52A
4730-277-5083	139	45	4730-277-6371	129	82A
4730-277-5083	139	57	4730-277-6371	129	95B
4730-277-5083	139	72	4730-277-6371	129	95D
4730-277-5083	139	99	4730-277-6371	129	95G
4730-277-5083	KITS		4730-277-6371	139	113
4730-277-5084	119	327	4730-277-6371	139	2
4730-277-5095	129	109A	4730-277-6371	139	61
4730-277-5095	129	15A	4730-277-6371	143	26
4730-277-5095	129	18A	4730-277-6371	146	7
4730-277-5095	129	27A	4730-277-6371	KITS	
4730-277-5095	129	63A	4730-277-6372	44	32
4730-277-5095	129	78A	4730-277-6372	115	46
4730-277-5095	139	37	4730-277-6372	117	2A
4730-277-5095	139	38	4730-277-6372	117	2B
4730-277-5095	139	85	4730-277-6372	117	4A
4730-277-5095	139	86	4730-277-6372	117	6A
4730-277-5095	KITS		4730-277-6372	119	
4730-277-5096	BULK		4730-277-6372	119	197
4730-277-5098	BULK		4730-277-6372	119	201
4730-277-5157	BULK		4730-277-6372	119	347
4730-277-5373	BULK		4730-277-6372	KITS	
4730-277-6371	QC1	104	4730-277-6437	BULK	
4730-277-6371	QC1	114	4730-277-6455	129	71A
4730-277-6371	109	1	4730-277-6836	221	22
4730-277-6371	109	42	4730-277-6836	221	37
4730-277-6371	109	57C	4730-277-6836	KITS	
4730-277-6371	109	60C	4730-277-9250	129	
4730-277-6371	110	47	4730-277-9250	129	27A
4730-277-6371	110	7	4730-277-9254	109	16
4730-277-6371	112	123	4730-277-9254	109	46
4730-277-6371	112	129	4730-277-9254	129	119
4730-277-6371	112	133	4730-277-9254	129	39
4730-277-6371	112	137	4730-277-9254	129	49
4730-277-6371	112	141	4730-277-9254	139	25

STOCK NUMBER	FIGURE NUMBER	ITEM NUMBER
4730-277-9254	139	76
4730-277-9256	109	18
4730-277-9256	109	23
4730-277-9256	109	29
4730-277-9256	109	35
4730-277-9256	109	50
4730-277-9256	110	34
4730-277-9256	110	78
4730-277-9256	112	18
4730-277-9256	117	19M
4730-277-9256	117	65
4730-277-9256	119	232
4730-277-9256	129	85B
4730-277-9256	129	90A
4730-277-9256	139	23
4730-277-9256	139	72
4730-277-9256	178	132
4730-277-9256	KITS	
4730-277-9257	109	27
4730-277-9257	112	29
4730-277-9257	117	50
4730-277-9257	117	94
4730-277-9257	119	282
4730-277-9257	119	309
4730-277-9257	119	311
4730-277-9257	129	68A
4730-277-9306	119	108
4730-277-9306	119	121
4730-277-9306	119	36
4730-277-9306	119	58
4730-277-9306	129	84A
4730-277-9306	KITS	
4730-278-0314	213	
4730-278-0314	220	
4730-278-0314	221	109
4730-278-0314	221	92
4730-278-0314	KITS	
4730-278-0375	262	28
4730-278-0678	BULK	
4730-278-2434	109	80
4730-278-2434	116	
4730-278-2434	117	102
4730-278-2434	117	107
4730-278-2434	117	57A
4730-278-2434	178	30
4730-278-2589	112	100
4730-278-2589	112	103
4730-278-2589	112	111
4730-278-2589	112	117
4730-278-2589	112	66
4730-278-2589	112	92
4730-278-2589	119	105
4730-278-2589	119	112
4730-278-2589	119	151
4730-278-2589	119	84
4730-278-2589	119	9
4730-278-2589	178	31
4730-278-2589	179	18
4730-278-2589	179	3
4730-278-2589	KITS	
4730-278-2770	251	37
4730-278-2771	44	29
4730-278-2771	KITS	
4730-278-2779	119	258
4730-278-2779	139	33
4730-278-2779	139	81
4730-278-2782	BULK	
4730-278-2785	218	72
4730-278-2785	221	125
4730-278-2785	221	135
4730-278-2785	221	90
4730-278-2785	221	96
4730-278-2785	221	98
4730-278-2786	129	46C
4730-278-2965	261	2
4730-278-3122	BULK	
4730-278-3682	93	20
4730-278-3682	117	83
4730-278-3682	119	400
4730-278-3682	129	
4730-278-3682	KITS	
4730-278-3683	QC1	131
4730-278-3683	112	15
4730-278-3683	221	38
4730-278-5006	178	99
4730-278-5006	217A	3
4730-278-5024	QC1	102
4730-278-5652	75	148
4730-278-5652	75	162
4730-278-5652	75	194
4730-278-5757	21	
4730-278-6070	BULK	
4730-278-8160	109	14
4730-278-8160	109	3
4730-278-8160	109	38
4730-278-8160	109	40
4730-278-8160	109	53
4730-278-8160	109	8
4730-278-8160	110	80
4730-278-8160	112	1
4730-278-8160	112	22
4730-278-8160	112	38
4730-278-8160	116	
4730-278-8160	117	58E
4730-278-8160	117	95A
4730-278-8160	117	98
4730-278-8160	119	237
4730-278-8160	119	242
4730-278-8160	119	304
4730-278-8160	129	
4730-278-8160	129	109B
4730-278-8160	129	44A
4730-278-8160	129	67B
4730-278-8160	139	105
4730-278-8160	139	15
4730-278-8160	139	27
4730-278-8160	139	4
4730-278-8160	139	45
4730-278-8160	139	47
4730-278-8160	139	57
4730-278-8160	139	95
4730-278-8160	178	129
4730-278-8160	178	78
4730-278-8161	KITS	
4730-278-8165	109	55
4730-278-8165	109	70
4730-278-8165	112	35
4730-278-8165	112	48
4730-278-8165	117	
4730-278-8165	119	237
4730-278-8165	129	111A
4730-278-8165	139	13
4730-278-8466	129	18
4730-278-8469	BULK	
4730-278-8470	119	349
4730-278-9095	76	11
4730-278-9095	81	8C
4730-278-9095	KITS	
4730-278-9096	208	12
4730-278-9096	213	
4730-278-9096	220	
4730-278-9096	KITS	

STOCK NUMBER	FIGURE NUMBER	ITEM NUMBER	STOCK NUMBER	FIGURE NUMBER	ITEM NUMBER
4730-278-9097	42	6B	4730-289-4206	129	16A
4730-278-9097	129		4730-289-4206	129	19A
4730-278-9097	KITS		4730-289-4206	129	45A
4730-278-9099	QC1	66	4730-289-5146	213	
4730-278-9099	207		4730-289-5146	213	10
4730-278-9099	217		4730-289-5146	220	
4730-278-9099	KITS		4730-289-5146	221	33
4730-278-9099	217A	16	4730-289-5146	221	41
4730-278-9099	217B	18	4730-289-5146	221	56
4730-278-9100	62	32	4730-289-5146	221	57
4730-278-9100	QC1	23	4730-289-5146	221	69
4730-278-9102	BULK		4730-289-5146	KITS	
4730-278-9104	95	147	4730-289-5438	BULK	
4730-278-9138	196	4	4730-289-5894	QC1	
4730-278-9138	KITS		4730-289-5894	249	18
4730-278-9140	BULK		4730-289-5894	249	23
4730-278-9210	251	6B	4730-289-5894	249	25
4730-278-9442	BULK		4730-289-5894	KITS	
4730-278-9443	BULK		4730-289-6015	213	7
4730-279-0122	213	30	4730-289-6089	QC1	132
4730-279-0163	129	66A	4730-289-6089	QC1	133
4730-279-0163	BULK		4730-289-6089	109	
4730-287-0065	BULK		4730-289-6089	109	22
4730-287-0288	BULK		4730-289-6089	109	25
4730-287-0289	BULK		4730-289-6089	109	62A
4730-287-0291	BULK		4730-289-6089	109	64
4730-287-1119	117	73A	4730-289-6089	109	77D
4730-287-1119	117	87	4730-289-6089	109	88
4730-287-1119	129		4730-289-6089	112	11
4730-287-1119	129	112A	4730-289-6089	112	19
4730-287-1119	129	97	4730-289-6089	112	30
4730-287-1119	139	31	4730-289-6089	112	42
4730-289-0222	BULK		4730-289-6089	112	52
4730-289-1162	BULK		4730-289-6089	116	
4730-289-1563	BULK		4730-289-6089	117	
4730-289-2697	112	129	4730-289-6089	117	105
4730-289-2697	112	133	4730-289-6089	117	58C
4730-289-2697	112	141	4730-289-6089	119	234
4730-289-2697	112	159	4730-289-6089	119	245
4730-289-2697	112	167	4730-289-6089	129	
4730-289-2697	119	102	4730-289-6089	129	74A
4730-289-2697	119	13	4730-289-6089	129	75A
4730-289-2697	119	27	4730-289-6089	139	101
4730-289-2697	119	39	4730-289-6089	139	41A
4730-289-2697	119	68	4730-289-6089	139	91
4730-289-2697	129	95B	4730-289-6089	139	93
4730-289-2697	KITS		4730-289-6089	143	
4730-289-2698	112	44	4730-289-6089	178	139
4730-289-2698	116		4730-289-6089	178	75
4730-289-2698	139	99	4730-289-6089	221	37
4730-289-2777	109	43	4730-289-6089	251	18A
4730-289-2777	109	5	4730-289-6089	KITS	
4730-289-2777	112	127	4730-289-6091	95	106
4730-289-2777	112	131	4730-289-6091	95	47
4730-289-2777	112	139	4730-289-6091	95	56
4730-289-2777	112	145	4730-289-6091	95	70
4730-289-2777	112	157	4730-289-6091	95	81
4730-289-2777	112	163	4730-289-6091	QC1	176
4730-289-2777	119		4730-289-6091	117	73H
4730-289-2777	139		4730-289-6091	129	
4730-289-2777	139	21	4730-289-6091	129	16A
4730-289-2777	139	70	4730-289-6091	129	18
4730-289-3067	BULK		4730-289-6091	KITS	
4730-289-3176	95	94	4730-289-6092	95	48
4730-289-3176	129	18A	4730-289-6092	95	55
4730-289-3176	129	78A	4730-289-6092	95	80
4730-289-3372	117	84	4730-289-6092	95	92
4730-289-3372	119	401	4730-289-6092	QC1	178
4730-289-3372	129		4730-289-6092	129	102B
4730-289-3372	KITS		4730-289-6092	129	107A
4730-289-4206	129		4730-289-6092	129	73A

STOCK NUMBER	FIGURE NUMBER	ITEM NUMBER	STOCK NUMBER	FIGURE NUMBER	ITEM NUMBER
4730-289-6092	139	49	4730-541-1749	178	135
4730-289-6093	95	19	4730-541-1749	178	36
4730-289-6093	95	29	4730-541-1749	221	63
4730-289-6093	95	33	4730-541-1751	117	
4730-289-6093	95	34	4730-541-1751	119	258
4730-289-8619	BULK		4730-541-1751	129	
4730-289-8620	BULK		4730-541-1751	KITS	
4730-289-8622	BULK		4730-541-1755	117	
4730-289-8623	BULK		4730-541-1755	119	260
4730-289-8624	BULK		4730-541-1755	139	33
4730-289-8626	BULK		4730-541-1755	139	81
4730-289-8633	BULK		4730-541-1755	BULK	
4730-302-8641	BULK		4730-541-1755	KITS	
4730-351-1741	117	84	4730-541-1756	117	
4730-351-1741	119	404	4730-541-1756	119	264
4730-351-1741	129		4730-541-2173	117	89
4730-363-9856	218	20B	4730-541-2173	129	124
4730-409-1017	51	84	4730-541-3154	BULK	
4730-433-2857	262	30	4730-541-3168	95	172
4730-457-0585	146	9A	4730-541-3168	109	48
4730-464-4214	BULK		4730-541-3168	117	79
4730-469-4982	72	92	4730-541-3168	129	144
4730-469-4982	74	3	4730-541-3169	BULK	
4730-480-5735	150	2	4730-541-4901	139	118
4730-529-3763	95	165	4730-541-6478	119	313
4730-529-3763	95	169	4730-541-6478	119	324
4730-529-3763	117	77A	4730-541-6479	115	46
4730-529-3763	117	81	4730-541-6490	44	28
4730-529-3763	119	311	4730-541-6490	115	45
4730-529-3763	119	349	4730-541-7002	129	
4730-529-3763	119	382	4730-541-7002	129	18
4730-529-3763	129		4730-541-7002	129	19A
4730-529-3763	129	106	4730-541-7002	KITS	
4730-529-3763	129	11	4730-541-7197	129	27A
4730-529-3763	139	79	4730-541-7198	119	
4730-529-3763	KITS		4730-541-7198	129	
4730-540-0351	117	89	4730-541-7725	BULK	
4730-540-6719	BULK		4730-541-8234	BULK	
4730-541-0844	BULK		4730-541-8296	217	
4730-541-1222	253	17	4730-541-8296	BULK	
4730-541-1222	253	7	4730-541-9105	BULK	
4730-541-1579	93	16	4730-554-7397	BULK	
4730-541-1749	QC1	124	4730-554-7398	BULK	
4730-541-1749	QC1	127	4730-554-7617	129	7A
4730-541-1749	QC1	135	4730-554-8015	BULK	
4730-541-1749	QC1	93	4730-554-8018	BULK	
4730-541-1749	109	70	4730-554-9181	119	256
4730-541-1749	109	73	4730-554-9211	95	51
4730-541-1749	109	86	4730-554-9211	129	46C
4730-541-1749	110	35	4730-554-9211	129	71A
4730-541-1749	110	84	4730-555-0595	BULK	
4730-541-1749	112	15	4730-555-8196	BULK	
4730-541-1749	112	62	4730-555-8203	BULK	
4730-541-1749	115	55	4730-555-8204	BULK	
4730-541-1749	115	57	4730-555-8205	BULK	
4730-541-1749	117		4730-580-2120	BULK	
4730-541-1749	117	100	4730-580-2527	129	2
4730-541-1749	117	19D	4730-580-2527	129	98
4730-541-1749	119	239	4730-580-6131	112	153
4730-541-1749	129	41C	4730-580-6131	112	161
4730-541-1749	129	70A	4730-580-6131	119	62
4730-541-1749	139		4730-580-6131	KITS	
4730-541-1749	139	108	4730-580-6417	251	54
4730-541-1749	139	18	4730-580-6417	253	20
4730-541-1749	139	28	4730-580-6417	253	39
4730-541-1749	139	43	4730-580-6418	251	52
4730-541-1749	139	59	4730-580-6418	255	8
4730-541-1749	139	67	4730-580-6421	255	6A
4730-541-1749	139	74	4730-580-6453	BULK	
4730-541-1749	139	8	4730-580-7471	BULK	
4730-541-1749	143	31	4730-580-9165	95	155

STOCK NUMBER	FIGURE NUMBER	ITEM NUMBER	STOCK NUMBER	FIGURE NUMBER	ITEM NUMBER
4730-580-9165	95	157	4730-618-8359	217A	3
4730-580-9165	109	32	4730-618-8359	217B	7
4730-580-9165	110		4730-618-8509	BULK	
4730-580-9165	110	39	4730-618-8650	95	50
4730-580-9165	110	68	4730-618-8650	KITS	
4730-580-9165	110	82	4730-618-8862	BULK	
4730-580-9165	115		4730-618-9032	QC1	81
4730-580-9165	115	1	4730-618-9032	143	2
4730-580-9165	115	10	4730-632-2002	BULK	
4730-580-9165	115	11	4730-640-0461	KITS	
4730-580-9165	115	13	4730-640-0598	95	93
4730-580-9165	115	19	4730-640-0598	95	98
4730-580-9165	115	22	4730-640-0598	129	109A
4730-580-9165	115	8	4730-640-0598	129	15A
4730-580-9165	117		4730-640-0632	44	27
4730-580-9165	117	19I	4730-640-0632	117	
4730-580-9165	117	83	4730-640-0632	KITS	
4730-580-9165	119		4730-640-0822	129	21A
4730-580-9165	119	120	4730-640-0830	95	160
4730-580-9165	119	143	4730-640-0830	109	1
4730-580-9165	119	212	4730-640-0830	109	42
4730-580-9165	119	247	4730-640-0830	109	60
4730-580-9165	119	396	4730-640-0830	110	20
4730-580-9165	119	88	4730-640-0830	110	25
4730-580-9165	129		4730-640-0830	110	30
4730-580-9165	129	35A	4730-640-0830	110	38
4730-580-9165	129	41A	4730-640-0830	110	42
4730-580-9165	139	63	4730-640-0830	110	47
4730-580-9165	178	39	4730-640-0830	110	7
4730-580-9165	180	20	4730-640-0830	110	85
4730-580-9165	180	25	4730-640-0830	112	123
4730-580-9165	257	16	4730-640-0830	112	137
4730-580-9165	257	5	4730-640-0830	112	147
4730-580-9165	257	7	4730-640-0830	112	149
4730-580-9165	KITS		4730-640-0830	112	151
4730-585-6212	BULK		4730-640-0830	112	155
4730-585-6645	129	124	4730-640-0830	112	165
4730-585-7485	129	9	4730-640-0830	112	169
4730-588-6979	117	69C	4730-640-0830	112	6
4730-588-6979	119	297	4730-640-0830	112	64
4730-588-6979	129	132	4730-640-0830	112	71
4730-588-6979	KITS		4730-640-0830	112	95
4730-595-0381	119	371	4730-640-0830	115	
4730-595-1749	42	7	4730-640-0830	115	3
4730-595-3102	BULK		4730-640-0830	116	
4730-595-3739	112	143	4730-640-0830	117	
4730-595-3739	112	153	4730-640-0830	117	25A
4730-595-3739	112	161	4730-640-0830	117	75
4730-595-3739	112	81	4730-640-0830	117	95F
4730-595-3739	119	62	4730-640-0830	119	
4730-595-3739	KITS		4730-640-0830	119	129
4730-595-4402	258	4	4730-640-0830	119	139
4730-602-9250	129	78A	4730-640-0830	119	148
4730-603-0771	62	60D	4730-640-0830	119	162
4730-603-0771	QC1	71	4730-640-0830	119	172
4730-603-0771	217	20	4730-640-0830	119	208
4730-603-0771	217A	3	4730-640-0830	119	214
4730-603-0771	217B	7	4730-640-0830	119	25
4730-603-0774	178	2	4730-640-0830	119	250
4730-603-0774	217B	30	4730-640-0830	119	344
4730-613-1859	BULK		4730-640-0830	119	363
4730-613-5293	178	5	4730-640-0830	119	80
4730-613-5293	217B	30	4730-640-0830	119	97
4730-618-5066	117	69A	4730-640-0830	129	140
4730-618-5066	129	130	4730-640-0830	129	25A
4730-618-5374	117	86	4730-640-0830	129	35B
4730-618-5374	129	102A	4730-640-0830	129	52A
4730-618-7378	BULK		4730-640-0830	135	6
4730-618-8359	62	60C	4730-640-0830	139	2
4730-618-8359	QC1	69	4730-640-0830	139	61
4730-618-8359	217	18	4730-640-0830	178	61

STOCK NUMBER	FIGURE NUMBER	ITEM NUMBER
4730-640-0830	257	9
4730-640-0830	KITS	
4730-640-0831	95	97
4730-640-0831	129	2A
4730-640-0831	129	72A
4730-640-0831	139	52
4730-640-1212	95	105
4730-640-1212	129	98
4730-640-1212	139	51
4730-640-1212	139	97
4730-640-1215	109	1
4730-640-1215	110	51
4730-640-1215	117	288
4730-640-1215	119	219
4730-640-1215	119	89
4730-640-1215	129	
4730-640-1215	129	61A
4730-640-1215	139	6
4730-640-1216	95	124
4730-640-1216	95	137
4730-640-1216	95	141
4730-640-1216	95	2
4730-640-1216	95	34
4730-640-1216	95	4
4730-640-1306	95	64
4730-640-1306	95	76
4730-640-1306	129	17
4730-640-1306	129	18
4730-640-1306	129	45A
4730-640-1306	129	88A
4730-640-1306	139	98
4730-640-1306	KITS	
4730-640-5040	129	44
4730-640-5040	129	46C
4730-640-5040	KITS	
4730-640-5042	129	46A
4730-640-5042	KITS	
4730-640-5098	135	8
4730-640-5098	180	30
4730-640-5098	KITS	
4730-640-5111	109	10
4730-640-5111	119	127
4730-640-5111	119	222
4730-640-5111	119	229
4730-640-5111	119	290
4730-640-5111	119	368
4730-640-5111	119	6
4730-640-5111	129	53
4730-640-5111	129	95G
4730-640-5112	117	43A
4730-640-5112	129	40A
4730-640-5113	129	46A
4730-640-5113	139	98
4730-640-5117	KITS	
4730-640-5118	129	
4730-640-5119	95	58
4730-640-5119	129	88A
4730-640-5120	129	79A
4730-640-5829	95	133
4730-640-5829	BULK	
4730-640-5856	QC1	96
4730-640-5856	143	11
4730-640-5857	95	79
4730-640-5857	139	33
4730-640-5857	139	81
4730-640-5858	119	254
4730-640-5858	119	391
4730-640-5858	KITS	
4730-640-5860	95	58
4730-640-7192	109	29
4730-640-7192	115	
4730-640-7192	116	
4730-640-7192	119	229
4730-640-7192	129	
4730-640-7192	139	16
4730-640-7192	139	67
4730-640-7199	109	
4730-640-7199	109	29
4730-640-7199	117	
4730-640-7199	119	311
4730-640-7199	119	349
4730-640-7199	129	110A
4730-640-7199	129	117
4730-640-7199	129	39
4730-640-7199	KITS	
4730-640-7200	95	143
4730-640-7200	95	8
4730-640-7200	109	
4730-640-7200	119	217
4730-640-7200	119	311
4730-640-7200	119	349
4730-640-7200	119	352
4730-640-7200	129	40A
4730-640-7200	139	25
4730-640-7200	139	76
4730-640-7200	KITS	
4730-640-7201	95	154
4730-640-7201	109	
4730-640-7201	109	12A
4730-640-7201	109	27
4730-640-7201	109	61D
4730-640-7201	110	33
4730-640-7201	110	34
4730-640-7201	110	35
4730-640-7201	110	78
4730-640-7201	112	24
4730-640-7201	112	29
4730-640-7201	116	
4730-640-7201	117	19M
4730-640-7201	117	50
4730-640-7201	119	19
4730-640-7201	119	223
4730-640-7201	119	302
4730-640-7201	119	309
4730-640-7201	119	311
4730-640-7201	119	356
4730-640-7201	129	70A
4730-640-7201	129	84A
4730-640-7201	129	85B
4730-640-7201	139	23
4730-640-7201	139	72
4730-640-7201	220	
4730-640-7201	KITS	
4730-640-7213	BULK	
4730-650-9250	QC1	86
4730-650-9250	117	36
4730-650-9250	119	253
4730-650-9251	129	2
4730-650-9251	129	98
4730-659-4618	95	5
4730-683-8838	129	
4730-684-0506	178	5
4730-684-0564	62	60A
4730-684-0564	QC1	68
4730-684-0564	217	17
4730-684-0564	217A	3
4730-684-0564	217B	7
4730-684-0738	62	74
4730-684-0738	QC1	142
4730-684-0738	217	
4730-684-0738	217A	18
4730-684-3567	129	

STOCK NUMBER	FIGURE NUMBER	ITEM NUMBER	STOCK NUMBER	FIGURE NUMBER	ITEM NUMBER
4730-684-3567	129	56A	4730-720-0231	BULK	
4730-684-3574	119	335	4730-720-0235	BULK	
4730-684-3574	129	10A	4730-720-0237	119	388
4730-684-3574	129	75B	4730-720-0243	213	8
4730-684-6903	178	20	4730-720-0288	BULK	
4730-684-6909	QC1	100	4730-720-0984	119	
4730-684-6909	143	15	4730-720-0984	119	185
4730-684-6909	BULK		4730-720-0984	119	208
4730-684-6911	BULK		4730-720-1100	117	2A
4730-684-6912	BULK		4730-720-1166	BULK	
4730-684-6913	211		4730-720-1445	QC1	87
4730-684-6913	213		4730-720-1445	119	332
4730-684-6913	213	24	4730-720-1445	143	7
4730-684-6913	218		4730-720-1514	129	7A
4730-684-6913	220		4730-720-1514	129	9
4730-684-6913	220	21	4730-720-1588	115	17
4730-684-6913	221	100	4730-720-1588	115	41
4730-684-6913	221	125	4730-720-1588	117	13A
4730-684-6913	221	135	4730-720-4984	BULK	
4730-684-6913	221	49	4730-722-0086	QC1	55
4730-684-6913	221	89	4730-722-0086	217	8
4730-684-6913	221	90	4730-722-1207	178	97
4730-684-6913	221	96	4730-722-1207	262	13
4730-684-6913	221	98	4730-722-3158	129	70B
4730-684-6913	BULK		4730-722-7214	BULK	
4730-684-6913	KITS		4730-722-7216	213	
4730-684-6915	BULK		4730-722-7216	213	17
4730-684-6916	115	41	4730-722-7216	220	
4730-684-6916	213		4730-722-7216	220	28
4730-684-6916	220	31	4730-722-7216	221	26
4730-684-6916	221	107	4730-722-7216	221	61
4730-684-6916	221	11	4730-722-7216	221	76
4730-684-6916	221	88	4730-723-3691	117	69
4730-684-6916	221	89	4730-723-3691	119	299
4730-684-6916	BULK		4730-723-3691	129	129
4730-684-6916	KITS		4730-723-3691	KITS	
4730-684-6916	219A	102	4730-725-0052	213	
4730-684-6916	219A	168	4730-725-0052	213	22
4730-684-6916	219A	63	4730-725-0052	213	31
4730-684-6918	119	286	4730-725-2825	119	301
4730-684-6918	KITS		4730-725-2825	KITS	
4730-684-6922	221	135	4730-725-3313	213	
4730-684-6922	221	59	4730-725-3313	220	29
4730-684-6922	221	89	4730-725-4351	QC1	62
4730-684-7081	BULK		4730-725-4351	178	15
4730-684-7157	BULK		4730-725-4351	179	25
4730-684-7161	BULK		4730-725-4351	217	
4730-684-7301	BULK		4730-725-4351	217A	11
4730-684-7303	BULK		4730-725-4351	217B	14
4730-684-7304	BULK		4730-726-8478	62	3
4730-684-7305	BULK		4730-726-8478	217	
4730-684-7446	258	6	4730-726-8478	217A	18
4730-684-7634	129	65A	4730-729-5733	129	7A
4730-684-7634	129	66A	4730-729-5733	129	9
4730-702-5377	115	53	4730-729-6118	115	50
4730-702-5377	117		4730-729-6118	117	4A
4730-702-5377	117	10B	4730-729-6118	119	197
4730-702-5377	117	3B	4730-738-6789	37	
4730-702-5377	119		4730-756-3045	QC1	80
4730-702-5377	119	189	4730-756-3045	117	35
4730-702-5377	119	193	4730-756-3045	119	262
4730-702-5377	119	195	4730-766-4613	139	38
4730-702-5377	119	199	4730-766-4613	139	86
4730-709-3887	BULK		4730-766-4614	139	78
4730-715-0018	179	24	4730-773-2613	213	42
4730-715-0018	179	9	4730-773-2613	221	7
4730-715-0018	213		4730-773-2613	273	10
4730-715-0018	262	40	4730-773-2620	273	10
4730-715-0018	262	49	4730-773-2620	BULK	
4730-715-0018	KITS		4730-789-4906	129	
4730-716-0968	133	11	4730-790-7387	129	1

STOCK NUMBER	FIGURE NUMBER	ITEM NUMBER	STOCK NUMBER	FIGURE NUMBER	ITEM NUMBER
4730-790-7387	129	97	4730-828-9981	219A	197
4730-793-0428	76	32A	4730-833-9669	BULK	
4730-795-0945	BULK		4730-834-9560	178	10
4730-800-3113	129	1A	4730-834-9560	178	25
4730-803-5049	221	81	4730-834-9560	178	3
4730-803-7981	QC1	137	4730-834-9560	179	12
4730-804-1932	BULK		4730-834-9560	179	28
4730-804-7915	QC1	107	4730-834-9560	180	32
4730-804-7915	QC1	117	4730-834-9560	213	
4730-804-7915	112	85	4730-834-9560	217	
4730-804-7915	117	65	4730-834-9560	262	42
4730-804-7915	119	17	4730-834-9560	KITS	
4730-804-7915	119	280	4730-837-1484	253	4
4730-804-7915	119	44	4730-837-1484	KITS	
4730-804-7915	129	90A	4730-841-0339	73	28E
4730-804-7915	143	29	4730-841-0340	73	28E
4730-804-7915	KITS		4730-842-1139	BULK	
4730-807-2274	117	2B	4730-842-2199	BULK	
4730-807-2274	117	6A	4730-842-8467	A2	5
4730-807-2274	119		4730-843-0269	BULK	
4730-807-2274	119	184	4730-843-5432	129	65A
4730-807-2274	119	201	4730-843-9671	119	332
4730-807-9606	139	35	4730-843-9837	119	394
4730-807-9606	139	83	4730-851-6627	112	143
4730-808-9106	146	6A	4730-866-1829	BULK	
4730-809-5999	218	65	4730-866-1835	BULK	
4730-810-0198	251		4730-867-1171	94	17
4730-810-0198	251	35	4730-869-6652	95	48
4730-810-4499	BULK		4730-871-6951	32	
4730-810-8828	220		4730-871-8733	105	
4730-810-8828	221	35	4730-872-3294	99	1
4730-810-8828	221	59	4730-873-5715	BULK	
4730-810-8828	KITS		4730-878-4744	112	80
4730-812-4150	129	2	4730-884-1232	BULK	
4730-812-4150	129	98	4730-884-1232	KITS	
4730-812-6916	129	1	4730-886-2369	BULK	
4730-812-6916	129	97	4730-887-6224	211	15
4730-812-7405	BULK		4730-889-2262	BULK	
4730-813-6923	BULK		4730-889-2465	BULK	
4730-815-3329	119	388	4730-889-2465	KITS	
4730-815-5424	BULK		4730-889-2466	BULK	
4730-816-7046	BULK		4730-889-2468	BULK	
4730-816-8060	178	50	4730-889-2468	KITS	
4730-818-0505	115	59	4730-889-2473	BULK	
4730-818-7333	139	30	4730-889-2474	BULK	
4730-818-9799	178	77	4730-889-2474	KITS	
4730-818-9946	117	89	4730-889-2477	BULK	
4730-818-9946	129	124	4730-889-2478	BULK	
4730-818-9946	KITS		4730-891-2960	218	
4730-818-9947	117	36	4730-891-5263	A3	1
4730-818-9947	119	253	4730-891-5263	QC1	80
4730-818-9948	A3	1	4730-891-5263	117	35
4730-819-9162	269	4	4730-891-5263	119	262
4730-821-0189	112	143	4730-894-6550	62	61
4730-821-0189	112	153	4730-894-6550	QC1	73
4730-821-0189	112	161	4730-894-6550	217	
4730-821-0189	112	82	4730-894-6550	217A	21
4730-821-0189	119	62	4730-894-6550	217B	22
4730-821-0189	178	7	4730-894-6552	62	41
4730-821-0189	KITS		4730-894-6552	QC1	12
4730-821-0189	217B	30	4730-898-1711	62	
4730-825-9396	129	7A	4730-898-1711	213	3
4730-825-9396	KITS		4730-898-1711	220	3
4730-826-3421	129		4730-898-1711	221	34
4730-826-3421	129	67A	4730-898-1711	221	67
4730-826-7567	213		4730-901-1062	117	2A
4730-826-7567	220		4730-901-6225	97	2
4730-826-7567	221	98	4730-901-6226	97	1
4730-827-1301	129	9	4730-903-4451	115	59
4730-828-9981	213	13	4730-903-4451	269	4
4730-828-9981	219	76	4730-903-4530	117	10A

STOCK NUMBER	FIGURE NUMBER	ITEM NUMBER
4730-903-4530	119	
4730-903-8613	211	26A
4730-903-8613	213	15
4730-903-8613	218	61A
4730-903-8613	218	70
4730-903-8613	219	27
4730-903-8613	219	74
4730-903-8613	219	78
4730-903-8613	220	12
4730-903-8613	220	18
4730-903-8613	221	28
4730-903-8613	221	45
4730-903-8613	KITS	
4730-903-8613	219A	104
4730-903-8613	219A	196
4730-903-8614	219	28
4730-904-8171	63	18
4730-907-7641	213	
4730-907-7641	220	
4730-907-8386	139	37
4730-907-8386	139	85
4730-908-2035	119	159
4730-918-0418	A55	
4730-919-6785	BULK	
4730-922-2687	BULK	
4730-922-8223	117	66
4730-922-8223	129	7B
4730-922-8223	129	9A
4730-922-8223	129	90B
4730-922-9476	143	7
4730-924-7698	129	65A
4730-924-7698	129	66A
4730-925-4752	QC1	49
4730-925-4752	QC1	58
4730-925-4752	178	98
4730-925-4752	BULK	
4730-925-7848	251	8
4730-925-7849	251	50
4730-929-5705	BULK	
4730-930-2260	80	22
4730-930-2262	BULK	
4730-933-0747	BULK	
4730-933-0747	KITS	
4730-936-2180	BULK	
4730-936-2180	KITS	
4730-936-2361	BULK	
4730-936-2361	KITS	
4730-936-2362	BULK	
4730-936-2363	BULK	
4730-936-2363	KITS	
4730-936-2364	BULK	
4730-936-2364	KITS	
4730-936-2365	BULK	
4730-936-2365	KITS	
4730-936-2367	BULK	
4730-936-2367	KITS	
4730-941-3760	BULK	
4730-945-1774	129	7E
4730-948-9314	BULK	
4730-948-9314	KITS	
4730-948-9623	BULK	
4730-948-9623	KITS	
4730-949-1656	BULK	
4730-949-1656	KITS	
4730-950-6843	129	63A
4730-957-6670	117	73E
4730-957-6670	129	71A
4730-957-6670	221	59
4730-958-3704	119	
4730-958-3704	119	10
4730-958-3704	119	8
4730-958-3704	119	85
4730-958-3704	129	32
4730-958-3704	178	33
4730-958-3704	179	
4730-958-3704	179	18A
4730-958-3704	179	3A
4730-967-1820	270	17
4730-967-9514	BULK	
4730-967-9522	BULK	
4730-967-9528	BULK	
4730-969-5185	129	66A
4730-969-6665	BULK	
4730-969-6666	BULK	
4730-969-6667	BULK	
4730-969-6668	BULK	
4730-969-6670	BULK	
4730-969-6671	BULK	
4730-969-6672	BULK	
4730-969-9208	258A	10
4730-974-1552	211	30
4730-974-1552	211	34
4730-974-1553	211	29
4730-974-1553	211	31
4730-976-9317	117	35
4730-978-7001	BULK	
4730-982-9736	BULK	
4730-982-9736	KITS	
4730-989-3167	BULK	
4730-989-3168	221	115
4730-989-3168	BULK	
4730-989-3169	BULK	
4730-989-9946	42	
4730-989-9946	42	6A
4730-990-2585	139	99
4730-990-2585	178	32
4730-990-5704	BULK	
4730-990-8150	62	60B
4730-990-8150	QC1	67
4730-990-8150	217	16
4730-990-8150	217A	3
4730-990-8150	217B	7
4730-992-7131	83	38
4730-993-6253	129	5A
4730-993-6253	129	77
4730-995-6929	129	23D
4730-995-7986	251	23
4730-995-8828	178	91
4810-021-6755	105	
4810-021-6755	228	142
4810-056-2304	109	77
4810-716-1879	257	19
4810-716-1879	262	43
4810-716-1879	262C	
4810-716-8617	109	76
4810-716-8617	119	20
4810-739-2604	119	317
4810-890-6302	216	76
4810-898-1751	213	40
4810-898-1751	220	40
4810-898-1751	221	4
4810-906-1330	105	2
4810-906-1332	105	
4810-906-1332	KITS	
4810-906-1333	105	
4810-906-1333	KITS	
4810-906-1334	105	17
4810-906-3920	105	5
4810-906-3922	105	28
4810-907-4724	105	13
4810-914-2045	119	317

STOCK NUMBER	FIGURE NUMBER	ITEM NUMBER
4810-914-2045	123	
4810-914-2363	109	76
4810-914-2363	119	20
4810-914-2363	153	
4810-914-2364	109	76
4810-914-2364	119	20
4810-914-2364	123	
4810-950-1723	109	77
4810-950-1723	123	
4810-950-7035	119	317
4810-950-7035	153	
4810-963-1142	79	22
4820-009-3486	69	3A
4820-009-3486	70	18
4820-014-2021	129	17
4820-014-2021	144	
4820-014-2023	QC1	103
4820-014-2023	QC1	113
4820-014-2023	119	122
4820-014-2023	129	
4820-014-2023	129	95G
4820-014-2023	143	25
4820-021-3630	147	4
4820-044-2078	218	51
4820-044-2078	219	46
4820-044-2078	219	93
4820-054-2386	74	79
4820-054-4873	221	107
4820-054-4873	221	130
4820-054-4873	221	88
4820-056-2300	82	2A
4820-061-5022	117	72
4820-061-5022	129	114
4820-076-2708	82	9
4820-100-4337	219A	123
4820-100-4337	219A	18
4820-100-4339	218	3
4820-100-4339	219A	108
4820-100-4339	219A	3
4820-104-6801	218	74
4820-108-6325	218	3
4820-108-6325	219A	108
4820-108-6325	219A	3
4820-121-1964	119	258
4820-121-1964	129	5
4820-121-1964	129	7A
4820-121-1964	129	77
4820-121-1964	129	9
4820-121-1964	139	33
4820-121-1964	139	81
4820-124-5815	216	18
4820-134-4498	67	14
4820-177-0670	139	112
4820-181-8592	109	
4820-181-8592	139	23
4820-181-8592	139	72
4820-181-8604	109	
4820-181-8604	139	25
4820-181-8604	139	76
4820-181-8979	139	112
4820-181-8979	150	
4820-181-8994	139	112
4820-181-8994	150A	
4820-194-4878	150A	4
4820-194-4880	150	15
4820-194-4884	150A	23
4820-194-4885	150A	20
4820-196-2886	150	9
4820-196-2890	150A	21
4820-196-2892	150	1
4820-238-5404	218	74
4820-238-5404	220	7
4820-238-5404	221	30
4820-238-5404	221	70
4820-370-4106	76	27
4820-370-4106	81	46
4820-370-4106	83	112
4820-402-5133	129	30
4820-402-5133	129	64
4820-402-9675	150	12
4820-402-9676	150	17
4820-402-9677	150	14
4820-403-1129	150A	9
4820-408-5141	150	21
4820-477-6275	34	65
4820-492-4242	258A	13
4820-494-9613	76	109B
4820-494-9613	81	33B
4820-494-9613	83	110B
4820-522-2415	74	79
4820-535-6483	51	80
4820-535-6483	53	41
4820-535-6483	54	3
4820-535-6483	59	22
4820-535-6483	117	84
4820-535-6483	119	402
4820-535-6483	129	92
4820-535-6483	270	23C
4820-535-6483	KITS	
4820-684-4271	218	63
4820-716-8618	112	34
4820-739-2600	119	354
4820-739-2600	151	
4820-781-7459	109	
4820-781-7459	109	30
4820-781-7459	110	100
4820-781-7459	110	72
4820-781-7459	119	109
4820-781-7459	119	289
4820-781-7459	119	368
4820-781-7459	119	373
4820-781-7459	119	59
4820-781-7459	119	7
4820-781-7459	139	10
4820-781-7459	139	37
4820-781-7459	139	65
4820-781-7459	139	85
4820-788-0417	262	51
4820-788-0417	262D	
4820-825-1534	102	
4820-825-1534	103	
4820-876-2424	18	
4820-876-2424	213	53
4820-876-2424	213	53A
4820-876-2424	220	52
4820-879-5492	112	24
4820-879-5492	129	95F
4820-886-3401	216	
4820-886-3401	KITS	
4820-887-1523	211	48
4820-913-4289	112	34
4820-913-4289	153	
4820-923-4431	129	44
4820-923-4432	QC1	134
4820-923-4432	QC1	98
4820-923-4432	143	14
4820-944-2578	112	34
4820-944-2578	123	
4820-960-3984	129	11
4820-960-3984	136	
4920-003-8527	A6	
4920-010-7445	A10	5

STOCK NUMBER	FIGURE NUMBER	ITEM NUMBER	STOCK NUMBER	FIGURE NUMBER	ITEM NUMBER
4920-027-3041	F13	6	4920-613-7389	A43	
4920-037-8100	A45	7	4920-628-2575	A24	6
4920-066-3202	A36	4	4920-659-2328	A3	2
4920-070-6746	F11	5	4920-674-0174	A29	8
4920-073-0352	F11	1	4920-701-6129	F23	
4920-086-6900	F12	5	4920-738-6813	A26	7
4920-087-7638	A8	8	4920-757-2870	A24	3
4920-106-2351	A42	6	4920-757-7149	A26	4
4920-107-4737	A43	4	4920-790-2960	A22	3
4920-107-4738	A43	2	4920-799-0481	A7	2
4920-107-4741	F25	4	4920-799-0484	A7	3
4920-111-2984	A45	3	4920-799-0485	A3	6
4920-127-3154	A51	2	4920-801-6939	F21	3
4920-127-3155	A43	1	4920-808-5737	A14	5
4920-134-4534	A30	5	4920-821-2767	F11	7
4920-135-4629	A14	7	4920-832-2564	A54	7
4920-136-1273	A20	2	4920-832-2663	A54	
4920-136-2348	A51	3	4920-832-2669	A54	2
4920-136-2349	A17	1	4920-836-8499	A44	8
4920-156-9946	A6		4920-837-9420	F21	4
4920-157-1427	A46	6	4920-842-5899	A3	3
4920-176-4067	F22		4920-842-6339	A8	9
4920-176-4073	F22		4920-842-6340	A9	6
4920-176-4260	A46	4	4920-854-4507	A15	1
4920-176-8480	F10	5	4920-863-5764	A14	2
4920-228-1847	A44	4	4920-863-5768	A18	3
4920-228-1857	A4	2	4920-863-5769	F23	7
4920-229-6688	A50	1	4920-863-5773	A9	1
4920-229-6689	F23	6	4920-863-5779	A22	2
4920-229-6690	A43	6	4920-865-8115	A46	7
4920-245-1831	F25	1	4920-865-8121	A46	8
4920-245-1832	F24	3	4920-866-6954	A46	9
4920-250-4659	F22	3	4920-867-1160	F13	3
4920-369-9545	A50	6	4920-870-3885	A25	6
4920-369-9557	A5	1	4920-872-1109	F15	55
4920-369-9581	A7	7	4920-872-6129	A24	5
4920-410-4627	A18	1	4920-872-7884	A38	3
4920-410-4628	A23	1	4920-874-2538	A40	7
4920-420-5202	A2	2	4920-874-2539	A41	2
4920-420-5203	A38	5	4920-874-2540	A32	2
4920-420-5204	A5	4	4920-874-2547	A31	8
4920-420-5205	A51	1	4920-874-2550	A31	7
4920-420-5206	A43	5	4920-874-2552	A30	9
4920-421-1794	A4	3	4920-874-2553	A30	7
4920-435-7839	A28	4	4920-874-2559	A31	9
4920-437-7557	F22	1	4920-875-1450	A25	4
4920-437-7558	F22	2	4920-876-0113	A25	6
4920-438-7730	A44		4920-876-0114	A25	5
4920-439-8488	F10		4920-876-0116	A26	6
4920-443-1116	A9	7	4920-876-5594	A54	1
4920-443-1119	A28	1	4920-879-3037	A7	4
4920-443-1120	A4	6	4920-879-3045	A11	9
4920-443-1122	A27	6	4920-879-3046	A5	7
4920-443-1145	A6	3	4920-879-3050	A48	8
4920-456-6010	A1	5	4920-890-5181	A7	1
4920-456-6011	A9	9	4920-890-5182	A7	1
4920-456-6013	A8	10	4920-890-5183	A7	1
4920-456-6020	A1	4	4920-903-4598	F11	2
4920-457-9829	A2	9	4920-903-4605	F12	3
4920-463-4788	F11	9	4920-903-4606	A53	2
4920-463-4790	A27	3	4920-904-2447	A12	3
4920-476-0238	A11	7	4920-904-2452	A18	7
4920-484-3957	A5	6	4920-904-2453	A51	4
4920-484-3958	F22	5	4920-904-2455	A18	6
4920-503-6088	A10		4920-904-4248	A4	1
4920-510-3093	A45		4920-909-7262	A29	8
4920-522-3784	A28	7	4920-910-2682	A48	5
4920-522-3786	A38	2	4920-911-9196	A21	5
4920-547-8998	A54		4920-916-6163	A19	5
4920-572-7673	A40	4	4920-916-6165	A55	3
4920-590-8663	F23		4920-916-6167	A36	7

STOCK NUMBER	FIGURE NUMBER	ITEM NUMBER	STOCK NUMBER	FIGURE NUMBER	ITEM NUMBER
4920-916-6169	F23		4920-946-6941	A27	5
4920-917-1873	A16	4	4920-946-6987	A28	5
4920-917-1880	F10	6	4920-946-7003	A29	2
4920-917-1890	A49	7	4920-947-3499	A4	9
4920-917-1965	A25	3	4920-947-3508	A3	8
4920-917-1970	A30	3	4920-947-3510	A11	9
4920-917-2147	A10	5	4920-947-4504	A5	10
4920-917-7089	F23	1	4920-954-5923	A36	
4920-917-7092	A37	3	4920-954-5944	A36	6
4920-917-7094	A47	4	4920-962-8818	A46	1
4920-917-7095	A48	6	4920-963-1997	A47	1
4920-917-7096	A12	3	4920-963-6865	A29	1
4920-917-7097	A12	3	4920-964-1300	F22	4
4920-917-7099	F10		4920-964-1301	A46	5
4920-917-7102	A22		4920-964-1325	A1	2
4920-917-7103	A22		4920-971-8360	A55	
4920-917-7105	A47	6	4920-981-9156	A31	9
4920-917-7106	A32	1	4920-984-5342	A20	6
4920-917-7107	A22	6	4920-984-5344	A27	2
4920-917-7109	A37	7	4920-993-5116	A31	5
4920-918-1913	A16	2	4920-995-2515	A55	
4920-921-5581	A43	6	4920-995-2516	A55	
4920-922-5842	A7	1	4920-995-2517	A31	4
4920-923-0573	A19	1	4920-995-2519	A55	
4920-923-1975	A48	4	4920-995-2520	A55	
4920-923-1980	A15	3	4920-995-2537	A55	
4920-923-1984	A13	3	4920-995-2540	A55	
4920-923-1996	A49	1	4920-995-2544	A30	8
4920-923-2149	A49	3	4920-997-4714	A31	5
4920-923-2191	A5	3	4920-997-6284	A24	
4920-923-2391	A35	3	4920-997-6285	A22	4
4920-923-4395	A40	2	4920-997-6286	A3	9
4920-924-7723	A49	2	4920-997-6288	A27	9
4920-924-7725	A21	4	4920-997-8823	A17	3
4920-924-7726	A8	4	4925-973-3759	F24	
4920-924-7727	A48	8	4930-055-5016	76	74
4920-924-7729	A37	7	4930-064-4535	A6	8
4920-924-7730	F12	6	4930-065-0578	A6	8
4920-924-7731	A21	4	4935-757-5867	A31	7
4920-925-4821	F13	2	4935-760-1362	A8	3
4920-927-1256	A30	4	4935-964-9435	247	26
4920-928-6234	A26	3	5110-869-3701	A55	
4920-928-6235	A23	3	5110-918-3027	268	138
4920-929-1016	F10	5	5120-052-4789	A55	
4920-929-3671	A20	8	5120-053-3344	A53	1
4920-929-3672	A20	8	5120-062-9947	A35	6
4920-929-3673	F25	3	5120-062-9952	A35	4
4920-929-3674	A49	5	5120-065-0971	A35	5
4920-929-3676	A49	4	5120-072-4451	A55	2
4920-929-3679	A15	7	5120-072-8354	A23	7
4920-929-3680	A15	7	5120-073-3329	A15	4
4920-931-8330	A2	1	5120-073-3330	A16	5
4920-934-8407	A28	8	5120-075-0375	A53	
4920-936-5533	A29	9	5120-097-8425	A50	10
4920-936-5534	A27	10	5120-126-4075	A47	3
4920-936-5536	A25	7	5120-135-6724	A45	5
4920-936-5537	A11	5	5120-135-6725	A50	3
4920-936-5538	A38	6	5120-135-6726	A45	6
4920-936-5539	A39	6	5120-135-6727	A49	6
4920-939-8172	A42	1	5120-136-2336	A50	4
4920-943-0740	A41	6	5120-168-2237	A12	7
4920-943-0742	A43	4	5120-177-9523	A1	
4920-944-2537	F13	4	5120-177-9524	A1	1
4920-944-2539	A39	4	5120-177-9525	A28	
4920-944-2540	A39	3	5120-178-0963	A7	6
4920-944-2561	A14	6	5120-179-3558	A23	2
4920-944-2562	A20	3	5120-203-4794	F1	27
4920-944-2584	A16	7	5120-203-4795	F1	25
4920-944-2606	A54	4	5120-203-4796	F1	15
4920-946-6939	A53	6	5120-203-4797	F1	24
4920-946-6940	A27	7	5120-203-4798	F1	23

STOCK NUMBER	FIGURE NUMBER	ITEM NUMBER	STOCK NUMBER	FIGURE NUMBER	ITEM NUMBER
5120-203-4800	F1	22	5120-864-0522	A14	3
5120-203-4802	F1	21	5120-864-0523	A14	4
5120-203-4804	F1	20	5120-864-0524	A15	2
5120-203-4806	F1	19	5120-864-0528	A17	6
5120-203-4808	F1	18	5120-864-0530	A18	2
5120-203-4812	F1	17	5120-864-0535	A20	5
5120-203-4814	F1	16	5120-864-0536	A23	6
5120-215-4325	A17	5	5120-866-6102	A10	
5120-224-3160	BULK		5120-867-5501	A12	2
5120-227-8074	F1	36	5120-869-3655	A44	1
5120-236-7590	F1	37	5120-871-8771	A30	2
5120-239-6165	A44	7	5120-874-2587	A53	3
5120-247-0216	A45	4	5120-879-2339	F1	10
5120-248-1265	A15	7	5120-879-3710	A27	4
5120-248-1266	A44	6	5120-886-1508	A13	1
5120-248-5006	A16	1	5120-886-1510	A13	6
5120-253-1563	A22		5120-886-1517	A17	5
5120-253-1564	A6	4	5120-886-1518	A18	4
5120-288-6552	F1	4	5120-886-1519	A9	3
5120-288-8698	F1	13	5120-886-1520	A9	4
5120-288-8699	F1	14	5120-886-1521	A9	5
5120-288-8701	F1	12	5120-886-1523	A10	4
5120-288-8703	F1	9	5120-886-1524	A11	3
5120-288-8704	F1	8	5120-886-1526	A11	6
5120-288-8706	F1	7	5120-886-1528	A12	4
5120-288-8708	F1	6	5120-888-8000	A10	
5120-288-8711	F1	5	5120-891-1367	A8	6
5120-288-8713	F1	11	5120-891-1368	A42	5
5120-288-8714	F1	3	5120-891-1369	A9	8
5120-293-1010	F1	34	5120-891-1370	A11	4
5120-293-1796	F1	31	5120-898-7967	A55	
5120-293-2562	F1	35	5120-900-8472	A12	1
5120-329-6566	A33	7	5120-904-2476	A42	2
5120-443-1070	A9	10	5120-905-5477	A10	
5120-443-1071	A1	6	5120-907-0876	F1	1
5120-443-1072	A5	2	5120-908-9139	A17	2
5120-446-2858	A32	6	5120-910-3169	A36	3
5120-453-9449	A4	5	5120-916-5612	A47	5
5120-453-9503	A8	7	5120-916-5613	A34	4
5120-462-3143	A20	4	5120-917-1020	A10	6
5120-464-1813	A30	1	5120-917-1246	A35	1
5120-484-3894	A6	1	5120-917-1764	A22	
5120-484-3895	A8	5	5120-923-2450	A20	1
5120-570-3141	A14	8	5120-923-2452	A37	5
5120-606-5973	A16	6	5120-923-2486	A5	5
5120-733-2507	A12	5	5120-923-2490	A10	7
5120-745-7763	A2	8	5120-927-9502	A19	
5120-755-6697	A22	5	5120-927-9504	A24	4
5120-758-6670	A47	2	5120-927-9505	A18	5
5120-772-7140	A53	4	5120-929-3678	A19	3
5120-772-7149	A8	1	5120-931-2788	189A	
5120-772-7156	A8	2	5120-935-4618	F1	32
5120-772-7157	A23	5	5120-935-4619	F1	33
5120-772-7158	A42	4	5120-935-4620	F1	26
5120-775-1849	A32		5120-940-0991	A41	2
5120-781-8422	A54		5120-940-0992	A28	3
5120-788-4822	A39	7	5120-940-0993	A29	3
5120-831-5405	A2		5120-940-0994	A8	3
5120-832-2667	A25	2	5120-940-0995	A46	3
5120-832-2668	A26	1	5120-944-2525	A39	2
5120-839-0719	A24	1	5120-944-2526	A11	1
5120-839-0720	A41	5	5120-944-2527	A45	2
5120-842-6348	A54	3	5120-947-3155	F1	29
5120-847-7528	A35	2	5120-947-3163	F1	30
5120-847-7533	A39	5	5120-947-3189	F1	28
5120-864-0509	A9	5	5120-947-3513	A4	8
5120-864-0510	A10	1	5120-947-3529	A3	7
5120-864-0511	A10	2	5120-947-9966	A2	
5120-864-0515	A11	2	5120-955-9649	A21	3
5120-864-0520	A13	5	5120-957-7550	A55	1
5120-864-0521	A14	1	5120-958-5418	A29	4

STOCK NUMBER	FIGURE NUMBER	ITEM NUMBER
5120-959-5458	A38	1
5120-959-5512	A50	2
5120-959-5520	A29	5
5120-959-8191	A36	8
5120-959-8238	A48	7
5120-959-8289	A36	1
5120-959-8666	A36	3
5120-959-8759	A36	5
5120-960-0156	A37	1
5120-960-0166	A53	7
5120-960-4058	A10	3
5120-960-4070	A19	4
5120-962-8119	A5	8
5120-962-9627	A5	8
5120-962-9629	A5	9
5120-962-9671	A27	8
5120-963-1998	A37	2
5120-963-9437	A37	4
5120-963-9508	A35	5
5120-966-2177	A42	7
5120-967-8151	BULK	
5120-977-1723	A50	5
5120-979-7582	A9	2
5120-993-5117	A54	3
5130-784-7626	263	25
5133-293-1903	A55	
5140-331-5496	F1	2
5180-103-0001	A51	5
5180-168-2294	A34	5
5180-411-8433	A23	4
5180-761-2214	A34	5
5210-086-3469	A29	6
5210-226-5896	A30	6
5220-131-5393	A33	1
5220-228-8822	A39	1
5220-229-2905	A12	3
5220-229-2906	A12	3
5220-587-3408	A33	1
5220-758-8542	A29	7
5220-762-6853	A12	3
5220-874-7760	A31	1
5220-909-2080	A31	9
5220-986-1135	A27	1
5220-986-1136	A4	4
5220-986-1146	A12	3
5305-004-1017	60	32
5305-004-1017	60	6
5305-004-1018	61	11
5305-004-1018	61	34
5305-010-5137	11A	41
5305-010-5137	11A	72A
5305-010-5137	271	9
5305-018-6506	73	44E
5305-020-8880	193	45
5305-020-8880	193	87
5305-021-9113	265	201
5305-021-9113	268	226
5305-025-8016	160	37
5305-025-8016	160	43
5305-025-8017	160	30
5305-033-6174	170	30
5305-033-6174	171	32
5305-038-2072	165	10
5305-038-2072	165	26
5305-043-1275	BULK	
5305-043-2502	265	77
5305-043-2502	268	35
5305-044-2255	BULK	
5305-044-5891	207	
5305-045-3179	BULK	
5305-045-3180	69	15
5305-045-4508	18	112
5305-045-4508	18	62
5305-051-4505	184	
5305-051-5822	170	72
5305-051-6521	BULK	
5305-051-6882	18	
5305-051-7341	BULK	
5305-052-6763	BULK	
5305-052-8251	BULK	
5305-052-9501	BULK	
5305-052-9503	64A	16
5305-052-9954	BULK	
5305-052-9955	BULK	
5305-053-1118	37	11
5305-053-1118	37	22
5305-053-1332	270	24
5305-053-1716	74	41
5305-053-5171	194	194
5305-053-5171	194	221
5305-053-9365	BULK	
5305-054-5638	176	7
5305-054-5638	177	6
5305-054-5647	BULK	
5305-054-5648	248	5
5305-054-5648	248	78
5305-054-5649	176	26
5305-054-5649	177	26
5305-054-5649	248	6
5305-054-5649	248	90
5305-054-5650	BULK	
5305-054-6652	BULK	
5305-054-6654	183	5
5305-054-6654	197	37
5305-054-6657	BULK	
5305-054-6658	228	147
5305-054-6670	275	
5305-054-6670	BULK	
5305-054-6681	268	
5305-055-2797	BULK	
5305-055-6294	45	31D
5305-056-9961	68	32
5305-057-0487	BULK	
5305-057-0522	KITS	
5305-057-7182	112	
5305-057-9612	42	
5305-058-2067	141	5
5305-058-2067	141	8
5305-058-4005	BULK	
5305-058-4007	BULK	
5305-058-4008	10	
5305-058-4008	11A	39
5305-058-4008	11A	55
5305-058-4008	11A	70
5305-058-4009	11A	40
5305-058-4009	11A	55A
5305-058-4009	11A	71
5305-058-4011	10	43
5305-058-4011	11	138
5305-058-4011	11A	24
5305-058-4011	11A	42
5305-058-4011	11A	68
5305-058-4011	11B	51
5305-058-4011	11B	56A
5305-058-4011	271	2
5305-058-4011	271	5
5305-058-4011	271	7
5305-058-4011	KITS	
5305-058-4012	11	138A
5305-058-4012	11A	25
5305-058-4012	11A	42A
5305-058-4012	11A	53

STOCK NUMBER	FIGURE NUMBER	ITEM NUMBER
5305-058-4012	11A	67
5305-058-4012	11B	52
5305-058-4012	271	3
5305-058-4012	271	4
5305-058-4012	271	6
5305-058-4012	271	8
5305-058-4013	BULK	
5305-058-4017	21	88
5305-058-4019	21	88
5305-058-4019	11A	38
5305-058-4019	11A	72
5305-058-4019	KITS	
5305-058-4021	BULK	
5305-058-4024	21	81
5305-058-5048	20	
5305-058-5049	11A	54
5305-058-5049	11A	69
5305-058-7609	21	81
5305-059-2490	BULK	
5305-059-3657	BULK	
5305-059-3657	KITS	
5305-059-3658	13	93
5305-059-3658	KITS	
5305-059-3660	188	65A
5305-059-3660	KITS	
5305-059-3661	BULK	
5305-059-3661	KITS	
5305-059-3662	BULK	
5305-059-3662	KITS	
5305-059-3663	BULK	
5305-059-3667	BULK	
5305-059-3676	BULK	
5305-059-4544	BULK	
5305-059-4553	192	3
5305-059-4553	192	95
5305-059-4553	205	22
5305-059-4573	230	27
5305-059-4573	231	67
5305-059-4871	128	2
5305-059-8243	BULK	
5305-059-8251	157	26
5305-059-8251	158	59
5305-059-8251	KITS	
5305-059-8388	188	60
5305-059-8685	BULK	
5305-063-3503	BULK	
5305-063-3507	10	
5305-066-7322	32	
5305-067-3863	18	
5305-067-9914	BULK	
5305-067-9917	148	12
5305-067-9917	228	139
5305-068-0055	KITS	
5305-068-0522	BULK	
5305-068-0523	KITS	
5305-068-0543	BULK	
5305-068-6605	KITS	
5305-068-7064	265	281
5305-068-7064	268	245
5305-068-9227	183A	57
5305-070-0475	210	54
5305-071-1322	BULK	
5305-072-4115	169	10
5305-072-4115	169	15
5305-075-2516	232	34
5305-076-2039	205	16
5305-081-6668	192	64
5305-081-6668	192	86
5305-081-6668	193	6
5305-081-6668	203	21
5305-081-6668	203	28
5305-081-6668	203	7
5305-081-6668	228	94
5305-081-6668	231	121
5305-081-6668	231	122A
5305-081-6668	182A	2
5305-081-6668	182A	7
5305-082-1892	52	16
5305-082-1892	105	16
5305-082-1894	52	7
5305-082-1894	105	9
5305-082-6652	30	30
5305-082-6652	160	63
5305-082-6780	18	
5305-082-6780	32	
5305-088-9473	KITS	
5305-088-9665	BULK	
5305-088-9671	KITS	
5305-089-5072	169	4
5305-089-5073	169	7
5305-089-5074	169	11
5305-090-0574	165	68
5305-090-0574	165	71
5305-104-5065	266	2
5305-110-8800	267	21
5305-115-1255	75	110
5305-116-1537	67A	43
5305-127-0198	BULK	
5305-127-0203	67	53
5305-132-9997	67	25
5305-135-5056	156	14
5305-144-3828	95	6
5305-144-3828	110	67
5305-144-3828	110	99
5305-144-3828	115	
5305-144-3828	117	
5305-144-3828	119	
5305-144-3828	129	
5305-144-3828	179	43
5305-144-3828	196	37
5305-144-3828	204	24
5305-144-3828	221	24
5305-144-3828	258	11B
5305-144-3921	157	46
5305-144-3921	158	41
5305-144-3921	205	15
5305-144-3929	210	77
5305-144-4066	160	86
5305-145-6931	BULK	
5305-145-6971	83	35D
5305-145-6971	94	3
5305-145-6971	120	13
5305-145-6971	120	3
5305-145-6971	215	21
5305-145-6971	215	51
5305-145-6971	216	33A
5305-145-6971	216	36
5305-145-6971	265	133
5305-145-6971	268	88
5305-145-7011	26	28
5305-145-7011	252	13
5305-145-7011	275	
5305-145-7012	230	28
5305-145-7012	231	66
5305-145-7013	252	8
5305-150-3187	18	
5305-150-9205	76	169A
5305-150-9208	BULK	
5305-150-9209	261	23
5305-150-9210	71	51A
5305-150-9210	QC1	

STOCK NUMBER	FIGURE NUMBER	ITEM NUMBER	STOCK NUMBER	FIGURE NUMBER	ITEM NUMBER
5305-150-9211	BULK		5305-180-0004	42	2A
5305-150-9212	66	33	5305-180-0005	BULK	
5305-150-9212	66	36	5305-180-0009	F16	2
5305-150-9212	94	12	5305-180-0009	178	70
5305-150-9212	QC1	160	5305-180-0009	257	10B
5305-150-9212	QC1	44	5305-180-0009	BULK	
5305-150-9212	111	2	5305-180-0009	KITS	
5305-150-9212	132	21	5305-180-0010	10	
5305-150-9212	132	30	5305-180-0010	13	14
5305-150-9212	151	1	5305-180-0010	13	36
5305-150-9212	259	15B	5305-180-0010	15	39
5305-150-9212	261	17	5305-180-0010	16	24
5305-150-9212	261	35	5305-180-0010	18	
5305-150-9212	262	45	5305-180-0010	28	36
5305-150-9212	262	6	5305-180-0010	31	
5305-150-9212	265	99	5305-180-0010	32	
5305-150-9212	268	118	5305-180-0010	32	
5305-150-9212	KITS		5305-180-0010	32	
5305-150-9213	59	23	5305-180-0010	34	
5305-150-9213	59	3	5305-180-0010	34	
5305-150-9213	66	33	5305-180-0010	36	
5305-150-9213	66	36	5305-180-0010	QC1	
5305-150-9213	QC1		5305-180-0010	129	23H
5305-150-9213	QC1	159	5305-180-0010	251	11
5305-150-9213	259	11	5305-180-0010	251	3
5305-150-9213	265	128	5305-180-0010	251	34
5305-150-9213	268	105	5305-180-0010	251	47
5305-150-9213	KITS		5305-180-0010	253	1
5305-150-9219	BULK		5305-180-0010	255	18
5305-150-9265	26	2	5305-180-0010	255	10B
5305-150-9516	BULK		5305-180-0010	255	11B
5305-151-0053	76	156A	5305-180-0010	255	18
5305-151-0376	265	21	5305-180-0010	256	22B
5305-151-0376	268	157	5305-180-0010	259	15C
5305-151-0376	268	55	5305-180-0010	259	6A
5305-151-0581	277		5305-180-0010	281	
5305-151-1363	205	42	5305-180-0010	KITS	
5305-151-1492	BULK		5305-180-0011	KITS	
5305-151-2721	BULK		5305-180-0012	10	
5305-151-5688	228	129E	5305-180-0012	10	
5305-151-5753	68	85	5305-180-0012	10	
5305-151-6136	36A	23	5305-180-0012	10	
5305-151-6136	36B	26	5305-180-0012	10	
5305-151-6136	37B	40	5305-180-0012	15	48
5305-151-6168	67A	69	5305-180-0012	16	
5305-151-6169	67A	33	5305-180-0012	16	13
5305-151-6206	68	23	5305-180-0012	17	13
5305-151-6945	37B	30	5305-180-0012	18	146
5305-152-0541	68	58	5305-180-0012	24	22
5305-156-2817	230	26	5305-180-0012	32	
5305-156-2817	231	68	5305-180-0012	33	16
5305-156-2851	225	22	5305-180-0012	33	23
5305-156-2869	225	19	5305-180-0012	33	26
5305-156-2902	157	38	5305-180-0012	75	6
5305-156-2902	158	35	5305-180-0012	118	111
5305-157-8503	68	49	5305-180-0012	188	
5305-158-0819	68	17	5305-180-0012	196	
5305-159-5400	194	220	5305-180-0012	255	
5305-165-6954	BULK		5305-180-0012	255	11A
5305-165-8101	183A	61	5305-180-0012	255	16B
5305-167-3635	10		5305-180-0012	256	19
5305-172-9068	211		5305-180-0012	256	21
5305-172-9068	218		5305-180-0012	263	27A
5305-172-9068	218	73C	5305-180-0012	271	18
5305-172-9068	219		5305-180-0012	271	19
5305-174-0702	231	19	5305-180-0012	KITS	
5305-174-0702	262	17	5305-180-0014	10	
5305-174-0756	BULK		5305-180-0014	20	
5305-174-1154	271	22	5305-180-0014	25	7
5305-177-5475	BULK		5305-180-0014	31	
5305-180-0004	39		5305-180-0014	33	15

STOCK NUMBER	FIGURE NUMBER	ITEM NUMBER
5305-180-0014	11C	70
5305-180-0014	255	
5305-180-0014	264	5C
5305-180-0014	KITS	
5305-180-0036	215	1
5305-180-0285	33	10
5305-180-3322	10	
5305-180-3322	34	
5305-180-3322	270	28
5305-180-3322	270	61E
5305-180-3326	16	10
5305-180-3326	20	9
5305-180-3326	22	
5305-180-3326	32	53
5305-180-3326	257	10C
5305-180-3326	KITS	
5305-182-1365	BULK	
5305-182-1366	263	24B
5305-182-1366	KITS	
5305-182-1367	15	28B
5305-182-1367	15	36
5305-182-1368	268	203
5305-182-9309	221A	1
5305-182-9458	72	100
5305-182-9458	74	11
5305-206-1201	20	8
5305-206-1201	34	
5305-206-1201	178	144
5305-206-1201	256	21
5305-206-1201	257	10A
5305-206-1201	257	22D
5305-206-1288	157	75
5305-206-1288	184	56
5305-206-1288	204	
5305-206-2510	BULK	
5305-206-3716	100	24
5305-206-6599	67	22
5305-206-6599	67	34
5305-206-8077	165	64
5305-206-8701	BULK	
5305-207-0145	122	6
5305-207-0145	234	24
5305-207-0145	234	30
5305-207-0959	64A	68
5305-207-1177	262A	7
5305-207-1208	119	
5305-207-3421	165	38
5305-207-3647	BULK	
5305-207-3903	BULK	
5305-207-3919	BULK	
5305-207-4989	149	72
5305-207-5401	BULK	
5305-207-5545	204A	135
5305-207-6531	68	67
5305-207-7465	BULK	
5305-207-7466	192	
5305-207-7466	192	28
5305-207-7466	192	5
5305-207-7466	192	51
5305-207-7468	BULK	
5305-208-0913	204A	13
5305-217-8094	171	63
5305-221-1325	68	40
5305-225-7105	BULK	
5305-226-7604	71	115
5305-227-0962	157	21
5305-227-0962	157	30
5305-227-0962	157	35
5305-227-0962	157	47
5305-227-0962	157	53
5305-227-0962	157	59
5305-227-0962	158	23
5305-227-0962	158	30
5305-227-0962	158	42
5305-227-0962	158	48
5305-227-0962	158	54
5305-227-0962	KITS	
5305-234-6318	45	31A
5305-250-2141	BULK	
5305-251-6394	183A	28
5305-253-5603	52	22
5305-253-5603	122	2
5305-253-5603	124	2
5305-253-5603	125	50
5305-253-5603	133	1
5305-253-5603	144	6
5305-253-5603	145	2
5305-253-5603	148	1
5305-253-5603	150	22
5305-253-5603	153	24
5305-253-5603	212	27
5305-253-5603	215	17
5305-253-5603	215	19
5305-253-5603	247	27
5305-253-5605	209	
5305-253-5605	277	
5305-253-5605	KITS	
5305-253-5606	63	89
5305-253-5606	65	54
5305-253-5606	65	94
5305-253-5606	102	36
5305-253-5606	103	29
5305-253-5606	138	28
5305-253-5606	138	30
5305-253-5606	138	32
5305-253-5606	149	66
5305-253-5606	149	68
5305-253-5606	154	42
5305-253-5606	154	44
5305-253-5606	184	1
5305-253-5606	265	150
5305-253-5606	265	269
5305-253-5606	266	17
5305-253-5606	266	19
5305-253-5606	267	26
5305-253-5606	267	28
5305-253-5606	267	30
5305-253-5606	268	152
5305-253-5606	268	234
5305-253-5606	274	34
5305-253-5606	274	36
5305-253-5606	274	38
5305-253-5607	57	20
5305-253-5607	58	18
5305-253-5607	94	19
5305-253-5607	230	2
5305-253-5607	231	64
5305-253-5609	113	
5305-253-5612	BULK	
5305-253-5614	BULK	
5305-264-2220	210	99
5305-264-2220	234	3
5305-264-2220	234	38
5305-264-2220	234	50
5305-267-8971	279	
5305-267-9225	21	27C
5305-269-6442	265	161
5305-271-5222	BULK	
5305-271-5230	BULK	
5305-271-7807	18	66
5305-271-7807	KITS	
5305-273-2187	160	13

STOCK NUMBER	FIGURE NUMBER	ITEM NUMBER
5305-273-2187	160	70
5305-273-5342	BULK	
5305-273-5637	138	16
5305-273-6234	BULK	
5305-273-6438	BULK	
5305-273-7268	186	1
5305-273-7268	186	22
5305-273-7458	71	136
5305-273-7460	BULK	
5305-273-7463	67	1
5305-273-7463	67	12
5305-273-7463	272	9
5305-275-1567	67	21
5305-275-1567	67	27
5305-281-8498	232	10
5305-281-8498	67A	46
5305-281-8526	255	12A
5305-281-8526	255	15A
5305-281-8527	10	1A
5305-281-8527	18	
5305-281-8527	31	
5305-281-8527	11C	64B
5305-281-8527	253	4A
5305-281-8527	255	16C
5305-281-8527	KITS	
5305-281-8874	BULK	
5305-282-0135	10	
5305-282-2712	252	11
5305-282-2712	260	10
5305-282-2712	268	158D
5305-282-2712	150A	1
5305-282-3586	76	179H
5305-282-3586	81	130
5305-282-3586	83	375
5305-282-3586	89	129
5305-282-4208	24	12
5305-282-4208	24	14
5305-282-4208	24	16
5305-282-4208	24	20
5305-282-4208	271	20
5305-282-4208	KITS	
5305-282-4211	13	97
5305-282-4211	281	
5305-282-4211	282	2
5305-282-4211	282	21
5305-282-4211	282	6
5305-282-4213	281	
5305-282-4213	281	
5305-282-4916	10	
5305-282-4916	10	
5305-282-4916	15	43
5305-282-4916	18	147
5305-282-8470	223	72
5305-282-8470	KITS	
5305-282-8999	96	23
5305-285-2623	271	21
5305-286-0213	167	11
5305-286-0213	KITS	
5305-286-0214	232	13
5305-286-1766	20	36
5305-286-1766	230	4
5305-286-1766	231	2
5305-286-1770	255	20
5305-286-1772	34	
5305-286-1772	253	41
5305-286-1772	255	2C
5305-286-2312	205	19
5305-286-2312	205	36
5305-292-3181	10	
5305-292-3181	KITS	
5305-292-4547	BULK	
5305-292-5923	BULK	
5305-297-2173	170	18
5305-297-2173	171	20
5305-298-8262	183A	41
5305-298-8262	204A	108
5305-298-8262	204A	165
5305-328-9095	BULK	
5305-335-0377	192	90
5305-369-2083	65	11
5305-369-2084	65	76
5305-369-2084	65	78
5305-369-2158	BULK	
5305-373-7575	216	22
5305-376-3216	215	34
5305-407-8551	160	6
5305-407-8551	160	8
5305-410-2945	189A	11
5305-412-2511	265	41
5305-420-5840	65	16
5305-420-5841	65	28
5305-437-2778	67	39
5305-470-3259	204A	15A
5305-485-9765	64A	5
5305-487-5110	65	13
5305-487-5110	65	4
5305-495-6611	68	79
5305-514-6469	215	5
5305-514-7506	215	46
5305-514-7506	234	13
5305-514-8005	261	28
5305-527-4371	30	12
5305-527-4566	BULK	
5305-531-0298	265	155
5305-531-0298	265	18
5305-531-0298	265	232
5305-531-0298	268	70
5305-531-0432	11	61C
5305-531-0432	BULK	
5305-531-1539	216	6
5305-543-2024	132	2
5305-543-2024	146	2
5305-543-2024	212	24
5305-543-2024	216	27
5305-543-2024	230	15A
5305-543-2024	230	20
5305-543-2024	231	10
5305-543-2024	231	59
5305-543-2024	260	18
5305-543-2024	265	153
5305-543-2024	268	149C
5305-543-2024	268	151
5305-543-2024	67A	17
5305-543-2024	67A	44
5305-543-2024	67A	7
5305-543-2394	83	35H
5305-543-2394	212	2
5305-543-2394	150A	14
5305-543-2665	262	31
5305-543-2732	231	22
5305-543-2752	212	16
5305-543-2753	265	218
5305-543-2753	268	214
5305-543-4517	49	51
5305-543-4517	72	26
5305-543-4517	72	57
5305-543-4517	73	1
5305-543-4517	74	15
5305-543-4517	148	6
5305-543-4517	KITS	
5305-543-5058	231	115

STOCK NUMBER	FIGURE NUMBER	ITEM NUMBER
5305-543-5058	265	174
5305-543-5058	268	134
5305-543-5058	67A	4
5305-543-5058	KITS	
5305-543-5794	71	21A
5305-550-3127	BULK	
5305-550-3180	BULK	
5305-551-6029	11	61C
5305-551-6029	BULK	
5305-551-6451	11	61C
5305-551-6451	BULK	
5305-558-4887	215	48
5305-558-4887	216	33E
5305-558-4887	230	17A
5305-558-4887	231	13
5305-558-4887	231	18
5305-558-4887	252	6
5305-558-4887	268	195B
5305-558-4887	190A	8
5305-558-8934	18	
5305-558-8934	21	10
5305-558-9442	230	75
5305-558-9442	231	117
5305-576-0579	13	65
5305-576-0579	13	92
5305-576-1499	BULK	
5305-576-7809	BULK	
5305-576-7810	BULK	
5305-576-7812	BULK	
5305-579-1704	170	7
5305-579-1704	171	7
5305-579-2138	216	74
5305-579-2138	230	19
5305-579-2138	232	31
5305-579-2138	265	37
5305-579-2138	268	87
5305-579-2138	67A	68
5305-579-3701	160	66
5305-579-3701	160	83
5305-582-5807	260	38
5305-582-5807	260	41
5305-582-5807	260	7
5305-582-5807	67A	45
5305-582-5808	BULK	
5305-584-7350	225	10
5305-584-7552	189A	1
5305-584-8682	216	34
5305-614-0245	212	9
5305-614-0247	215	3
5305-614-0247	261	32
5305-614-0247	261	8
5305-614-0247	262	33
5305-614-0261	192	66
5305-614-0261	214	1
5305-614-0261	232	2
5305-614-0261	67A	3
5305-614-0262	67A	1
5305-614-0266	247	3A
5305-614-0266	247	6
5305-614-0266	265	210
5305-614-0286	67A	20
5305-614-0286	190A	6
5305-614-0288	232	17
5305-616-2579	228	129E
5305-616-8543	231	38
5305-616-8543	233	25
5305-616-8543	265	69
5305-616-8543	268	42
5305-619-1056	100	11
5305-619-1056	KITS	
5305-619-4411	170	43
5305-622-9472	67A	19
5305-622-9473	192	97
5305-622-9477	228	
5305-622-9478	276	2
5305-622-9486	BULK	
5305-637-1122	BULK	
5305-637-1123	188	63
5305-637-1125	157	71
5305-637-1125	167	5
5305-637-1125	188	58
5305-637-1125	KITS	
5305-637-5637	BULK	
5305-637-5872	229	7
5305-637-5872	245	8
5305-637-5872	246	
5305-637-5872	KITS	
5305-638-0502	158	19
5305-638-0502	187	10
5305-638-0502	187	17
5305-638-0502	201	15
5305-638-0502	201	25
5305-638-0502	201	51
5305-638-0502	KITS	
5305-638-0502	183A	23
5305-638-0655	248	114
5305-638-1081	170	63
5305-638-6535	13	11
5305-638-6535	13	92
5305-639-1339	170	3
5305-639-1339	171	3
5305-639-2428	192	97
5305-639-4821	KITS	
5305-655-7337	204A	1
5305-655-7337	204A	127
5305-660-2625	BULK	
5305-680-9092	68	24
5305-680-9092	183A	1
5305-680-9092	183A	66
5305-680-9092	183A	9
5305-680-9092	204A	168
5305-680-9092	204A	20
5305-680-9092	204A	6
5305-682-7753	228	143
5305-687-6724	121	2
5305-687-6724	132	5
5305-687-6724	146	11
5305-687-6724	184	8
5305-687-6724	272	1
5305-687-6724	272	37
5305-687-6724	150A	13
5305-688-1398	149	47
5305-688-2342	109	
5305-688-2342	112	27
5305-688-2342	115	
5305-688-2342	116	
5305-688-2342	119	
5305-688-2342	129	
5305-688-2342	205	6
5305-688-2342	208	34
5305-688-2342	209	
5305-688-2342	KITS	
5305-689-5970	21	
5305-690-9766	BULK	
5305-701-0049	BULK	
5305-702-0609	10	
5305-702-0609	10	
5305-702-0609	13	40E
5305-702-0609	69	16
5305-702-0609	218	4
5305-702-0609	37A	98
5305-702-0609	219A	110

STOCK NUMBER	FIGURE NUMBER	ITEM NUMBER
5305-702-0609	219A	5
5305-702-8406	170	8
5305-702-8406	171	8
5305-705-1640	10	
5305-705-1640	37	23
5305-705-1640	229	2
5305-705-1640	KITS	
5305-705-2030	BULK	
5305-705-2250	BULK	
5305-705-2388	20	76
5305-705-2388	264	3C
5305-705-2481	21	48
5305-705-2801	BULK	
5305-717-5593	BULK	
5305-717-5593	KITS	
5305-717-6949	190	129
5305-717-6949	190	143
5305-717-6950	133	22
5305-717-6950	197	35
5305-718-9739	102	30A
5305-718-9831	182A	11
5305-719-5330	190	75
5305-719-5330	197	29
5305-719-5330	203	1
5305-719-5339	215	54C
5305-719-5346	BULK	
5305-719-5400	14	37
5305-719-5400	14	51
5305-719-5400	219	
5305-719-5400	KITS	
5305-719-5403	10	
5305-719-5403	10	
5305-719-5403	10	
5305-719-5403	17	
5305-719-5403	17	17
5305-719-5403	17	22
5305-719-5403	17	27
5305-719-5403	20	
5305-719-5403	20	77
5305-719-5403	211	40
5305-719-5403	211	46
5305-719-5403	218	39
5305-719-5403	218	44
5305-719-5403	218	49
5305-719-5403	219	
5305-719-5403	219	38
5305-719-5403	219	42
5305-719-5403	219	83
5305-719-5403	KITS	
5305-719-5403	219A	120
5305-719-5403	219A	15
5305-719-5405	17	15
5305-719-5405	17	22
5305-719-5405	279	
5305-720-7763	197	43
5305-720-7862	83	35A
5305-720-8287	157	11
5305-720-8287	158	12
5305-720-8429	57	12
5305-720-9115	144	14
5305-721-7603	BULK	
5305-722-4631	BULK	
5305-724-5819	20	
5305-724-6794	210	103
5305-724-6800	205	39
5305-728-5469	68	51
5305-728-5469	183A	53
5305-730-3012	169	57
5305-754-3169	189A	35
5305-758-9988	134	31
5305-762-7482	190	85
5305-763-3965	184	41
5305-763-6009	29	
5305-763-6011	68	57
5305-763-7827	192	109
5305-764-0068	286	11
5305-764-0070	286	4
5305-764-0071	BULK	
5305-764-0076	284	14
5305-764-0076	285	13
5305-764-0076	287	7
5305-764-0080	284	42
5305-764-0080	285	43
5305-764-0080	286	17
5305-764-0084	287	7
5305-764-0084	BULK	
5305-764-9480	68	12
5305-764-9480	68	39
5305-777-8728	225	8
5305-779-6536	228	139
5305-780-9548	65	58
5305-780-9631	BULK	
5305-781-3800	31	19
5305-781-3800	31	20A
5305-781-3800	KITS	
5305-781-4739	65	83A
5305-781-4778	142	6
5305-781-9057	13	15
5305-781-9057	32	79
5305-787-2173	40	
5305-796-1260	221A	
5305-796-1268	221A	
5305-803-9738	75	109
5305-803-9742	BULK	
5305-805-2478	63	32
5305-807-0525	193	2
5305-807-0525	193	89
5305-808-7832	BULK	
5305-808-7834	183	46
5305-808-7834	185	1
5305-811-4067	11	61C
5305-811-4067	42B	
5305-811-9853	122	4
5305-811-9853	130	15
5305-811-9853	215	41
5305-811-9853	230	15
5305-811-9853	231	25
5305-811-9853	232	23
5305-811-9853	232	8
5305-812-1410	BULK	
5305-812-8767	BULK	
5305-814-6291	204A	157
5305-814-8910	268	137
5305-814-9507	183A	81A
5305-815-1707	183A	69
5305-815-1797	68	37
5305-816-0694	BULK	
5305-819-9667	248	17
5305-820-2541	BULK	
5305-820-4649	31	
5305-820-6352	248	10
5305-820-7039	31	
5305-820-7039	KITS	
5305-821-9746	247	1
5305-824-2025	42B	87
5305-824-2029	32	
5305-824-2029	180	39
5305-824-2029	KITS	
5305-824-7165	BULK	
5305-825-1209	BULK	
5305-825-1209	KITS	
5305-825-3453	76	156A

STOCK NUMBER	FIGURE NUMBER	ITEM NUMBER
5305-828-7658	160	23
5305-828-7659	160	27
5305-828-9490	189A	8
5305-829-1419	BULK	
5305-833-9624	18	42A
5305-833-9624	18	45A
5305-833-9624	KITS	
5305-835-7257	BULK	
5305-836-8476	BULK	
5305-837-3343	190	107
5305-837-3343	190	35
5305-840-5301	193	28A
5305-840-5938	73	15
5305-840-5938	73	17
5305-840-7634	191	7
5305-840-7634	195	
5305-840-7634	195	26
5305-842-0241	193	8
5305-844-0508	160	68
5305-848-9282	BULK	
5305-849-8055	BULK	
5305-850-6853	14	24
5305-852-1707	184	
5305-852-1707	184	24
5305-853-9412	228	
5305-855-0987	268	271
5305-857-2943	191	39
5305-860-2523	228	
5305-874-3531	286	8
5305-874-4221	13	92
5305-877-9524	28	
5305-877-9524	28	
5305-880-7730	40	
5305-885-7202	204A	10
5305-889-2960	248	
5305-889-2964	BULK	
5305-889-2997	QC1	
5305-889-2997	182	
5305-889-2997	183	34
5305-889-2997	188	10
5305-889-2997	189	2
5305-889-2997	190	155
5305-889-2997	190	61
5305-889-2997	190	88
5305-889-2997	190	99
5305-889-2997	191	31
5305-889-2997	192	49
5305-889-2997	193	91
5305-889-2997	195	33C
5305-889-2997	198	
5305-889-2997	202	33
5305-889-2997	203	4
5305-889-2997	204	13
5305-889-2997	204	8
5305-889-2997	210	80
5305-889-2997	210	97
5305-889-2997	226	34
5305-889-2997	228	
5305-889-2997	275	
5305-889-2997	KITS	
5305-889-2998	62	77
5305-889-2998	76	112
5305-889-2998	192	30
5305-889-2998	194	12
5305-889-2998	277	
5305-889-2999	33	34D
5305-889-2999	42	
5305-889-2999	182	
5305-889-2999	185	8
5305-889-2999	188	
5305-889-2999	190	127
5305-889-2999	194	60
5305-889-2999	196	
5305-889-2999	196	21A
5305-889-2999	204	
5305-889-2999	204	
5305-889-2999	KITS	
5305-889-3000	157	89
5305-889-3000	158	75
5305-889-3000	188	
5305-889-3000	193	44A
5305-889-3000	194	41
5305-889-3000	196	26
5305-889-3000	196	34
5305-889-3000	196	51
5305-889-3000	196	55
5305-889-3000	202	25
5305-889-3000	204	
5305-889-3000	205	4
5305-889-3000	207	
5305-889-3000	276	
5305-889-3000	277	
5305-889-3000	278	
5305-889-3000	KITS	
5305-889-3000	182A	30
5305-889-3000	182A	43
5305-889-3000	197A	2
5305-889-3001	182	
5305-889-3001	187	28
5305-889-3001	190	141
5305-889-3001	210	83
5305-889-3001	275	
5305-889-3001	277	
5305-889-3116	182	
5305-889-3116	190	104
5305-889-3116	190	119
5305-889-3116	190	133
5305-889-3116	190	31
5305-889-3116	190	95
5305-889-3116	194	4
5305-889-3116	197	32
5305-889-3116	204	
5305-889-3116	205	2
5305-889-3116	205	34
5305-889-3116	182A	3
5305-889-3116	182A	8
5305-889-3116	189A	40
5305-889-3116	189A	84
5305-889-3118	190	44
5305-891-1689	37	
5305-891-1689	KITS	
5305-891-1782	F18	27
5305-891-1784	18	
5305-891-1784	18	71
5305-891-1784	18	75
5305-891-1784	KITS	
5305-895-6347	248	35
5305-899-1964	70	3
5305-900-0593	BULK	
5305-900-1829	134	79
5305-901-3090	40	
5305-901-6857	49	10
5305-902-5424	186	11
5305-902-5424	186	15
5305-902-5424	186	4
5305-902-6654	183A	16
5305-904-0251	113	2
5305-905-3777	28	
5305-905-9575	230	12
5305-905-9575	231	15
5305-908-2829	BULK	
5305-908-2829	KITS	

STOCK NUMBER	FIGURE NUMBER	ITEM NUMBER
5305-910-6871	167	47
5305-912-4816	KITS	
5305-912-4818	BULK	
5305-912-4833	BULK	
5305-912-4837	BULK	
5305-912-7307	18	
5305-912-7308	BULK	
5305-913-2787	32	37
5305-913-4084	119	355
5305-913-4084	BULK	
5305-914-6150	160	39
5305-914-9130	284	15
5305-915-2576	BULK	
5305-917-0989	286	12
5305-917-2672	286	14
5305-917-2684	BULK	
5305-922-6286	62	4
5305-922-6286	KITS	
5305-922-8777	BULK	
5305-922-8778	78	1
5305-922-8778	BULK	
5305-923-1123	183A	25
5305-925-4774	105	20
5305-925-4774	127	1
5305-925-4774	133	32
5305-925-4774	248	83
5305-925-4781	100	21
5305-925-7856	BULK	
5305-925-7857	KITS	
5305-925-7862	31	
5305-925-9674	18	
5305-925-9674	33	23
5305-925-9674	279	
5305-925-9674	KITS	
5305-925-9675	BULK	
5305-925-9682	13	30
5305-925-9682	13	60
5305-925-9682	13	81
5305-925-9682	34	
5305-925-9731	BULK	
5305-926-5480	287	14
5305-926-5481	286	10
5305-926-5688	148	22B
5305-926-5704	BULK	
5305-926-5705	284	12
5305-926-5705	BULK	
5305-926-5706	287	4
5305-926-5707	284	12
5305-926-5708	284	45
5305-926-5708	287	1
5305-926-5709	287	3
5305-926-5712	BULK	
5305-926-5716	287	12
5305-927-0006	BULK	
5305-927-1294	14	24
5305-927-2062	268	136
5305-930-1577	157	20
5305-930-1577	157	29
5305-930-1577	157	52
5305-930-1577	157	58
5305-930-1577	158	22
5305-930-1577	158	29
5305-930-1577	158	47
5305-930-1577	158	53
5305-930-1577	190	51
5305-933-7291	71	140
5305-934-0267	BULK	
5305-935-3047	18	40
5305-935-3047	18	89
5305-936-0045	51	77
5305-939-0754	BULK	
5305-939-9179	BULK	
5305-939-9187	150	6
5305-939-9188	150	5
5305-939-9221	QC1	168
5305-939-9221	259	15
5305-939-9221	64A	45
5305-939-9230	64A	63
5305-939-9250	176	3
5305-939-9250	177	2
5305-939-9258	248	36
5305-940-9488	64A	18
5305-940-9488	64A	52
5305-940-9489	248	100
5305-940-9489	248	11
5305-940-9489	248	2
5305-941-3551	52	1
5305-941-3551	52	2
5305-941-3551	105	3
5305-941-3551	105	6
5305-941-3551	124	4
5305-941-3551	133	29
5305-941-3551	133	33
5305-941-3551	137	4
5305-941-3551	137	9
5305-941-6403	192	77
5305-941-9437	137	15
5305-942-2226	BULK	
5305-942-8431	69	50
5305-942-8431	79	28
5305-942-8431	96	13
5305-943-0898	13	21
5305-943-0898	13	46
5305-943-0898	13	72
5305-943-5281	67A	5
5305-944-5929	BULK	
5305-944-8271	BULK	
5305-945-0502	248	110
5305-945-0505	70	25
5305-945-0505	78	1
5305-945-0505	82	1
5305-945-0505	248	97
5305-945-0505	190A	1
5305-945-4411	228	149
5305-946-7877	18	42A
5305-946-7877	18	45A
5305-947-4285	BULK	
5305-947-6995	13	65A
5305-947-6995	13	90A
5305-948-4042	68	9
5305-948-4152	18	
5305-950-2888	BULK	
5305-950-4518	64A	31
5305-952-0959	64A	20
5305-952-7756	BULK	
5305-954-0944	15	45
5305-954-0944	109	
5305-954-0944	110	37A
5305-954-0944	110	94
5305-954-0944	115	
5305-954-0944	116	
5305-954-0944	117	
5305-954-0944	119	
5305-954-0944	129	
5305-954-0944	220	
5305-954-0944	265	11
5305-954-0944	KITS	
5305-954-3938	190	112
5305-954-3938	192	25
5305-954-3938	193	49
5305-954-3938	205	9
5305-954-3938	234	18

STOCK NUMBER	FIGURE NUMBER	ITEM NUMBER
5305-954-6506	BULK	
5305-954-8985	BULK	
5305-954-8994	BULK	
5305-957-2383	184	54
5305-957-2387	BULK	
5305-957-6636	QC1	
5305-957-6636	216	67
5305-957-6643	184	47
5305-957-6643	192	61
5305-957-6643	182A	13
5305-957-6644	215	39
5305-957-6644	230	37
5305-957-6644	231	107
5305-957-6644	231	85
5305-957-7086	196	
5305-957-7086	204	
5305-957-7086	KITS	
5305-957-7595	184	53
5305-957-7811	34	
5305-957-7811	183	1
5305-957-7811	183	14
5305-957-7811	281	
5305-957-7811	282	12
5305-957-7814	30	41
5305-957-7814	183	23A
5305-957-7815	183	17
5305-957-7815	184	14
5305-957-7815	184	45
5305-957-7815	190	102
5305-957-7815	193	77
5305-957-7815	193	82
5305-957-7815	194	24
5305-957-7815	194	28
5305-957-7815	194	32
5305-957-7815	194	34
5305-957-7815	196	
5305-957-7815	202	26
5305-957-7815	202	28
5305-957-7815	203	34
5305-957-7815	182A	1
5305-957-7815	182A	6
5305-957-7817	194	43
5305-957-7817	203	23
5305-957-7818	189	17
5305-957-7819	190	26
5305-957-7820	190	18
5305-957-7824	182	
5305-958-0340	191	28
5305-958-0340	191	3
5305-958-0340	191	36
5305-958-0340	195	
5305-958-0340	195	30
5305-958-0340	195	32A
5305-958-0340	KITS	
5305-958-0585	95	121
5305-958-0585	116	
5305-958-0585	117	
5305-958-0585	119	
5305-958-0585	129	
5305-958-0585	139	
5305-958-0585	139	116
5305-958-0585	210	65
5305-958-0585	220	
5305-958-0585	221	15
5305-958-0585	221	47
5305-958-0585	KITS	
5305-958-0586	115	
5305-958-0586	116	
5305-958-0586	117	
5305-958-0586	129	
5305-958-0586	139	
5305-958-0598	20	62
5305-958-0664	BULK	
5305-958-0671	62	
5305-958-0671	QC1	
5305-958-0671	116	
5305-958-0671	117	
5305-958-0672	62	81
5305-958-0672	95	100
5305-958-0672	95	87
5305-958-0672	95	89
5305-958-0672	110	71
5305-958-0672	221	18A
5305-958-0672	221	20A
5305-958-1009	117	
5305-958-1009	234	27
5305-958-1011	BULK	
5305-958-1012	BULK	
5305-958-3409	10	
5305-958-3409	10	
5305-958-3409	20	16
5305-958-3409	20	3
5305-958-3409	20	57
5305-958-3409	20	75
5305-958-3409	211	
5305-958-3409	211	35
5305-958-3409	211	4
5305-958-3409	211	9
5305-958-3409	218	13
5305-958-3409	218	4
5305-958-3409	218	44A
5305-958-3409	218	9
5305-958-3409	219	
5305-958-3409	219	2
5305-958-3409	219	53
5305-958-3409	219	58
5305-958-3409	219	7
5305-958-3409	279	
5305-958-3409	KITS	
5305-958-3409	219A	114
5305-958-3409	219A	160
5305-958-3409	219A	40
5305-958-3409	219A	9
5305-958-4351	178	102
5305-958-4351	178	104
5305-958-4351	178	67
5305-958-4351	182	
5305-958-4351	276	
5305-958-4354	275	
5305-958-5451	BULK	
5305-958-5453	190	6
5305-958-5453	192	3
5305-958-5453	192	61A
5305-958-5453	192	96
5305-958-5453	260	34
5305-958-5453	150A	22
5305-958-5477	BULK	
5305-958-5483	190A	10
5305-958-5483	190A	13
5305-958-6230	67A	22
5305-958-6230	67A	29
5305-958-6373	167	9
5305-958-6381	234	33
5305-958-7483	BULK	
5305-958-9544	157	85
5305-958-9549	157	26
5305-958-9549	157	67
5305-958-9549	157	79
5305-958-9549	158	71
5305-958-9549	167	23
5305-958-9549	KITS	
5305-959-1713	190	58

STOCK NUMBER	FIGURE NUMBER	ITEM NUMBER
5305-959-1713	265	167
5305-959-1713	265	226
5305-959-1713	268	65
5305-959-2345	192	118
5305-959-2680	BULK	
5305-959-2716	BULK	
5305-959-4158	196	
5305-959-4158	204	33D
5305-959-6641	62	
5305-959-6641	204	
5305-959-6641	230	17
5305-959-6647	201	107
5305-959-6647	201	32
5305-959-6647	201	72
5305-963-2048	75	32A
5305-964-0054	183	39
5305-964-0780	BULK	
5305-964-2845	BULK	
5305-964-9149	69	14
5305-965-5879	204	
5305-965-5879	37A	10
5305-965-5879	37A	21
5305-965-5879	37A	75
5305-965-5882	BULK	
5305-969-4467	18	
5305-969-6487	111	13
5305-969-6495	BULK	
5305-969-6503	134	59
5305-969-6914	36B	11
5305-969-6914	36B	2
5305-969-6914	36B	4
5305-969-6914	37B	7
5305-973-4043	253	9
5305-973-8181	68	14
5305-978-9353	154	1
5305-978-9370	267	
5305-982-3093	70	1
5305-982-3093	KITS	
5305-983-6652	149	2
5305-983-6652	274	3
5305-983-6655	76	169A
5305-983-6658	BULK	
5305-983-6659	F18	34
5305-983-6661	F18	24
5305-983-6661	149	18
5305-983-6661	274	29
5305-983-6662	138	14
5305-983-6662	138	22
5305-983-6730	188	
5305-983-6730	200	
5305-983-7428	149	5
5305-983-7428	274	53
5305-983-7429	267	15
5305-983-7839	240	100
5305-983-8084	BULK	
5305-984-4976	190	123
5305-984-4976	205	28
5305-984-4976	277	
5305-984-4977	275	
5305-984-4978	190	116
5305-984-4979	185	16
5305-984-4983	232	5
5305-984-4983	260	50
5305-984-4983	260	52
5305-984-4983	197A	10
5305-984-4983	197A	15
5305-984-4988	182	
5305-984-4988	188	
5305-984-4988	188	15
5305-984-4988	190	3
5305-984-4988	190	67
5305-984-4988	190	82
5305-984-4988	191	22
5305-984-4988	192	17
5305-984-4988	192	2
5305-984-4988	192	69
5305-984-4988	194	1
5305-984-4988	194	225
5305-984-4988	194	42
5305-984-4988	195	20
5305-984-4988	196	
5305-984-4988	196	40
5305-984-4988	200	
5305-984-4988	204	
5305-984-4988	204	4
5305-984-4988	210	11
5305-984-4988	210	19
5305-984-4988	210	34
5305-984-4988	210	93
5305-984-4988	222	
5305-984-4988	226	38
5305-984-4988	233	18
5305-984-4988	278	
5305-984-4989	194	15
5305-984-4989	BULK	
5305-984-4992	188	47
5305-984-4992	196	13
5305-984-4992	275	
5305-984-4993	BULK	
5305-984-4993	182A	29
5305-984-5674	26	
5305-984-6189	188	
5305-984-6189	197	42
5305-984-6191	30	39
5305-984-6191	45	19
5305-984-6191	196	7
5305-984-6191	197	16
5305-984-6191	198	
5305-984-6191	210	70
5305-984-6191	277	
5305-984-6192	BULK	
5305-984-6193	39	
5305-984-6193	182	
5305-984-6193	188	
5305-984-6193	189	11
5305-984-6193	189	6
5305-984-6193	196	
5305-984-6193	196	10
5305-984-6193	196	2
5305-984-6193	198	
5305-984-6193	200	
5305-984-6193	204	
5305-984-6193	204	19
5305-984-6193	209	
5305-984-6193	264	9A
5305-984-6193	276	4
5305-984-6193	277	
5305-984-6193	277	
5305-984-6193	279	
5305-984-6194	277	
5305-984-6194	278	
5305-984-6194	278	
5305-984-6194	189A	6
5305-984-6195	204	
5305-984-6195	204	2
5305-984-6195	251	58D
5305-984-6195	277	
5305-984-6196	198	42
5305-984-6196	KITS	
5305-984-6197	BULK	
5305-984-6198	200	
5305-984-6198	200	

STOCK NUMBER	FIGURE NUMBER	ITEM NUMBER
5305-984-6201	BULK	
5305-984-6205	210	37
5305-984-6207	BULK	
5305-984-6208	207	
5305-984-6210	71	1
5305-984-6211	BULK	
5305-984-6213	BULK	
5305-984-6214	BULK	
5305-984-6215	BULK	
5305-984-6224	157	10
5305-984-6224	158	11
5305-984-6224	KITS	
5305-984-6226	190	21
5305-984-7341	BULK	
5305-988-1167	205	24
5305-988-1167	182A	12
5305-988-3785	280	5
5305-988-5308	BULK	
5305-989-0563	69	13
5305-989-0682	194	48
5305-989-0682	194	7
5305-989-0682	BULK	
5305-989-4864	195	35
5305-989-4864	195	38
5305-989-4864	BULK	
5305-989-4864	KITS	
5305-989-6265	BULK	
5305-989-7434	10	
5305-989-7434	33	37
5305-989-7434	34	
5305-989-7434	42	
5305-989-7434	44	11C
5305-989-7434	45	23
5305-989-7434	62	37
5305-989-7434	76	11C
5305-989-7434	95	123
5305-989-7434	95	13
5305-989-7434	95	139
5305-989-7434	95	14
5305-989-7434	95	140
5305-989-7434	95	15
5305-989-7434	95	49
5305-989-7434	95	57
5305-989-7434	95	7
5305-989-7434	95	71
5305-989-7434	95	75
5305-989-7434	95	82
5305-989-7434	95	99
5305-989-7434	QC1	
5305-989-7434	109	
5305-989-7434	11A	18B
5305-989-7434	110	36A
5305-989-7434	110	40A
5305-989-7434	110	46A
5305-989-7434	110	54
5305-989-7434	110	57
5305-989-7434	110	63
5305-989-7434	110	66
5305-989-7434	110	74
5305-989-7434	110	75
5305-989-7434	110	76
5305-989-7434	110	77
5305-989-7434	110	87
5305-989-7434	110	89
5305-989-7434	110	90
5305-989-7434	110	95
5305-989-7434	110	97
5305-989-7434	112	106
5305-989-7434	112	109
5305-989-7434	112	17
5305-989-7434	112	28
5305-989-7434	112	32
5305-989-7434	112	41
5305-989-7434	112	45
5305-989-7434	112	53
5305-989-7434	112	63
5305-989-7434	112	69
5305-989-7434	112	9
5305-989-7434	112	91
5305-989-7434	115	
5305-989-7434	116	
5305-989-7434	116	28A
5305-989-7434	117	
5305-989-7434	119	
5305-989-7434	129	
5305-989-7434	139	
5305-989-7434	139	100
5305-989-7434	139	102
5305-989-7434	143	
5305-989-7434	178	122
5305-989-7434	179	39
5305-989-7434	182	
5305-989-7434	188	
5305-989-7434	188	4
5305-989-7434	188	42
5305-989-7434	195	4
5305-989-7434	195	44
5305-989-7434	196	
5305-989-7434	198	
5305-989-7434	198	
5305-989-7434	198	22
5305-989-7434	198	48
5305-989-7434	200	
5305-989-7434	204	
5305-989-7434	204	
5305-989-7434	204	1A
5305-989-7434	206	10
5305-989-7434	206	6
5305-989-7434	206	9
5305-989-7434	208	
5305-989-7434	208	27
5305-989-7434	209	
5305-989-7434	209	1
5305-989-7434	213	
5305-989-7434	217	
5305-989-7434	218	
5305-989-7434	219	
5305-989-7434	220	
5305-989-7434	221	101
5305-989-7434	221	102
5305-989-7434	221	107
5305-989-7434	221	113
5305-989-7434	221	114
5305-989-7434	221	116
5305-989-7434	221	127
5305-989-7434	221	128
5305-989-7434	221	130
5305-989-7434	221	138
5305-989-7434	221	139
5305-989-7434	221	18
5305-989-7434	221	21
5305-989-7434	221	23
5305-989-7434	221	40
5305-989-7434	221	42
5305-989-7434	221	55
5305-989-7434	221	58
5305-989-7434	221	6
5305-989-7434	221	65
5305-989-7434	221	68
5305-989-7434	221	72
5305-989-7434	221	75
5305-989-7434	221	78

STOCK NUMBER	FIGURE NUMBER	ITEM NUMBER
5305-989-7434	221	83
5305-989-7434	221	84
5305-989-7434	221	88
5305-989-7434	221	94
5305-989-7434	226	22
5305-989-7434	249	20B
5305-989-7434	249	29
5305-989-7434	253	24B
5305-989-7434	258	7C
5305-989-7434	273	11A
5305-989-7434	273	18E
5305-989-7434	275	
5305-989-7434	277	
5305-989-7434	278	
5305-989-7434	BULK	
5305-989-7434	KITS	
5305-989-7434	217A	13
5305-989-7434	217A	14
5305-989-7434	217A	15
5305-989-7434	217A	22
5305-989-7434	217A	23
5305-989-7434	217A	5
5305-989-7434	217A	6
5305-989-7434	217A	7
5305-989-7434	217B	10
5305-989-7434	217B	16
5305-989-7434	217B	17
5305-989-7434	217B	2
5305-989-7434	217B	23
5305-989-7434	217B	24
5305-989-7434	217B	27
5305-989-7434	217B	28
5305-989-7434	217B	3
5305-989-7434	217B	5
5305-989-7434	217B	6
5305-989-7434	217B	9
5305-989-7434	219A	181
5305-989-7434	219A	185
5305-989-7434	219A	76
5305-989-7434	219A	85
5305-989-7435	28	
5305-989-7435	34	
5305-989-7435	42	9A
5305-989-7435	62	
5305-989-7435	95	107
5305-989-7435	95	108
5305-989-7435	95	110
5305-989-7435	95	41
5305-989-7435	95	44
5305-989-7435	95	83
5305-989-7435	95	91
5305-989-7435	95	96
5305-989-7435	QC1	
5305-989-7435	109	
5305-989-7435	112	108
5305-989-7435	112	20
5305-989-7435	112	4
5305-989-7435	115	
5305-989-7435	116	
5305-989-7435	117	
5305-989-7435	119	
5305-989-7435	129	
5305-989-7435	139	
5305-989-7435	139	104
5305-989-7435	139	115
5305-989-7435	143	
5305-989-7435	178	123
5305-989-7435	179	40
5305-989-7435	182	
5305-989-7435	188	
5305-989-7435	188	11
5305-989-7435	188	19
5305-989-7435	188	52
5305-989-7435	196	
5305-989-7435	198	
5305-989-7435	198	27
5305-989-7435	204	
5305-989-7435	204	6
5305-989-7435	207	
5305-989-7435	207	
5305-989-7435	207	
5305-989-7435	207	
5305-989-7435	208	40
5305-989-7435	213	
5305-989-7435	218	73E
5305-989-7435	220	
5305-989-7435	221	
5305-989-7435	221	132
5305-989-7435	276	
5305-989-7435	277	
5305-989-7435	KITS	
5305-989-7435	217B	2
5305-990-0379	165	49
5305-990-1356	10	
5305-990-1356	10	
5305-990-1356	10	
5305-990-1356	10	
5305-990-6431	71	142
5305-990-6444	58	11
5305-990-6444	62	
5305-990-6444	F18	13
5305-990-6444	QC1	
5305-990-6444	109	
5305-990-6444	188	
5305-990-6444	188	49A
5305-990-6444	196	49
5305-990-6444	196	7C
5305-990-6444	209	
5305-990-6444	211	
5305-990-6444	218	
5305-990-6444	218	73C
5305-990-6444	218	73D
5305-990-6444	218	74A
5305-990-6444	219	
5305-990-6444	251	42
5305-990-6444	275	
5305-990-6444	275	
5305-990-6444	277	
5305-990-6444	278	
5305-990-6444	BULK	
5305-990-6444	KITS	
5305-990-6444	189A	19
5305-990-6444	219A	176
5305-990-6444	219A	71
5305-990-6444	219A	80
5305-990-8386	192	90
5305-990-8386	67A	35
5305-990-9220	189A	24
5305-991-6546	189A	14
5305-993-0190	182	
5305-993-0190	194	73
5305-993-0190	197	54
5305-993-0190	197	9
5305-993-0190	182A	34
5305-993-0190	182A	37
5305-993-0190	182A	47
5305-993-0190	189A	17
5305-993-0190	189A	30
5305-993-0190	189A	33
5305-993-0191	26	29
5305-993-0191	67A	10
5305-993-1612	BULK	

STOCK NUMBER	FIGURE NUMBER	ITEM NUMBER
5305-993-1848	62	
5305-993-1848	95	161
5305-993-1848	95	42
5305-993-1848	95	43
5305-993-1848	109	
5305-993-1848	112	10
5305-993-1848	112	110
5305-993-1848	115	
5305-993-1848	116	
5305-993-1848	117	
5305-993-1848	119	
5305-993-1848	129	
5305-993-1848	139	
5305-993-1848	178	119
5305-993-1848	182	
5305-993-1848	182	
5305-993-1848	191	1
5305-993-1848	191	35
5305-993-1848	191	41
5305-993-1848	191	9
5305-993-1848	195	1
5305-993-1848	195	24
5305-993-1848	195	3
5305-993-1848	195	40
5305-993-1848	195	48
5305-993-1848	196	
5305-993-1848	204	
5305-993-1848	206	8
5305-993-1848	208	3
5305-993-1848	213	
5305-993-1848	220	
5305-993-1848	221	119
5305-993-1848	221	48
5305-993-1848	221	8
5305-993-1848	222	
5305-993-1848	276	
5305-993-1848	278	
5305-993-1848	KITS	
5305-993-1849	219	
5305-993-1851	95	104
5305-993-1851	95	161
5305-993-1851	95	85
5305-993-1851	95	86
5305-993-1851	100	8
5305-993-1851	109	
5305-993-1851	110	58
5305-993-1851	110	98
5305-993-1851	112	105
5305-993-1851	112	26
5305-993-1851	112	37
5305-993-1851	112	5
5305-993-1851	112	61
5305-993-1851	115	
5305-993-1851	116	
5305-993-1851	117	
5305-993-1851	119	
5305-993-1851	129	
5305-993-1851	139	
5305-993-1851	139	114
5305-993-1851	143	
5305-993-1851	178	120
5305-993-1851	178	145
5305-993-1851	204	24
5305-993-1851	206	7
5305-993-1851	208	
5305-993-1851	208	31
5305-993-1851	213	
5305-993-1851	220	
5305-993-1851	221	43
5305-993-1851	277	
5305-993-1851	KITS	
5305-993-1851	219A	88
5305-993-2463	209	
5305-993-2464	BULK	
5305-993-2738	34	
5305-993-2738	207	
5305-995-3440	95	138
5305-995-3440	95	90
5305-995-3440	115	
5305-995-3440	117	
5305-995-3440	119	
5305-995-3440	129	
5305-995-3440	178	125
5305-995-3440	179	44
5305-995-3440	205	7
5305-995-3440	275	
5305-995-3441	95	163
5305-995-3441	95	84
5305-995-3441	109	
5305-995-3441	115	
5305-995-3441	117	
5305-995-3441	119	
5305-995-3441	129	
5305-995-3441	179	42
5305-995-3441	213	
5305-995-3441	221	14
5305-995-3441	253	27A
5305-995-3441	277	
5305-995-3441	KITS	
5305-995-3442	15	45A
5305-995-3442	95	122
5305-995-3442	109	
5305-995-3442	110	96
5305-995-3442	117	
5305-995-3442	119	
5305-995-3442	143	
5305-995-3442	178	121
5305-995-3442	179	38
5305-995-3442	221	120
5305-995-3442	257	
5305-995-3444	95	88
5305-995-3444	QC1	
5305-995-3444	109	
5305-995-3444	112	113
5305-995-3444	112	116
5305-995-3444	112	57
5305-995-3444	119	
5305-995-3444	129	
5305-995-3444	178	124
5305-995-3444	179	41
5305-995-3444	220	
5305-995-3444	221	54
5305-995-3444	276	
5305-995-3444	278	
5305-995-3444	KITS	
5305-995-3444	219A	174
5305-995-3444	219A	69
5305-995-4673	190A	20
5305-995-6311	95	52
5305-995-6311	109	
5305-995-6311	115	
5305-995-6311	117	
5305-995-6311	119	
5305-995-6311	129	
5305-995-6311	139	107
5305-995-6311	139	110
5305-995-6311	178	146
5305-995-6311	179	
5305-995-6311	BULK	
5305-995-6653	67A	15
5305-995-6653	BULK	
5305-995-6915	79	1

STOCK NUMBER	FIGURE NUMBER	ITEM NUMBER
5305-995-8792	68	1
5305-995-8792	107	13
5305-998-0654	13	29
5305-998-0654	13	58
5305-998-0654	13	80
5305-998-0654	70	2
5305-998-0654	KITS	
5305-998-3216	30	27
5305-999-4095	BULK	
5306-003-0644	223	150
5306-003-0645	223	207
5306-003-4112	223	127
5306-003-4157	222	19
5306-003-4158	242	30
5306-003-5274	61	21
5306-003-6910	242	29
5306-004-1023	239	42
5306-004-1023	239	76
5306-004-7265	223	192
5306-005-0546	242	35
5306-005-0547	242	34
5306-005-0548	242	31
5306-006-0311	102	7C
5306-006-0311	103	6A
5306-006-0311	222	140
5306-006-0311	222	148
5306-006-0311	244	15
5306-006-0311	244	24
5306-006-0661	243	15
5306-006-0662	243	22
5306-007-2555	75	67A
5306-007-5245	223	164
5306-007-9574	75	66A
5306-007-9574	KITS	
5306-008-5024	244	79
5306-008-5026	222	208
5306-008-5026	222	81
5306-008-5026	KITS	
5306-008-5030	222	172
5306-008-5030	222	91
5306-008-5030	244	62
5306-008-5033	72	1
5306-008-5034	72	40
5306-008-5034	72	72
5306-008-5034	KITS	
5306-008-5035	72	41
5306-008-5035	72	73
5306-008-5035	KITS	
5306-008-8853	223	145
5306-023-6235	72	40
5306-023-6235	72	72
5306-023-7195	280	3
5306-027-3182	92	42
5306-027-3182	92	42A
5306-044-2257	239	166
5306-044-2257	KITS	
5306-044-2259	222	128
5306-044-2259	237	6
5306-044-2259	KITS	
5306-044-2260	239	42
5306-044-2260	239	76
5306-051-6892	81	166B
5306-051-6896	118	
5306-051-6897	118	
5306-054-3630	89	104
5306-054-3631	76	165A
5306-055-7536	BULK	
5306-056-2379	118	37
5306-056-2379	KITS	
5306-056-7950	81	99
5306-057-8309	BULK	
5306-059-9283	93	9
5306-062-2699	BULK	
5306-064-4722	118	82
5306-068-1351	269	68
5306-070-1894	BULK	
5306-079-2567	BULK	
5306-082-6748	KITS	
5306-087-3748	BULK	
5306-087-9561	134	43
5306-088-1485	240	2
5306-088-4947	118	86
5306-088-7846	BULK	
5306-089-3209	BULK	
5306-121-6669	75	96
5306-121-8845	66	16
5306-121-8845	66	5
5306-121-8846	222	18
5306-121-8846	223	12
5306-121-8848	223	34
5306-121-8848	223	6
5306-121-8911	223	11
5306-121-8911	223	35
5306-121-8911	228	129C
5306-123-0742	62	71
5306-123-0750	244	84
5306-123-0750	244	95
5306-123-0752	244	56
5306-123-0752	244	67
5306-126-4394	75	102
5306-132-4978	36	8
5306-136-5023	81	149
5306-138-6386	242	23
5306-138-6386	242	32
5306-138-6386	243	1
5306-141-4511	228	101
5306-141-4513	BULK	
5306-141-4514	BULK	
5306-141-4515	BULK	
5306-141-4517	BULK	
5306-141-4524	BULK	
5306-141-4758	21	25
5306-141-4758	222	41
5306-141-4765	222	107
5306-141-4765	237	1
5306-141-4765	KITS	
5306-142-4227	65	81
5306-142-4228	65	36A
5306-142-4240	75	55
5306-142-4755	75	47
5306-144-3649	KITS	
5306-144-3650	62	12
5306-144-3650	66	31
5306-144-3650	QC1	21
5306-144-3650	QC1	41
5306-144-3650	KITS	
5306-144-3706	KITS	
5306-144-3710	34	44
5306-144-3710	F15	24
5306-144-3851	60	21
5306-144-3852	BULK	
5306-144-3853	F20	15
5306-144-3865	22	6
5306-144-4004	BULK	
5306-144-4072	15	21
5306-144-4074	378	23
5306-144-4075	15	5
5306-145-7022	BULK	
5306-145-7024	KITS	
5306-145-7026	KITS	
5306-145-7029	BULK	
5306-145-7036	BULK	

STOCK NUMBER	FIGURE NUMBER	ITEM NUMBER
5306-145-7089	154	10
5306-145-7659	223	43
5306-145-7659	428	12
5306-145-7719	BULK	
5306-150-3142	KITS	
5306-150-3210	KITS	
5306-150-3211	KITS	
5306-150-3213	KITS	
5306-150-3216	KITS	
5306-150-3337	KITS	
5306-150-3338	KITS	
5306-150-3473	76	165A
5306-150-3533	37B	35
5306-150-3588	269	6B
5306-150-3588	KITS	
5306-150-9086	228	25
5306-150-9087	245	20
5306-150-9102	60	3
5306-150-9102	61	7
5306-150-9105	37	1
5306-150-9105	KITS	
5306-150-9105	219A	121
5306-150-9105	219A	16
5306-150-9285	BULK	
5306-150-9527	KITS	
5306-150-9550	BULK	
5306-150-9842	BULK	
5306-150-9867	KITS	
5306-150-9872	KITS	
5306-150-9873	KITS	
5306-150-9908	223	116
5306-150-9908	BULK	
5306-150-9909	KITS	
5306-150-9918	15	3
5306-150-9918	36	
5306-150-9918	37B	17
5306-150-9918	KITS	
5306-150-9919	37B	46
5306-150-9922	11	39
5306-150-9924	110	
5306-150-9928	BULK	
5306-150-9956	BULK	
5306-151-0284	21	2
5306-151-0284	KITS	
5306-151-0323	BULK	
5306-151-0324	228	157
5306-151-0324	245	18
5306-151-0326	228	156
5306-151-0326	228	172
5306-151-0326	228	183
5306-151-0326	228	52
5306-151-0326	229	40
5306-151-0328	228	32
5306-151-0328	246	5
5306-151-0330	223	81
5306-151-0331	222	40
5306-151-0331	226	15
5306-151-0331	237	21
5306-151-0331	237	49
5306-151-0331	244	15
5306-151-0331	244	24
5306-151-0331	246	2
5306-151-0331	268	177
5306-151-0331	428	13
5306-151-0331	KITS	
5306-151-0332	226	6
5306-151-0332	228	10
5306-151-0332	268	208
5306-151-0334	228	100
5306-151-0334	228	69
5306-151-0334	228	76
5306-151-0523	15	17
5306-151-0523	15	27
5306-151-0523	KITS	
5306-151-0524	22	25
5306-151-0524	22	5
5306-151-0524	76	160B
5306-151-0525	33	44
5306-151-0525	KITS	
5306-151-0532	235	2
5306-151-0775	KITS	
5306-151-0776	59	
5306-151-0776	KITS	
5306-151-0777	95	40
5306-151-0777	116	
5306-151-0777	KITS	
5306-151-0778	81	5B
5306-151-0778	116	
5306-151-0778	KITS	
5306-151-0779	112	50
5306-151-0779	119	318
5306-151-0779	KITS	
5306-151-0780	29	2A
5306-151-0780	F17	30
5306-151-0780	36A	30
5306-151-0780	36B	27
5306-151-0780	37B	16
5306-151-0780	KITS	
5306-151-0781	37B	15
5306-151-0782	116	
5306-151-0782	36A	12
5306-151-0782	36A	35
5306-151-0782	36B	14
5306-151-0784	92	21
5306-151-0784	92	79
5306-151-0784	279	
5306-151-0785	18	
5306-151-0785	KITS	
5306-151-1006	KITS	
5306-151-1178	BULK	
5306-151-1179	BULK	
5306-151-1180	KITS	
5306-151-1194	BULK	
5306-151-1337	F20	6
5306-151-1409	KITS	
5306-151-1412	BULK	
5306-151-1413	229	22
5306-151-1413	BULK	
5306-151-1414	KITS	
5306-151-1415	15	8
5306-151-1415	11A	13
5306-151-1416	KITS	
5306-151-1418	BULK	
5306-151-1419	37A	44
5306-151-1419	37A	62
5306-151-1420	61	24
5306-151-1420	F17	12
5306-151-1420	F17	19
5306-151-1421	37A	90
5306-151-1423	11	143
5306-151-1423	11	147
5306-151-1423	28	24T
5306-151-1423	139	
5306-151-1423	218	36A
5306-151-1423	37A	101
5306-151-1423	219A	11
5306-151-1423	219A	116
5306-151-1424	218	1
5306-151-1424	218	11
5306-151-1424	218	36
5306-151-1424	218	46
5306-151-1424	218	6

STOCK NUMBER	FIGURE NUMBER	ITEM NUMBER
5306-151-1424	219A	126
5306-151-1424	219A	21
5306-151-1426	13	38
5306-151-1426	13	66
5306-151-1426	13	8
5306-151-1426	37	35C
5306-151-1426	F16	11
5306-151-1426	F16	41
5306-151-1426	F16	44
5306-151-1426	F16	8
5306-151-1426	218	12B
5306-151-1426	218	17
5306-151-1426	218	53
5306-151-1426	218	8A
5306-151-1426	219	10
5306-151-1426	219	20
5306-151-1426	219	48
5306-151-1426	219	61
5306-151-1426	219	65
5306-151-1426	219	95
5306-151-1426	258	11C
5306-151-1426	284	40
5306-151-1426	285	30
5306-151-1426	KITS	
5306-151-1426	219A	132
5306-151-1426	219A	142
5306-151-1426	219A	161
5306-151-1426	219A	30
5306-151-1426	219A	41
5306-151-1426	219A	56
5306-151-1427	18	106
5306-151-1427	18	57
5306-151-1427	83	61
5306-151-1427	95	
5306-151-1427	95	113A
5306-151-1427	95	178A
5306-151-1427	95	38A
5306-151-1427	211	21
5306-151-1427	218	31
5306-151-1427	219	23
5306-151-1427	219	44
5306-151-1427	219	69
5306-151-1427	219	91
5306-151-1427	229	27
5306-151-1427	KITS	
5306-151-1512	BULK	
5306-151-1514	BULK	
5306-151-1530	238	3
5306-151-1945	BULK	
5306-151-1964	BULK	
5306-151-1965	31	
5306-151-1965	32	
5306-151-1965	KITS	
5306-151-1966	223	115
5306-151-1966	223	50
5306-151-1966	229	1
5306-151-1967	BULK	
5306-151-1968	228	58
5306-151-1968	KITS	
5306-151-1969	BULK	
5306-151-1970	15	9
5306-151-1970	KITS	
5306-151-2311	37B	18
5306-151-2311	BULK	
5306-151-2323	BULK	
5306-151-2326	BULK	
5306-151-2394	11	98
5306-151-2468	22	17
5306-151-2468	22	22
5306-151-2527	62	84
5306-151-2527	QC1	188
5306-151-2527	KITS	
5306-151-2540	BULK	
5306-151-2592	BULK	
5306-151-2615	KITS	
5306-151-3091	BULK	
5306-151-3540	22	12
5306-151-5705	11B	95
5306-151-9741	65	22A
5306-151-9755	65	73A
5306-156-2225	15	7
5306-156-2278	BULK	
5306-156-2327	BULK	
5306-156-2331	BULK	
5306-156-2339	BULK	
5306-156-2341	25	33
5306-156-2341	KITS	
5306-156-2345	BULK	
5306-156-2347	KITS	
5306-156-2392	31	25C
5306-156-2392	BULK	
5306-156-2398	228	87
5306-156-2524	BULK	
5306-156-2525	BULK	
5306-156-2527	BULK	
5306-156-2533	222	
5306-156-2694	BULK	
5306-156-2704	15	
5306-156-2707	BULK	
5306-156-2753	BULK	
5306-156-2757	BULK	
5306-156-2824	61	4
5306-156-2833	61	16
5306-156-2835	60	17
5306-167-3669	22	3
5306-167-3669	KITS	
5306-167-3686	BULK	
5306-167-3695	92	6
5306-174-3863	BULK	
5306-174-3964	37B	4
5306-174-3964	BULK	
5306-174-3968	KITS	
5306-174-4074	BULK	
5306-174-4108	245	2C
5306-174-4108	245	21
5306-174-4108	246	6
5306-174-4112	268	173
5306-174-4113	222	5
5306-174-4113	228	7
5306-174-4114	222	6
5306-174-4114	223	44
5306-174-4114	228	8
5306-174-4115	222	7
5306-174-4115	228	117
5306-174-4115	228	127F
5306-174-4115	228	15
5306-174-4115	228	75
5306-174-4115	228	9
5306-174-4115	228	99
5306-174-4116	228	51
5306-174-4117	238	5
5306-174-4118	42B	14
5306-174-4728	223	94
5306-177-5479	42B	33
5306-177-5479	189A	
5306-180-0060	31	17
5306-180-0060	KITS	
5306-180-0363	KITS	
5306-180-0444	69	7
5306-180-0444	70	22

STOCK NUMBER	FIGURE NUMBER	ITEM NUMBER
5306-180-0456	BULK	
5306-180-0464	BULK	
5306-180-0465	BULK	
5306-180-1483	43	13F
5306-180-1485	BULK	
5306-180-1711	223	92
5306-180-1738	BULK	
5306-180-1738	189A	
5306-180-1739	76	118B
5306-180-1739	KITS	
5306-180-1784	BULK	
5306-180-1786	BULK	
5306-180-1799	BULK	
5306-180-1920	KITS	
5306-180-1925	22	36
5306-180-2677	42A	26
5306-180-2677	42C	27
5306-180-2695	18	91D
5306-180-2695	18	98D
5306-180-2695	88	84D
5306-180-2695	275	14D
5306-180-2695	KITS	
5306-180-2696	BULK	
5306-180-2716	21	53
5306-180-2716	81	142
5306-180-2716	83	286
5306-180-2723	92	3
5306-180-2723	92	61
5306-180-2723	KITS	
5306-180-2725	83	279
5306-180-2725	87	8
5306-180-2730	32	58A
5306-180-2730	KITS	
5306-180-2731	BULK	
5306-180-2749	59	7B
5306-180-2749	264	1
5306-180-2750	21	
5306-180-2751	11	87
5306-180-2751	22	41
5306-180-2751	24	7
5306-180-2751	87	14
5306-180-2752	25	
5306-180-2753	33	
5306-180-2753	QC1	2
5306-180-2753	KITS	
5306-180-2754	87	11
5306-180-2756	22	41A
5306-180-2757	21	59
5306-180-2769	13	88
5306-180-2769	64A	1
5306-180-2770	BULK	
5306-180-3342	BULK	
5306-180-3347	21	
5306-180-3354	BULK	
5306-180-3360	117	
5306-180-3360	119	271
5306-180-3360	129	
5306-182-1518	BULK	
5306-182-1526	31	
5306-182-1526	208	24
5306-182-1527	24	1
5306-182-1527	24	6
5306-182-1527	76	8
5306-182-1527	89	93
5306-182-1527	KITS	
5306-182-1528	BULK	
5306-182-1531	BULK	
5306-182-1781	31	17A
5306-182-1797	76	118B
5306-182-1797	76	121
5306-182-1797	273	25
5306-182-1800	BULK	
5306-182-1817	BULK	
5306-182-1851	129	
5306-182-1853	13	87
5306-182-1853	62	50
5306-182-1853	QC1	152
5306-182-1853	KITS	
5306-182-1854	62	44
5306-182-1854	QC1	
5306-182-1854	QC1	150
5306-182-1854	42C	1
5306-182-1854	KITS	
5306-182-1855	21	14A
5306-182-1855	21	16A
5306-182-1855	42A	2
5306-182-1860	22	
5306-182-1861	18	
5306-182-1863	25	16
5306-182-1863	275	
5306-182-1863	KITS	
5306-182-1864	218	
5306-182-1864	218	27
5306-182-1866	25	2
5306-182-1898	BULK	
5306-182-1899	BULK	
5306-182-1912	24	2
5306-182-1912	KITS	
5306-182-1915	BULK	
5306-182-1916	BULK	
5306-182-1918	BULK	
5306-182-1921	BULK	
5306-182-1925	208	37
5306-182-1926	89	92
5306-182-1946	64A	3
5306-182-1958	37	1
5306-182-1958	135	15
5306-182-1958	139	
5306-182-1958	211	1
5306-182-1958	211	32
5306-182-1958	211	41A
5306-182-1958	211	6
5306-182-1958	219	
5306-182-1958	219	39
5306-182-1958	219	4
5306-182-1958	219	55
5306-182-1958	219	80
5306-182-1958	226	25
5306-182-1958	265	5
5306-182-1958	268	2
5306-182-1958	KITS	
5306-182-1959	25	
5306-182-1960	17	11
5306-182-1960	17	6
5306-182-1960	20	23
5306-182-1960	20	48
5306-182-1960	118	95
5306-182-1960	KITS	
5306-182-1961	BULK	
5306-182-1962	37	14
5306-182-1962	81	151
5306-182-1963	BULK	
5306-182-1964	257	19A
5306-182-1965	112	39
5306-182-1965	213	
5306-182-1965	221	
5306-182-1965	257	19A
5306-182-1966	20	34
5306-182-1966	KITS	
5306-182-2005	112	34
5306-182-2005	116	
5306-182-2005	119	157

STOCK NUMBER	FIGURE NUMBER	ITEM NUMBER
5306-182-2005	257	15A
5306-182-2006	BULK	
5306-182-2007	116	
5306-182-2007	119	32
5306-182-2007	119	379
5306-182-2008	112	76
5306-182-2008	119	
5306-182-2008	129	
5306-182-2009	112	76
5306-182-2009	116	
5306-182-2009	119	
5306-182-2009	119	21
5306-182-2009	119	93
5306-182-2009	129	
5306-182-2010	119	47
5306-182-2010	139	112
5306-182-2010	KITS	
5306-182-2011	45	11A
5306-182-2011	112	47
5306-182-2011	117	
5306-182-2011	129	
5306-182-2011	KITS	
5306-182-2012	95	21
5306-182-2012	95	26
5306-182-2012	116	
5306-182-2012	119	295
5306-182-2013	26	11
5306-182-2013	207	
5306-182-2013	37A	26
5306-182-2014	207	
5306-182-2015	29	
5306-182-2015	QC1	31
5306-182-2015	117	
5306-182-2015	129	
5306-182-2015	273	4
5306-182-2015	KITS	
5306-182-2016	76	145
5306-182-2016	265	48
5306-182-2016	268	10
5306-182-2016	KITS	
5306-182-2017	31	
5306-182-2017	F17	24
5306-182-2017	F17	6
5306-182-2017	119	124
5306-182-2017	139	
5306-182-2017	207	
5306-182-2017	211	19
5306-182-2017	211	50
5306-182-2017	265	276
5306-182-2017	265	46
5306-182-2017	265	59
5306-182-2017	268	240
5306-182-2017	268	30
5306-182-2017	268	9
5306-182-2017	KITS	
5306-182-2018	36	11
5306-182-2018	83	323
5306-182-2018	228	41
5306-182-2019	20	59
5306-182-2019	81	175
5306-182-2019	265	309
5306-182-2019	268	261
5306-182-2020	109	58A
5306-182-2020	109	61A
5306-182-2020	119	227
5306-182-2020	240	24
5306-182-2020	KITS	
5306-182-2021	119	375
5306-182-2021	KITS	
5306-182-2022	71	79
5306-182-2022	109	13A
5306-182-2022	109	54A
5306-182-2022	119	329
5306-182-2024	81	155
5306-182-2024	118	78
5306-182-2024	KITS	
5306-182-2026	118	78
5306-182-2026	BULK	
5306-182-2031	275	
5306-182-2031	KITS	
5306-182-2033	KITS	
5306-182-2038	36	12A
5306-182-2039	228	112
5306-182-2040	21	
5306-182-2040	21	14A
5306-182-2040	KITS	
5306-182-2041	BULK	
5306-182-2056	BULK	
5306-182-2057	10	
5306-182-2057	28	
5306-182-2057	28	14F
5306-182-2057	117	
5306-182-2057	119	361
5306-182-2057	129	
5306-182-2057	213	
5306-182-2057	213	4
5306-182-2057	220	
5306-182-2057	221	32
5306-182-2057	221	33
5306-182-2057	221	36
5306-182-2057	221	41
5306-182-2057	221	56
5306-182-2057	221	57
5306-182-2057	221	69
5306-182-2057	251	45A
5306-182-2057	270	16B
5306-182-2057	KITS	
5306-182-2058	10	
5306-182-2058	20	
5306-182-2058	20	
5306-182-2058	20	31
5306-182-2058	20	57
5306-182-2058	129	
5306-182-2058	135	2
5306-182-2058	221	
5306-182-2058	245	25
5306-182-2058	246	11
5306-182-2058	246	14
5306-182-2059	32	42
5306-182-2059	47	3
5306-182-2059	71	88
5306-182-2059	129	22A
5306-182-2059	129	23B
5306-182-2059	211	23
5306-182-2059	245	12
5306-182-2059	KITS	
5306-182-2060	20	88A
5306-182-2060	83	150B
5306-182-2061	22	41D
5306-182-2061	76	177
5306-182-2061	89	117
5306-182-2061	95	151
5306-182-2061	229	12
5306-182-2061	KITS	
5306-182-2062	129	
5306-182-2062	37A	17
5306-182-2062	37A	7
5306-182-2062	KITS	
5306-182-2063	116	
5306-182-2063	245	14
5306-182-2064	BULK	
5306-202-1629	75	1

STOCK NUMBER	FIGURE NUMBER	ITEM NUMBER	STOCK NUMBER	FIGURE NUMBER	ITEM NUMBER
5306-202-1752	75	1	5306-208-9089	239	154
5306-202-1774	75	1	5306-208-9089	242	22
5306-206-0804	11	35	5306-208-9089	243	2
5306-206-1329	36B	9	5306-208-9089	244	1
5306-206-1329	37B	3	5306-208-9089	KITS	
5306-206-2332	61	39	5306-208-9806	55	12
5306-206-2865	11	60	5306-213-8829	62	
5306-206-3810	60	23	5306-225-4583	34	35
5306-206-4539	BULK		5306-226-3915	BULK	
5306-206-4539	KITS		5306-226-3916	91	3
5306-206-4910	BULK		5306-226-3916	KITS	
5306-206-4911	BULK		5306-226-6617	BULK	
5306-206-5745	BULK		5306-226-6618	BULK	
5306-206-5745	219A	164	5306-226-6622	239	54
5306-206-5745	219A	59	5306-226-6622	KITS	
5306-206-5747	BULK		5306-226-6623	239	55
5306-206-5812	50	6	5306-226-7935	239	105
5306-206-5812	KITS		5306-226-7935	KITS	
5306-206-6370	222	41A	5306-253-1716	102	7C
5306-206-6370	KITS		5306-253-1716	103	6A
5306-206-6374	242	24	5306-253-1716	222	140
5306-206-6374	KITS		5306-253-1716	222	148
5306-206-6376	45	10A	5306-253-1716	244	15
5306-206-6379	KITS		5306-253-1716	244	24
5306-206-6397	243	3	5306-263-7798	BULK	
5306-206-6397	244	8	5306-267-9230	11B	
5306-206-6397	KITS		5306-267-9231	11B	
5306-206-6407	285	57	5306-267-9233	BULK	
5306-206-7088	42C	4	5306-267-9234	BULK	
5306-206-9248	262A	2	5306-269-2825	BULK	
5306-207-0979	242	21	5306-269-2832	BULK	
5306-207-0980	222	106	5306-269-4454	11B	10
5306-207-0980	237	28	5306-271-6885	37B	34
5306-207-0980	KITS		5306-272-2143	BULK	
5306-207-1060	240	46	5306-274-2119	83	103
5306-207-1060	244	110	5306-274-2119	95	94A
5306-207-1060	KITS		5306-274-2119	F16	50
5306-207-1067	BULK		5306-274-2119	220	
5306-207-2307	286	15	5306-274-2119	221	31
5306-207-2307	42B		5306-274-2119	37A	28
5306-207-2310	53	31B	5306-274-2119	KITS	
5306-207-2310	54	15	5306-275-8501	287	28
5306-207-2322	287	30	5306-275-9524	BULK	
5306-207-2328	239	6	5306-275-9528	BULK	
5306-207-2345	BULK		5306-275-9530	BULK	
5306-207-3504	62	26	5306-275-9532	42B	46
5306-207-3504	QC1	126	5306-275-9552	BULK	
5306-207-3504	QC1	18	5306-275-9558	BULK	
5306-207-3504	KITS		5306-275-9563	BULK	
5306-207-5874	65	25	5306-275-9567	BULK	
5306-207-8744	284	2	5306-275-9641	183A	5
5306-207-8744	285	2	5306-276-8328	BULK	
5306-207-9786	BULK		5306-281-1644	33	9
5306-207-9791	BULK		5306-281-5588	BULK	
5306-208-3636	76	126A	5306-281-8483	BULK	
5306-208-3645	F20	11	5306-281-9967	21	61
5306-208-3646	BULK		5306-281-9968	21	60
5306-208-3646	KITS		5306-281-9995	43	13G
5306-208-3659	BULK		5306-282-0000	KITS	
5306-208-3659	KITS		5306-282-2216	21	60
5306-208-4612	239	118	5306-282-2222	11	46
5306-208-4612	240	14	5306-282-2228	11	42
5306-208-4612	240	16	5306-282-2229	15	13
5306-208-4612	244	14	5306-282-2229	KITS	
5306-208-4612	244	23	5306-282-2678	BULK	
5306-208-4612	KITS		5306-282-4111	KITS	
5306-208-5060	21	4	5306-282-4303	11	105
5306-208-5060	62	17	5306-282-4304	21	53
5306-208-5060	QC1	184	5306-282-4304	KITS	
5306-208-5060	KITS		5306-282-4310	88	87
5306-208-9036	BULK		5306-282-4311	BULK	

STOCK NUMBER	FIGURE NUMBER	ITEM NUMBER	STOCK NUMBER	FIGURE NUMBER	ITEM NUMBER
5306-282-4313	270	2	5306-292-8252	268	230A
5306-282-5518	BULK		5306-292-8252	268	239
5306-282-5821	95	22	5306-292-8252	268	3
5306-282-5821	112		5306-292-8252	278	
5306-282-5821	116		5306-292-8261	42A	15
5306-282-5843	116		5306-292-8261	42B	73
5306-283-0169	BULK		5306-292-8261	42C	16
5306-283-0557	242	26	5306-292-8261	KITS	
5306-283-0557	BULK		5306-292-8276	BULK	
5306-285-2586	259	10	5306-292-8282	BULK	
5306-285-2611	BULK		5306-292-8285	33	1
5306-285-5325	33	2	5306-292-8285	222	23
5306-285-5325	11A	86	5306-292-8532	BULK	
5306-285-5325	222	22	5306-292-8541	BULK	
5306-285-5326	BULK		5306-292-8542	286	18
5306-285-5502	BULK		5306-292-8542	287	31
5306-285-7524	BULK		5306-292-8543	287	24
5306-285-7528	51	39	5306-292-8557	222	41B
5306-285-7529	BULK		5306-292-8558	KITS	
5306-285-7546	21	48A	5306-292-8575	240	7
5306-286-0564	BULK		5306-292-8575	KITS	
5306-286-0836	F15	54	5306-292-8577	236	1
5306-286-0836	BULK		5306-297-0042	BULK	
5306-286-1349	BULK		5306-298-2815	BULK	
5306-286-1349	KITS		5306-298-4763	11	51
5306-286-1353	21	53	5306-402-3158	222	14
5306-286-1353	KITS		5306-408-6864	223	5
5306-286-1355	11	45	5306-415-6102	243	9
5306-286-1361	20	39	5306-429-0377	BULK	
5306-286-1452	239	119	5306-437-9512	222	14
5306-286-1452	KITS		5306-437-9512	223	139
5306-286-1454	222	140	5306-443-5560	244	79
5306-286-1454	222	148	5306-443-5561	244	90
5306-286-1454	222	40	5306-443-5561	KITS	
5306-286-1454	239	98	5306-444-6482	263	5
5306-286-1454	244	15	5306-452-2104	63	1
5306-286-1454	244	24	5306-456-6894	69	1
5306-286-1454	KITS		5306-456-6894	70	15
5306-286-1459	BULK		5306-456-6894	KITS	
5306-286-1524	QC1	36	5306-458-2099	69	1
5306-286-1524	KITS		5306-459-1112	223	19
5306-286-3300	BULK		5306-459-1112	223	26
5306-286-3307	235	13	5306-459-1112	KITS	
5306-286-3307	KITS		5306-460-8554	223	56
5306-286-3319	BULK		5306-462-3212	64A	51
5306-292-5105	239	106	5306-472-2912	81	183
5306-292-5105	KITS		5306-472-2912	83	316
5306-292-5871	KITS		5306-486-5619	223	86
5306-292-5872	QC1	37	5306-487-4746	270	50
5306-292-5872	BULK		5306-515-7310	36	8
5306-292-6178	BULK		5306-515-8064	11	144
5306-292-6180	BULK		5306-515-8064	11	148
5306-292-6463	BULK		5306-515-8064	76	126A
5306-292-6466	16	6	5306-515-8064	QC1	4
5306-292-6466	222	141	5306-515-8064	11C	15
5306-292-6466	222	147	5306-515-8064	218	1
5306-292-6466	237	18	5306-515-8064	218	41
5306-292-6466	237	46	5306-515-8064	219	
5306-292-6466	239	132	5306-515-8064	219	35
5306-292-6466	240	15	5306-515-8064	249	1
5306-292-6466	KITS		5306-515-8064	37A	13
5306-292-8252	31		5306-515-8064	37A	68
5306-292-8252	81	149	5306-515-8064	KITS	
5306-292-8252	119		5306-515-8064	219A	1
5306-292-8252	211	12	5306-515-8064	219A	106
5306-292-8252	211	37	5306-527-4532	BULK	
5306-292-8252	213		5306-527-5906	76	114
5306-292-8252	220		5306-527-5906	KITS	
5306-292-8252	265	185	5306-531-0419	11	103
5306-292-8252	265	275	5306-531-8979	F18	22
5306-292-8252	265	4	5306-543-2545	22	58

STOCK NUMBER	FIGURE NUMBER	ITEM NUMBER	STOCK NUMBER	FIGURE NUMBER	ITEM NUMBER
5306-543-4625	BULK		5306-638-2216	BULK	
5306-543-4626	BULK		5306-638-2223	36A	38
5306-543-4628	228	129C	5306-638-2224	223	110
5306-543-4628	KITS		5306-638-2255	63	17
5306-543-4632	BULK		5306-638-4283	284	1
5306-543-4640	11	55	5306-638-4286	242	25
5306-550-0703	BULK		5306-638-4632	42B	
5306-550-1159	273	2	5306-638-4635	244	100
5306-550-1159	273	20	5306-638-4650	KITS	
5306-550-1159	273	24	5306-638-4656	BULK	
5306-550-3405	228	79	5306-638-4834	BULK	
5306-550-3408	BULK		5306-638-5303	BULK	
5306-550-9281	287	33	5306-638-5766	228	113
5306-551-5589	42B		5306-638-5775	43	13E
5306-551-5663	239	88	5306-638-5794	BULK	
5306-551-5663	KITS		5306-638-5809	BULK	
5306-551-6815	34	38	5306-638-5817	245	2D
5306-551-6822	BULK		5306-638-5828	42A	17
5306-551-6982	239	18	5306-638-5828	42C	18
5306-551-6990	239	12	5306-638-5832	BULK	
5306-551-6990	KITS		5306-638-7511	QC1	164
5306-551-6995	11B	38	5306-638-7511	BULK	
5306-551-6995	KITS		5306-638-8173	21	60
5306-558-3649	49	57B	5306-638-9033	44	25D
5306-558-3649	BULK		5306-638-9033	45	12D
5306-558-5916	BULK		5306-638-9226	62	53
5306-558-9450	BULK		5306-638-9226	QC1	15
5306-558-9455	BULK		5306-639-1456	244	121
5306-558-9466	264	10B	5306-639-1472	287	29
5306-559-8140	60	13	5306-639-1472	42B	1
5306-559-8140	100	17	5306-639-1473	284	3
5306-576-1494	42B	2	5306-639-1473	285	5
5306-576-1907	BULK		5306-639-1473	286	21
5306-576-1938	BULK		5306-639-1737	56	9
5306-576-1938	KITS		5306-639-1738	11	36
5306-576-1953	264	14B	5306-639-1738	BULK	
5306-576-5635	60		5306-639-1851	BULK	
5306-576-5635	61		5306-639-2262	286	25
5306-576-5909	42B		5306-639-2264	285	52
5306-576-5909	BULK		5306-639-2277	222	41C
5306-579-0577	287	24	5306-639-2277	242	20
5306-579-0577	42B	2	5306-639-2277	244	9
5306-579-2171	33	39	5306-639-2277	KITS	
5306-579-2171	KITS		5306-639-2278	44	12B
5306-582-6419	62	17	5306-639-2278	285	1
5306-582-6987	BULK		5306-639-2278	287	25
5306-582-8786	60	35	5306-639-2278	KITS	
5306-582-8849	BULK		5306-639-2280	42B	
5306-582-8935	BULK		5306-639-2289	287	26
5306-582-9588	BULK		5306-639-2302	239	133
5306-582-9593	263	2	5306-639-2314	BULK	
5306-584-4936	49	48A	5306-639-2314	KITS	
5306-584-5034	BULK		5306-639-2318	239	5
5306-584-5473	240	73	5306-639-2318	239	87
5306-584-6715	BULK		5306-639-2318	KITS	
5306-584-7567	45	8C	5306-639-2326	21	25
5306-584-7567	KITS		5306-639-2332	BULK	
5306-584-7568	BULK		5306-639-2333	238	36
5306-584-8937	KITS		5306-639-2384	BULK	
5306-613-5504	109	77A	5306-639-2395	45	16
5306-616-1272	240	35	5306-639-2395	KITS	
5306-616-2618	11	12B	5306-639-2437	BULK	
5306-616-2618	KITS		5306-639-2458	238	6
5306-616-8709	273	5	5306-639-2474	QC1	19
5306-619-1807	BULK		5306-639-2474	BULK	
5306-630-2089	BULK		5306-639-2474	KITS	
5306-637-8591	BULK		5306-639-2515	BULK	
5306-637-8723	219A	139	5306-639-2780	45	11
5306-637-8723	219A	27	5306-639-5993	KITS	
5306-638-2214	62		5306-639-7587	11	27
5306-638-2214	KITS		5306-656-0358	76	179B

STOCK NUMBER	FIGURE NUMBER	ITEM NUMBER	STOCK NUMBER	FIGURE NUMBER	ITEM NUMBER
5306-656-0358	88	24C	5306-805-3573	BULK	
5306-656-0358	95	167	5306-807-2952	11B	7
5306-656-0358	37A	27	5306-807-2952	BULK	
5306-656-0358	KITS		5306-807-6900	134	13
5306-660-2378	BULK		5306-808-1221	BULK	
5306-680-6308	81	183	5306-808-2857	BULK	
5306-680-6779	95	11	5306-809-1431	134	1
5306-680-6779	F16	30	5306-809-1431	134	52
5306-680-6779	280	13	5306-809-7406	BULK	
5306-680-6900	228	61	5306-809-7476	134	40
5306-680-6900	229	35	5306-812-7007	75	115
5306-680-7393	11	84D	5306-812-8637	KITS	
5306-685-2636	BULK		5306-813-8090	BULK	
5306-685-3027	36A	41	5306-814-3878	75	117
5306-685-3027	36B	31	5306-814-5532	KITS	
5306-685-3027	KITS		5306-814-5533	BULK	
5306-685-3436	62	6C	5306-814-8786	25	23
5306-687-6139	BULK		5306-814-8786	KITS	
5306-687-7570	BULK		5306-814-9939	BULK	
5306-687-7707	11B	123	5306-815-4191	76	165A
5306-687-7707	240	1	5306-815-4191	81	183
5306-687-7710	BULK		5306-815-4191	83	316
5306-687-7711	BULK		5306-815-6393	11B	8
5306-688-1961	BULK		5306-816-0942	BULK	
5306-701-0332	BULK		5306-816-3222	11	34
5306-702-3249	11	13	5306-816-3223	11	27
5306-715-0566	88	84C	5306-816-3684	BULK	
5306-715-0566	95		5306-816-3685	11	80
5306-715-0566	95	11	5306-816-5461	11	75
5306-715-0566	257	2B	5306-817-5983	42B	73
5306-716-3511	133	14	5306-818-3079	34	50
5306-720-7669	11	133B	5306-818-3079	BULK	
5306-721-4520	81	16	5306-819-8895	81	142
5306-721-4520	91	5	5306-819-8895	83	286
5306-721-4984	42A	4	5306-819-9674	270	30
5306-721-7527	BULK		5306-822-2024	BULK	
5306-722-0393	F16	48	5306-825-3815	140	18
5306-722-0393	F16	5	5306-825-3815	142	9
5306-722-0393	221	111	5306-827-6088	28	24M
5306-722-0393	270	62A	5306-827-9489	11B	9
5306-722-0393	37A	94	5306-827-9492	11B	12C
5306-722-0393	KITS		5306-832-6813	222	172
5306-722-8759	KITS		5306-832-6813	222	91
5306-723-3947	11	95	5306-832-6813	244	62
5306-723-4807	F15	48	5306-832-6814	222	95
5306-725-3079	BULK		5306-832-6814	244	67
5306-725-9749	228	104	5306-832-6815	222	45
5306-725-9749	KITS		5306-832-6815	244	35
5306-726-9154	BULK		5306-832-6816	222	46
5306-727-0033	BULK		5306-832-6816	244	40
5306-727-0786	22	32	5306-832-6817	222	208
5306-727-2120	BULK		5306-832-6817	222	81
5306-730-2629	265	250	5306-832-6818	222	158
5306-754-1763	BULK		5306-832-6818	222	53
5306-754-1787	76	175	5306-832-6818	244	47
5306-754-1787	83	104	5306-832-6819	222	197
5306-754-1788	83	21A	5306-832-6819	222	77
5306-754-1788	210	4	5306-832-6819	244	90
5306-754-1788	KITS		5306-832-6820	244	79
5306-754-1791	BULK		5306-832-6821	222	58
5306-754-3048	280	6	5306-832-6821	244	56
5306-754-3049	BULK		5306-832-6822	72	1
5306-759-9944	51	2	5306-832-6823	75	47
5306-775-2481	134	39	5306-832-6823	KITS	
5306-781-5645	BULK		5306-832-6824	222	163
5306-781-7044	222	116	5306-832-6824	222	177
5306-781-7044	237	34	5306-832-6824	222	58
5306-781-7044	KITS		5306-832-6824	222	95
5306-795-9398	A51		5306-832-6824	244	56
5306-803-7374	11B		5306-832-6824	244	67
5306-803-7375	BULK		5306-832-6825	222	198

STOCK NUMBER	FIGURE NUMBER	ITEM NUMBER	STOCK NUMBER	FIGURE NUMBER	ITEM NUMBER
5306-832-6825	222	209	5306-891-1449	75	17
5306-832-6825	222	78	5306-891-4726	75	163
5306-832-6825	222	82	5306-891-8450	135	10
5306-832-6825	244	52	5306-893-6009	BULK	
5306-832-6825	244	62	5306-893-9848	BULK	
5306-832-6825	244	84	5306-893-9850	BULK	
5306-832-6825	244	95	5306-900-3841	76	1
5306-832-6826	KITS		5306-900-8212	49	28
5306-832-6827	75	66	5306-900-8697	49	40
5306-832-6828	75	55	5306-901-0042	45	28
5306-832-6829	75	17	5306-902-0916	45	
5306-832-6829	75	18	5306-903-7297	81	98
5306-832-6830	71	131	5306-904-9954	37	41
5306-834-4306	KITS		5306-904-9954	KITS	
5306-835-7477	25	11	5306-904-9955	37	40
5306-835-9952	76	58A	5306-904-9955	KITS	
5306-843-7117	71	105	5306-905-2981	11	75
5306-843-9964	F19	3	5306-914-4131	207	16
5306-843-9964	210	7	5306-914-4131	208	18
5306-851-4062	11	28	5306-917-3846	134	42
5306-851-4062	11B	123	5306-924-6260	83	249
5306-851-5166	BULK		5306-924-6261	83	279
5306-851-5709	72	41	5306-924-6262	83	247
5306-851-5709	72	73	5306-924-6263	81	97
5306-855-1172	BULK		5306-926-5602	BULK	
5306-855-3610	42B	53	5306-926-5603	71	121
5306-856-9714	59	1A	5306-926-5603	KITS	
5306-859-6147	81	1	5306-926-5684	71	49A
5306-859-6147	KITS		5306-931-8626	71	122
5306-859-6149	92	11	5306-931-8626	KITS	
5306-859-6149	92	25	5306-936-2997	51	75
5306-859-6149	92	49	5306-936-9546	11	81
5306-859-6149	92	66	5306-938-3218	11	40
5306-859-6149	92	96	5306-938-3218	11	91
5306-859-6149	KITS		5306-944-1048	BULK	
5306-863-1208	93	2	5306-946-0217	BULK	
5306-863-1208	93	5	5306-946-0410	270	50
5306-863-1220	90	3	5306-946-4875	BULK	
5306-863-1220	KITS		5306-946-7883	83	244
5306-863-1221	90	11	5306-946-7887	270	54
5306-863-1221	90	11A	5306-946-7888	34	28
5306-863-1228	83	1	5306-946-7889	KITS	
5306-863-1228	KITS		5306-947-3193	238	54
5306-865-5519	59	25	5306-947-3197	270	33
5306-865-8299	44	18C	5306-947-3548	270	11
5306-865-9807	269	8C	5306-947-3548	270	20
5306-865-9811	269	17	5306-947-3549	270	23
5306-865-9811	270	61H	5306-947-3550	270	13
5306-866-1465	270	12	5306-947-3551	270	36
5306-868-4847	63	70	5306-947-3551	270	39
5306-869-4269	BULK		5306-948-3241	269	15B
5306-875-9987	75	18	5306-949-5483	270	45
5306-877-6434	76	130	5306-950-0125	BULK	
5306-877-6434	92	100	5306-951-0776	BULK	
5306-877-6434	92	100A	5306-952-1695	25	29
5306-877-6434	92	14C	5306-954-4242	244	132
5306-877-6434	92	15B	5306-954-4243	238	37
5306-877-6434	92	56	5306-954-4243	KITS	
5306-877-6434	92	56A	5306-954-4244	238	45
5306-877-6434	92	72	5306-954-6842	62	20
5306-877-6434	92	72A	5306-954-6842	QC1	186
5306-877-6435	21	26A	5306-954-9036	43	8
5306-878-0330	49	50C	5306-954-9037	43	9
5306-878-5752	51	1	5306-956-9980	83	246
5306-880-2602	45	9	5306-957-2294	44	1
5306-880-2607	45	14	5306-957-2294	45	6A
5306-886-1431	49	33	5306-957-2295	BULK	
5306-886-1431	51	25	5306-957-2296	25	24
5306-887-1470	59	21	5306-957-2296	25	28
5306-889-3170	71	90	5306-964-3891	22	43
5306-889-3170	KITS		5306-975-2213	BULK	

STOCK NUMBER	FIGURE NUMBER	ITEM NUMBER	STOCK NUMBER	FIGURE NUMBER	ITEM NUMBER
5306-977-9332	11	45	5307-637-9960	75	183
5306-977-9344	11	46	5307-677-1839	265	299
5306-993-0500	BULK		5307-677-1839	268	30A
5306-993-1445	KITS		5307-706-8765	75	145
5307-016-0424	72	16	5307-706-8765	75	158
5307-017-8733	76	31A	5307-706-8765	75	182
5307-050-6190	177	50	5307-706-8783	76	142F
5307-053-1610	176	19	5307-706-8783	89	36
5307-053-1610	177	18	5307-706-8795	75	144
5307-075-5127	89	127B	5307-706-8795	75	157
5307-078-0341	80	19B	5307-739-5544	71	49
5307-078-0341	89	127A	5307-753-4400	37	18
5307-078-0342	80	19B	5307-753-4404	37	17
5307-078-0342	89	127A	5307-796-4819	81	203
5307-078-0348	88	33B	5307-805-9364	88	93
5307-081-1036	210	88	5307-814-7824	76	50
5307-134-4109	83		5307-814-7824	83	
5307-134-4109	83	177	5307-824-6280	89	127B
5307-134-4110	83	134	5307-853-9408	76	51
5307-134-4110	87	28	5307-853-9408	80	21A
5307-134-4111	87	26	5307-856-7559	102	16
5307-134-4112	81	204	5307-856-7559	103	17A
5307-134-4112	83		5307-870-1101	176	44
5307-134-4113	81	65	5307-883-1902	75	144
5307-134-4113	83	305	5307-885-1411	BULK	
5307-134-4114	83	175	5307-891-4660	70	13
5307-134-4121	87	29	5307-902-1496	91	13
5307-134-4122	81	119	5307-905-5115	24	
5307-151-5524	87	27A	5307-919-2612	204A	143
5307-177-7699	81	200	5307-921-3784	81	207
5307-177-7700	81	121	5307-921-3784	83	362
5307-177-7700	81	201	5307-921-3785	81	203
5307-177-7701	83	208	5307-921-3785	89	35
5307-177-7702	80	17A	5307-921-3785	89	82
5307-177-7702	83		5307-929-0056	76	50
5307-177-7702	83	98	5307-933-4076	154	38
5307-177-7703	83		5307-936-9668	83	175
5307-177-7704	87	27A	5307-936-9669	83	355
5307-177-7705	83		5307-936-9670	76	32
5307-206-2950	75	133	5307-936-9670	87	29
5307-206-6444	76	31A	5307-936-9671	87	30A
5307-206-9388	75	143	5307-936-9672	81	206
5307-207-1975	89	126	5307-936-9673	81	119
5307-208-0265	89	127	5307-936-9674	87	27A
5307-230-0440	70	13	5307-936-9675	BULK	
5307-276-2622	75	133	5307-936-9676	81	202
5307-281-2618	80	21	5307-948-0629	76	51
5307-285-3922	BULK		5307-948-7353	87	26
5307-292-5149	89	125	5307-949-8204	81	200
5307-292-5197	75	145	5307-949-8204	88	60
5307-350-4377	76	31B	5307-949-8205	80	18A
5307-439-7835	186A	2	5307-949-8205	80	21
5307-458-2351	87	30A	5307-949-8205	81	121
5307-458-2352	87	31	5307-949-8205	81	201
5307-461-4334	64A	27	5307-949-8206	76	31A
5307-490-4765	83	176	5307-949-8206	83	357
5307-531-9589	76	50	5307-949-8207	80	17A
5307-576-8020	76	51	5307-949-8207	83	351
5307-576-8020	89	83	5307-949-8207	83	361
5307-579-0954	76	31A	5307-949-8207	83	98
5307-579-0954	80	17A	5307-949-8207	87	31
5307-579-0954	80	18A	5307-949-8208	76	50
5307-579-0954	80	20	5307-949-8208	83	354
5307-625-9942	83	100	5307-949-8209	76	31B
5307-625-9942	83	358	5307-949-8210	80	6A
5307-625-9942	83	99	5307-949-8211	71	17
5307-625-9942	88	32	5307-949-8212	88	89
5307-625-9942	91	12	5307-949-8215	76	49
5307-637-1612	80	21	5307-949-8215	80	19A
5307-637-9960	75	143	5307-949-8215	81	205
5307-637-9960	75	159	5307-949-8215	83	177

STOCK NUMBER	FIGURE NUMBER	ITEM NUMBER	STOCK NUMBER	FIGURE NUMBER	ITEM NUMBER
5307-949-8215	83	359	5310-045-3296	188	52B
5307-949-8215	87	32	5310-045-3296	190	47
5307-949-8215	88	97	5310-045-3296	191	15
5307-949-8216	76	140	5310-045-3296	193	63
5307-949-8216	81	204	5310-045-3296	195	12
5307-949-8216	83	174	5310-045-3296	195	46
5307-949-8217	76	58	5310-045-3296	196	
5307-949-8217	88	100	5310-045-3296	196	14
5307-949-8218	80	7A	5310-045-3296	204	6
5307-949-8218	81	65	5310-045-3296	205	7A
5307-949-8218	83	139	5310-045-3296	209	
5307-949-8218	83	305	5310-045-3296	210	90
5307-949-8225	76	51	5310-045-3296	213	
5307-954-7222	81	203	5310-045-3296	225	9
5307-954-7222	83	101	5310-045-3296	270	16C
5307-954-7222	83	207	5310-045-3296	270	62B
5307-977-1754	83	208	5310-045-3296	278	
5307-977-1761	83	134	5310-045-3296	281	
5307-977-1761	87	28	5310-045-3296	KITS	
5307-977-1766	81	80A	5310-045-3296	189A	20
5307-977-1766	83	176	5310-045-3299	30	40
5307-979-4536	204A	138	5310-045-3299	83	35E
5307-982-0413	83	257	5310-045-3299	QC1	
5307-984-5498	83	256	5310-045-3299	167	12
5307-996-4436	204A	142	5310-045-3299	190	22
5307-996-4438	204A	144	5310-045-3299	210	71
5307-997-9050	89	125	5310-045-3299	228	
5310-004-5118	75	63	5310-045-3945	BULK	
5310-004-5118	223	54	5310-045-4007	83	35I
5310-004-5118	242	8	5310-045-4007	167	6
5310-004-5118	243	9B	5310-045-4007	182	
5310-009-7663	243	15B	5310-045-4007	189	8
5310-009-7663	243	22B	5310-045-4007	190	137
5310-010-8613	63	30	5310-045-4007	190	27
5310-012-3959	BULK		5310-045-4007	190	36
5310-012-9413	232	11	5310-045-4007	190	63
5310-015-3048	190		5310-045-4007	190	68
5310-016-5012	216	16	5310-045-4007	190	83
5310-016-6108	193	6A	5310-045-4007	191	23
5310-016-7194	262	36	5310-045-4007	193	41
5310-016-7194	262	48	5310-045-4007	194	18
5310-016-7216	263	5	5310-045-4007	194	227
5310-016-8600	204A	146	5310-045-4007	194	3
5310-019-5865	193	28B	5310-045-4007	194	39
5310-019-5865	193	28E	5310-045-4007	195	21
5310-019-5865	193	78	5310-045-4007	196	41
5310-019-5865	193	83	5310-045-4007	202	32
5310-019-5865	194	5	5310-045-4007	204	
5310-019-5866	193	57	5310-045-4007	205	15A
5310-019-5868	193	43	5310-045-4007	205	4A
5310-021-2764	BULK		5310-045-4007	210	35
5310-021-2767	248		5310-045-4007	226	37
5310-021-2768	239	21	5310-045-4007	232	40
5310-021-7088	BULK		5310-045-4007	232	6
5310-025-7729	83	35L	5310-045-4007	233	19
5310-025-8009	170	52	5310-045-4007	275	
5310-025-8009	171	52	5310-045-4007	KITS	
5310-027-7247	204A	15	5310-045-4007	182A	40
5310-033-7081	70	4	5310-045-4007	189A	28
5310-033-7081	229	18	5310-045-5204	100	24
5310-033-7081	KITS		5310-045-5269	71	126
5310-034-6656	BULK		5310-051-9755	138	67
5310-034-6659	194	47	5310-051-9788	274	25
5310-034-6659	194	9	5310-052-1555	21	70
5310-039-5369	215	56	5310-052-4409	76	165B
5310-043-3953	197	27	5310-052-4410	76	165
5310-044-2241	BULK		5310-052-4411	81	149C
5310-044-2358	BULK		5310-052-4425	89	105
5310-045-3296	28		5310-052-4426	81	149B
5310-045-3296	94	12A	5310-052-4427	89	103
5310-045-3296	188		5310-054-4963	192	

STOCK NUMBER	FIGURE NUMBER	ITEM NUMBER
5310-054-8665	134	21
5310-054-8665	134	30
5310-055-5014	82	7
5310-058-1823	268	58
5310-059-0849	190	
5310-059-2402	BULK	
5310-059-6623	11	78
5310-059-6623	240	3
5310-059-9264	BULK	
5310-060-2040	BULK	
5310-061-7325	37	1
5310-061-7325	37	35A
5310-061-7325	71	113
5310-061-7325	71	138
5310-061-7325	76	118A
5310-061-7325	76	120
5310-061-7325	76	122
5310-061-7325	76	126B
5310-061-7325	76	134
5310-061-7325	76	156
5310-061-7325	76	2
5310-061-7325	76	56
5310-061-7325	76	59
5310-061-7325	76	78
5310-061-7325	76	8A
5310-061-7325	76	81
5310-061-7325	81	149A
5310-061-7325	81	165
5310-061-7325	81	18
5310-061-7325	81	187
5310-061-7325	81	22
5310-061-7325	81	28
5310-061-7325	81	35
5310-061-7325	81	38
5310-061-7325	81	41
5310-061-7325	81	57
5310-061-7325	81	74
5310-061-7325	81	82
5310-061-7325	83	114
5310-061-7325	83	132
5310-061-7325	83	137
5310-061-7325	83	153
5310-061-7325	83	186
5310-061-7325	83	218
5310-061-7325	83	233
5310-061-7325	83	297
5310-061-7325	83	371
5310-061-7325	88	24
5310-061-7325	88	27
5310-061-7325	88	3
5310-061-7325	88	56
5310-061-7325	89	25
5310-061-7325	89	94
5310-061-7325	89	98
5310-061-7325	135	17
5310-061-7325	37A	103
5310-061-7325	37A	15
5310-061-7325	37A	47
5310-061-7325	37A	62
5310-061-7325	37A	69
5310-061-7325	37A	93
5310-061-7326	62	7H
5310-061-7326	76	
5310-061-7326	76	102
5310-061-7326	76	11A
5310-061-7326	76	12A
5310-061-7326	76	146A
5310-061-7326	76	169
5310-061-7326	76	39
5310-061-7326	81	49
5310-061-7326	81	5
5310-061-7326	81	8
5310-061-7326	81	9
5310-061-7326	83	106
5310-061-7326	83	127
5310-061-7326	83	15
5310-061-7326	83	150
5310-061-7326	83	162
5310-061-7326	83	29
5310-061-7326	83	39
5310-061-7326	83	48
5310-061-7326	83	55
5310-061-7326	83	6
5310-061-7326	83	74
5310-061-7326	88	18
5310-061-7326	88	24F
5310-061-7326	88	46C
5310-061-7326	89	18
5310-061-7326	89	39
5310-061-7326	89	43
5310-061-7326	89	89
5310-061-7326	204	1A
5310-061-7326	249	27
5310-061-7326	262	34
5310-061-7326	262	47
5310-061-7326	37A	31
5310-061-7326	37A	96
5310-062-4954	62	6A
5310-062-4954	KITS	
5310-062-6641	BULK	
5310-063-1617	31	
5310-063-2518	BULK	
5310-063-5997	20	
5310-063-5999	BULK	
5310-064-1827	17	
5310-064-1827	91	8C
5310-064-1827	229	29
5310-064-1849	BULK	
5310-066-4289	228	56
5310-066-4289	245	2
5310-066-4289	245	21B
5310-066-4289	246	8
5310-067-6535	81	100
5310-067-6535	83	252
5310-067-7761	76	38
5310-067-7761	81	78
5310-073-6601	102	56
5310-075-2515	233	15
5310-075-2603	253	30D
5310-079-1967	139	118
5310-080-3395	210	39
5310-080-6004	KITS	
5310-080-9661	149	26
5310-080-9663	149	40
5310-081-7048	51	10
5310-081-8087	188	
5310-081-8087	188	15
5310-081-8087	189	9
5310-081-8087	190	46
5310-081-8087	197	17
5310-081-8087	204	
5310-081-8087	275	
5310-081-8087	275	29
5310-081-8087	189A	12
5310-081-8087	189A	15
5310-081-8087	189A	25
5310-083-8365	62	54
5310-083-8365	QC1	16
5310-083-8365	KITS	
5310-084-9335	223	
5310-085-7606	224	3
5310-088-0551	33	34E

STOCK NUMBER	FIGURE NUMBER	ITEM NUMBER
5310-088-0551	42	
5310-088-0551	62	
5310-088-0551	62	75
5310-088-0551	76	112A
5310-088-0551	QC1	
5310-088-0551	157	80
5310-088-0551	158	72
5310-088-0551	182	
5310-088-0551	183	15
5310-088-0551	183	38
5310-088-0551	183	45
5310-088-0551	188	
5310-088-0551	188	
5310-088-0551	188	10
5310-088-0551	189	3
5310-088-0551	189	5
5310-088-0551	190	89
5310-088-0551	191	33
5310-088-0551	192	
5310-088-0551	192	10
5310-088-0551	192	29
5310-088-0551	193	28C
5310-088-0551	194	56
5310-088-0551	195	33E
5310-088-0551	198	
5310-088-0551	202	27
5310-088-0551	202	29
5310-088-0551	202	34
5310-088-0551	204	
5310-088-0551	204	
5310-088-0551	204	13A
5310-088-0551	204	8
5310-088-0551	230	48
5310-088-0551	230	74
5310-088-0551	231	116
5310-088-0551	231	118
5310-088-0551	248	79
5310-088-0551	248	8
5310-088-0551	248	91
5310-088-0551	262	18
5310-088-0551	265	172
5310-088-0551	268	135
5310-088-0551	268	149B
5310-088-0551	275	
5310-088-0551	277	
5310-088-0551	KITS	
5310-088-0551	182A	33
5310-088-0551	182A	36
5310-088-0551	189A	18
5310-088-0551	189A	9
5310-088-0552	11	22
5310-088-0552	60	34
5310-088-0552	61	36
5310-088-0553	11	48
5310-088-0553	21	26C
5310-088-0553	60	1
5310-088-0553	61	5
5310-088-0553	238	8
5310-088-0553	KITS	
5310-088-9950	20	74
5310-088-9950	28	
5310-088-9950	28	
5310-088-9950	28	
5310-088-9950	KITS	
5310-089-5059	169	61
5310-089-5060	169	48
5310-089-5060	173	45
5310-104-2589	50	4
5310-105-4215	BULK	
5310-105-8375	42B	84
5310-106-0075	90	1
5310-106-0075	90	9
5310-106-0075	90	9A
5310-106-0075	KITS	
5310-110-2760	210	46
5310-121-1103	42B	63
5310-123-0734	244	
5310-124-3220	65	14
5310-124-3220	65	2
5310-124-3220	65	5
5310-124-3280	67	35
5310-124-9229	BULK	
5310-126-5118	67	30
5310-134-3936	221A	
5310-134-3937	221A	
5310-134-4174	A51	
5310-135-4638	96	6
5310-141-1795	15	8D
5310-141-1795	24	
5310-141-1795	25	16C
5310-141-1795	37	1
5310-141-1795	37	14
5310-141-1795	37	35B
5310-141-1795	44	12A
5310-141-1795	62	
5310-141-1795	66	14
5310-141-1795	66	15
5310-141-1795	66	3
5310-141-1795	66	4
5310-141-1795	75	116
5310-141-1795	75	118
5310-141-1795	76	119
5310-141-1795	76	120A
5310-141-1795	76	123
5310-141-1795	76	126C
5310-141-1795	76	135
5310-141-1795	76	157
5310-141-1795	76	2A
5310-141-1795	76	38A
5310-141-1795	76	57
5310-141-1795	76	60
5310-141-1795	76	79
5310-141-1795	76	8B
5310-141-1795	76	82
5310-141-1795	81	149B
5310-141-1795	81	149C
5310-141-1795	81	152
5310-141-1795	81	16A
5310-141-1795	81	165A
5310-141-1795	81	175A
5310-141-1795	81	18A
5310-141-1795	81	187A
5310-141-1795	81	23
5310-141-1795	81	29
5310-141-1795	81	36
5310-141-1795	81	39
5310-141-1795	81	42
5310-141-1795	81	58
5310-141-1795	81	75
5310-141-1795	81	79
5310-141-1795	81	83
5310-141-1795	83	115
5310-141-1795	83	120
5310-141-1795	83	133
5310-141-1795	83	138
5310-141-1795	83	154
5310-141-1795	83	187
5310-141-1795	83	218
5310-141-1795	83	219
5310-141-1795	83	234
5310-141-1795	83	298
5310-141-1795	83	324

STOCK NUMBER	FIGURE NUMBER	ITEM NUMBER
5310-141-1795	83	372
5310-141-1795	83	62
5310-141-1795	88	24A
5310-141-1795	88	28
5310-141-1795	88	3A
5310-141-1795	88	50
5310-141-1795	88	57
5310-141-1795	89	3
5310-141-1795	89	99
5310-141-1795	91	6
5310-141-1795	91	8
5310-141-1795	92	31
5310-141-1795	92	85
5310-141-1795	95	
5310-141-1795	95	113B
5310-141-1795	95	157
5310-141-1795	95	160
5310-141-1795	95	178B
5310-141-1795	95	38B
5310-141-1795	F15	22
5310-141-1795	F17	11
5310-141-1795	F17	18
5310-141-1795	F17	22
5310-141-1795	F17	4
5310-141-1795	102	7E
5310-141-1795	103	6C
5310-141-1795	118	
5310-141-1795	118	3
5310-141-1795	135	16
5310-141-1795	149	19
5310-141-1795	222	
5310-141-1795	222	138
5310-141-1795	222	14
5310-141-1795	222	145
5310-141-1795	222	3
5310-141-1795	222	36
5310-141-1795	223	137
5310-141-1795	223	16
5310-141-1795	223	23
5310-141-1795	223	3
5310-141-1795	223	31
5310-141-1795	223	40
5310-141-1795	223	41
5310-141-1795	223	79
5310-141-1795	223	90
5310-141-1795	226	14
5310-141-1795	226	26
5310-141-1795	226	4
5310-141-1795	228	114
5310-141-1795	228	120
5310-141-1795	228	127D
5310-141-1795	228	13
5310-141-1795	228	160
5310-141-1795	228	175
5310-141-1795	228	186
5310-141-1795	228	35
5310-141-1795	228	43
5310-141-1795	228	49
5310-141-1795	228	5
5310-141-1795	228	63
5310-141-1795	228	73
5310-141-1795	228	97
5310-141-1795	229	23
5310-141-1795	229	34
5310-141-1795	235	5
5310-141-1795	235	9
5310-141-1795	237	22
5310-141-1795	237	50
5310-141-1795	239	116
5310-141-1795	239	130
5310-141-1795	239	96
5310-141-1795	240	19
5310-141-1795	240	27
5310-141-1795	242	11
5310-141-1795	244	17
5310-141-1795	244	18
5310-141-1795	244	26
5310-141-1795	244	27
5310-141-1795	245	18B
5310-141-1795	246	3A
5310-141-1795	262	2
5310-141-1795	265	249
5310-141-1795	265	303
5310-141-1795	268	264
5310-141-1795	273	17A
5310-141-1795	280	2
5310-141-1795	281	
5310-141-1795	37A	46
5310-141-1795	37A	62
5310-141-1795	37A	92
5310-141-1795	42A	10
5310-141-1795	42A	14
5310-141-1795	42B	9
5310-141-1795	42C	11
5310-141-1795	42C	15
5310-141-1795	KITS	
5310-141-3009	42B	38
5310-141-3010	228	127C
5310-145-1782	229	44
5310-145-1782	42B	24
5310-148-8881	215	6
5310-149-9116	11	82
5310-149-9116	75	19
5310-149-9116	75	48
5310-149-9116	76	18
5310-149-9116	81	99A
5310-149-9116	83	245
5310-149-9116	83	248
5310-149-9116	83	250
5310-149-9116	222	159
5310-149-9116	222	164
5310-149-9116	222	178
5310-149-9116	222	196
5310-149-9116	222	207
5310-149-9116	222	54
5310-149-9116	222	59
5310-149-9116	222	73
5310-149-9116	222	83
5310-149-9116	222	96
5310-149-9116	240	6
5310-149-9116	244	48
5310-149-9116	244	53
5310-149-9116	244	57
5310-149-9116	244	63
5310-149-9116	244	68
5310-149-9116	244	80
5310-149-9116	244	85
5310-149-9116	244	91
5310-149-9116	244	96
5310-149-9116	KITS	
5310-149-9119	11	76
5310-149-9119	72	4
5310-149-9119	72	42
5310-149-9119	72	74
5310-149-9119	75	48
5310-149-9119	11B	
5310-149-9119	KITS	
5310-149-9120	91	4
5310-149-9120	F14	8
5310-149-9120	F16	27
5310-149-9120	269	6C
5310-149-9120	KITS	

STOCK NUMBER	FIGURE NUMBER	ITEM NUMBER
5310-149-9123	81	4
5310-149-9123	83	2
5310-149-9123	244	74
5310-149-9123	KITS	
5310-149-9126	BULK	
5310-149-9127	45	
5310-149-9130	11	25
5310-149-9130	50	5
5310-149-9130	75	16
5310-149-9130	75	65
5310-149-9130	76	165
5310-149-9130	81	182B
5310-149-9130	83	319
5310-149-9130	11C	49
5310-149-9143	43	4
5310-149-9146	11	33
5310-149-9146	11	56
5310-149-9146	50	7
5310-149-9146	75	164
5310-149-9146	75	19
5310-149-9146	75	56
5310-149-9146	75	65
5310-149-9146	75	68
5310-149-9146	76	165B
5310-149-9146	81	183A
5310-149-9146	83	317
5310-149-9146	11C	48
5310-149-9146	222	173
5310-149-9146	222	92
5310-149-9146	222	96
5310-149-9146	244	63
5310-149-9146	244	68
5310-149-9146	KITS	
5310-150-4113	76	165
5310-150-4208	76	165B
5310-150-4208	81	183A
5310-150-4208	83	317
5310-151-5430	223	147
5310-151-5430	223	189
5310-151-5430	223	204
5310-151-5430	223	75
5310-151-5430	242	5
5310-151-5430	242	6
5310-151-5430	243	4B
5310-151-5431	66	13
5310-151-5431	66	2
5310-151-5431	222	14
5310-151-5431	222	19B
5310-151-5431	223	136
5310-151-5431	223	15
5310-151-5431	223	2
5310-151-5431	223	22
5310-151-5431	223	30
5310-151-5431	223	9
5310-151-5431	228	129B
5310-158-4422	183A	73
5310-158-4440	183A	80
5310-158-4445	183A	37
5310-158-4528	67A	13
5310-159-6364	194	16
5310-159-6367	194	51
5310-159-6379	194	72
5310-167-0657	76	179I
5310-167-0657	81	130A
5310-167-0657	83	376
5310-167-0657	89	129A
5310-167-0657	193	50
5310-167-0657	231	111
5310-167-0680	BULK	
5310-167-0685	20	41
5310-167-0685	20	81
5310-167-0685	20	94
5310-167-0685	253	44B
5310-167-0685	255	4B
5310-167-0685	256	14
5310-167-0685	428	18
5310-167-0699	100	24
5310-167-0721	BULK	
5310-167-0725	BULK	
5310-167-0751	F20	10
5310-167-0751	QC1	19A
5310-167-0751	222	60
5310-167-0751	222	97
5310-167-0751	244	
5310-167-0751	244	69
5310-167-0751	257	16B
5310-167-0751	257	18B
5310-167-0751	257	5B
5310-167-0751	257	7B
5310-167-0751	257	9B
5310-167-0751	264	14A
5310-167-0753	10	
5310-167-0753	10	
5310-167-0753	11	39
5310-167-0753	11	61B
5310-167-0753	11	99
5310-167-0753	13	16
5310-167-0753	13	37
5310-167-0753	13	61
5310-167-0753	13	94
5310-167-0753	13	97
5310-167-0753	15	3B
5310-167-0753	16	50
5310-167-0753	18	
5310-167-0753	18	
5310-167-0753	18	30
5310-167-0753	18	80
5310-167-0753	19	9
5310-167-0753	20	
5310-167-0753	20	10
5310-167-0753	20	19
5310-167-0753	20	31
5310-167-0753	20	36
5310-167-0753	20	57
5310-167-0753	20	6
5310-167-0753	20	72
5310-167-0753	22	
5310-167-0753	25	8A
5310-167-0753	28	
5310-167-0753	28	14E
5310-167-0753	28	33
5310-167-0753	31	
5310-167-0753	32	
5310-167-0753	32	
5310-167-0753	32	
5310-167-0753	32	23
5310-167-0753	32	36
5310-167-0753	32	41
5310-167-0753	32	53
5310-167-0753	32	78
5310-167-0753	33	23B
5310-167-0753	33	38
5310-167-0753	34	
5310-167-0753	34	
5310-167-0753	36	
5310-167-0753	42	
5310-167-0753	42	9B
5310-167-0753	51	38A
5310-167-0753	53	31A
5310-167-0753	54	14
5310-167-0753	62	
5310-167-0753	62	38

STOCK NUMBER	FIGURE NUMBER	ITEM NUMBER
5310-167-0753	62	80
5310-167-0753	66	34
5310-167-0753	66	37
5310-167-0753	71	2
5310-167-0753	71	21B
5310-167-0753	71	52
5310-167-0753	75	7
5310-167-0753	88	84E
5310-167-0753	95	100
5310-167-0753	95	110
5310-167-0753	95	123
5310-167-0753	95	13
5310-167-0753	95	138
5310-167-0753	95	150
5310-167-0753	95	161
5310-167-0753	95	163
5310-167-0753	95	40
5310-167-0753	95	41
5310-167-0753	95	42
5310-167-0753	95	43
5310-167-0753	95	49
5310-167-0753	95	52
5310-167-0753	95	57
5310-167-0753	95	7
5310-167-0753	95	71
5310-167-0753	95	82
5310-167-0753	95	84
5310-167-0753	95	88
5310-167-0753	95	90
5310-167-0753	95	99
5310-167-0753	F16	31
5310-167-0753	F16	49
5310-167-0753	F16	6
5310-167-0753	QC1	
5310-167-0753	QC1	44
5310-167-0753	QC1	52A
5310-167-0753	109	
5310-167-0753	11A	18B
5310-167-0753	110	36A
5310-167-0753	110	37A
5310-167-0753	110	40A
5310-167-0753	110	46A
5310-167-0753	110	54
5310-167-0753	110	57
5310-167-0753	110	58
5310-167-0753	110	63
5310-167-0753	110	66
5310-167-0753	110	67
5310-167-0753	110	74
5310-167-0753	110	75
5310-167-0753	112	10
5310-167-0753	112	105
5310-167-0753	112	106
5310-167-0753	112	108
5310-167-0753	112	109
5310-167-0753	112	110
5310-167-0753	112	113
5310-167-0753	112	116
5310-167-0753	112	20
5310-167-0753	112	26
5310-167-0753	112	27
5310-167-0753	112	28
5310-167-0753	112	37
5310-167-0753	112	4
5310-167-0753	112	41
5310-167-0753	112	45
5310-167-0753	112	47
5310-167-0753	112	5
5310-167-0753	112	50
5310-167-0753	112	53
5310-167-0753	112	57
5310-167-0753	112	61
5310-167-0753	112	63
5310-167-0753	112	69
5310-167-0753	112	79
5310-167-0753	112	9
5310-167-0753	112	91
5310-167-0753	115	
5310-167-0753	116	
5310-167-0753	117	
5310-167-0753	119	
5310-167-0753	119	256
5310-167-0753	129	
5310-167-0753	129	22B
5310-167-0753	139	
5310-167-0753	139	100
5310-167-0753	139	102
5310-167-0753	139	104
5310-167-0753	139	107
5310-167-0753	139	110
5310-167-0753	139	112
5310-167-0753	139	114
5310-167-0753	139	115
5310-167-0753	139	116
5310-167-0753	143	
5310-167-0753	151	2
5310-167-0753	178	106
5310-167-0753	178	126
5310-167-0753	178	147
5310-167-0753	179	46
5310-167-0753	182	
5310-167-0753	188	
5310-167-0753	188	19A
5310-167-0753	188	4
5310-167-0753	188	42
5310-167-0753	188	49C
5310-167-0753	188	60
5310-167-0753	191	2
5310-167-0753	191	35
5310-167-0753	191	39
5310-167-0753	191	41
5310-167-0753	191	7
5310-167-0753	191	9
5310-167-0753	195	
5310-167-0753	195	2
5310-167-0753	195	24
5310-167-0753	195	27
5310-167-0753	195	41
5310-167-0753	195	45
5310-167-0753	195	49
5310-167-0753	195	5
5310-167-0753	196	
5310-167-0753	196	14
5310-167-0753	196	37
5310-167-0753	196	49B
5310-167-0753	196	7C
5310-167-0753	198	
5310-167-0753	198	48
5310-167-0753	200	
5310-167-0753	204	
5310-167-0753	204	25A
5310-167-0753	204	6
5310-167-0753	207	
5310-167-0753	207	
5310-167-0753	207	
5310-167-0753	207	
5310-167-0753	208	28
5310-167-0753	208	32
5310-167-0753	208	35
5310-167-0753	208	4
5310-167-0753	208	41
5310-167-0753	209	1

STOCK NUMBER	FIGURE NUMBER	ITEM NUMBER	STOCK NUMBER	FIGURE NUMBER	ITEM NUMBER
5310-167-0753	213		5310-167-0753	265	31
5310-167-0753	213	5	5310-167-0753	265	33
5310-167-0753	217		5310-167-0753	268	106
5310-167-0753	218		5310-167-0753	268	119
5310-167-0753	219		5310-167-0753	268	126
5310-167-0753	220		5310-167-0753	268	182A
5310-167-0753	221		5310-167-0753	268	52
5310-167-0753	221	10	5310-167-0753	268	53
5310-167-0753	221	101	5310-167-0753	268	80
5310-167-0753	221	102	5310-167-0753	270	28A
5310-167-0753	221	107	5310-167-0753	270	61C
5310-167-0753	221	111	5310-167-0753	273	11B
5310-167-0753	221	113	5310-167-0753	273	18D
5310-167-0753	221	114	5310-167-0753	275	
5310-167-0753	221	116	5310-167-0753	275	
5310-167-0753	221	119	5310-167-0753	275	
5310-167-0753	221	120	5310-167-0753	275	
5310-167-0753	221	127	5310-167-0753	276	
5310-167-0753	221	13	5310-167-0753	277	
5310-167-0753	221	130	5310-167-0753	278	
5310-167-0753	221	132	5310-167-0753	36A	15
5310-167-0753	221	138	5310-167-0753	36A	34
5310-167-0753	221	18	5310-167-0753	36A	40
5310-167-0753	221	18A	5310-167-0753	36B	
5310-167-0753	221	20A	5310-167-0753	36B	18
5310-167-0753	221	21	5310-167-0753	37B	13
5310-167-0753	221	23	5310-167-0753	37B	45
5310-167-0753	221	31	5310-167-0753	KITS	
5310-167-0753	221	32	5310-167-0753	217A	13
5310-167-0753	221	33	5310-167-0753	217A	14
5310-167-0753	221	36	5310-167-0753	217A	15
5310-167-0753	221	40	5310-167-0753	217A	23
5310-167-0753	221	41	5310-167-0753	217A	6
5310-167-0753	221	43	5310-167-0753	217A	7
5310-167-0753	221	47	5310-167-0753	217A	8
5310-167-0753	221	51	5310-167-0753	217B	10
5310-167-0753	221	54	5310-167-0753	217B	11
5310-167-0753	221	55	5310-167-0753	217B	16
5310-167-0753	221	56	5310-167-0753	217B	17
5310-167-0753	221	57	5310-167-0753	217B	2
5310-167-0753	221	58	5310-167-0753	217B	24
5310-167-0753	221	6	5310-167-0753	217B	27
5310-167-0753	221	68	5310-167-0753	217B	28
5310-167-0753	221	69	5310-167-0753	217B	3
5310-167-0753	221	72	5310-167-0753	217B	5
5310-167-0753	221	75	5310-167-0753	217B	6
5310-167-0753	221	78	5310-167-0753	219A	177
5310-167-0753	221	83	5310-167-0753	219A	180
5310-167-0753	221	84	5310-167-0753	219A	72
5310-167-0753	221	88	5310-167-0753	219A	75
5310-167-0753	221	94	5310-167-0753	219A	81
5310-167-0753	228	57	5310-167-0765	34	
5310-167-0753	228	83	5310-167-0765	62	10
5310-167-0753	229	11	5310-167-0765	QC1	21C
5310-167-0753	248	95	5310-167-0765	210	66
5310-167-0753	249	28	5310-167-0765	255	22
5310-167-0753	251	21	5310-167-0765	263	27B
5310-167-0753	253	24C	5310-167-0765	BULK	
5310-167-0753	253	27B	5310-167-0765	219A	175
5310-167-0753	253	43A	5310-167-0765	219A	70
5310-167-0753	255	3A	5310-167-0766	275	
5310-167-0753	256	10	5310-167-0766	37A	38
5310-167-0753	256	22C	5310-167-0766	BULK	
5310-167-0753	257	15B	5310-167-0769	BULK	
5310-167-0753	257	22F	5310-167-0770	BULK	
5310-167-0753	258	7B	5310-167-0797	BULK	
5310-167-0753	259	15D	5310-167-0801	21	16B
5310-167-0753	265	100	5310-167-0801	31	
5310-167-0753	265	102	5310-167-0801	33	10D
5310-167-0753	265	129	5310-167-0801	33	16B
5310-167-0753	265	13	5310-167-0801	33	26B

STOCK NUMBER	FIGURE NUMBER	ITEM NUMBER
5310-167-0801	62	46
5310-167-0801	62	51
5310-167-0801	134	2
5310-167-0801	134	44
5310-167-0801	228	
5310-167-0801	265	219
5310-167-0801	270	24A
5310-167-0801	270	4A
5310-167-0801	KITS	
5310-167-0803	25	25A
5310-167-0803	25	29B
5310-167-0803	33	10C
5310-167-0803	248	41
5310-167-0803	42B	11
5310-167-0804	45	17
5310-167-0804	153	6
5310-167-0804	265	225
5310-167-0805	31	
5310-167-0805	119	208
5310-167-0805	KITS	
5310-167-0806	20	46
5310-167-0806	34	49
5310-167-0806	62	
5310-167-0806	72	8
5310-167-0806	QC1	188A
5310-167-0806	263	5
5310-167-0806	270	14
5310-167-0806	270	20B
5310-167-0806	270	23B
5310-167-0806	270	48
5310-167-0807	263	11A
5310-167-0808	72	10
5310-167-0809	44	3
5310-167-0809	45	3
5310-167-0809	144	12
5310-167-0809	258	3B
5310-167-0810	269	6A
5310-167-0812	13	89
5310-167-0812	18	
5310-167-0812	21	
5310-167-0812	21	14B
5310-167-0812	34	
5310-167-0812	47	2
5310-167-0812	49	
5310-167-0812	66	29
5310-167-0812	66	30
5310-167-0812	66	34
5310-167-0812	66	37
5310-167-0812	QC1	
5310-167-0812	QC1	150B
5310-167-0812	QC1	153
5310-167-0812	188	65B
5310-167-0812	228	83
5310-167-0812	248	56
5310-167-0812	251	46B
5310-167-0812	268	215
5310-167-0812	275	
5310-167-0812	42B	3
5310-167-0812	64A	17
5310-167-0812	64A	2
5310-167-0812	KITS	
5310-167-0812	183A	6
5310-167-0814	137	13
5310-167-0814	137	3
5310-167-0814	42B	45
5310-167-0816	100	14
5310-167-0816	184	9
5310-167-0816	188	
5310-167-0816	215	47
5310-167-0816	BULK	
5310-167-0818	15	39
5310-167-0818	16	24
5310-167-0818	18	146
5310-167-0818	18	91C
5310-167-0818	18	98C
5310-167-0818	20	
5310-167-0818	24	12A
5310-167-0818	24	14A
5310-167-0818	24	16A
5310-167-0818	24	19B
5310-167-0818	24	20
5310-167-0818	24	22A
5310-167-0818	26	10
5310-167-0818	28	
5310-167-0818	28	37
5310-167-0818	31	
5310-167-0818	31	19
5310-167-0818	31	20C
5310-167-0818	53	26B
5310-167-0818	59	
5310-167-0818	60	14
5310-167-0818	62	13
5310-167-0818	67	2
5310-167-0818	71	120
5310-167-0818	76	102A
5310-167-0818	76	11B
5310-167-0818	76	12B
5310-167-0818	76	146B
5310-167-0818	76	170
5310-167-0818	76	176
5310-167-0818	76	178
5310-167-0818	76	179F
5310-167-0818	76	40
5310-167-0818	76	55
5310-167-0818	76	55C
5310-167-0818	76	72B
5310-167-0818	76	72E
5310-167-0818	81	10
5310-167-0818	81	49A
5310-167-0818	83	105
5310-167-0818	83	128
5310-167-0818	83	150A
5310-167-0818	83	16
5310-167-0818	83	163
5310-167-0818	83	30
5310-167-0818	83	40
5310-167-0818	83	49
5310-167-0818	83	56
5310-167-0818	83	7
5310-167-0818	83	75
5310-167-0818	88	18A
5310-167-0818	88	24E
5310-167-0818	88	46B
5310-167-0818	89	19
5310-167-0818	89	40
5310-167-0818	89	90
5310-167-0818	92	19
5310-167-0818	92	77
5310-167-0818	QC1	21D
5310-167-0818	100	6
5310-167-0818	135	11
5310-167-0818	148	13
5310-167-0818	148	7
5310-167-0818	191	39
5310-167-0818	198	
5310-167-0818	198	
5310-167-0818	198	
5310-167-0818	198	24
5310-167-0818	198	29
5310-167-0818	209	
5310-167-0818	222	
5310-167-0818	222	

STOCK NUMBER	FIGURE NUMBER	ITEM NUMBER	STOCK NUMBER	FIGURE NUMBER	ITEM NUMBER
5310-167-0818	223	108	5310-167-0820	223	103
5310-167-0818	223	114	5310-167-0820	223	125
5310-167-0818	223	48	5310-167-0820	223	190
5310-167-0818	228	29	5310-167-0820	223	205
5310-167-0818	228	57	5310-167-0820	229	21
5310-167-0818	229	19	5310-167-0820	235	16
5310-167-0818	245	2A	5310-167-0820	237	2
5310-167-0818	245	2B	5310-167-0820	237	30
5310-167-0818	245	21D	5310-167-0820	238	7
5310-167-0818	246	7	5310-167-0820	239	10
5310-167-0818	251	45B	5310-167-0820	239	152
5310-167-0818	263	13A	5310-167-0820	239	16
5310-167-0818	264	1D	5310-167-0820	242	14
5310-167-0818	264	3B	5310-167-0820	242	18
5310-167-0818	270	32B	5310-167-0820	242	9
5310-167-0818	274	12	5310-167-0820	243	4C
5310-167-0818	275	14C	5310-167-0820	244	10
5310-167-0818	281		5310-167-0820	244	2
5310-167-0818	36A	29	5310-167-0820	274	17
5310-167-0818	36A	33	5310-167-0820	42A	27
5310-167-0818	36A	38	5310-167-0820	42C	28
5310-167-0818	36B		5310-167-0820	KITS	
5310-167-0818	37A	30	5310-167-0821	11	23
5310-167-0818	BULK		5310-167-0821	11	59
5310-167-0818	KITS		5310-167-0821	11	96
5310-167-0820	11	129	5310-167-0821	16	5A
5310-167-0820	16	1A	5310-167-0821	43	13A
5310-167-0820	21	26B	5310-167-0821	45	10A
5310-167-0820	24	7	5310-167-0821	49	29
5310-167-0820	33		5310-167-0821	49	56B
5310-167-0820	59	7A	5310-167-0821	61	20
5310-167-0820	60	2	5310-167-0821	62	70
5310-167-0820	61	6	5310-167-0821	75	15
5310-167-0820	63	31	5310-167-0821	75	54
5310-167-0820	71	129	5310-167-0821	75	64
5310-167-0820	76	139	5310-167-0821	75	68
5310-167-0820	76	142B	5310-167-0821	76	114A
5310-167-0820	76	21	5310-167-0821	76	126C
5310-167-0820	76	24A	5310-167-0821	81	62
5310-167-0820	76	30	5310-167-0821	83	202
5310-167-0820	76	38A	5310-167-0821	83	27
5310-167-0820	76	57	5310-167-0821	83	34
5310-167-0820	76	85	5310-167-0821	88	1A
5310-167-0820	78	50	5310-167-0821	89	1A
5310-167-0820	80	1A	5310-167-0821	QC1	173A
5310-167-0820	81	143A	5310-167-0821	QC1	78A
5310-167-0820	81	156	5310-167-0821	222	174
5310-167-0820	83	13	5310-167-0821	222	92A
5310-167-0820	83	170	5310-167-0821	238	4
5310-167-0820	83	20B	5310-167-0821	238	55
5310-167-0820	83	278	5310-167-0821	238	57
5310-167-0820	83	285	5310-167-0821	239	3
5310-167-0820	83	304	5310-167-0821	239	85
5310-167-0820	83	328	5310-167-0821	240	10
5310-167-0820	83	368	5310-167-0821	240	38
5310-167-0820	83	4	5310-167-0821	240	49
5310-167-0820	83	96	5310-167-0821	244	101
5310-167-0820	87	12	5310-167-0821	244	112
5310-167-0820	87	15	5310-167-0821	244	133
5310-167-0820	87	2	5310-167-0821	244	64
5310-167-0820	87	9	5310-167-0821	42A	18
5310-167-0820	91	11	5310-167-0821	42A	7
5310-167-0820	92	2	5310-167-0821	42C	19
5310-167-0820	92	60	5310-167-0821	42C	5
5310-167-0820	F20	14	5310-167-0821	42C	8
5310-167-0820	QC1	2B	5310-167-0821	KITS	
5310-167-0820	11B	12A	5310-167-0822	11	24
5310-167-0820	11B	4	5310-167-0822	49	50A
5310-167-0820	149	48	5310-167-0822	60	36
5310-167-0820	222	109	5310-167-0822	61	37
5310-167-0820	222	38	5310-167-0822	81	133

STOCK NUMBER	FIGURE NUMBER	ITEM NUMBER
5310-167-0822	83	292
5310-167-0822	91	11
5310-167-0822	115	17
5310-167-0822	115	41
5310-167-0822	115	50
5310-167-0822	117	13A
5310-167-0822	119	
5310-167-0822	119	184
5310-167-0822	119	185
5310-167-0822	222	45
5310-167-0822	222	48
5310-167-0822	236	17
5310-167-0822	236	4
5310-167-0822	243	22C
5310-167-0822	244	122
5310-167-0822	244	42
5310-167-0823	53	1A
5310-167-0823	62	18
5310-167-0823	62	6B
5310-167-0823	75	15
5310-167-0823	75	46
5310-167-0823	F15	34
5310-167-0823	F15	40
5310-167-0823	F20	22
5310-167-0823	QC1	126A
5310-167-0823	QC1	184B
5310-167-0823	11B	36
5310-167-0823	222	115
5310-167-0823	222	127
5310-167-0823	222	160
5310-167-0823	222	165
5310-167-0823	222	179
5310-167-0823	222	194
5310-167-0823	222	205
5310-167-0823	222	55
5310-167-0823	222	60
5310-167-0823	222	74
5310-167-0823	222	87
5310-167-0823	237	35
5310-167-0823	237	7
5310-167-0823	238	38
5310-167-0823	238	60
5310-167-0823	239	103
5310-167-0823	239	165
5310-167-0823	240	103
5310-167-0823	244	49
5310-167-0823	244	53A
5310-167-0823	244	58
5310-167-0823	244	64
5310-167-0823	244	69
5310-167-0823	244	81
5310-167-0823	244	86
5310-167-0823	244	92
5310-167-0823	244	97
5310-167-0823	252	3
5310-167-0823	KITS	
5310-167-0824	49	32B
5310-167-0824	75	54
5310-167-0824	92	23
5310-167-0824	92	64
5310-167-0824	92	9
5310-167-0824	QC1	122
5310-167-0824	143	33
5310-167-0824	238	46
5310-167-0824	239	52
5310-167-0824	KITS	
5310-167-0825	45	9
5310-167-0825	54	5
5310-167-0825	69	8
5310-167-0825	70	23
5310-167-0825	92	48
5310-167-0825	92	95
5310-167-0825	118	85
5310-167-0825	118	87
5310-167-0825	240	76
5310-167-0825	244	57
5310-167-0825	244	68
5310-167-0825	244	86
5310-167-0825	244	97
5310-167-0825	261	14
5310-167-0825	KITS	
5310-167-0826	71	107
5310-167-0826	72	38
5310-167-0826	72	5
5310-167-0826	72	70
5310-167-0826	75	46
5310-167-0826	94	B
5310-167-0826	KITS	
5310-167-0827	BULK	
5310-167-0828	238	17
5310-167-0831	18	
5310-167-0831	193	56
5310-167-0831	193	92
5310-167-0831	194	23
5310-167-0831	194	27
5310-167-0831	194	34
5310-167-0831	194	57
5310-167-0831	189A	31A
5310-167-0832	193	42
5310-167-0832	193	44B
5310-167-0832	193	46
5310-167-0832	193	88
5310-167-0832	194	17
5310-167-0832	194	40
5310-167-0832	210	12
5310-167-0832	210	15
5310-167-0832	210	36
5310-167-0832	210	75
5310-167-0832	210	94
5310-167-0832	223	93
5310-167-0833	18	
5310-167-0833	92	51C
5310-167-0833	QC1	
5310-167-0833	189	12
5310-167-0833	198	
5310-167-0833	210	38
5310-167-0833	210	72
5310-167-0833	36A	24
5310-167-0833	KITS	
5310-167-0834	18	
5310-167-0834	18	161C
5310-167-0834	20	88B
5310-167-0834	45	22
5310-167-0834	51	35A
5310-167-0834	51	78
5310-167-0834	54	23
5310-167-0834	66	29
5310-167-0834	66	30
5310-167-0834	71	119
5310-167-0834	71	88A
5310-167-0834	76	179E
5310-167-0834	83	35B
5310-167-0834	89	44
5310-167-0834	92	20
5310-167-0834	92	78
5310-167-0834	95	167A
5310-167-0834	QC1	
5310-167-0834	QC1	158
5310-167-0834	QC1	41C
5310-167-0834	100	16
5310-167-0834	100	8
5310-167-0834	109	

STOCK NUMBER	FIGURE NUMBER	ITEM NUMBER
5310-167-0834	118	110
5310-167-0834	115	
5310-167-0834	116	
5310-167-0834	117	
5310-167-0834	119	
5310-167-0834	119	158
5310-167-0834	119	296
5310-167-0834	119	319
5310-167-0834	119	362
5310-167-0834	119	95
5310-167-0834	129	
5310-167-0834	135	3
5310-167-0834	191	16
5310-167-0834	195	13
5310-167-0834	198	
5310-167-0834	198	24
5310-167-0834	198	29
5310-167-0834	211	
5310-167-0834	211	24
5310-167-0834	212	10
5310-167-0834	213	
5310-167-0834	223	109
5310-167-0834	223	49
5310-167-0834	223	85
5310-167-0834	228	30
5310-167-0834	230	5
5310-167-0834	231	3
5310-167-0834	245	15A
5310-167-0834	245	21C
5310-167-0834	245	25A
5310-167-0834	246	12
5310-167-0834	246	15
5310-167-0834	246	7A
5310-167-0834	249	20A
5310-167-0834	251	10
5310-167-0834	251	34A
5310-167-0834	259	6B
5310-167-0834	262	35
5310-167-0834	262	46
5310-167-0834	262	7
5310-167-0834	263	24
5310-167-0834	281	
5310-167-0834	282	22
5310-167-0834	282	3
5310-167-0834	282	7
5310-167-0834	37A	18
5310-167-0834	37A	29
5310-167-0834	37A	35
5310-167-0834	37A	8
5310-167-0834	37A	95
5310-167-0834	KITS	
5310-167-0834	189A	21
5310-167-0835	11	45
5310-167-0835	11	46
5310-167-0835	16	26B
5310-167-0835	16	6C
5310-167-0835	18	147
5310-167-0835	20	109
5310-167-0835	21	83
5310-167-0835	21	90
5310-167-0835	24	6C
5310-167-0835	25	16B
5310-167-0835	31	
5310-167-0835	33	4
5310-167-0835	33	44C
5310-167-0835	34	44
5310-167-0835	37	1
5310-167-0835	49	42
5310-167-0835	51	3A
5310-167-0835	57	6
5310-167-0835	59	12
5310-167-0835	62	
5310-167-0835	71	114
5310-167-0835	71	139
5310-167-0835	71	41
5310-167-0835	71	44A
5310-167-0835	75	101
5310-167-0835	75	120
5310-167-0835	75	129
5310-167-0835	75	90
5310-167-0835	76	157
5310-167-0835	81	166A
5310-167-0835	89	26
5310-167-0835	89	67
5310-167-0835	F17	23
5310-167-0835	F17	5
5310-167-0835	F19	5
5310-167-0835	QC1	26A
5310-167-0835	119	
5310-167-0835	119	125
5310-167-0835	119	228
5310-167-0835	119	272
5310-167-0835	119	330
5310-167-0835	119	377
5310-167-0835	183	37
5310-167-0835	210	23
5310-167-0835	210	57
5310-167-0835	210	61
5310-167-0835	210	9
5310-167-0835	211	14
5310-167-0835	211	18A
5310-167-0835	211	21A
5310-167-0835	212	12
5310-167-0835	222	
5310-167-0835	222	139
5310-167-0835	222	14
5310-167-0835	222	146
5310-167-0835	222	19C
5310-167-0835	222	37
5310-167-0835	222	4
5310-167-0835	223	10
5310-167-0835	223	138
5310-167-0835	223	17
5310-167-0835	223	18
5310-167-0835	223	24
5310-167-0835	223	25
5310-167-0835	223	32
5310-167-0835	223	33
5310-167-0835	223	4
5310-167-0835	223	42
5310-167-0835	223	78
5310-167-0835	226	5
5310-167-0835	228	10
5310-167-0835	228	115
5310-167-0835	228	121
5310-167-0835	228	14
5310-167-0835	228	176
5310-167-0835	228	187
5310-167-0835	228	36
5310-167-0835	228	44
5310-167-0835	228	50
5310-167-0835	228	6
5310-167-0835	228	62
5310-167-0835	228	68
5310-167-0835	228	74
5310-167-0835	228	98
5310-167-0835	229	24
5310-167-0835	229	28
5310-167-0835	229	33
5310-167-0835	229	39
5310-167-0835	235	10
5310-167-0835	237	19

STOCK NUMBER	FIGURE NUMBER	ITEM NUMBER
5310-167-0835	237	47
5310-167-0835	239	117
5310-167-0835	239	131
5310-167-0835	239	97
5310-167-0835	240	20
5310-167-0835	240	28
5310-167-0835	242	16
5310-167-0835	242	27
5310-167-0835	244	16
5310-167-0835	244	18
5310-167-0835	244	25
5310-167-0835	244	27
5310-167-0835	246	3
5310-167-0835	280	9
5310-167-0835	37A	102
5310-167-0835	37A	14
5310-167-0835	37A	45
5310-167-0835	37A	62
5310-167-0835	37A	91
5310-167-0835	42B	10
5310-167-0835	42B	52
5310-167-0835	42B	72
5310-167-0835	KITS	
5310-167-0836	11	107
5310-167-0836	11	49
5310-167-0836	71	129A
5310-167-0836	75	101
5310-167-0836	75	94
5310-167-0836	89	31
5310-167-0836	89	78
5310-167-0836	11B	12B
5310-167-0836	11B	5
5310-167-0836	222	108
5310-167-0836	222	39
5310-167-0836	223	104
5310-167-0836	223	126
5310-167-0836	223	148
5310-167-0836	223	149
5310-167-0836	223	191
5310-167-0836	223	206
5310-167-0836	223	77
5310-167-0836	229	20
5310-167-0836	229	6
5310-167-0836	237	29
5310-167-0836	239	11
5310-167-0836	239	153
5310-167-0836	239	17
5310-167-0836	242	10
5310-167-0836	242	12
5310-167-0836	242	15
5310-167-0836	242	17
5310-167-0836	243	4D
5310-167-0836	244	3
5310-167-0836	245	10A
5310-167-0836	246	
5310-167-0836	284	22
5310-167-0836	285	22
5310-167-0837	11	103
5310-167-0837	11	44
5310-167-0837	11	84C
5310-167-0837	11	93
5310-167-0837	20	
5310-167-0837	44	25C
5310-167-0837	45	11
5310-167-0837	45	12C
5310-167-0837	51	74
5310-167-0837	60	18
5310-167-0837	61	15
5310-167-0837	61	3
5310-167-0837	75	166
5310-167-0837	75	54
5310-167-0837	75	64
5310-167-0837	75	68
5310-167-0837	223	162
5310-167-0837	223	163
5310-167-0837	223	55
5310-167-0837	238	13
5310-167-0837	239	4
5310-167-0837	239	86
5310-167-0837	242	13
5310-167-0837	242	19
5310-167-0837	243	9C
5310-167-0837	244	111
5310-167-0838	139	118
5310-167-0838	222	49
5310-167-0838	243	15C
5310-167-0838	243	22D
5310-167-0838	244	37
5310-167-0838	244	43
5310-167-0839	11	40
5310-167-0839	11	41
5310-167-0839	59	20B
5310-167-0839	62	27
5310-167-0839	75	15
5310-167-0839	75	46
5310-167-0839	F15	11
5310-167-0839	F15	7
5310-167-0839	QC1	18A
5310-167-0839	11B	36B
5310-167-0839	222	
5310-167-0839	222	114
5310-167-0839	222	126
5310-167-0839	222	166
5310-167-0839	222	180
5310-167-0839	222	193
5310-167-0839	222	204
5310-167-0839	222	75
5310-167-0839	222	84
5310-167-0839	237	36
5310-167-0839	237	8
5310-167-0839	239	104
5310-167-0839	244	49
5310-167-0839	244	69
5310-167-0839	244	86
5310-167-0839	244	97
5310-167-0839	KITS	
5310-167-0841	44	18B
5310-167-0841	45	14
5310-167-0841	69	8A
5310-167-0841	70	23A
5310-167-0841	11B	36A
5310-167-0841	11B	84
5310-167-0841	11B	87
5310-167-0841	244	
5310-167-0841	244	69
5310-167-0841	244	86
5310-167-0841	244	97
5310-167-0842	75	46
5310-167-0842	239	41
5310-167-0842	239	75
5310-167-0842	269	8B
5310-167-0844	222	187
5310-167-0844	222	67
5310-167-1281	22	17B
5310-167-1281	22	22C
5310-167-1281	22	3B
5310-167-1281	22	6C
5310-167-1281	137	12
5310-167-1281	137	2
5310-167-1281	KITS	
5310-167-1284	11	101
5310-167-1284	18	91B

STOCK NUMBER	FIGURE NUMBER	ITEM NUMBER
5310-167-1284	18	98B
5310-167-1284	62	9
5310-167-1284	66	28
5310-167-1284	88	84I
5310-167-1284	88	87C
5310-167-1284	QC1	21B
5310-167-1284	QC1	41B
5310-167-1284	266	11
5310-167-1284	275	14B
5310-167-1284	KITS	
5310-167-1285	31	
5310-167-1285	34	44
5310-167-1285	F15	21
5310-167-1285	QC1	37B
5310-167-1285	154	6
5310-167-1285	223	89
5310-167-1285	42A	13
5310-167-1285	42C	14
5310-167-1285	KITS	
5310-167-1286	24	7
5310-167-1286	248	43
5310-167-1286	KITS	
5310-167-1288	BULK	
5310-167-1289	59	20A
5310-167-1289	75	14
5310-167-1289	75	45
5310-167-1289	F15	27
5310-167-1289	F15	52
5310-167-1289	222	61
5310-167-1289	244	59
5310-167-1289	KITS	
5310-167-1290	75	53
5310-167-1290	263	11
5310-167-1292	44	2
5310-167-1292	45	1
5310-167-1292	72	3
5310-167-1292	72	37
5310-167-1292	72	69
5310-167-1292	75	45
5310-167-1292	KITS	
5310-167-1294	44	25F
5310-167-1294	45	13A
5310-167-1300	11	43
5310-167-1300	11	93
5310-167-1300	15	23
5310-167-1300	20	66
5310-167-1300	210	28
5310-167-1300	210	31
5310-167-1300	222	
5310-167-1300	223	
5310-167-1300	228	
5310-167-1300	228	20
5310-167-1300	237	27
5310-167-1300	237	55
5310-167-1300	240	
5310-167-1300	243	
5310-167-1300	244	
5310-167-1300	273	22B
5310-167-1300	273	29A
5310-167-1302	239	
5310-167-1304	11	40
5310-167-1304	25	14
5310-167-1304	239	
5310-167-1304	KITS	
5310-167-1319	16	50A
5310-167-1319	19	10
5310-167-1319	28	34
5310-167-1326	20	51
5310-167-1342	BULK	
5310-167-1343	209	
5310-167-1343	210	89
5310-167-1343	265	12
5310-167-1343	268	79
5310-167-1344	210	55
5310-167-1344	197A	18
5310-167-1345	235	15
5310-167-1346	15	
5310-167-1346	15	12
5310-167-1346	207	
5310-167-1346	238	12
5310-167-1346	KITS	
5310-176-6107	75	31
5310-176-6108	75	27
5310-176-6503	76	144C
5310-176-6509	76	144B
5310-176-6586	72	21A
5310-176-6586	72	52A
5310-176-6586	73	25
5310-176-8108	16	68
5310-176-8108	24	28
5310-176-8108	24	68
5310-176-8108	33	44B
5310-176-8108	59	11
5310-176-8108	76	160A
5310-176-8108	428	
5310-176-8108	428	51
5310-176-8108	428	62
5310-176-8108	428	7
5310-176-8109	60	20
5310-176-8109	71	128
5310-176-8109	223	102
5310-176-8109	428	44
5310-176-8109	428	8
5310-176-8109	KITS	
5310-176-8110	45	10A
5310-176-8110	45	11
5310-176-8110	49	30
5310-176-8110	60	16
5310-176-8110	61	14
5310-176-8110	61	2
5310-176-8110	75	14
5310-176-8110	75	53
5310-176-8110	75	63
5310-176-8110	223	161
5310-176-8110	KITS	
5310-176-8111	34	37
5310-176-8111	222	50
5310-176-8111	244	44
5310-176-8111	KITS	
5310-176-8112	34	48
5310-176-8112	75	14
5310-176-8112	75	45
5310-176-8112	F15	6
5310-176-8112	222	167
5310-176-8112	222	181
5310-176-8112	222	192
5310-176-8112	222	203
5310-176-8112	222	61
5310-176-8112	222	71
5310-176-8112	222	88
5310-176-8112	222	98
5310-176-8112	244	59
5310-176-8112	244	70
5310-176-8112	244	87
5310-176-8112	244	98
5310-176-8112	KITS	
5310-176-8113	49	32A
5310-176-8113	51	25C
5310-176-8113	75	53
5310-176-8113	238	47
5310-176-8113	239	51
5310-176-8113	KITS	

STOCK NUMBER	FIGURE NUMBER	ITEM NUMBER
5310-176-8114	44	18A
5310-176-8114	45	14
5310-176-8115	72	3
5310-176-8115	72	37
5310-176-8115	72	69
5310-176-8115	75	45
5310-176-8115	94	7
5310-176-8117	222	186
5310-176-8117	222	66
5310-176-8117	238	15
5310-176-8118	BULK	
5310-177-1083	173	25
5310-177-1088	76	1A
5310-177-1089	91	1
5310-177-1089	KITS	
5310-177-1095	81	2
5310-177-1095	83	1A
5310-177-1095	KITS	
5310-177-1354	BULK	
5310-177-7671	62	
5310-183-4355	20	
5310-183-4355	43	13C
5310-183-4355	45	8A
5310-183-4355	263	2
5310-183-4355	268	220
5310-183-4355	KITS	
5310-183-4356	129	45A
5310-183-4356	213	
5310-183-4356	213	18
5310-183-4356	220	
5310-183-4356	220	
5310-183-4356	221	26
5310-183-4356	221	28
5310-183-4356	221	34
5310-183-4356	221	67
5310-183-4356	221	73
5310-183-4356	221	76
5310-183-4357	BULK	
5310-183-4362	21	3
5310-183-4362	11B	36A
5310-183-4362	KITS	
5310-183-4397	34	
5310-183-4397	95	58
5310-183-4397	129	102B
5310-183-4397	139	51
5310-183-4397	139	52
5310-183-4397	139	98
5310-183-4406	11	100
5310-183-4406	11	39
5310-183-4406	13	13
5310-183-4406	13	22
5310-183-4406	13	31
5310-183-4406	13	40E
5310-183-4406	13	47
5310-183-4406	13	59
5310-183-4406	13	73
5310-183-4406	13	82
5310-183-4406	15	10A
5310-183-4406	15	45C
5310-183-4406	15	48A
5310-183-4406	17	14
5310-183-4406	17	22
5310-183-4406	21	50
5310-183-4406	22	
5310-183-4406	22	41E
5310-183-4406	28	
5310-183-4406	28	24G
5310-183-4406	29	2B
5310-183-4406	31	
5310-183-4406	31	
5310-183-4406	32	
5310-183-4406	32	35
5310-183-4406	33	39C
5310-183-4406	33	41B
5310-183-4406	34	
5310-183-4406	45	11A
5310-183-4406	66	38
5310-183-4406	75	111
5310-183-4406	81	5A
5310-183-4406	88	84G
5310-183-4406	88	87A
5310-183-4406	95	23
5310-183-4406	95	27
5310-183-4406	QC1	
5310-183-4406	109	
5310-183-4406	109	77B
5310-183-4406	110	
5310-183-4406	112	34
5310-183-4406	112	78
5310-183-4406	116	
5310-183-4406	117	
5310-183-4406	119	
5310-183-4406	119	23
5310-183-4406	119	34
5310-183-4406	119	381
5310-183-4406	119	49
5310-183-4406	129	
5310-183-4406	129	23A
5310-183-4406	129	23F
5310-183-4406	129	23I
5310-183-4406	139	
5310-183-4406	154	2
5310-183-4406	178	71
5310-183-4406	182	
5310-183-4406	182	
5310-183-4406	188	
5310-183-4406	188	42
5310-183-4406	196	49C
5310-183-4406	201	60
5310-183-4406	204	1A
5310-183-4406	207	
5310-183-4406	207	
5310-183-4406	217	
5310-183-4406	217	4
5310-183-4406	218	
5310-183-4406	218	73C
5310-183-4406	218	73D
5310-183-4406	218	73E
5310-183-4406	218	74A
5310-183-4406	218	74C
5310-183-4406	220	
5310-183-4406	223	71
5310-183-4406	226	21
5310-183-4406	228	80
5310-183-4406	228	88
5310-183-4406	229	3
5310-183-4406	251	2
5310-183-4406	253	1B
5310-183-4406	255	
5310-183-4406	255	1A
5310-183-4406	255	10A
5310-183-4406	255	11C
5310-183-4406	255	16A
5310-183-4406	255	18A
5310-183-4406	256	19A
5310-183-4406	257	2C
5310-183-4406	275	
5310-183-4406	275	
5310-183-4406	279	
5310-183-4406	378	14
5310-183-4406	378	44
5310-183-4406	42A	3

STOCK NUMBER	FIGURE NUMBER	ITEM NUMBER
5310-183-4406	42C	2
5310-183-4406	KITS	
5310-184-8966	18	
5310-184-8966	24	19B
5310-184-8966	28	14A
5310-184-8966	34	
5310-184-8966	37	46
5310-184-8966	42	
5310-184-8966	42	2A
5310-184-8966	11C	64C
5310-184-8966	188	
5310-184-8966	188	63
5310-184-8966	189	40
5310-184-8966	196	
5310-184-8966	196	10B
5310-184-8966	204	
5310-184-8966	204	28
5310-184-8966	253	4C
5310-184-8966	253	41
5310-184-8966	255	28
5310-184-8966	255	21
5310-184-8966	265	134
5310-184-8966	265	22
5310-184-8966	268	
5310-184-8966	268	158
5310-184-8966	268	54
5310-184-8966	268	89
5310-184-8966	276	
5310-184-8966	276	
5310-184-8966	277	
5310-184-8966	278	
5310-184-8976	11	91
5310-184-8976	F15	28
5310-184-8976	187	21
5310-184-8976	222	60
5310-184-8976	222	97
5310-184-8976	244	
5310-184-8976	244	69
5310-184-8976	264	14
5310-184-8976	KITS	
5310-184-8977	178	68
5310-184-8980	11	88
5310-184-8980	20	
5310-184-8980	20	30
5310-184-8980	20	55
5310-184-8980	21	5
5310-184-8980	21	54
5310-184-8980	22	22A
5310-184-8980	22	41B
5310-184-8980	22	6A
5310-184-8985	32	58B
5310-184-8985	95	155
5310-184-8985	KITS	
5310-184-8990	BULK	
5310-184-8996	BULK	
5310-184-9001	13	91A
5310-184-9001	15	6B
5310-184-9001	18	
5310-184-9001	18	107
5310-184-9001	18	58
5310-184-9001	18	70
5310-184-9001	18	74
5310-184-9001	20	
5310-184-9001	20	
5310-184-9001	20	24
5310-184-9001	20	34
5310-184-9001	20	36
5310-184-9001	20	45
5310-184-9001	20	59
5310-184-9001	22	25A
5310-184-9001	22	5A
5310-184-9001	28	
5310-184-9001	28	24U
5310-184-9001	29	
5310-184-9001	31	
5310-184-9001	33	4
5310-184-9001	34	
5310-184-9001	62	
5310-184-9001	66	41
5310-184-9001	F16	12
5310-184-9001	F16	42
5310-184-9001	F16	45
5310-184-9001	F16	9
5310-184-9001	QC1	46A
5310-184-9001	109	54B
5310-184-9001	109	58B
5310-184-9001	109	61C
5310-184-9001	11C	16
5310-184-9001	112	39
5310-184-9001	129	77
5310-184-9001	139	
5310-184-9001	207	
5310-184-9001	208	25
5310-184-9001	208	38
5310-184-9001	213	
5310-184-9001	218	
5310-184-9001	218	11A
5310-184-9001	218	18
5310-184-9001	218	2
5310-184-9001	218	28
5310-184-9001	218	32
5310-184-9001	218	37A
5310-184-9001	218	42C
5310-184-9001	218	7
5310-184-9001	219	11
5310-184-9001	219	24
5310-184-9001	219	45
5310-184-9001	219	62
5310-184-90C1	219	70
5310-184-9001	219	92
5310-184-9001	220	
5310-184-9001	221	
5310-184-9001	255	5B
5310-184-9001	265	157
5310-184-9001	265	184
5310-184-9001	265	186
5310-184-9001	265	274
5310-184-9001	265	3
5310-184-9001	265	47
5310-184-9001	265	49
5310-184-9001	265	51
5310-184-9001	265	60
5310-184-9001	265	62
5310-184-9001	265	64
5310-184-9001	265	9
5310-184-9001	268	11
5310-184-9001	268	147
5310-184-9001	268	173A
5310-184-9001	268	203A
5310-184-9001	268	209
5310-184-9001	268	230
5310-184-9001	268	240A
5310-184-9001	268	31
5310-184-9001	268	4
5310-184-9001	268	76
5310-184-9001	273	22
5310-184-9001	273	4A
5310-184-9001	278	
5310-184-9001	378	22
5310-184-9001	378	29
5310-184-9001	378	33
5310-184-9001	KITS	

STOCK NUMBER	FIGURE NUMBER	ITEM NUMBER
5310-184-9001	219A	107
5310-184-9001	219A	117
5310-184-9001	219A	12
5310-184-9001	219A	122
5310-184-9001	219A	127
5310-184-9001	219A	143
5310-184-9001	219A	162
5310-184-9001	219A	165
5310-184-9001	219A	17
5310-184-9001	219A	2
5310-184-9001	219A	22
5310-184-9001	219A	42
5310-184-9001	219A	57
5310-184-9001	219A	60
5310-184-9002	10	1B
5310-184-9002	20	
5310-184-9002	31	
5310-184-9002	39	
5310-184-9002	188	
5310-184-9002	188	
5310-184-9002	188	58
5310-184-9002	191	28
5310-184-9002	191	3
5310-184-9002	191	36
5310-184-9002	195	
5310-184-9002	195	31
5310-184-9002	195	32A
5310-184-9002	195	36
5310-184-9002	195	39
5310-184-9002	196	
5310-184-9002	196	2A
5310-184-9002	198	
5310-184-9002	198	43
5310-184-9002	204	
5310-184-9002	204	19B
5310-184-9002	251	58C
5310-184-9002	255	12B
5310-184-9002	255	15B
5310-184-9002	265	282
5310-184-9002	268	245A
5310-184-9002	275	
5310-184-9002	277	
5310-184-9002	279	
5310-184-9002	KITS	
5310-185-0113	193	71
5310-186-1009	248	68
5310-186-1295	QC1	129
5310-186-1295	QC1	94
5310-186-1295	109	14B
5310-186-1295	109	3
5310-186-1295	109	40
5310-186-1295	109	50
5310-186-1295	109	53B
5310-186-1295	109	55B
5310-186-1295	109	71B
5310-186-1295	112	1
5310-186-1295	112	14
5310-186-1295	112	18
5310-186-1295	112	22
5310-186-1295	112	29
5310-186-1295	112	33
5310-186-1295	112	35
5310-186-1295	112	38
5310-186-1295	112	44
5310-186-1295	112	48
5310-186-1295	116	
5310-186-1295	117	58A
5310-186-1295	117	95C
5310-186-1295	119	284
5310-186-1295	119	306
5310-186-1295	119	315
5310-186-1295	119	326
5310-186-1295	129	
5310-186-1295	129	109B
5310-186-1295	129	111A
5310-186-1295	129	44A
5310-186-1295	129	67B
5310-186-1295	129	70A
5310-186-1295	129	70B
5310-186-1295	139	23
5310-186-1295	139	4
5310-186-1295	139	45
5310-186-1295	139	57
5310-186-1295	139	72
5310-186-1295	143	
5310-186-1295	KITS	
5310-186-1380	QC1	83
5310-186-1380	109	16
5310-186-1380	109	46
5310-186-1380	117	73C
5310-186-1380	117	79B
5310-186-1380	119	268
5310-186-1380	119	341
5310-186-1380	129	121
5310-186-1380	129	146
5310-186-1380	129	97
5310-186-1380	139	25
5310-186-1380	139	35
5310-186-1380	139	76
5310-186-1380	139	83
5310-186-1380	139	97
5310-186-1380	143	4
5310-186-1380	KITS	
5310-186-1381	QC1	89
5310-186-1381	119	337
5310-186-1381	129	1A
5310-186-1381	129	10A
5310-186-1381	129	75B
5310-186-1381	129	9
5310-186-1381	143	8
5310-186-4946	KITS	
5310-186-4947	44	31
5310-186-4947	51	
5310-186-4947	QC1	105
5310-186-4947	QC1	115
5310-186-4947	109	1
5310-186-4947	109	42
5310-186-4947	109	57B
5310-186-4947	109	60B
5310-186-4947	110	47
5310-186-4947	110	7
5310-186-4947	112	123
5310-186-4947	112	129
5310-186-4947	112	133
5310-186-4947	112	137
5310-186-4947	112	141
5310-186-4947	112	143
5310-186-4947	112	149
5310-186-4947	112	151
5310-186-4947	112	159
5310-186-4947	112	167
5310-186-4947	112	6
5310-186-4947	112	64
5310-186-4947	112	67
5310-186-4947	112	72
5310-186-4947	112	95
5310-186-4947	112	97
5310-186-4947	115	46
5310-186-4947	117	
5310-186-4947	117	2A
5310-186-4947	117	28
5310-186-4947	117	4A

STOCK NUMBER	FIGURE NUMBER	ITEM NUMBER
5310-186-4947	117	6A
5310-186-4947	117	75B
5310-186-4947	117	83
5310-186-4947	117	95G
5310-186-4947	119	
5310-186-4947	119	121
5310-186-4947	119	132
5310-186-4947	119	148
5310-186-4947	119	15
5310-186-4947	119	164
5310-186-4947	119	197
5310-186-4947	119	201
5310-186-4947	119	214
5310-186-4947	119	223
5310-186-4947	119	229
5310-186-4947	119	278
5310-186-4947	119	29
5310-186-4947	119	346
5310-186-4947	119	365
5310-186-4947	119	398
5310-186-4947	119	42
5310-186-4947	119	71
5310-186-4947	119	80
5310-186-4947	119	99
5310-186-4947	129	
5310-186-4947	129	142
5310-186-4947	129	25A
5310-186-4947	129	35B
5310-186-4947	129	52A
5310-186-4947	129	82A
5310-186-4947	129	95B
5310-186-4947	129	95D
5310-186-4947	129	95G
5310-186-4947	139	2
5310-186-4947	139	61
5310-186-4947	143	27
5310-186-4947	146	9
5310-186-4947	KITS	
5310-187-2354	11	145
5310-187-2354	11	149
5310-187-2354	13	39
5310-187-2354	13	66
5310-187-2354	13	9
5310-187-2354	15	17B
5310-187-2354	15	21B
5310-187-2354	15	27B
5310-187-2354	15	28C
5310-187-2354	15	31C
5310-187-2354	15	36A
5310-187-2354	15	43
5310-187-2354	15	6A
5310-187-2354	17	
5310-187-2354	17	2
5310-187-2354	17	7
5310-187-2354	18	
5310-187-2354	18	113
5310-187-2354	18	63
5310-187-2354	18	66
5310-187-2354	20	106
5310-187-2354	21	
5310-187-2354	21	27E
5310-187-2354	21	50A
5310-187-2354	21	61C
5310-187-2354	22	25B
5310-187-2354	22	5B
5310-187-2354	25	2B
5310-187-2354	25	35
5310-187-2354	28	40
5310-187-2354	31	
5310-187-2354	33	35A
5310-187-2354	36	11B
5310-187-2354	36	12C
5310-187-2354	36	18B
5310-187-2354	36	9A
5310-187-2354	62	
5310-187-2354	75	2
5310-187-2354	75	3
5310-187-2354	75	4
5310-187-2354	F16	20
5310-187-2354	F16	34
5310-187-2354	QC1	
5310-187-2354	QC1	32C
5310-187-2354	QC1	32D
5310-187-2354	109	13B
5310-187-2354	109	58C
5310-187-2354	109	61B
5310-187-2354	11A	14
5310-187-2354	117	
5310-187-2354	129	
5310-187-2354	139	
5310-187-2354	139	
5310-187-2354	158	9
5310-187-2354	207	
5310-187-2354	213	
5310-187-2354	218	11A
5310-187-2354	218	2
5310-187-2354	218	37
5310-187-2354	218	42
5310-187-2354	218	47
5310-187-2354	218	54
5310-187-2354	218	7
5310-187-2354	219	
5310-187-2354	219	21
5310-187-2354	219	36
5310-187-2354	219	40
5310-187-2354	219	49
5310-187-2354	219	5
5310-187-2354	219	56
5310-187-2354	219	66
5310-187-2354	219	81
5310-187-2354	219	96
5310-187-2354	220	
5310-187-2354	223	91
5310-187-2354	256	7
5310-187-2354	257	19D
5310-187-2354	258	11D
5310-187-2354	273	28
5310-187-2354	37B	20
5310-187-2354	37B	27
5310-187-2354	BULK	
5310-187-2354	KITS	
5310-187-2393	129	56A
5310-187-2393	KITS	
5310-187-2394	BULK	
5310-187-2394	KITS	
5310-187-2395	20	66
5310-187-2395	43	13D
5310-187-2395	45	8B
5310-187-2395	KITS	
5310-187-2397	62	76
5310-187-2397	76	112B
5310-187-2397	QC1	
5310-187-2397	182	
5310-187-2397	188	
5310-187-2397	191	32
5310-187-2397	195	33D
5310-187-2397	204	
5310-187-2397	204	13B
5310-187-2397	268	151A
5310-187-2397	275	
5310-187-2397	275	28
5310-187-2397	KITS	

STOCK NUMBER	FIGURE NUMBER	ITEM NUMBER
5310-187-2398	196	51C
5310-187-2398	196	57
5310-187-2398	265	211
5310-187-2398	265	78
5310-187-2398	268	158E
5310-187-2398	268	36
5310-187-2399	11	32
5310-187-2399	11	89
5310-187-2399	13	2C
5310-187-2399	21	54
5310-187-2399	21	61B
5310-187-2399	22	12A
5310-187-2399	22	17A
5310-187-2399	22	19A
5310-187-2399	22	22B
5310-187-2399	22	3A
5310-187-2399	22	32A
5310-187-2399	22	36
5310-187-2399	22	41C
5310-187-2399	22	6B
5310-187-2399	22	9A
5310-187-2399	36	
5310-187-2399	71	12
5310-187-2399	129	
5310-187-2399	264	
5310-187-2399	264	10A
5310-187-2399	KITS	
5310-187-2400	11	127B
5310-187-2400	11	31
5310-187-2400	15	12
5310-187-2400	15	23A
5310-187-2400	15	8C
5310-187-2400	28	24N
5310-187-2400	43	13B
5310-187-2400	45	10A
5310-187-2400	75	64
5310-187-2400	F16	37
5310-187-2400	F20	4
5310-187-2400	196	
5310-187-2400	207	
5310-187-2400	222	97
5310-187-2400	244	69
5310-187-2400	256	1
5310-187-2400	256	16
5310-187-2400	265	138
5310-187-2400	268	94
5310-187-2400	273	14A
5310-187-2400	KITS	
5310-187-2401	28	3A
5310-187-2401	28	4A
5310-187-2401	95	155
5310-187-2401	109	10
5310-187-2401	109	32
5310-187-2401	118	122
5310-187-2401	110	
5310-187-2401	110	20
5310-187-2401	110	25
5310-187-2401	110	30
5310-187-2401	110	38
5310-187-2401	110	39
5310-187-2401	110	42
5310-187-2401	110	51
5310-187-2401	110	68
5310-187-2401	110	82
5310-187-2401	110	85
5310-187-2401	115	
5310-187-2401	115	1
5310-187-2401	115	10
5310-187-2401	115	11
5310-187-2401	115	13
5310-187-2401	115	15
5310-187-2401	115	19
5310-187-2401	115	22
5310-187-2401	115	26
5310-187-2401	115	3
5310-187-2401	115	34
5310-187-2401	115	8
5310-187-2401	116	
5310-187-2401	117	
5310-187-2401	117	19D
5310-187-2401	117	19I
5310-187-2401	117	25A
5310-187-2401	117	28B
5310-187-2401	119	
5310-187-2401	119	117
5310-187-2401	119	120
5310-187-2401	119	136
5310-187-2401	119	139
5310-187-2401	119	172
5310-187-2401	119	208
5310-187-2401	119	219
5310-187-2401	119	368
5310-187-2401	119	89
5310-187-2401	129	
5310-187-2401	129	35A
5310-187-2401	129	41A
5310-187-2401	129	53
5310-187-2401	129	61A
5310-187-2401	129	81A
5310-187-2401	129	84A
5310-187-2401	135	7
5310-187-2401	139	6
5310-187-2401	178	16
5310-187-2401	178	41
5310-187-2401	179	25B
5310-187-2401	179	9B
5310-187-2401	180	15A
5310-187-2401	180	20A
5310-187-2401	180	25A
5310-187-2401	213	
5310-187-2401	220	
5310-187-2401	KITS	
5310-187-2402	109	18
5310-187-2402	109	20
5310-187-2402	109	23
5310-187-2402	109	27
5310-187-2402	109	29
5310-187-2402	109	35
5310-187-2402	109	38
5310-187-2402	109	70
5310-187-2402	109	73
5310-187-2402	109	74
5310-187-2402	109	8
5310-187-2402	109	86
5310-187-2402	110	34
5310-187-2402	110	35
5310-187-2402	110	64
5310-187-2402	110	80
5310-187-2402	110	84
5310-187-2402	112	62
5310-187-2402	115	55
5310-187-2402	115	57
5310-187-2402	116	
5310-187-2402	117	
5310-187-2402	117	58E
5310-187-2402	117	91
5310-187-2402	117	98
5310-187-2402	119	237
5310-187-2402	119	242
5310-187-2402	119	247
5310-187-2402	119	250
5310-187-2402	129	37

STOCK NUMBER	FIGURE NUMBER	ITEM NUMBER
5310-187-2402	129	41C
5310-187-2402	129	68A
5310-187-2402	139	105
5310-187-2402	139	108
5310-187-2402	139	13
5310-187-2402	139	15
5310-187-2402	139	18
5310-187-2402	139	27
5310-187-2402	139	28
5310-187-2402	139	43
5310-187-2402	139	47
5310-187-2402	139	59
5310-187-2402	139	67
5310-187-2402	139	74
5310-187-2402	178	131
5310-187-2402	178	38
5310-187-2402	178	80
5310-187-2402	213	
5310-187-2402	220	
5310-187-2402	221	133
5310-187-2402	221	19
5310-187-2402	221	22
5310-187-2402	221	25
5310-187-2402	221	63
5310-187-2402	221	66
5310-187-2402	221	7
5310-187-2402	221	95
5310-187-2402	251	18B
5310-187-2402	273	10B
5310-187-2402	KITS	
5310-187-2403	21	3A
5310-187-2403	118	
5310-187-2403	118	84
5310-187-2403	KITS	
5310-187-2404	109	48
5310-187-2404	117	
5310-187-2404	117	43A
5310-187-2404	117	86
5310-187-2404	117	87
5310-187-2404	119	264
5310-187-2404	129	
5310-187-2404	129	102A
5310-187-2404	129	112A
5310-187-2404	129	39
5310-187-2404	139	30
5310-187-2404	139	31
5310-187-2404	139	78
5310-187-2405	117	
5310-187-2405	119	260
5310-187-2405	129	
5310-187-2405	139	33
5310-187-2405	139	81
5310-187-2405	219	16
5310-187-2405	219	90
5310-187-2405	219A	153
5310-187-2405	219A	54
5310-187-2406	218	23
5310-187-2406	219	19
5310-187-2406	219	87
5310-187-2406	219A	157
5310-187-2406	219A	50
5310-188-3744	125	6
5310-188-7721	13	97
5310-188-7721	18	132A
5310-188-7721	62	5
5310-188-7721	157	69
5310-188-7721	157	72
5310-188-7721	157	77
5310-188-7721	157	81
5310-188-7721	157	90
5310-188-7721	158	69
5310-188-7721	158	73
5310-188-7721	158	76
5310-188-7721	167	25
5310-188-7721	182	
5310-188-7721	188	
5310-188-7721	188	15
5310-188-7721	188	47A
5310-188-7721	189	7
5310-188-7721	196	
5310-188-7721	196	13B
5310-188-7721	196	26
5310-188-7721	196	34
5310-188-7721	196	51B
5310-188-7721	196	56
5310-188-7721	200	
5310-188-7721	204	
5310-188-7721	207	
5310-188-7721	228	
5310-188-7721	234	14
5310-188-7721	234	25
5310-188-7721	234	28
5310-188-7721	234	31
5310-188-7721	275	
5310-188-7721	275	
5310-188-7721	276	
5310-188-7721	277	
5310-188-7721	278	
5310-188-7721	KITS	
5310-188-7721	189A	26
5310-188-7723	51	25D
5310-188-7723	62	27
5310-188-7723	75	54
5310-188-7723	117	100
5310-188-7723	117	94
5310-188-7723	119	232
5310-188-7723	239	53
5310-188-7723	251	36A
5310-188-7723	KITS	
5310-188-9810	68	69
5310-188-9811	183A	45
5310-189-6673	183A	44
5310-193-7577	167	19
5310-193-7577	197	10
5310-193-7577	197	12
5310-193-7577	197	33
5310-194-0634	178	103
5310-194-0634	KITS	
5310-194-0637	BULK	
5310-194-9206	192	
5310-194-9209	BULK	
5310-196-6676	262	29
5310-198-4735	62	
5310-199-1028	34	
5310-199-1028	95	105
5310-199-1028	95	48
5310-199-1028	95	58
5310-199-1028	95	80
5310-199-1028	95	97
5310-199-1028	129	102B
5310-199-1028	139	51
5310-199-1028	139	52
5310-199-1028	139	98
5310-199-7416	65	18
5310-205-8010	BULK	
5310-205-8010	KITS	
5310-205-8491	11	26
5310-205-8991	63	2
5310-205-8991	138	15
5310-205-8991	138	23
5310-205-8991	274	30
5310-207-7719	BULK	

STOCK NUMBER	FIGURE NUMBER	ITEM NUMBER
5310-207-9274	49	56A
5310-207-9274	51	73
5310-207-9320	BULK	
5310-207-9364	192	26
5310-208-1920	71	37
5310-208-2395	BULK	
5310-208-3438	160	54
5310-208-3467	188	58
5310-208-3467	204	
5310-208-3468	157	22
5310-208-3468	157	31
5310-208-3468	157	36
5310-208-3468	157	48
5310-208-3468	157	54
5310-208-3468	157	60
5310-208-3468	158	20
5310-208-3468	158	24
5310-208-3468	158	31
5310-208-3468	158	43
5310-208-3468	158	49
5310-208-3468	158	55
5310-208-3468	KITS	
5310-208-3469	157	22
5310-208-3469	157	31
5310-208-3469	157	36
5310-208-3469	157	48
5310-208-3469	157	54
5310-208-3469	157	60
5310-208-3469	158	20
5310-208-3469	158	24
5310-208-3469	158	31
5310-208-3469	158	43
5310-208-3469	158	49
5310-208-3469	158	55
5310-208-3469	KITS	
5310-208-3647	192	82
5310-208-3747	BULK	
5310-208-3755	66	20
5310-208-3755	245	23
5310-208-3786	186A	1
5310-208-4025	BULK	
5310-208-4134	BULK	
5310-208-4135	95	125
5310-208-4135	95	130
5310-208-4135	95	133
5310-208-4135	95	135
5310-208-4135	95	137
5310-208-4135	95	141
5310-208-4135	95	2
5310-208-4135	95	4
5310-208-4135	95	5
5310-208-4736	165	52
5310-208-4736	KITS	
5310-208-5405	72	80
5310-208-5405	74	28
5310-208-5405	219	
5310-208-5405	KITS	
5310-208-5405	219A	151
5310-208-5405	219A	52
5310-208-5769	93	22
5310-208-5769	115	17
5310-208-5769	115	41
5310-208-5769	115	50
5310-208-5769	117	13A
5310-208-5769	119	
5310-208-5769	119	184
5310-208-5769	119	185
5310-208-5769	119	208
5310-208-5775	117	
5310-208-5775	119	264
5310-208-6740	66	8
5310-208-6740	224	4
5310-208-6740	228	22
5310-208-6797	21	
5310-208-6797	72	20
5310-208-6797	72	51
5310-208-6797	72	98
5310-208-6797	73	22
5310-208-6797	74	9
5310-208-6797	222	
5310-208-6797	222	213
5310-208-6797	244	
5310-208-6797	KITS	
5310-208-7144	204A	5A
5310-208-7589	11	45
5310-208-7589	11	46
5310-208-7589	15	33
5310-208-7589	16	30
5310-208-7589	20	
5310-208-7589	20	63
5310-208-7589	22	56
5310-208-7589	25	
5310-208-7589	207	
5310-208-7589	208	22
5310-208-7589	210	21
5310-208-7589	210	59
5310-208-7589	KITS	
5310-208-9255	275	
5310-208-9255	KITS	
5310-209-0026	11	15
5310-209-0026	18	
5310-209-0026	81	143A
5310-209-0026	83	278
5310-209-0026	83	285
5310-209-0026	118	97
5310-209-0026	KITS	
5310-209-0027	81	166A
5310-209-0027	118	6
5310-209-0295	11	79
5310-209-0295	75	16
5310-209-0295	75	20
5310-209-0295	76	1C
5310-209-0295	222	195
5310-209-0295	222	206
5310-209-0295	222	76
5310-209-0295	222	86
5310-209-0295	240	5
5310-209-0295	244	86
5310-209-0295	244	97
5310-209-0295	KITS	
5310-209-1239	228	83
5310-209-1239	228	86
5310-209-1239	275	
5310-209-1510	194	53
5310-209-3445	43	5
5310-209-3573	66	21
5310-209-4097	72	81
5310-209-4097	74	27
5310-209-5392	29	
5310-209-6181	228	127E
5310-209-6442	118	79
5310-209-6442	KITS	
5310-222-0704	BULK	
5310-225-4680	19	
5310-225-4680	BULK	
5310-225-8383	68	68
5310-225-8384	165	18
5310-225-8384	165	58
5310-225-8384	165	85
5310-225-8384	165	98
5310-225-8979	210	25

STOCK NUMBER	FIGURE NUMBER	ITEM NUMBER
5310-226-3911	102	7D
5310-226-3911	103	6B
5310-226-3911	222	137
5310-226-3911	222	144
5310-226-3911	222	33
5310-226-3911	222	34
5310-226-3911	235	4
5310-226-3911	235	7
5310-226-3911	237	20
5310-226-3911	237	48
5310-226-3911	239	115
5310-226-3911	239	129
5310-226-3911	239	95
5310-226-3911	240	18
5310-226-3911	240	26
5310-226-3911	242	7
5310-226-3911	244	19
5310-226-3911	244	20
5310-226-3911	244	28
5310-226-3911	244	29
5310-226-3911	BULK	
5310-226-3911	KITS	
5310-227-4881	50	18
5310-229-6713	76	130A
5310-229-6713	92	14A
5310-229-6713	92	15
5310-229-6713	92	22
5310-229-6713	92	40
5310-229-6713	92	40A
5310-229-6713	92	46
5310-229-6713	92	54
5310-229-6713	92	54A
5310-229-6713	92	63
5310-229-6713	92	70
5310-229-6713	92	70A
5310-229-6713	92	8
5310-229-6713	92	93
5310-229-6713	92	98
5310-229-6713	92	98A
5310-229-6713	KITS	
5310-234-7864	76	164A
5310-243-2259	11	122
5310-243-2259	18	132A
5310-243-2259	18	165B
5310-243-2259	32	76
5310-243-2259	33	58
5310-243-2259	11C	65B
5310-243-2259	222	
5310-245-3612	196	
5310-249-6603	65	74
5310-251-9763	63	40
5310-251-9767	65	26
5310-251-9784	65	53
5310-256-6326	68	72
5310-261-7162	BULK	
5310-262-6217	261	29
5310-263-2862	33	16A
5310-263-2862	33	23A
5310-263-2862	33	26A
5310-263-2862	92	18
5310-263-2862	92	76
5310-263-2862	95	12
5310-263-2862	QC1	52
5310-263-2862	217	3
5310-263-2862	KITS	
5310-263-2862	KITS	
5310-264-1389	262A	4
5310-264-1390	BULK	
5310-264-1395	215	56
5310-268-6022	270	37A
5310-268-6022	KITS	
5310-268-6023	BULK	
5310-268-6023	KITS	
5310-268-6025	BULK	
5310-268-6054	240	
5310-268-6055	75	36
5310-268-6057	66	10
5310-268-6057	66	19
5310-268-6057	BULK	
5310-268-6075	34	32
5310-268-6076	49	50
5310-268-6077	45	29D
5310-268-7313	BULK	
5310-274-4566	43	3
5310-274-9364	81	132
5310-275-0616	34	29
5310-275-0616	34	39
5310-275-0616	115	59
5310-275-0616	KITS	
5310-275-1745	170	2
5310-275-1745	171	2
5310-275-6701	67A	28
5310-275-6715	118	84
5310-275-9211	244	80
5310-275-9211	244	91
5310-275-9211	42B	64
5310-276-1171	267	22
5310-281-8419	BULK	
5310-282-4776	91	2
5310-282-4776	F14	6
5310-282-4776	F16	25
5310-282-4776	KITS	
5310-282-6903	BULK	
5310-282-6907	244	81
5310-282-6907	244	92
5310-282-6907	42B	79
5310-282-7817	251	36
5310-282-7822	129	56A
5310-282-7822	129	77
5310-282-7823	95	155
5310-282-7823	95	157
5310-282-7823	95	160
5310-282-7823	QC1	63
5310-282-7823	109	10
5310-282-7823	109	32
5310-282-7823	110	
5310-282-7823	110	20
5310-282-7823	110	25
5310-282-7823	110	30
5310-282-7823	110	38
5310-282-7823	110	39
5310-282-7823	110	42
5310-282-7823	110	51
5310-282-7823	110	68
5310-282-7823	110	82
5310-282-7823	110	85
5310-282-7823	112	125
5310-282-7823	112	135
5310-282-7823	112	147
5310-282-7823	112	155
5310-282-7823	112	165
5310-282-7823	112	169
5310-282-7823	115	
5310-282-7823	115	1
5310-282-7823	115	10
5310-282-7823	115	11
5310-282-7823	115	13
5310-282-7823	115	15
5310-282-7823	115	19
5310-282-7823	115	22
5310-282-7823	115	26
5310-282-7823	115	3

STOCK NUMBER	FIGURE NUMBER	ITEM NUMBER
5310-282-7823	115	34
5310-282-7823	115	59
5310-282-7823	115	8
5310-282-7823	116	
5310-282-7823	117	
5310-282-7823	117	19I
5310-282-7823	117	25A
5310-282-7823	117	28B
5310-282-7823	119	
5310-282-7823	119	117
5310-282-7823	119	120
5310-282-7823	119	136
5310-282-7823	119	139
5310-282-7823	119	143
5310-282-7823	119	172
5310-282-7823	119	208
5310-282-7823	119	212
5310-282-7823	119	220
5310-282-7823	119	248
5310-282-7823	119	251
5310-282-7823	119	368
5310-282-7823	119	89
5310-282-7823	129	41A
5310-282-7823	129	53
5310-282-7823	129	61A
5310-282-7823	129	81A
5310-282-7823	129	84A
5310-282-7823	135	4
5310-282-7823	139	6
5310-282-7823	139	63
5310-282-7823	178	17
5310-282-7823	178	40
5310-282-7823	179	25A
5310-282-7823	179	9A
5310-282-7823	180	15B
5310-282-7823	180	20B
5310-282-7823	180	25B
5310-282-7823	213	
5310-282-7823	217	
5310-282-7823	221	81
5310-282-7823	257	16A
5310-282-7823	257	18A
5310-282-7823	257	5A
5310-282-7823	257	7A
5310-282-7823	257	9A
5310-282-7823	KITS	
5310-282-7823	217A	11
5310-282-7823	217B	14
5310-282-7825	95	51
5310-282-7832	KITS	
5310-282-7834	117	
5310-282-7834	119	256
5310-282-7834	119	260
5310-282-7834	129	
5310-282-7834	139	33
5310-282-7834	139	81
5310-282-7834	KITS	
5310-282-7835	95	172
5310-282-7835	109	48
5310-282-7835	117	35
5310-282-7835	117	43A
5310-282-7835	117	86
5310-282-7835	117	87
5310-282-7835	119	262
5310-282-7835	129	
5310-282-7835	129	102A
5310-282-7835	129	112A
5310-282-7835	129	39
5310-282-7835	139	30
5310-282-7835	139	31
5310-282-7835	139	78
5310-285-1542	192	
5310-285-2177	71	118
5310-285-2177	76	54
5310-285-2177	223	107
5310-285-2177	42B	17
5310-285-9271	165	6
5310-286-2162	215	2
5310-297-0332	266	8
5310-297-3716	BULK	
5310-297-3719	BULK	
5310-297-3720	BULK	
5310-297-3721	BULK	
5310-297-3722	118	121
5310-297-4085	BULK	
5310-298-2747	280	1
5310-298-7397	29	
5310-298-8165	192	13
5310-298-9267	F20	21
5310-306-3167	20	47
5310-306-3167	45	29E
5310-306-3167	F15	17
5310-306-3167	F15	47
5310-306-3167	F15	49
5310-306-3167	KITS	
5310-337-8329	10	7C
5310-337-8329	14	29
5310-337-8329	KITS	
5310-369-5022	65	73
5310-401-4569	BULK	
5310-402-5711	223	84
5310-403-7031	190A	37
5310-405-0498	68	29
5310-405-4646	68	73
5310-410-2486	190A	44
5310-410-6491	193	69
5310-411-2624	190A	38
5310-411-2625	118	79
5310-419-6544	37B	26
5310-433-1339	42	5
5310-436-1974	194	59
5310-437-8550	BULK	
5310-453-9547	71	126
5310-453-9550	83	2A
5310-455-6881	244	59
5310-455-6881	244	70
5310-455-6881	244	82
5310-455-6881	244	87
5310-455-6881	244	93
5310-455-6881	244	98
5310-460-4088	BULK	
5310-462-3211	62	
5310-465-8950	BULK	
5310-470-5952	81	182B
5310-470-5952	83	319
5310-471-3792	81	182
5310-471-3792	83	318
5310-475-9296	32	58C
5310-487-4160	64A	50
5310-487-5605	170	46
5310-487-5605	171	46
5310-487-8145	62	
5310-488-9137	BULK	
5310-489-8836	BULK	
5310-489-9316	150	7
5310-492-8956	BULK	
5310-497-3895	BULK	
5310-498-7060	67	13
5310-501-1995	42	
5310-501-1995	253	24D
5310-503-6090	194	222
5310-514-1996	67A	71

STOCK NUMBER	FIGURE NUMBER	ITEM NUMBER
5310-515-7449	18	
5310-515-7449	21	24
5310-515-7449	25	12A
5310-515-7449	31	25B
5310-515-7449	66	24
5310-515-7449	66	41
5310-515-7449	89	95
5310-515-7449	97	11B
5310-515-7449	97	17
5310-515-7449	97	4
5310-515-7449	97	7B
5310-515-7449	98	3
5310-515-7449	98	6
5310-515-7449	99	3
5310-515-7449	QC1	
5310-515-7449	QC1	37D
5310-515-7449	QC1	39A
5310-515-7449	218	12C
5310-515-7449	218	8B
5310-515-7449	268	177A
5310-515-7449	270	36A
5310-515-7449	270	39A
5310-515-7449	273	2B
5310-515-7449	273	27
5310-515-7449	284	39
5310-515-7449	285	3
5310-515-7449	42B	34
5310-515-7449	KITS	
5310-515-7449	219A	133
5310-515-7449	219A	140
5310-515-7449	219A	28
5310-515-7449	219A	31
5310-515-8058	20	98
5310-515-8058	37	
5310-515-8058	45	19
5310-515-8058	83	35F
5310-515-8058	92	51C
5310-515-8058	198	
5310-515-8058	209	
5310-515-8058	212	17
5310-515-8058	215	52
5310-515-8058	252	14
5310-515-8058	252	9
5310-515-8058	264	9
5310-515-8058	275	26
5310-515-8716	BULK	
5310-515-8716	KITS	
5310-515-9371	265	160
5310-515-9371	265	162
5310-515-9371	265	168
5310-515-9371	265	227
5310-515-9371	265	229
5310-515-9371	265	27
5310-515-9371	265	42
5310-515-9371	265	44
5310-515-9371	265	70
5310-515-9371	268	
5310-515-9371	268	137A
5310-515-9371	268	42A
5310-515-9371	268	60
5310-515-9371	268	66
5310-516-1542	17	24
5310-522-6503	192	
5310-527-3634	BULK	
5310-527-3821	36A	6
5310-527-3821	36B	8
5310-527-3821	37B	1
5310-527-4477	BULK	
5310-527-4509	66	
5310-527-4509	66	7
5310-527-4509	228	23
5310-530-0120	190	14
5310-530-9963	18	
5310-530-9963	32	55
5310-530-9963	182	
5310-531-1325	204A	12B
5310-531-9514	248	3
5310-531-9515	22	55
5310-531-9515	31	
5310-531-9515	QC1	37C
5310-531-9515	268	179
5310-531-9515	269	15A
5310-531-9515	270	15
5310-531-9515	270	30B
5310-531-9515	270	46
5310-531-9515	42B	34
5310-531-9515	42B	72
5310-531-9515	KITS	
5310-543-2410	26	
5310-543-2410	30	22
5310-543-2410	30	28
5310-543-2410	30	33
5310-543-2410	76	112B
5310-543-2410	160	24
5310-543-2410	160	28
5310-543-2410	190	100
5310-543-2410	190	105
5310-543-2410	190	117
5310-543-2410	190	120
5310-543-2410	190	124
5310-543-2410	190	128
5310-543-2410	190	134
5310-543-2410	190	156
5310-543-2410	190	32
5310-543-2410	190	62
5310-543-2410	190	96
5310-543-2410	192	6
5310-543-2410	193	55
5310-543-2410	193	79
5310-543-2410	193	84
5310-543-2410	193	93
5310-543-2410	194	13
5310-543-2410	194	22
5310-543-2410	194	26
5310-543-2410	194	31
5310-543-2410	194	34
5310-543-2410	194	71
5310-543-2410	197	56
5310-543-2410	197	64
5310-543-2410	205	2A
5310-543-2410	205	28B
5310-543-2410	205	34A
5310-543-2410	212	25
5310-543-2410	215	42
5310-543-2410	232	14
5310-543-2410	232	26
5310-543-2410	67A	12
5310-543-2410	189A	31
5310-543-4842	20	59
5310-543-5010	BULK	
5310-543-5041	42B	37
5310-543-5060	160	40
5310-543-5060	160	52
5310-543-5060	160	64
5310-543-5060	192	91
5310-543-5060	193	51
5310-543-5060	194	46
5310-543-5060	194	8
5310-543-5060	216	75
5310-543-5060	232	32
5310-544-8347	170	64
5310-550-0284	190	108

STOCK NUMBER	FIGURE NUMBER	ITEM NUMBER
5310-550-0284	248	116
5310-550-0284	260	35
5310-550-0286	BULK	
5310-550-2509	BULK	
5310-550-3671	216	71
5310-550-4783	79	12
5310-550-4783	96	2
5310-550-5009	17	
5310-550-5009	33	34F
5310-550-5009	36	26
5310-550-5009	42	
5310-550-5009	45	31B
5310-550-5009	62	
5310-550-5009	157	86
5310-550-5009	182	
5310-550-5009	183	16
5310-550-5009	188	
5310-550-5009	188	10
5310-550-5009	196	21B
5310-550-5009	196	7B
5310-550-5009	204	
5310-550-5009	231	23
5310-550-5009	265	154
5310-550-5009	265	173
5310-550-5009	265	175
5310-550-5009	265	233
5310-550-5009	265	75
5310-550-5009	268	134A
5310-550-5009	268	149D
5310-550-5009	268	45
5310-550-5009	277	
5310-551-6794	BULK	
5310-558-6207	64A	64
5310-558-6207	KITS	
5310-558-9763	239	20
5310-558-9763	KITS	
5310-559-0070	197	44
5310-559-0921	165	28
5310-566-8869	BULK	
5310-569-2930	160	29
5310-571-4176	265	191
5310-571-4176	265	200
5310-571-4176	268	172
5310-571-7024	248	61
5310-573-7616	KITS	
5310-576-0025	183A	32A
5310-576-1304	266	10
5310-576-5752	18	
5310-576-5752	275	
5310-576-7339	190A	
5310-579-0079	192	18
5310-579-0079	260	42
5310-579-0079	260	51
5310-579-0079	260	53
5310-579-0848	11	103
5310-579-0848	16	5
5310-579-1871	190A	21
5310-579-5554	160	31
5310-579-5554	162	18
5310-579-5554	190	113
5310-579-5554	190	45
5310-579-5554	190	59
5310-579-5554	190	86
5310-579-5554	232	18
5310-582-5965	197	39
5310-582-5965	207	
5310-582-5965	210	22
5310-582-5965	210	5
5310-582-5965	210	56
5310-582-5965	210	60
5310-582-5965	210	8
5310-582-5965	275	
5310-582-6055	45	9
5310-582-6055	69	6
5310-582-6055	70	21
5310-582-6055	240	75
5310-582-6058	75	14
5310-582-6058	75	53
5310-582-6058	222	98
5310-582-6058	244	70
5310-582-6058	KITS	
5310-582-8173	222	
5310-582-8173	222	213
5310-582-8173	244	
5310-582-8173	248	60
5310-582-9176	176	24
5310-582-9176	177	23
5310-582-9176	182	
5310-582-9176	184	
5310-582-9176	184	15
5310-584-5275	BULK	
5310-584-5529	BULK	
5310-584-5611	76	28A
5310-584-5611	81	48
5310-584-5611	83	113
5310-584-5627	95	130
5310-585-8627	BULK	
5310-590-8358	50	17
5310-595-6070	160	11
5310-595-6211	137	10
5310-595-6211	183A	81B
5310-595-6425	176	25
5310-595-6425	176	42
5310-595-6425	177	24
5310-595-6425	177	49
5310-595-6425	248	7
5310-595-6425	248	92
5310-595-6425	64A	59
5310-595-6607	44	4
5310-595-6607	45	2
5310-595-6607	KITS	
5310-595-6612	11	77
5310-595-6612	72	39
5310-595-6612	72	71
5310-595-6612	118	
5310-595-6902	213	
5310-595-6902	220	
5310-595-6902	BULK	
5310-595-6902	KITS	
5310-595-7078	11	16
5310-595-7078	11	34
5310-595-7078	18	
5310-595-7078	75	97
5310-595-7079	222	45
5310-595-7079	222	47
5310-595-7079	240	4
5310-595-7079	244	36
5310-595-7079	244	41
5310-595-7237	260	32
5310-595-7468	265	159
5310-595-7468	265	228
5310-595-7468	265	26
5310-595-7468	265	43
5310-595-7468	268	154
5310-595-7468	268	67
5310-596-0769	232	44
5310-596-1712	45	27
5310-596-1712	75	56
5310-596-1766	71	80
5310-596-1766	71	91
5310-596-1766	75	103
5310-596-1766	81	166C

STOCK NUMBER	FIGURE NUMBER	ITEM NUMBER
5310-596-1766	11B	96
5310-596-1766	228	105
5310-596-1766	287	22
5310-596-1766	KITS	
5310-596-1774	43	7
5310-596-2563	21	63
5310-596-4274	157	39
5310-596-4274	158	36
5310-596-4274	KITS	
5310-596-4743	192	71
5310-596-5477	89	27A
5310-596-5477	89	37
5310-596-5819	228	137
5310-596-7102	15	12
5310-596-7102	15	14
5310-596-7102	15	24
5310-596-7718	BULK	
5310-596-7756	BULK	
5310-596-8422	11	106
5310-596-8422	11	50
5310-596-8422	20	
5310-596-8422	20	30
5310-596-8422	20	55
5310-596-8422	119	167
5310-596-8422	222	
5310-596-8422	223	
5310-596-8422	234	2
5310-596-8422	234	23
5310-596-8422	234	40
5310-596-8422	234	49
5310-596-8422	234	5
5310-596-8422	234	52
5310-596-8422	244	
5310-596-8422	KITS	
5310-603-0447	20	12
5310-616-1119	BULK	
5310-616-1124	95	125
5310-616-1124	95	133
5310-616-1124	244	75
5310-616-2973	183	3C
5310-616-2973	183A	76
5310-616-2973	197A	13
5310-616-3648	183A	67
5310-616-6822	191	24
5310-616-6822	194	2
5310-616-6822	194	226
5310-616-6822	195	22
5310-618-4674	31	13C
5310-619-1246	79	16
5310-619-3560	184	16
5310-619-5596	234	19
5310-619-5596	BULK	
5310-619-5596	KITS	
5310-621-3122	BULK	
5310-622-1722	BULK	
5310-623-5989	10	
5310-623-5989	13	32
5310-623-5989	13	62
5310-623-5989	13	83
5310-623-5989	13	97
5310-623-5989	14	30
5310-623-5989	14	46
5310-623-5989	17	
5310-623-5989	17	
5310-623-5989	17	17
5310-623-5989	17	27
5310-623-5989	32	
5310-623-5989	32	80
5310-623-5989	33	
5310-623-5989	69	27
5310-623-5989	95	94B
5310-623-5989	118	
5310-623-5989	228	
5310-623-5989	251	46A
5310-623-5989	270	28B
5310-623-5989	279	
5310-623-5989	284	48
5310-623-5989	287	11
5310-623-5989	42A	
5310-623-5989	428	
5310-623-5989	42C	
5310-623-5989	KITS	
5310-623-5991	BULK	
5310-626-7582	83	350
5310-631-1294	BULK	
5310-632-1260	BULK	
5310-637-2265	20	73
5310-637-9541	196	
5310-637-9541	207	
5310-637-9541	210	29
5310-637-9541	210	32
5310-638-0207	21	
5310-638-2605	QC1	123
5310-638-2605	109	18
5310-638-2605	109	20
5310-638-2605	109	23
5310-638-2605	109	27
5310-638-2605	109	29
5310-638-2605	109	35
5310-638-2605	109	38
5310-638-2605	109	70
5310-638-2605	109	73
5310-638-2605	109	74
5310-638-2605	109	8
5310-638-2605	109	86
5310-638-2605	110	34
5310-638-2605	110	35
5310-638-2605	110	64
5310-638-2605	110	80
5310-638-2605	110	84
5310-638-2605	112	62
5310-638-2605	115	55
5310-638-2605	115	57
5310-638-2605	116	
5310-638-2605	117	
5310-638-2605	117	100
5310-638-2605	117	19D
5310-638-2605	117	58E
5310-638-2605	117	91
5310-638-2605	117	94
5310-638-2605	117	98
5310-638-2605	119	233
5310-638-2605	119	238
5310-638-2605	119	240
5310-638-2605	119	243
5310-638-2605	129	35A
5310-638-2605	129	37
5310-638-2605	129	41C
5310-638-2605	129	68A
5310-638-2605	139	
5310-638-2605	139	105
5310-638-2605	139	108
5310-638-2605	139	13
5310-638-2605	139	15
5310-638-2605	139	18
5310-638-2605	139	27
5310-638-2605	139	28
5310-638-2605	139	43
5310-638-2605	139	47
5310-638-2605	139	59
5310-638-2605	139	67
5310-638-2605	139	74

STOCK NUMBER	FIGURE NUMBER	ITEM NUMBER	STOCK NUMBER	FIGURE NUMBER	ITEM NUMBER
5310-638-2605	139	8	5310-660-3381	235	14
5310-638-2605	139	95	5310-660-3381	245	10
5310-638-2605	143	32	5310-660-3381	246	
5310-638-2605	178	130	5310-660-3381	264	10
5310-638-2605	178	37	5310-670-3347	BULK	
5310-638-2605	178	79	5310-670-3368	42	
5310-638-2605	213		5310-670-3369	BULK	
5310-638-2605	220		5310-670-4428	BULK	
5310-638-2605	221	105	5310-678-8589	81	2
5310-638-2605	221	130	5310-678-8589	83	1A
5310-638-2605	221	133	5310-678-9511	134	64
5310-638-2605	221	135	5310-678-9772	258	7A
5310-638-2605	221	19	5310-678-9778	BULK	
5310-638-2605	221	22	5310-678-9804	BULK	
5310-638-2605	221	25	5310-678-9859	BULK	
5310-638-2605	221	37	5310-678-9862	BULK	
5310-638-2605	221	59	5310-678-9863	BULK	
5310-638-2605	221	63	5310-678-9956	BULK	
5310-638-2605	221	66	5310-678-9958	BULK	
5310-638-2605	221	7	5310-680-4984	BULK	
5310-638-2605	221	79	5310-680-4985	196	26
5310-638-2605	221	89	5310-680-4985	204	1E
5310-638-2605	221	95	5310-680-5210	11	29
5310-638-2605	273	10A	5310-680-6275	286	26
5310-638-2605	KITS		5310-680-6275	37A	104
5310-638-9857	228	147A	5310-680-6279	56	11
5310-638-9857	248	12	5310-680-6287	42A	25
5310-639-2583	160	42	5310-680-6287	42C	26
5310-639-7435	62	7D	5310-680-6627	188	
5310-639-7435	249	12	5310-680-6627	228	
5310-639-7435	249	9	5310-680-6627	BULK	
5310-641-5245	171	50	5310-680-7296	284	11
5310-650-1147	215	22	5310-680-7296	285	51
5310-655-5885	BULK		5310-680-7296	285	8
5310-655-5886	BULK		5310-680-7296	286	2
5310-655-6930	228		5310-680-7296	287	2
5310-655-6930	228	83	5310-680-7296	190A	22
5310-655-6930	228	85	5310-680-7855	56	12
5310-655-6930	BULK		5310-685-1499	55	14
5310-655-7219	287	27	5310-685-2448	225	27
5310-655-9886	138	11	5310-685-3228	188	
5310-655-9886	228	29A	5310-685-3744	34	
5310-655-9886	228	38	5310-685-3744	248	18
5310-655-9886	KITS		5310-685-3744	248	37
5310-659-8986	11A	35	5310-685-7980	183	19
5310-659-8986	11A	50	5310-685-8081	186	9
5310-660-2215	20	71	5310-687-7691	186	2
5310-660-2215	72	27	5310-688-1998	BULK	
5310-660-2215	72	58	5310-689-8195	75	165
5310-660-2215	73	2	5310-689-8195	76	164A
5310-660-2215	74	16	5310-689-8195	81	182
5310-660-2215	228	140	5310-689-8195	83	318
5310-660-2215	228	144	5310-689-8195	92	5
5310-660-2215	253	45A	5310-689-8195	11C	50
5310-660-2215	KITS		5310-689-8195	KITS	
5310-660-3372	182		5310-689-8195	KITS	
5310-660-3381	11	108	5310-690-3814	BULK	
5310-660-3381	21	61A	5310-706-0976	258	9A
5310-660-3381	22	12B	5310-708-7675	28	
5310-660-3381	22	19B	5310-714-5971	BULK	
5310-660-3381	22	36	5310-720-8296	62	7G
5310-660-3381	22	9B	5310-720-9271	180	41
5310-660-3381	25	25	5310-721-4434	21	23B
5310-660-3381	25	29A	5310-721-4434	KITS	
5310-660-3381	33		5310-722-4162	160	14
5310-660-3381	33	10A	5310-722-4162	160	60
5310-660-3381	59	7	5310-722-4162	160	67
5310-660-3381	71	11	5310-722-4162	160	84
5310-660-3381	QC1		5310-722-4162	160	87
5310-660-3381	QC1	2A	5310-722-5998	221A	7
5310-660-3381	229	5	5310-723-3870	11	14

STOCK NUMBER	FIGURE NUMBER	ITEM NUMBER
5310-723-3870	11	30
5310-723-3870	89	77
5310-723-3870	11B	12
5310-723-3870	11B	2
5310-723-3870	KITS	
5310-724-5719	215	2
5310-725-3806	230	49
5310-725-9638	134	60
5310-727-8353	189A	37
5310-728-0938	BULK	
5310-728-3476	BULK	
5310-728-5502	69	33
5310-728-5510	BULK	
5310-728-5519	BULK	
5310-730-9523	BULK	
5310-731-7415	134	14
5310-734-1850	BULK	
5310-734-1859	42B	
5310-734-5761	BULK	
5310-738-6160	28	24W
5310-738-6160	88	90
5310-738-6160	89	128A
5310-738-6160	KITS	
5310-753-4000	13	97
5310-753-4000	14	25
5310-753-4000	14	31
5310-753-4000	14	36
5310-753-4000	14	45
5310-753-4000	14	47
5310-753-4000	14	50
5310-753-4000	20	74
5310-753-4394	20	66
5310-754-1686	284	4
5310-754-1686	286	19
5310-754-1686	287	20
5310-754-1834	57	13
5310-754-1834	58	12
5310-754-4241	66	20A
5310-754-4606	165	11
5310-754-4606	165	14
5310-754-4606	165	4
5310-758-5731	37	
5310-758-5732	37	
5310-761-3828	148	22
5310-761-4221	BULK	
5310-764-0972	81	189
5310-764-2391	BULK	
5310-764-3774	83	21E
5310-764-7271	184	
5310-764-7273	184	50
5310-767-3800	265	108
5310-767-3800	268	110
5310-769-3630	BULK	
5310-770-3851	BULK	
5310-770-3856	BULK	
5310-770-3881	BULK	
5310-770-7981	96	3
5310-771-7359	BULK	
5310-772-3720	13	97
5310-774-8419	272	15
5310-775-2567	BULK	
5310-775-2622	BULK	
5310-776-1461	244	82
5310-777-5786	BULK	
5310-777-5789	BULK	
5310-777-5793	11	139
5310-777-5793	13	10
5310-777-5793	13	40
5310-777-5793	13	66
5310-777-5793	13	91
5310-777-5793	18	
5310-777-5793	18	108
5310-777-5793	18	59
5310-777-5793	18	66
5310-777-5793	91	88
5310-777-5793	11A	25A
5310-777-5793	11A	43
5310-777-5793	11A	56
5310-777-5793	11A	73
5310-777-5793	11B	
5310-777-5793	KITS	
5310-777-5795	BULK	
5310-778-9478	BULK	
5310-778-9480	10	
5310-778-9480	32	81
5310-778-9508	BULK	
5310-778-9511	31	
5310-778-9514	BULK	
5310-779-3601	BULK	
5310-779-6585	BULK	
5310-779-6619	BULK	
5310-780-1041	BULK	
5310-780-1044	BULK	
5310-780-1243	178	115
5310-780-5901	65	70
5310-780-6351	BULK	
5310-780-6358	BULK	
5310-780-6362	BULK	
5310-780-6373	BULK	
5310-781-1289	153	1
5310-781-3951	87	10
5310-781-3951	87	13
5310-781-3951	87	16
5310-781-3951	92	1A
5310-781-3951	92	59
5310-781-3951	KITS	
5310-781-9388	72	6
5310-781-9388	KITS	
5310-781-9493	BULK	
5310-782-1349	18	
5310-782-1349	64	8
5310-782-1349	268	195C
5310-782-8247	75	100
5310-782-8247	75	94
5310-782-8247	81	143
5310-782-8247	83	277
5310-782-8247	83	284
5310-783-4174	33	
5310-784-8145	10	
5310-784-8145	69	25
5310-784-8145	284	18
5310-784-8145	285	15
5310-784-8146	11	130
5310-784-8146	284	37
5310-784-8146	285	56
5310-785-1755	62	9
5310-785-1755	66	28
5310-785-1755	228	27
5310-785-1755	KITS	
5310-786-8797	BULK	
5310-792-3329	71	111B
5310-799-6288	190	33
5310-800-0695	260	28
5310-800-0695	280	14
5310-801-4684	BULK	
5310-802-1268	11B	
5310-802-4701	BULK	
5310-803-2598	62	
5310-803-2598	QC1	26
5310-803-2598	11B	1
5310-803-2598	KITS	
5310-804-0075	BULK	

STOCK NUMBER	FIGURE NUMBER	ITEM NUMBER
5310-804-0141	183A	62
5310-806-1831	34	27
5310-806-2189	81	137
5310-806-2189	83	268
5310-807-1465	100	24
5310-807-1465	190	4
5310-807-1465	190	7
5310-807-1465	196	51A
5310-807-1465	275	
5310-807-1465	KITS	
5310-807-1465	182A	28
5310-807-1466	18	
5310-807-1466	34	
5310-807-1466	37	45
5310-807-1466	45	19
5310-807-1466	188	
5310-807-1466	191	3
5310-807-1466	191	36
5310-807-1466	196	10A
5310-807-1466	196	7A
5310-807-1466	198	
5310-807-1466	209	
5310-807-1466	228	129D
5310-807-1466	251	58B
5310-807-1466	253	4B
5310-807-1466	253	41
5310-807-1466	255	2A
5310-807-1466	268	158A
5310-807-1466	268	202
5310-807-1466	276	
5310-807-1466	279	
5310-807-1466	KITS	
5310-807-1466	189A	2
5310-807-1467	15	10
5310-807-1467	15	3A
5310-807-1467	16	47
5310-807-1467	18	
5310-807-1467	20	11
5310-807-1467	20	18
5310-807-1467	20	36
5310-807-1467	20	41
5310-807-1467	20	5
5310-807-1467	20	70
5310-807-1467	20	80
5310-807-1467	20	93
5310-807-1467	25	8
5310-807-1467	31	
5310-807-1467	31	
5310-807-1467	31	20B
5310-807-1467	32	
5310-807-1467	32	34
5310-807-1467	32	40
5310-807-1467	32	53
5310-807-1467	34	
5310-807-1467	36	
5310-807-1467	44	11C
5310-807-1467	45	21
5310-807-1467	47	1
5310-807-1467	59	
5310-807-1467	62	
5310-807-1467	63	37
5310-807-1467	73	44A
5310-807-1467	76	179C
5310-807-1467	76	55B
5310-807-1467	76	72A
5310-807-1467	76	72D
5310-807-1467	95	149
5310-807-1467	109	
5310-807-1467	110	71
5310-807-1467	115	
5310-807-1467	116	
5310-807-1467	117	
5310-807-1467	119	
5310-807-1467	119	22
5310-807-1467	119	33
5310-807-1467	119	48
5310-807-1467	129	
5310-807-1467	135	1
5310-807-1467	138	10
5310-807-1467	139	
5310-807-1467	143	
5310-807-1467	178	127
5310-807-1467	178	148
5310-807-1467	179	47
5310-807-1467	182	
5310-807-1467	184	4
5310-807-1467	188	
5310-807-1467	188	42
5310-807-1467	188	49B
5310-807-1467	188	52A
5310-807-1467	191	39
5310-807-1467	191	41
5310-807-1467	191	7
5310-807-1467	191	9
5310-807-1467	196	
5310-807-1467	196	37
5310-807-1467	196	49A
5310-807-1467	198	
5310-807-1467	198	
5310-807-1467	198	23
5310-807-1467	198	28
5310-807-1467	204	
5310-807-1467	204	25
5310-807-1467	207	
5310-807-1467	207	
5310-807-1467	209	
5310-807-1467	213	
5310-807-1467	220	
5310-807-1467	223	47
5310-807-1467	226	20
5310-807-1467	228	56
5310-807-1467	228	81
5310-807-1467	228	89
5310-807-1467	230	6
5310-807-1467	231	4
5310-807-1467	249	20
5310-807-1467	253	44A
5310-807-1467	255	1
5310-807-1467	255	10
5310-807-1467	255	16
5310-807-1467	255	4A
5310-807-1467	256	13
5310-807-1467	259	15E
5310-807-1467	259	6C
5310-807-1467	263	23
5310-807-1467	268	182
5310-807-1467	270	2A
5310-807-1467	270	61D
5310-807-1467	273	11C
5310-807-1467	273	18C
5310-807-1467	273	30
5310-807-1467	KITS	
5310-807-1468	51	3
5310-807-1468	212	11
5310-807-1468	268	12
5310-807-1468	268	209A
5310-807-1468	268	229
5310-807-1468	268	241
5310-807-1468	268	265
5310-807-1468	268	32
5310-807-1468	268	5
5310-807-1468	285	29

STOCK NUMBER	FIGURE NUMBER	ITEM NUMBER
5310-807-1471	210	81
5310-807-1471	210	98
5310-807-1472	210	13
5310-807-1472	210	14
5310-807-1472	210	20
5310-807-1472	210	73
5310-807-1472	210	78
5310-807-1472	210	84
5310-807-1472	210	86
5310-807-1472	210	95
5310-807-1473	210	42
5310-807-1474	18	161B
5310-807-1474	51	35
5310-807-1474	51	38
5310-807-1474	53	26A
5310-807-1474	53	31
5310-807-1474	54	13
5310-807-1474	54	22
5310-807-1474	210	16
5310-807-1474	210	2
5310-807-1474	210	67
5310-807-1474	265	101
5310-807-1474	268	127
5310-807-1474	KITS	
5310-807-1475	33	35
5310-807-1475	287	19
5310-807-1475	KITS	
5310-807-1476	BULK	
5310-807-1477	BULK	
5310-807-2513	BULK	
5310-808-1167	247	25
5310-808-9706	82	30
5310-809-3078	265	302
5310-809-3078	265	310
5310-809-3078	268	262
5310-809-4058	197A	17
5310-809-4061	60	43
5310-809-4061	61	45
5310-809-7632	240	
5310-810-1786	BULK	
5310-810-8956	20	
5310-810-8956	62	
5310-810-8956	118	98
5310-810-8956	KITS	
5310-811-3494	195	
5310-811-3494	195	32
5310-811-3494	198	
5310-811-3494	264	8
5310-811-3494	275	27
5310-811-6419	182	
5310-811-6419	268	195D
5310-812-5645	67A	26
5310-813-3232	284	38
5310-813-3232	286	22
5310-813-3232	287	23
5310-813-3233	284	7
5310-813-3233	285	11
5310-813-3233	286	5
5310-813-3233	287	5
5310-813-3653	269	15
5310-813-6950	204A	125
5310-813-6950	204A	158
5310-813-6950	204A	169
5310-813-9076	186	12
5310-813-9076	186	16
5310-813-9076	186	5
5310-814-6655	76	164A
5310-814-7740	BULK	
5310-815-8833	183	32
5310-816-1879	284	10
5310-816-1879	286	1
5310-816-1879	287	23
5310-816-1879	64A	47
5310-816-1879	64A	69
5310-816-3504	70	
5310-819-0527	262	39
5310-820-1560	28	24Q
5310-820-1560	KITS	
5310-820-3021	107	13A
5310-820-6653	BULK	
5310-821-0111	BULK	
5310-821-1934	81	149A
5310-821-2776	BULK	
5310-824-1607	BULK	
5310-824-2325	228	129D
5310-829-8348	122	19
5310-829-8348	122	35
5310-829-8348	130	23
5310-834-2260	89	102
5310-834-7420	284	8
5310-834-7420	285	12
5310-834-7420	286	6
5310-834-7420	287	6
5310-837-4327	89	110
5310-837-5856	BULK	
5310-838-0264	45	12
5310-838-0265	239	91
5310-838-0265	244	76
5310-838-0265	KITS	
5310-838-2010	216	70B
5310-839-2017	20	
5310-839-7104	34	33
5310-840-6200	15	31E
5310-840-6200	16	27
5310-842-1288	BULK	
5310-843-7119	71	38
5310-843-8924	71	12A
5310-843-8927	71	50
5310-844-2394	BULK	
5310-844-3302	62	45
5310-844-3302	62	49
5310-844-3302	QC1	150A
5310-844-3302	QC1	152A
5310-844-3302	285	53
5310-844-3302	KITS	
5310-845-0954	87	33
5310-845-2359	183A	17
5310-845-2359	204A	11
5310-845-2359	204A	119
5310-845-2359	204A	7
5310-845-7769	BULK	
5310-846-6546	BULK	
5310-847-1075	228	129B
5310-847-2229	81	140
5310-847-2229	83	272
5310-849-7028	BULK	
5310-849-7029	BULK	
5310-849-7858	90	10
5310-849-7858	90	10A
5310-849-7858	90	2
5310-849-7979	69	1A
5310-849-7979	70	15A
5310-849-8920	235	11
5310-849-8920	240	29
5310-850-8674	192	
5310-852-0800	BULK	
5310-852-1115	BULK	
5310-853-4439	BULK	
5310-853-4859	10	
5310-853-9352	BULK	
5310-853-9357	BULK	
5310-856-0587	81	179

STOCK NUMBER	FIGURE NUMBER	ITEM NUMBER	STOCK NUMBER	FIGURE NUMBER	ITEM NUMBER
5310-856-0587	83	185	5310-873-8038	72	75
5310-856-0589	81	159	5310-873-8038	KITS	
5310-856-0590	81	161	5310-874-3233	67A	36
5310-856-0591	81	177	5310-877-1612	14	35
5310-856-0591	83	330	5310-877-1612	14	49
5310-856-6168	51	7	5310-877-1612	KITS	
5310-857-4948	55	13	5310-877-4932	QC1	169
5310-857-4948	69	18	5310-877-4932	259	13
5310-857-4948	70	10	5310-877-4942	51	62B
5310-857-4948	QC1	173	5310-877-5622	157	73
5310-857-4948	KITS		5310-877-5795	11	40
5310-857-4959	BULK		5310-877-5795	11	41
5310-857-4960	21		5310-877-5795	72	7
5310-857-4960	21	27D	5310-877-5795	240	102
5310-857-5548	157	87	5310-877-5795	KITS	
5310-857-5557	83	119	5310-877-5796	11	45
5310-857-5557	91	7	5310-877-5796	11	46
5310-857-5557	92	30	5310-877-5796	21	49A
5310-857-5557	92	84	5310-877-5796	22	54
5310-857-5557	93	11	5310-877-5796	33	3
5310-857-5557	93	4	5310-877-5796	37	1
5310-857-5557	93	6	5310-877-5796	37	14
5310-857-5557	118		5310-877-5796	44	12
5310-857-5557	KITS		5310-877-5796	61	23
5310-857-5559	22	43A	5310-877-5796	75	5
5310-857-5559	83	277	5310-877-5796	119	376
5310-857-5559	83	284	5310-877-5796	207	
5310-857-5559	91	10	5310-877-5796	211	13
5310-857-5559	F20	13	5310-877-5796	211	18
5310-857-5559	KITS		5310-877-5796	213	
5310-857-5562	BULK		5310-877-5796	219	
5310-857-5564	BULK		5310-877-5796	220	
5310-857-5976	83	291	5310-877-5796	222	
5310-857-5976	91	10	5310-877-5796	262	1
5310-861-9282	182A	10	5310-877-5796	265	301
5310-861-9282	182A	5	5310-877-5796	KITS	
5310-863-1210	73	51	5310-877-5797	10	
5310-863-1216	72	34	5310-877-5797	13	12
5310-863-1216	72	65	5310-877-5797	13	90
5310-863-1216	73	10	5310-877-5797	21	49
5310-863-1218	73	26	5310-877-5797	26	9
5310-863-1222	91	19	5310-877-5797	28	38
5310-863-1227	72	13	5310-877-5797	31	19
5310-863-1229	76	137	5310-877-5797	34	
5310-863-1229	83	199	5310-877-5797	36	
5310-863-1230	76	171	5310-877-5797	42	
5310-863-1231	76	64	5310-877-5797	45	11A
5310-863-1231	76	90	5310-877-5797	60	12
5310-863-1236	270	42	5310-877-5797	F17	29
5310-864-5872	BULK		5310-877-5797	100	5
5310-865-5518	59	33	5310-877-5797	110	
5310-865-8471	44	16	5310-877-5797	112	77
5310-865-9359	44	25G	5310-877-5797	117	
5310-865-9359	45	13B	5310-877-5797	119	
5310-865-9592	21		5310-877-5797	119	380
5310-869-1018	207		5310-877-5797	119	94
5310-870-0752	67A	24	5310-877-5797	167	24
5310-871-8758	222	161	5310-877-5797	178	107
5310-871-8758	222	191	5310-877-5797	182	
5310-871-8758	222	202	5310-877-5797	188	
5310-871-8758	222	56	5310-877-5797	195	
5310-871-8758	222	72	5310-877-5797	195	24
5310-871-8758	222	85	5310-877-5797	195	28
5310-871-8758	244	50	5310-877-5797	195	50
5310-871-8758	244	54	5310-877-5797	195	6
5310-871-8758	244	65	5310-877-5797	198	
5310-871-8758	244	82	5310-877-5797	198	23
5310-871-8758	244	93	5310-877-5797	198	28
5310-871-8758	KITS		5310-877-5797	204	
5310-871-8774	45	29F	5310-877-5797	204	25
5310-872-6132	49	14	5310-877-5797	207	

STOCK NUMBER	FIGURE NUMBER	ITEM NUMBER	STOCK NUMBER	FIGURE NUMBER	ITEM NUMBER
5310-877-5797	207		5310-899-0194	92	10
5310-877-5797	207		5310-899-0194	92	14B
5310-877-5797	208	33	5310-899-0194	92	15A
5310-877-5797	223	70	5310-899-0194	92	24
5310-877-5797	229	4	5310-899-0194	92	41
5310-877-5797	251	20	5310-899-0194	92	41A
5310-877-5797	251	9	5310-899-0194	92	47
5310-877-5797	261	18	5310-899-0194	92	55
5310-877-5797	264	3A	5310-899-0194	92	55A
5310-877-5797	274	11	5310-899-0194	92	65
5310-877-5797	275		5310-899-0194	92	71
5310-877-5797	36A	28	5310-899-0194	92	71A
5310-877-5797	36A	32	5310-899-0194	92	94
5310-877-5797	36A	38	5310-899-0194	92	99
5310-877-5797	36A	39	5310-899-0194	92	99A
5310-877-5797	36B		5310-899-2017	138	55
5310-877-5797	BULK		5310-901-0037	62	
5310-877-5797	KITS		5310-901-0037	62	51
5310-877-5798	34		5310-901-0037	QC1	154
5310-878-3292	68	19	5310-901-1171	45	26
5310-878-3292	68	21	5310-901-2588	267	11
5310-878-5560	BULK		5310-901-5607	71	130
5310-878-7196	68	42	5310-901-9238	11	19
5310-878-9518	183A	26	5310-902-6676	11	39
5310-878-9518	204A	122	5310-902-6676	11	61A
5310-878-9518	204A	129	5310-902-6676	15	45B
5310-878-9518	204A	21	5310-902-6676	17	22
5310-880-2612	63	38	5310-902-6676	18	
5310-880-4518	45	12	5310-902-6676	28	
5310-881-0715	76		5310-902-6676	28	14D
5310-882-0321	67A	25	5310-902-6676	33	10B
5310-883-2957	212	21	5310-902-6676	42	
5310-883-4456	102	60	5310-902-6676	62	79
5310-883-4456	103	53	5310-902-6676	95	107
5310-883-4457	102	56	5310-902-6676	95	108
5310-883-4457	103	49	5310-902-6676	95	110
5310-884-3977	20	4	5310-902-6676	95	123
5310-885-8717	81	138	5310-902-6676	95	13
5310-885-8717	83	269	5310-902-6676	95	139
5310-885-8719	51	6	5310-902-6676	95	140
5310-887-4695	44	14A	5310-902-6676	95	161
5310-889-2549	BULK		5310-902-6676	95	163
5310-889-2589	BULK		5310-902-6676	95	41
5310-889-2589	KITS		5310-902-6676	95	44
5310-891-1805	BULK		5310-902-6676	95	49
5310-891-4698	72	44	5310-902-6676	95	52
5310-891-4698	KITS		5310-902-6676	95	57
5310-891-8399	248	105	5310-902-6676	95	7
5310-893-2734	BULK		5310-902-6676	95	71
5310-893-3286	71	5	5310-902-6676	95	75
5310-894-3638	183A	15	5310-902-6676	95	82
5310-894-3638	183A	7	5310-902-6676	95	83
5310-894-8416	253	30E	5310-902-6676	95	85
5310-895-6233	21		5310-902-6676	95	86
5310-895-6345	11	104	5310-902-6676	95	88
5310-895-6345	11	84A	5310-902-6676	95	90
5310-895-6345	11	96	5310-902-6676	95	91
5310-895-6791	83	144	5310-902-6676	95	99
5310-895-6791	83	340	5310-902-6676	F16	4
5310-895-6792	83	241	5310-902-6676	F16	47
5310-895-6793	83	311	5310-902-6676	QC1	
5310-895-6795	83	312	5310-902-6676	QC1	157A
5310-895-9442	83	275	5310-902-6676	100	15
5310-897-3569	BULK		5310-902-6676	100	8
5310-898-0098	75	27	5310-902-6676	110	36A
5310-898-0099	75	31	5310-902-6676	110	37A
5310-898-9588	BULK		5310-902-6676	110	40A
5310-898-9697	248	114A	5310-902-6676	110	46A
5310-898-9698	BULK		5310-902-6676	110	54
5310-898-9699	20		5310-902-6676	110	57
5310-899-0194	76	130B	5310-902-6676	110	63

STOCK NUMBER	FIGURE NUMBER	ITEM NUMBER	STOCK NUMBER	FIGURE NUMBER	ITEM NUMBER
5310-902-6676	110	66	5310-902-6676	221	6
5310-902-6676	110	74	5310-902-6676	221	68
5310-902-6676	110	75	5310-902-6676	221	72
5310-902-6676	110	76	5310-902-6676	221	75
5310-902-6676	110	89	5310-902-6676	221	78
5310-902-6676	112	10	5310-902-6676	221	83
5310-902-6676	112	105	5310-902-6676	221	88
5310-902-6676	112	106	5310-902-6676	223	113
5310-902-6676	112	108	5310-902-6676	228	28
5310-902-6676	112	109	5310-902-6676	228	37
5310-902-6676	112	110	5310-902-6676	229	10
5310-902-6676	112	113	5310-902-6676	229	17
5310-902-6676	112	116	5310-902-6676	245	13
5310-902-6676	112	17	5310-902-6676	245	15
5310-902-6676	112	20	5310-902-6676	251	1
5310-902-6676	112	26	5310-902-6676	253	
5310-902-6676	112	28	5310-902-6676	253	1A
5310-902-6676	112	32	5310-902-6676	253	12
5310-902-6676	112	37	5310-902-6676	255	
5310-902-6676	112	4	5310-902-6676	256	19C
5310-902-6676	112	41	5310-902-6676	257	10D
5310-902-6676	112	45	5310-902-6676	257	22G
5310-902-6676	112	5	5310-902-6676	258	7A
5310-902-6676	112	57	5310-902-6676	275	
5310-902-6676	112	61	5310-902-6676	36A	11
5310-902-6676	112	63	5310-902-6676	36B	13
5310-902-6676	112	69	5310-902-6676	37B	12
5310-902-6676	112	9	5310-902-6676	37B	36
5310-902-6676	112	91	5310-902-6676	37B	43
5310-902-6676	115		5310-902-6676	KITS	
5310-902-6676	116		5310-902-6676	217A	13
5310-902-6676	129		5310-902-6676	217A	15
5310-902-6676	129	23	5310-902-6676	217A	23
5310-902-6676	129	23E	5310-902-6676	217A	6
5310-902-6676	139	100	5310-902-6676	217A	7
5310-902-6676	139	102	5310-902-6676	217B	10
5310-902-6676	139	114	5310-902-6676	217B	16
5310-902-6676	143		5310-902-6676	217B	17
5310-902-6676	178	69	5310-902-6676	217B	2
5310-902-6676	204	6	5310-902-6676	217B	24
5310-902-6676	206	7	5310-902-6676	217B	27
5310-902-6676	206	9	5310-902-6676	217B	28
5310-902-6676	208		5310-902-6676	217B	3
5310-902-6676	213		5310-902-6676	217B	5
5310-902-6676	217		5310-902-6676	217B	6
5310-902-6676	218		5310-902-6676	219A	179
5310-902-6676	218	74C	5310-902-6676	219A	184
5310-902-6676	219		5310-902-6676	219A	74
5310-902-6676	220		5310-902-6676	219A	84
5310-902-6676	221		5310-902-7846	60	42
5310-902-6676	221	10	5310-902-7846	61	44
5310-902-6676	221	102	5310-902-7846	BULK	
5310-902-6676	221	107	5310-902-9369	11	41
5310-902-6676	221	111	5310-902-9369	11	91
5310-902-6676	221	113	5310-902-9369	53	1
5310-902-6676	221	114	5310-902-9369	11B	35
5310-902-6676	221	116	5310-902-9369	238	61
5310-902-6676	221	119	5310-902-9369	240	101
5310-902-6676	221	120	5310-902-9369	252	2
5310-902-6676	221	128	5310-902-9369	264	13A
5310-902-6676	221	13	5310-902-9369	270	13A
5310-902-6676	221	130	5310-902-9369	270	20A
5310-902-6676	221	138	5310-902-9369	270	23A
5310-902-6676	221	18	5310-902-9369	270	41
5310-902-6676	221	21	5310-903-8282	15	17A
5310-902-6676	221	23	5310-903-8282	15	21A
5310-902-6676	221	31	5310-903-8282	15	27A
5310-902-6676	221	40	5310-903-8282	15	43
5310-902-6676	221	42	5310-903-8282	15	6
5310-902-6676	221	55	5310-903-8282	15	8B
5310-902-6676	221	58	5310-903-8282	18	

STOCK NUMBER	FIGURE NUMBER	ITEM NUMBER
5310-903-8282	18	69
5310-903-8282	18	73
5310-903-8282	20	
5310-903-8282	20	25
5310-903-8282	20	34
5310-903-8282	20	36
5310-903-8282	20	44
5310-903-8282	20	59
5310-903-8282	21	82
5310-903-8282	21	89
5310-903-8282	22	25C
5310-903-8282	22	5C
5310-903-8282	25	12
5310-903-8282	25	16A
5310-903-8282	25	2A
5310-903-8282	25	34
5310-903-8282	31	25A
5310-903-8282	36	11A
5310-903-8282	36	12B
5310-903-8282	36	18A
5310-903-8282	36	9
5310-903-8282	62	
5310-903-8282	62	56
5310-903-8282	66	23
5310-903-8282	66	40
5310-903-8282	71	40
5310-903-8282	71	44
5310-903-8282	71	48
5310-903-8282	QC1	32A
5310-903-8282	QC1	32B
5310-903-8282	QC1	39
5310-903-8282	QC1	46
5310-903-8282	11A	15
5310-903-8282	188	
5310-903-8282	197	66
5310-903-8282	209	
5310-903-8282	228	42
5310-903-8282	257	19E
5310-903-8282	265	183
5310-903-8282	265	2
5310-903-8282	265	273
5310-903-8282	265	50
5310-903-8282	265	61
5310-903-8282	265	63
5310-903-8282	268	176
5310-903-8282	268	181
5310-903-8282	268	207
5310-903-8282	270	
5310-903-8282	270	30A
5310-903-8282	270	32A
5310-903-8282	273	17
5310-903-8282	273	2A
5310-903-8282	273	21
5310-903-8282	273	26
5310-903-8282	275	
5310-903-8282	37B	19
5310-903-8282	37B	32
5310-903-8282	42A	9
5310-903-8282	42B	30
5310-903-8282	42C	10
5310-903-8282	KITS	
5310-905-3081	18	
5310-905-3081	18	
5310-905-3081	213	
5310-905-3081	265	34
5310-905-3081	268	50
5310-905-3081	KITS	
5310-905-5454	183	
5310-905-5454	183	3B
5310-905-5454	187	21
5310-905-5454	183A	74
5310-905-5454	183A	78
5310-905-8434	28	
5310-905-8434	62	
5310-905-8434	182	
5310-905-8434	188	
5310-905-8434	188	60
5310-905-8434	193	62
5310-905-8434	196	14
5310-905-8434	BULK	
5310-905-8434	KITS	
5310-905-8451	157	12
5310-905-8451	157	68
5310-905-8451	157	76
5310-905-8451	157	91
5310-905-8451	158	13
5310-905-8451	158	68
5310-905-8451	158	77
5310-905-8451	182	
5310-905-8451	188	
5310-905-8451	188	47A
5310-905-8451	196	13A
5310-905-8451	196	28
5310-905-8451	196	30
5310-905-8451	196	34A
5310-905-8451	196	55A
5310-905-8451	197	40
5310-905-8451	200	
5310-906-9971	226	27
5310-906-9971	42B	25
5310-907-8382	91	1
5310-910-3223	274	10
5310-911-3911	49	11A
5310-913-0566	83	254
5310-913-0566	89	2
5310-913-0566	89	66
5310-913-0566	KITS	
5310-913-1600	268	210
5310-913-4117	73	44L
5310-914-3290	BULK	
5310-914-6545	165	69
5310-914-6545	165	72
5310-914-6545	165	77
5310-915-7965	BULK	
5310-915-7970	BULK	
5310-915-7973	BULK	
5310-915-7985	BULK	
5310-917-3848	138	60
5310-919-3476	223	51
5310-919-4662	76	1A
5310-919-8911	14	28
5310-920-0060	BULK	
5310-920-5440	88	39A
5310-920-5441	88	65A
5310-920-5441	89	71
5310-921-0651	88	39B
5310-921-0652	88	65
5310-921-0652	89	72
5310-921-3857	203	24
5310-922-8303	149	24
5310-922-8304	56	5
5310-922-8305	76	64
5310-922-8305	89	53
5310-924-5786	149	36
5310-924-5968	183A	79
5310-925-9642	21	3B
5310-925-9642	47	8
5310-925-9642	54	4
5310-925-9642	11B	83
5310-925-9642	261	13
5310-925-9642	KITS	
5310-925-9645	182A	46

STOCK NUMBER	FIGURE NUMBER	ITEM NUMBER
5310-925-9645	189A	41
5310-925-9645	189A	85
5310-926-1851	265	137
5310-926-1851	268	93
5310-926-1852	11	
5310-926-1852	15	8A
5310-926-1852	43	13
5310-926-1852	44	
5310-926-1852	44	25B
5310-926-1852	45	12B
5310-926-1852	45	8
5310-926-1852	49	47
5310-926-1852	60	
5310-926-1852	61	
5310-926-1852	62	69
5310-926-1852	QC1	78
5310-926-1852	100	12
5310-926-1852	196	
5310-926-1852	207	
5310-926-1852	238	14
5310-926-1852	238	56
5310-926-1852	238	58
5310-926-1852	256	1
5310-926-1852	256	16
5310-926-1852	263	2
5310-926-1852	273	14
5310-926-1852	42A	6
5310-926-1852	42B	28
5310-926-1852	42C	7
5310-926-1852	KITS	
5310-926-5755	32	
5310-927-9550	239	40
5310-927-9550	239	74
5310-927-9550	KITS	
5310-928-2690	176	20
5310-928-2690	176	8
5310-928-2690	177	19
5310-928-2690	177	7
5310-929-4077	BULK	
5310-929-5817	239	92
5310-929-8538	BULK	
5310-931-7098	43	2
5310-932-3680	263	25B
5310-932-3686	72	43
5310-932-3686	KITS	
5310-932-3687	248	52
5310-933-8118	176	27
5310-933-8118	176	30
5310-933-8118	177	27
5310-933-8118	177	28
5310-933-8118	197	63
5310-933-8119	204	2A
5310-933-8120	BULK	
5310-933-8121	11B	
5310-933-8121	KITS	
5310-934-9737	167	18
5310-934-9738	193	52
5310-934-9738	194	10
5310-934-9738	194	45
5310-934-9739	157	87
5310-934-9739	193	54
5310-934-9739	193	80
5310-934-9739	193	85
5310-934-9739	194	14
5310-934-9739	194	21
5310-934-9739	194	25
5310-934-9739	194	30
5310-934-9739	194	34
5310-934-9739	194	70
5310-934-9739	197	11
5310-934-9739	197	57
5310-934-9739	197	65
5310-934-9739	205	28A
5310-934-9739	BULK	
5310-934-9739	KITS	
5310-934-9747	190	37
5310-934-9747	193	40
5310-934-9747	194	19
5310-934-9747	194	38
5310-934-9747	226	36
5310-934-9747	182A	39
5310-934-9747	189A	27
5310-934-9748	268	204A
5310-934-9751	191	14
5310-934-9751	195	11
5310-934-9751	213	
5310-934-9752	247	10
5310-934-9758	BULK	
5310-934-9762	QC1	
5310-934-9762	BULK	
5310-934-9763	190	28
5310-934-9765	275	
5310-934-9766	204	6
5310-935-3555	BULK	
5310-936-4355	11	74
5310-936-9642	100	24
5310-936-9662	192	73
5310-938-3220	248	71
5310-939-0783	269	18
5310-939-0783	269	8A
5310-939-0853	192	70
5310-939-0918	69	31
5310-941-6019	37	
5310-941-6019	232	43
5310-942-4663	81	84
5310-942-4663	83	213
5310-942-5183	269	6
5310-943-7507	149	41
5310-948-4090	76	142H
5310-948-9760	BULK	
5310-948-9953	75	100
5310-949-6143	95	50
5310-949-6143	95	93
5310-949-6143	95	94
5310-949-6143	95	98
5310-949-6143	117	
5310-949-6143	119	253
5310-949-6143	129	45A
5310-949-6143	213	
5310-949-6143	213	
5310-949-6143	213	
5310-949-6143	218	
5310-949-6143	218	66
5310-949-6143	220	
5310-949-6143	220	
5310-949-6143	220	
5310-949-6143	220	24
5310-949-6143	221	125
5310-949-6143	221	135
5310-949-6143	221	26
5310-949-6143	221	28
5310-949-6143	221	34
5310-949-6143	221	35
5310-949-6143	221	52
5310-949-6143	221	59
5310-949-6143	221	60
5310-949-6143	221	61
5310-949-6143	221	67
5310-949-6143	221	73
5310-949-6143	221	76
5310-949-6143	221	89
5310-949-6143	221	90

STOCK NUMBER	FIGURE NUMBER	ITEM NUMBER
5310-949-6143	221	96
5310-949-6143	221	98
5310-949-6143	219A	171
5310-949-6143	219A	66
5310-949-8279	15	43
5310-950-0039	11	127C
5310-950-0039	11	21
5310-950-0039	11	58
5310-950-0039	11	90
5310-950-1292	57	3
5310-950-1310	20	85
5310-950-1310	20	98
5310-950-1310	185	4
5310-950-1310	193	9
5310-950-1310	197	55
5310-950-1310	198	
5310-950-1310	205	28C
5310-950-1310	215	49
5310-950-1310	252	7
5310-950-1310	263	18
5310-951-0790	273	31
5310-951-1897	68	41
5310-951-1897	183A	70
5310-951-1897	204A	109
5310-951-1897	204A	166
5310-951-1897	204A	170
5310-951-1897	204A	22
5310-955-5903	204A	175
5310-955-9518	81	84A
5310-955-9518	83	214
5310-957-3717	11	92
5310-958-5321	BULK	
5310-961-8390	76	118A
5310-961-8390	81	166
5310-961-8390	222	2
5310-961-8390	222	33
5310-961-8390	223	39
5310-961-8390	223	76
5310-961-8390	226	13
5310-961-8390	226	3
5310-961-8390	228	119
5310-961-8390	228	12
5310-961-8390	228	127B
5310-961-8390	228	159
5310-961-8390	228	174
5310-961-8390	228	185
5310-961-8390	228	34
5310-961-8390	228	4
5310-961-8390	228	48
5310-961-8390	228	65
5310-961-8390	228	67
5310-961-8390	228	72
5310-961-8390	228	96
5310-961-8390	229	32
5310-961-8390	229	38
5310-961-8390	237	23
5310-961-8390	237	51
5310-961-8390	244	20
5310-961-8390	244	29
5310-961-8390	245	18A
5310-961-8390	246	4
5310-961-8390	KITS	
5310-961-8391	222	175
5310-961-8391	222	93
5310-961-8391	244	65
5310-961-8391	KITS	
5310-961-8392	222	45
5310-961-8392	244	38
5310-961-8392	KITS	
5310-961-8393	222	110
5310-961-8393	222	35
5310-961-8393	237	3
5310-961-8393	237	31
5310-961-8393	239	15
5310-961-8393	239	151
5310-961-8393	239	9
5310-961-8393	242	4
5310-961-8393	244	11
5310-961-8393	244	4
5310-961-8393	KITS	
5310-961-8394	239	2
5310-961-8394	239	39
5310-961-8394	239	73
5310-961-8394	239	84
5310-961-8394	240	37
5310-961-8394	240	48
5310-961-8394	240	9
5310-961-8394	244	102
5310-961-8394	244	113
5310-961-8394	244	134
5310-961-8394	KITS	
5310-961-8395	236	16
5310-961-8395	236	3
5310-961-8395	244	123
5310-961-8396	222	113
5310-961-8396	222	125
5310-961-8396	237	37
5310-961-8396	237	9
5310-961-8396	238	39
5310-961-8396	239	102
5310-961-8396	239	164
5310-961-8396	KITS	
5310-962-5581	BULK	
5310-962-5581	219A	155
5310-962-5581	219A	48
5310-964-0878	BULK	
5310-964-3896	230	13
5310-964-3896	231	16
5310-964-9511	BULK	
5310-965-7092	184	
5310-965-7092	183A	63
5310-969-4450	BULK	
5310-971-8446	190A	3
5310-979-8955	43	1
5310-981-3118	59	36B
5310-981-3884	20	17
5310-982-0836	11A	84
5310-982-0836	271	14B
5310-982-0837	11A	79
5310-982-0837	271	14A
5310-982-4129	221A	2
5310-982-4908	76	126B
5310-982-4908	81	61
5310-982-4908	83	201
5310-982-4908	83	26
5310-982-4908	83	33
5310-982-4908	88	1
5310-982-4908	89	1
5310-982-4912	56	10
5310-982-4912	76	138
5310-982-4912	76	142A
5310-982-4912	76	20
5310-982-4912	76	24
5310-982-4912	76	29
5310-982-4912	76	38
5310-982-4912	76	84
5310-982-4912	80	1
5310-982-4912	81	143
5310-982-4912	83	12
5310-982-4912	83	169
5310-982-4912	83	20A
5310-982-4912	83	3

STOCK NUMBER	FIGURE NUMBER	ITEM NUMBER
5310-982-4912	83	303
5310-982-4912	83	327
5310-982-4912	83	367
5310-982-4912	83	95
5310-982-4912	87	1
5310-982-4912	89	30
5310-982-4974	62	16
5310-982-4974	QC1	184A
5310-982-4988	62	
5310-982-4988	97	11A
5310-982-4988	97	16
5310-982-4988	97	3
5310-982-4988	97	7A
5310-982-4988	98	2
5310-982-4988	98	5
5310-982-4988	99	2
5310-982-4988	218	
5310-982-4988	219A	138
5310-982-4988	219A	26
5310-982-4999	KITS	
5310-982-6808	KITS	
5310-982-6808	KITS	
5310-982-6809	BULK	
5310-982-6809	KITS	
5310-982-6810	BULK	
5310-982-6813	228	147B
5310-982-6813	BULK	
5310-982-6813	KITS	
5310-982-6814	204	19A
5310-982-6814	KITS	
5310-982-6816	BULK	
5310-983-8483	182A	41
5310-983-8483	197A	11
5310-983-8483	197A	16
5310-984-5659	138	41
5310-988-0226	76	63B
5310-988-0226	89	52
5310-989-0065	11	56A
5310-989-0560	20	
5310-989-7773	BULK	
5310-990-1350	44	22
5310-990-9019	71	42
5310-991-0283	75	100
5310-991-0283	75	119
5310-991-0283	75	128
5310-991-0283	75	89
5310-991-0283	81	166
5310-991-0283	88	49
5310-995-4054	183	30
5310-995-6712	BULK	
5310-996-7497	81	101
5310-996-7497	83	251
5310-998-2785	42A	30
5310-998-2785	42B	85
5310-998-2785	42C	31
5310-998-5023	258	3A
5315-011-9120	59	1
5315-013-7214	44	14
5315-013-8123	267	18
5315-014-2953	89	34A
5315-021-3646	76	94A
5315-023-4254	18	
5315-023-4254	28	25
5315-023-4254	KITS	
5315-023-6222	102	61
5315-023-6222	103	54
5315-039-5563	102	39
5315-039-5563	103	32
5315-053-1715	74	59
5315-058-9698	102	7A
5315-058-9698	103	8
5315-058-9698	197	
5315-058-9731	263	19
5315-058-9782	71	64
5315-058-9784	36A	
5315-059-0491	49	32
5315-059-0491	51	25E
5315-059-0491	239	50
5315-063-7366	18	
5315-063-7366	20	108
5315-063-7366	207	
5315-063-7366	208	19
5315-063-7366	KITS	
5315-068-5760	265	216
5315-080-0484	22	38
5315-080-0485	BULK	
5315-080-0486	22	37
5315-080-1939	BULK	
5315-080-1940	BULK	
5315-080-1944	183	52
5315-081-7021	BULK	
5315-081-7030	BULK	
5315-081-7874	15	31
5315-081-7874	KITS	
5315-086-7265	53	37
5315-086-7265	54	28
5315-087-8226	18	
5315-087-8226	37A	52
5315-087-8226	37A	59
5315-087-8226	37A	64
5315-087-8226	37A	72
5315-087-8226	37A	79
5315-089-3000	92	7
5315-104-9004	42B	77
5315-118-2127	102	61
5315-118-2127	103	54
5315-128-1958	83	191
5315-133-1956	67	46A
5315-133-3605	216	43
5315-141-6355	32	
5315-141-6355	32	38
5315-141-6909	165	50
5315-151-8926	67	11
5315-151-8926	67	47
5315-158-5107	183A	46
5315-158-5109	183A	85
5315-158-5111	183A	33
5315-158-5119	183A	84
5315-177-1158	221A	8
5315-177-1159	221A	13
5315-177-1160	221A	15
5315-177-1161	221A	14
5315-181-6314	170	27
5315-181-6314	171	29
5315-198-8091	20	41
5315-198-8095	20	82
5315-198-8095	20	95
5315-198-8098	BULK	
5315-198-8120	42B	19
5315-226-1815	190	
5315-234-1851	28	24F
5315-234-1851	BULK	
5315-234-1852	BULK	
5315-234-1854	18	
5315-234-1854	18	91A
5315-234-1854	18	98A
5315-234-1854	28	3
5315-234-1854	28	5
5315-234-1854	31	
5315-234-1854	66	1
5315-234-1854	66	12
5315-234-1854	66	27

STOCK NUMBER	FIGURE NUMBER	ITEM NUMBER
5315-234-1854	71	117
5315-234-1854	76	118
5315-234-1854	81	165B
5315-234-1854	F16	18
5315-234-1854	F16	33
5315-234-1854	QC1	37A
5315-234-1854	QC1	41A
5315-234-1854	222	111
5315-234-1854	222	136
5315-234-1854	222	14
5315-234-1854	222	143
5315-234-1854	222	19A
5315-234-1854	222	32
5315-234-1854	223	1
5315-234-1854	223	101
5315-234-1854	223	106
5315-234-1854	223	123
5315-234-1854	223	135
5315-234-1854	223	14
5315-234-1854	223	146
5315-234-1854	223	188
5315-234-1854	223	203
5315-234-1854	223	21
5315-234-1854	223	29
5315-234-1854	223	38
5315-234-1854	223	74
5315-234-1854	223	8
5315-234-1854	223	83
5315-234-1854	223	88
5315-234-1854	228	129A
5315-234-1854	228	26
5315-234-1854	228	3
5315-234-1854	228	33
5315-234-1854	229	37
5315-234-1854	237	24
5315-234-1854	237	32
5315-234-1854	237	4
5315-234-1854	237	52
5315-234-1854	239	114
5315-234-1854	239	128
5315-234-1854	239	14
5315-234-1854	239	150
5315-234-1854	239	8
5315-234-1854	239	94
5315-234-1854	239	94
5315-234-1854	244	12
5315-234-1854	244	21
5315-234-1854	244	30
5315-234-1854	244	5
5315-234-1854	255	5A
5315-234-1854	275	14A
5315-234-1854	42B	
5315-234-1854	42B	43
5315-234-1854	42B	50
5315-234-1854	42B	6
5315-234-1854	42B	61
5315-234-1854	KITS	
5315-234-1854	KITS	
5315-234-1856	15	31B
5315-234-1856	16	26A
5315-234-1856	16	6A
5315-234-1856	18	
5315-234-1856	20	
5315-234-1856	22	
5315-234-1856	22	17C
5315-234-1856	22	3C
5315-234-1856	22	6D
5315-234-1856	24	
5315-234-1856	24	19A
5315-234-1856	24	6A
5315-234-1856	24	7
5315-234-1856	28	
5315-234-1856	31	
5315-234-1856	33	44A
5315-234-1856	36	26
5315-234-1856	71	127
5315-234-1856	75	21
5315-234-1856	F15	26
5315-234-1856	F15	51
5315-234-1856	125	2
5315-234-1856	129	
5315-234-1856	183	51
5315-234-1856	184	6A
5315-234-1856	184	7A
5315-234-1856	207	
5315-234-1856	208	20
5315-234-1856	222	
5315-234-1856	222	1
5315-234-1856	226	12
5315-234-1856	226	2
5315-234-1856	228	11
5315-234-1856	228	118
5315-234-1856	228	127A
5315-234-1856	228	158
5315-234-1856	228	173
5315-234-1856	228	184
5315-234-1856	228	47
5315-234-1856	228	55
5315-234-1856	228	64
5315-234-1856	228	66
5315-234-1856	228	71
5315-234-1856	228	95
5315-234-1856	229	31
5315-234-1856	235	3
5315-234-1856	235	8
5315-234-1856	240	17
5315-234-1856	240	25
5315-234-1856	242	2
5315-234-1856	243	4
5315-234-1856	245	1
5315-234-1856	245	18C
5315-234-1856	245	21A
5315-234-1856	246	4A
5315-234-1856	253	43
5315-234-1856	255	23
5315-234-1856	255	3
5315-234-1856	256	9
5315-234-1856	263	10
5315-234-1856	263	22
5315-234-1856	264	18
5315-234-1856	265	156
5315-234-1856	265	236
5315-234-1856	265	238
5315-234-1856	265	241
5315-234-1856	265	248
5315-234-1856	265	8
5315-234-1856	268	145
5315-234-1856	268	77
5315-234-1856	270	4
5315-234-1856	KITS	
5315-234-1860	BULK	
5315-234-1861	92	12
5315-234-1861	92	67
5315-234-1861	KITS	
5315-234-1863	45	29C
5315-234-1863	49	49
5315-234-1863	F15	20
5315-234-1863	KITS	
5315-234-1863	KITS	
5315-234-1864	36	
5315-234-1864	60	8

STOCK NUMBER	FIGURE NUMBER	ITEM NUMBER
5315-234-1864	61	1
5315-234-1864	61	13
5315-234-1864	61	18
5315-234-1864	75	13
5315-234-1864	75	52
5315-234-1864	75	61
5315-234-1864	90	15C
5315-234-1864	222	99
5315-234-1864	236	15
5315-234-1864	236	2
5315-234-1864	237	10
5315-234-1864	237	38
5315-234-1864	239	101
5315-234-1864	239	163
5315-234-1864	240	36
5315-234-1864	240	47
5315-234-1864	240	8
5315-234-1864	244	103
5315-234-1864	244	114
5315-234-1864	244	124
5315-234-1864	244	135
5315-234-1864	244	71
5315-234-1864	270	53
5315-234-1864	KITS	
5315-236-8345	BULK	
5315-236-8357	239	19
5315-236-8357	239	90
5315-236-8362	72	2
5315-236-8362	72	36
5315-236-8362	72	68
5315-236-8362	75	44
5315-236-8362	75	52
5315-236-8362	F14	4
5315-236-8362	F16	23
5315-236-8362	KITS	
5315-236-8365	45	13
5315-236-8365	45	14
5315-236-8365	45	9
5315-236-8365	49	58
5315-236-8365	KITS	
5315-238-1584	20	61
5315-238-1584	59	28
5315-239-8019	13	2B
5315-239-8019	21	23A
5315-239-8023	18	29
5315-239-8023	18	79
5315-239-8023	76	160
5315-239-8024	248	42
5315-239-8030	45	12
5315-239-8031	BULK	
5315-241-2917	265	209
5315-241-2917	265	298
5315-241-2917	268	232
5315-241-2917	268	259
5315-241-2920	265	94
5315-241-2920	268	28
5315-241-2920	BULK	
5315-241-2921	265	283
5315-241-2921	268	246
5315-241-2922	BULK	
5315-241-2923	265	214
5315-241-2923	268	221
5315-241-2923	BULK	
5315-241-7330	34	36
5315-241-7330	34	47
5315-241-7330	45	10A
5315-241-7330	45	11
5315-241-7330	75	13
5315-241-7330	75	44
5315-241-7330	75	52
5315-241-7330	75	61
5315-241-7330	75	62
5315-241-7330	F16	14
5315-241-7330	F16	36
5315-241-7330	222	112
5315-241-7330	222	124
5315-241-7330	222	162
5315-241-7330	222	168
5315-241-7330	222	176
5315-241-7330	222	182
5315-241-7330	222	190
5315-241-7330	222	201
5315-241-7330	222	45
5315-241-7330	222	51
5315-241-7330	222	57
5315-241-7330	222	62
5315-241-7330	222	70
5315-241-7330	222	89
5315-241-7330	222	94
5315-241-7330	222	99
5315-241-7330	223	160
5315-241-7330	223	53
5315-241-7330	239	1
5315-241-7330	239	101
5315-241-7330	239	163
5315-241-7330	239	38
5315-241-7330	239	72
5315-241-7330	239	83
5315-241-7330	242	3
5315-241-7330	243	15A
5315-241-7330	243	22A
5315-241-7330	243	9A
5315-241-7330	244	103
5315-241-7330	244	114
5315-241-7330	244	124
5315-241-7330	244	135
5315-241-7330	244	39
5315-241-7330	244	45
5315-241-7330	244	51
5315-241-7330	244	55
5315-241-7330	244	60
5315-241-7330	244	66
5315-241-7330	244	71
5315-241-7330	244	83
5315-241-7330	244	88
5315-241-7330	244	94
5315-241-7330	244	99
5315-241-7330	KITS	
5315-241-7332	34	30
5315-241-7332	69	5
5315-241-7332	70	20
5315-241-7332	75	52
5315-241-7332	239	19
5315-241-7332	239	50
5315-241-7332	239	90
5315-241-7332	244	60
5315-241-7332	244	71
5315-241-7332	244	83
5315-241-7332	244	88
5315-241-7332	244	94
5315-241-7332	244	99
5315-241-7332	KITS	
5315-243-1170	KITS	
5315-245-1254	KITS	
5315-245-8514	88	98A
5315-252-5987	18	
5315-252-5987	22	22D
5315-253-1724	83	271
5315-276-0092	73	28A
5315-276-6757	266	26
5315-276-6757	267	48
5315-282-6888	265	126

STOCK NUMBER	FIGURE NUMBER	ITEM NUMBER
5315-282-6888	268	132
5315-285-7161	51	4A
5315-285-7161	72	2
5315-285-7161	222	185
5315-285-7161	222	65
5315-285-7161	238	16
5315-285-7161	238	40
5315-285-7161	238	48
5315-285-7161	240	74
5315-285-7161	KITS	
5315-290-3434	63	81
5315-290-3434	154	15
5315-290-7549	BULK	
5315-291-5471	74	66
5315-292-0188	170	56
5315-292-0188	171	57
5315-297-2342	22	45
5315-298-1481	44	18
5315-298-1498	51	66
5315-298-3704	216	1
5315-308-2506	160	49
5315-316-0855	63	44
5315-316-0855	274	27
5315-369-2831	F2	9
5315-373-7543	216	47
5315-373-7543	216	50
5315-404-4220	67A	41
5315-407-7380	150A	6
5315-420-0303	149	70
5315-435-5272	63	56
5315-485-9758	64A	60
5315-485-9766	64A	35
5315-514-1427	76	43
5315-514-1427	80	13
5315-514-1427	81	169
5315-514-1427	81	69
5315-514-1427	88	58
5315-514-1434	170	60
5315-514-1434	171	60
5315-527-0159	170	74
5315-527-0159	171	59
5315-527-2183	63	88
5315-527-2183	267	34
5315-537-1301	170	48
5315-537-1301	171	48
5315-543-3033	60	
5315-576-8779	51	13
5315-597-1520	BULK	
5315-597-1543	F15	31
5315-597-1543	F20	8
5315-597-1642	BULK	
5315-597-2415	F15	32
5315-614-3598	24	24
5315-614-3598	KITS	
5315-616-4261	BULK	
5315-616-5514	82	21
5315-616-5514	252	4
5315-616-5519	190	
5315-616-5524	78	12
5315-619-3275	BULK	
5315-619-3275	KITS	
5315-619-7976	137	18
5315-619-7976	137	40
5315-628-0753	138	74
5315-663-1298	102	14
5315-663-1298	103	16
5315-663-9518	216	44
5315-664-0401	BULK	
5315-664-4841	81	180
5315-664-7294	231	37
5315-678-8603	265	140
5315-678-8603	268	96
5315-682-1460	268	270
5315-685-4846	BULK	
5315-687-3787	44	25A
5315-687-5218	78	18
5315-687-5218	78	23
5315-687-5218	78	31
5315-687-5218	78	36
5315-687-5218	78	41
5315-687-5218	265	262
5315-687-5218	268	187A
5315-726-5077	190A	34
5315-731-7487	216	56
5315-733-2495	126	4
5315-733-2495	128	17
5315-738-6871	37	
5315-754-1855	11	133E
5315-754-2196	76	141
5315-754-2196	76	142E
5315-754-2196	83	203
5315-754-2196	88	31
5315-754-2196	91	14
5315-761-2215	37	19
5315-763-0920	272	27
5315-767-9489	234	
5315-771-7352	BULK	
5315-779-3364	53	55
5315-789-1377	212	15
5315-792-2940	212	22
5315-793-0013	36A	19
5315-799-0489	234	
5315-810-3701	17	25
5315-810-3702	BULK	
5315-811-1232	BULK	
5315-811-1233	37A	40
5315-811-1233	KITS	
5315-811-1241	36A	16
5315-811-1241	36B	19
5315-811-1241	BULK	
5315-811-1242	125	5
5315-811-1245	18	
5315-811-1245	265	15
5315-811-1245	268	82
5315-811-1255	129	
5315-811-1255	KITS	
5315-811-1256	18	38
5315-811-1256	18	87
5315-811-1256	31	
5315-811-1265	36	26
5315-811-1265	125	3
5315-811-1265	263	17
5315-811-1266	184	6
5315-811-1267	20	86
5315-811-1267	20	99
5315-811-1279	18	
5315-811-5350	53	24
5315-811-9102	184	7
5315-811-9102	37A	58
5315-811-9103	BULK	
5315-811-9106	37	26
5315-811-9106	265	10
5315-811-9106	268	75
5315-811-9107	17	
5315-811-9107	17	3
5315-812-1215	BULK	
5315-812-1216	BULK	
5315-812-3426	16	26
5315-812-3734	BULK	
5315-812-3741	37A	71
5315-812-3741	37A	78
5315-812-3750	BULK	

STOCK NUMBER	FIGURE NUMBER	ITEM NUMBER
5315-812-3752	BULK	
5315-812-3757	18	
5315-812-3757	37A	85
5315-812-3759	59	36A
5315-812-3764	222	
5315-812-3764	265	179
5315-812-3764	268	143
5315-812-3765	263	21
5315-812-3766	33	39A
5315-812-3766	33	41
5315-812-3766	KITS	
5315-815-1405	11	102
5315-815-1405	17	
5315-815-1405	17	1
5315-815-1405	18	
5315-815-1405	18	37
5315-815-1405	18	86
5315-815-1405	20	107
5315-815-1405	20	84
5315-815-1405	20	97
5315-815-1405	37	25
5315-815-1405	137	1
5315-815-1405	137	11
5315-815-1405	256	6
5315-815-1405	36A	14
5315-815-1405	36B	17
5315-815-1405	37A	41
5315-815-1405	37A	54
5315-815-1405	37A	60
5315-815-1405	37A	66
5315-815-1405	37A	73
5315-815-1405	37A	80
5315-815-1405	37A	83
5315-815-1405	37A	86
5315-815-1405	37B	25
5315-815-1405	42B	16
5315-815-1405	KITS	
5315-815-1405	KITS	
5315-815-9074	BULK	
5315-815-9366	73	28C
5315-816-1794	59	20
5315-817-0612	270	60
5315-823-8740	184	23C
5315-823-8740	247	19
5315-823-8740	248	101
5315-823-8743	BULK	
5315-823-8747	226	47
5315-826-1576	49	26C
5315-826-1576	BULK	
5315-828-3233	BULK	
5315-828-5486	89	122
5315-828-5486	89	33A
5315-828-5487	265	141
5315-828-5487	265	193
5315-828-5487	265	197
5315-828-5487	268	166
5315-828-5487	268	170
5315-828-5487	268	98
5315-828-5488	63	86
5315-828-5488	267	44
5315-829-8347	121	14
5315-829-8347	122	8
5315-835-1484	BULK	
5315-836-9628	34	
5315-839-2325	59	36
5315-839-5820	34	44
5315-839-5820	59	10
5315-839-5820	184	10A
5315-839-5820	42A	12
5315-839-5820	42C	13
5315-842-3044	49	31
5315-842-3044	49	56
5315-842-3044	51	72
5315-843-7988	128	44
5315-843-7988	230	40
5315-844-3940	BULK	
5315-844-3942	203	35
5315-844-3961	BULK	
5315-844-3962	BULK	
5315-844-5644	13	2A
5315-844-5644	102	15
5315-844-5644	103	17
5315-844-5644	230	33
5315-844-5644	231	79
5315-845-2196	88	92
5315-845-2196	89	124
5315-846-5928	265	147
5315-846-5928	268	104
5315-847-3735	52	9
5315-847-3735	105	10
5315-847-5677	148	31
5315-849-4610	31	
5315-849-5578	BULK	
5315-855-6804	33	39B
5315-855-6804	33	41A
5315-855-6804	KITS	
5315-855-6805	18	
5315-855-6805	62	8A
5315-855-6805	QC1	21A
5315-855-6805	231	109
5315-855-6805	BULK	
5315-855-6805	KITS	
5315-855-9066	263	7
5315-855-9140	80	26
5315-856-1714	72	14
5315-856-3517	76	161
5315-856-4098	102	53A
5315-856-4098	103	3
5315-857-2480	20	105
5315-865-9667	203	2
5315-865-9667	230	22
5315-865-9667	231	49
5315-868-1099	63	108
5315-869-0719	44	25H
5315-869-0719	45	13C
5315-869-9016	265	205
5315-869-9016	268	162
5315-872-3277	17	20
5315-879-4829	18	
5315-879-4829	20	104
5315-880-5813	63	99
5315-889-2699	80	2
5315-891-8396	248	55
5315-895-9461	83	196
5315-898-0110	75	33
5315-898-9695	263	25D
5315-899-4116	51	62A
5315-899-4116	60	25
5315-899-4116	61	26
5315-899-4116	KITS	
5315-899-4118	44	25E
5315-899-4118	244	77
5315-899-4119	44	21
5315-909-1318	76	128
5315-909-1318	KITS	
5315-914-2651	81	103
5315-914-2652	81	209
5315-914-2652	88	98
5315-914-4133	268	250
5315-914-5782	183A	18
5315-914-9477	81	124
5315-914-9477	81	126

STOCK NUMBER	FIGURE NUMBER	ITEM NUMBER
5315-916-2441	76	43
5315-916-2441	76	45
5315-916-2441	76	46B
5315-916-2441	80	4
5315-917-3833	274	22
5315-917-3844	138	33
5315-917-3845	138	51
5315-917-6226	137	
5315-919-4657	138	19
5315-919-9255	81	211
5315-922-3986	36B	21
5315-922-5858	111	9
5315-924-5435	83	238
5315-926-5796	18	155
5315-928-1997	102	37B
5315-928-1997	102	37F
5315-929-1040	138	61
5315-936-6179	BULK	
5315-939-0869	BULK	
5315-941-7062	149	21
5315-941-7062	274	50
5315-941-7379	149	87
5315-942-7561	149	75
5315-945-5734	149	78
5315-950-7016	21	69
5315-951-2395	18	31
5315-951-2395	18	81
5315-951-2395	37A	53
5315-951-2395	37A	65
5315-951-2395	37A	82
5315-953-3299	83	180
5315-953-3455	73	30A
5315-953-3455	81	107
5315-953-3455	83	210
5315-953-3455	83	210
5315-953-3455	87	22
5315-953-3455	124	
5315-953-5742	BULK	
5315-957-7059	BULK	
5315-957-7809	81	67
5315-957-7809	83	140
5315-957-7809	83	171
5315-957-7809	83	337
5315-957-7809	89	81
5315-957-7809	92	27A
5315-957-7809	92	81A
5315-957-7830	80	11
5315-957-7830	80	15
5315-963-2056	274	21
5315-967-0527	BULK	
5315-984-7377	18	
5315-984-7377	20	99
5315-984-7377	11A	1
5315-988-9971	265	176
5315-988-9971	268	146
5315-988-9971	BULK	
5315-989-4146	224	29
5315-989-7631	264	1C
5315-990-1338	BULK	
5315-990-2890	263	14
5315-995-9868	83	307
5315-996-7515	223	98
5315-997-6312	138	42
5315-998-8099	212	31
5320-012-0740	102	30A
5320-012-0740	103	26A
5320-012-0740	BULK	
5320-037-8922	BULK	
5320-038-3383	BULK	
5320-043-1992	BULK	
5320-045-1818	BULK	
5320-054-8386	BULK	
5320-054-8396	BULK	
5320-054-8397	BULK	
5320-054-8398	BULK	
5320-055-2389	BULK	
5320-058-2297	BULK	
5320-058-2300	BULK	
5320-058-2305	BULK	
5320-058-2307	BULK	
5320-058-2310	BULK	
5320-058-2311	BULK	
5320-058-2312	BULK	
5320-058-2313	BULK	
5320-060-0421	BULK	
5320-061-7083	BULK	
5320-061-9660	BULK	
5320-061-9661	BULK	
5320-061-9662	BULK	
5320-061-9663	BULK	
5320-062-0621	BULK	
5320-064-3484	BULK	
5320-069-0053	BULK	
5320-069-0781	BULK	
5320-069-2596	BULK	
5320-069-5629	BULK	
5320-069-9131	11B	
5320-069-9131	BULK	
5320-071-5925	BULK	
5320-071-5926	BULK	
5320-080-0475	BULK	
5320-081-7418	165	74
5320-089-1257	BULK	
5320-090-0779	BULK	
5320-090-0783	BULK	
5320-092-4639	BULK	
5320-115-6368	BULK	
5320-117-6022	BULK	
5320-117-6375	BULK	
5320-117-6394	BULK	
5320-117-6396	BULK	
5320-117-6516	BULK	
5320-117-6521	BULK	
5320-117-6523	BULK	
5320-117-6524	31	
5320-117-6525	BULK	
5320-117-6526	BULK	
5320-117-6527	BULK	
5320-117-6529	BULK	
5320-117-6534	90	5
5320-117-6535	BULK	
5320-117-6536	92	105
5320-117-6536	92	37A
5320-117-6536	92	51A
5320-117-6536	92	91A
5320-117-6536	BULK	
5320-117-6537	BULK	
5320-117-6541	BULK	
5320-117-6813	BULK	
5320-117-6814	BULK	
5320-117-6815	BULK	
5320-117-6816	BULK	
5320-117-6817	BULK	
5320-117-6823	BULK	
5320-117-6824	BULK	
5320-117-6825	BULK	
5320-117-6826	BULK	
5320-117-6828	93	15B
5320-117-6828	BULK	
5320-117-6829	BULK	

STOCK NUMBER	FIGURE NUMBER	ITEM NUMBER
5320-117-6830	BULK	
5320-117-6832	BULK	
5320-117-6833	BULK	
5320-117-6834	BULK	
5320-117-6836	BULK	
5320-117-6837	BULK	
5320-117-6839	BULK	
5320-117-6840	31	
5320-117-6840	F20	26
5320-117-6840	BULK	
5320-117-6841	BULK	
5320-117-6842	BULK	
5320-117-6843	BULK	
5320-117-6844	BULK	
5320-117-6845	BULK	
5320-117-6849	BULK	
5320-117-6851	BULK	
5320-117-6857	BULK	
5320-117-6881	BULK	
5320-117-6882	BULK	
5320-117-6883	255	23A
5320-117-6883	BULK	
5320-117-6884	BULK	
5320-117-6885	BULK	
5320-117-6888	BULK	
5320-117-6891	BULK	
5320-117-6894	BULK	
5320-117-6937	BULK	
5320-117-6938	BULK	
5320-117-6939	91	8C
5320-117-6939	BULK	
5320-117-6942	BULK	
5320-117-6945	BULK	
5320-117-6947	BULK	
5320-117-6948	BULK	
5320-117-6949	BULK	
5320-117-6950	BULK	
5320-117-6951	BULK	
5320-117-6952	BULK	
5320-117-6953	F14	15B
5320-117-6953	BULK	
5320-117-6955	BULK	
5320-117-7231	BULK	
5320-117-7286	BULK	
5320-117-7288	BULK	
5320-117-7289	BULK	
5320-117-7294	BULK	
5320-118-1997	BULK	
5320-118-2000	BULK	
5320-118-2006	BULK	
5320-118-2011	BULK	
5320-118-2012	BULK	
5320-118-2016	BULK	
5320-118-2065	BULK	
5320-118-2066	BULK	
5320-118-2067	BULK	
5320-119-5549	BULK	
5320-121-3045	BULK	
5320-158-4433	68	82
5320-158-5210	183A	35
5320-163-9022	BULK	
5320-165-8736	BULK	
5320-165-8785	BULK	
5320-165-8811	BULK	
5320-165-8817	BULK	
5320-167-4928	BULK	
5320-167-4943	BULK	

STOCK NUMBER	FIGURE NUMBER	ITEM NUMBER
5320-167-4949	BULK	
5320-177-1052	71	115
5320-177-1143	BULK	
5320-177-1242	BULK	
5320-177-1243	BULK	
5320-205-7686	BULK	
5320-205-7917	BULK	
5320-234-1556	BULK	
5320-234-1557	BULK	
5320-234-2587	BULK	
5320-234-8556	BULK	
5320-234-8560	BULK	
5320-239-1285	BULK	
5320-239-1287	BULK	
5320-242-0299	BULK	
5320-242-0300	BULK	
5320-242-0370	BULK	
5320-243-0668	BULK	
5320-243-8356	BULK	
5320-245-3453	BULK	
5320-245-3459	BULK	
5320-245-4325	BULK	
5320-248-1904	BULK	
5320-256-1937	BULK	
5320-256-1942	BULK	
5320-256-1957	BULK	
5320-262-7672	BULK	
5320-262-7751	BULK	
5320-262-7752	BULK	
5320-262-7959	BULK	
5320-264-3320	BULK	
5320-264-4208	BULK	
5320-264-4297	BULK	
5320-264-4311	BULK	
5320-264-4425	BULK	
5320-264-4444	BULK	
5320-264-4469	BULK	
5320-270-2774	BULK	
5320-286-4209	BULK	
5320-286-4716	BULK	
5320-286-5957	BULK	
5320-489-4823	11	124
5320-489-4823	31	
5320-489-4823	32	
5320-489-4823	42A	
5320-489-4823	42C	
5320-489-4823	BULK	
5320-489-4824	BULK	
5320-527-5163	BULK	
5320-531-0707	BULK	
5320-531-0711	42A	
5320-531-0711	42C	
5320-531-0711	BULK	
5320-531-0713	BULK	
5320-531-0715	BULK	
5320-531-0728	BULK	
5320-531-0736	BULK	
5320-531-0739	BULK	
5320-531-0744	BULK	
5320-531-0791	BULK	
5320-531-0792	BULK	

STOCK NUMBER	FIGURE NUMBER	ITEM NUMBER	STOCK NUMBER	FIGURE NUMBER	ITEM NUMBER
5320-531-0793	BULK		5320-655-4757	BULK	
5320-543-3680	BULK		5320-660-0763	BULK	
5320-550-2397	BULK		5320-660-0993	BULK	
5320-550-4738	BULK		5320-660-1094	BULK	
5320-550-8896	BULK		5320-680-3598	11	125
5320-551-8000	BULK		5320-680-3598	70	39
5320-558-3085	BULK		5320-680-3598	BULK	
5320-558-6164	BULK		5320-680-4200	BULK	
5320-558-8029	BULK		5320-680-4201	BULK	
5320-558-9040	252	17	5320-680-4434	BULK	
5320-576-9960	BULK		5320-680-4456	BULK	
5320-579-1215	BULK		5320-682-1749	BULK	
5320-579-6818	BULK		5320-684-9524	BULK	
5320-582-3268	BULK		5320-684-9658	BULK	
5320-582-3272	BULK		5320-684-9909	BULK	
5320-582-3273	BULK		5320-684-9910	261	15
5320-582-3275	BULK		5320-684-9910	BULK	
5320-582-3276	BULK		5320-684-9911	BULK	
5320-582-3288	BULK		5320-685-0821	BULK	
5320-582-3289	BULK		5320-686-2137	BULK	
5320-582-3298	BULK		5320-686-2138	BULK	
5320-582-3301	BULK		5320-687-3175	BULK	
5320-582-3302	BULK		5320-687-3531	BULK	
5320-582-3303	BULK		5320-687-5162	BULK	
5320-582-3304	BULK		5320-687-5163	BULK	
5320-582-3305	BULK		5320-687-5165	BULK	
5320-582-3494	BULK		5320-687-5167	BULK	
5320-582-3495	BULK		5320-687-5168	BULK	
5320-582-3496	BULK		5320-687-5204	BULK	
5320-582-3497	BULK		5320-687-5205	BULK	
5320-582-3498	BULK		5320-687-5257	BULK	
5320-582-3499	BULK		5320-687-5258	BULK	
5320-582-3501	BULK		5320-687-5260	BULK	
5320-582-3502	BULK		5320-687-5402	BULK	
5320-582-3519	BULK		5320-687-5536	BULK	
5320-582-3520	BULK		5320-687-5537	BULK	
5320-582-3521	BULK		5320-687-5538	BULK	
5320-582-3939	BULK		5320-687-5539	BULK	
5320-584-0672	38		5320-687-5540	BULK	
5320-584-0672	BULK		5320-687-9587	BULK	
5320-584-1285	BULK		5320-687-9611	BULK	
5320-584-9078	BULK		5320-687-9668	BULK	
5320-613-8924	BULK		5320-687-9669	BULK	
5320-614-3584	BULK		5320-687-9670	BULK	
5320-616-4338	BULK		5320-687-9671	BULK	
5320-616-4344	BULK		5320-687-9672	BULK	
5320-616-4345	BULK		5320-687-9674	BULK	
5320-616-4346	BULK		5320-687-9677	BULK	
5320-616-4347	BULK		5320-687-9679	BULK	
5320-616-4349	BULK		5320-687-9680	BULK	
5320-616-4350	BULK		5320-687-9681	BULK	
5320-616-4351	BULK		5320-687-9682	BULK	
5320-616-4352	BULK		5320-687-9948	BULK	
5320-616-4353	BULK		5320-702-1899	BULK	
5320-616-5546	BULK		5320-702-1901	BULK	
5320-619-0157	BULK		5320-702-2235	BULK	
5320-619-0498	BULK		5320-702-2379	BULK	
5320-619-0917	BULK		5320-702-2380	BULK	
5320-619-4028	BULK		5320-702-2422	31	
5320-619-4039	BULK		5320-702-2423	BULK	
5320-619-4091	BULK		5320-702-2837	BULK	
5320-619-4099	BULK		5320-702-2896	BULK	
5320-630-5713	BULK		5320-702-2901	BULK	
5320-630-5715	BULK		5320-702-2902	BULK	
5320-630-5716	BULK		5320-702-3217	BULK	
5320-630-5717	BULK		5320-702-3221	BULK	
5320-631-3440	BULK		5320-702-3222	BULK	
5320-637-5006	BULK		5320-702-3223	BULK	
5320-637-5014	BULK		5320-702-3228	BULK	
5320-637-6158	BULK		5320-702-3259	BULK	
5320-638-8619	BULK		5320-702-4957	BULK	

STOCK NUMBER	FIGURE NUMBER	ITEM NUMBER
5320-702-4960	BULK	
5320-702-4961	BULK	
5320-702-4975	90	8
5320-702-4975	BULK	
5320-702-5568	BULK	
5320-702-5619	BULK	
5320-702-6353	BULK	
5320-702-6881	BULK	
5320-702-8513	BULK	
5320-720-6462	BULK	
5320-721-5210	BULK	
5320-721-5245	193	4
5320-724-9329	BULK	
5320-725-6927	BULK	
5320-725-7277	BULK	
5320-727-8418	BULK	
5320-734-1986	BULK	
5320-734-9202	BULK	
5320-734-9227	BULK	
5320-734-9230	BULK	
5320-734-9233	BULK	
5320-753-3809	BULK	
5320-753-3830	BULK	
5320-754-0822	32	16
5320-754-0822	213	
5320-754-0822	BULK	
5320-754-0992	BULK	
5320-754-1906	BULK	
5320-761-8454	BULK	
5320-763-3682	BULK	
5320-764-7287	BULK	
5320-780-9615	BULK	
5320-781-0485	BULK	
5320-781-0490	BULK	
5320-788-8066	BULK	
5320-800-6276	BULK	
5320-800-6277	BULK	
5320-800-6278	BULK	
5320-800-6405	BULK	
5320-800-7860	92	37B
5320-800-7860	92	51B
5320-800-7860	92	91B
5320-800-7860	BULK	
5320-800-9544	BULK	
5320-800-9545	BULK	
5320-800-9546	BULK	
5320-801-4796	BULK	
5320-801-4797	BULK	
5320-801-4799	BULK	
5320-802-1404	BULK	
5320-802-4065	BULK	
5320-802-4067	BULK	
5320-802-4067	BULK	
5320-802-4068	BULK	
5320-802-4069	BULK	
5320-802-4078	BULK	
5320-803-7119	BULK	
5320-805-3169	BULK	
5320-806-2623	75	34
5320-807-9273	BULK	
5320-807-9275	BULK	
5320-808-0811	BULK	
5320-808-0813	BULK	
5320-808-7822	BULK	
5320-809-1683	BULK	
5320-809-1685	BULK	
5320-812-0183	BULK	
5320-812-8005	92	38
5320-812-8005	92	52
5320-812-8005	92	92
5320-812-8694	BULK	
5320-812-8695	BULK	
5320-813-4144	BULK	
5320-813-4793	BULK	
5320-814-8677	BULK	
5320-814-9771	BULK	
5320-818-0942	BULK	
5320-819-9746	BULK	
5320-822-6257	BULK	
5320-824-1538	21	22A
5320-824-1538	BULK	
5320-826-3245	BULK	
5320-827-4962	BULK	
5320-827-7058	BULK	
5320-827-7061	BULK	
5320-828-6888	BULK	
5320-833-2433	92	14
5320-833-2433	92	39
5320-833-2433	92	53
5320-833-2433	92	69
5320-833-2433	92	97
5320-833-2433	BULK	
5320-835-5369	BULK	
5320-836-1081	BULK	
5320-840-0989	BULK	
5320-840-0992	BULK	
5320-840-0993	BULK	
5320-840-0994	BULK	
5320-840-0996	BULK	
5320-840-3684	BULK	
5320-842-7333	BULK	
5320-843-0534	102	29A
5320-843-0534	102	30A
5320-843-0534	BULK	
5320-844-1851	BULK	
5320-845-9501	BULK	
5320-850-5809	BULK	
5320-850-5810	BULK	
5320-853-0360	BULK	
5320-853-0361	BULK	
5320-853-4971	BULK	
5320-864-6203	BULK	
5320-871-4585	18	
5320-871-4585	BULK	
5320-878-7184	70	38
5320-878-7184	BULK	
5320-887-3507	BULK	
5320-889-2494	BULK	
5320-889-2495	BULK	
5320-889-9915	BULK	
5320-891-1309	BULK	
5320-891-1310	BULK	
5320-891-1319	BULK	
5320-891-1324	BULK	
5320-891-1332	BULK	
5320-891-1829	BULK	
5320-898-7879	BULK	
5320-898-7895	BULK	
5320-898-7936	71	111A
5320-898-7936	BULK	
5320-910-8410	BULK	
5320-914-3254	BULK	
5320-914-7032	BULK	
5320-916-9662	BULK	
5320-916-9668	BULK	
5320-918-4886	BULK	
5320-929-9305	BULK	
5320-935-1227	BULK	
5320-935-3538	BULK	
5320-936-6194	BULK	
5320-936-6215	BULK	
5320-936-6216	BULK	

STOCK NUMBER	FIGURE NUMBER	ITEM NUMBER
5320-936-6217	BULK	
5320-936-6219	BULK	
5320-936-6220	BULK	
5320-936-6221	BULK	
5320-936-6222	BULK	
5320-936-6223	BULK	
5320-937-5441	BULK	
5320-937-5442	BULK	
5320-937-5443	BULK	
5320-937-5444	BULK	
5320-945-8174	BULK	
5320-945-8430	BULK	
5320-945-8444	BULK	
5320-952-3849	BULK	
5320-954-8501	BULK	
5320-956-5727	BULK	
5320-965-1764	BULK	
5320-966-0362	BULK	
5320-971-7712	BULK	
5320-971-7713	BULK	
5320-971-7721	BULK	
5320-971-7828	BULK	
5320-971-7843	BULK	
5320-971-7856	BULK	
5320-971-7894	BULK	
5320-971-7918	BULK	
5320-971-8764	BULK	
5320-971-8769	BULK	
5320-971-8963	BULK	
5320-975-0111	BULK	
5320-982-3842	BULK	
5320-984-6540	BULK	
5320-984-7505	BULK	
5320-989-3171	BULK	
5320-990-5286	BULK	
5320-993-7108	BULK	
5320-993-7111	BULK	
5320-993-7112	BULK	
5320-993-8805	BULK	
5320-993-8812	BULK	
5320-993-8813	BULK	
5320-996-8731	BULK	
5320-996-9871	BULK	
5325-015-3034	190	50
5325-015-3035	190	48
5325-017-6414	BULK	
5325-033-4607	31	
5325-045-1875	BULK	
5325-045-1922	11C	65A
5325-045-1922	222	
5325-058-0493	BULK	
5325-060-0976	178	112
5325-061-0122	32	26
5325-067-8124	10	
5325-078-2762	200	
5325-141-3291	11	66C
5325-141-4005	10	7B
5325-141-4006	BULK	
5325-141-7951	249	7
5325-171-4596	18	
5325-171-4680	182	
5325-171-4680	209	
5325-171-4702	18	
5325-171-4702	32	
5325-171-4702	32	38
5325-171-6366	BULK	
5325-174-2888	BULK	
5325-174-2923	19	
5325-174-2924	BULK	
5325-174-5314	BULK	
5325-174-5315	BULK	
5325-174-5316	BULK	
5325-174-5317	190	91
5325-174-9008	207	
5325-174-9008	207	
5325-174-9334	BULK	
5325-184-9846	BULK	
5325-185-0001	BULK	
5325-185-0004	KITS	
5325-185-0012	76	113
5325-185-0012	KITS	
5325-185-0017	BULK	
5325-226-5743	BULK	
5325-231-6589	BULK	
5325-243-5052	204A	3
5325-262-9184	BULK	
5325-263-6632	204	
5325-263-6632	213	
5325-263-6632	221	85
5325-263-6632	256	26
5325-263-6632	265	35
5325-263-6632	268	62
5325-263-6632	KITS	
5325-263-6632	KITS	
5325-263-6648	BULK	
5325-263-6651	117	
5325-263-6651	117	19H
5325-263-6651	129	41D
5325-263-6651	178	138
5325-263-6651	221	17
5325-263-6651	KITS	
5325-270-8890	207	
5325-270-8890	KITS	
5325-275-4480	34	64A
5325-275-4509	BULK	
5325-276-4282	32	18
5325-276-4282	36	
5325-276-4282	37	
5325-276-4282	KITS	
5325-276-4918	BULK	
5325-276-4919	32	
5325-276-4922	34	
5325-276-4922	37	44
5325-276-4924	BULK	
5325-276-4926	16	46
5325-276-4946	16	52
5325-276-4946	19	
5325-276-4946	37A	1
5325-276-4946	KITS	
5325-276-4953	16	51
5325-276-4953	19	12
5325-276-4953	37A	1
5325-276-4953	KITS	
5325-276-4961	BULK	
5325-276-4961	KITS	
5325-276-4970	BULK	
5325-276-4993	192	11
5325-276-5867	BULK	
5325-276-6082	129	40C
5325-276-6082	KITS	
5325-276-6089	265	23
5325-276-6089	268	69
5325-276-6090	208	14A
5325-276-6090	KITS	
5325-276-6091	178	111
5325-276-6091	251	40
5325-276-6100	196	64
5325-276-6100	225	3
5325-276-6100	KITS	
5325-276-6228	256	25
5325-276-6343	BULK	
5325-281-1557	28	8

STOCK NUMBER	FIGURE NUMBER	ITEM NUMBER
5325-281-3538	BULK	
5325-281-4356	37	
5325-281-4782	18	
5325-281-4896	196	
5325-282-0624	10	7A
5325-282-2045	18	149B
5325-282-2047	BULK	
5325-282-7458	BULK	
5325-285-3373	34	
5325-285-3373	183	31
5325-285-3374	11A	16C
5325-285-6264	BULK	
5325-285-6272	18	161A
5325-285-7796	18	
5325-286-6047	192	87
5325-290-0074	207	8
5325-290-1960	198	39
5325-290-1960	209	36
5325-290-1960	KITS	
5325-290-3816	32	44
5325-290-3969	11	121
5325-290-3969	249	10
5325-290-3969	KITS	
5325-290-3971	249	5
5325-290-3971	KITS	
5325-290-3972	11C	82
5325-290-3976	BULK	
5325-290-6163	BULK	
5325-290-8028	18	149D
5325-291-0289	BULK	
5325-291-8359	32	18
5325-291-8359	36	
5325-291-9360	182	
5325-291-9360	183	20
5325-291-9360	184	
5325-291-9360	199	
5325-291-9360	201	1
5325-291-9360	201	100
5325-291-9360	201	16
5325-291-9360	201	26
5325-291-9360	201	37
5325-291-9360	201	44
5325-291-9360	201	64
5325-291-9360	201	78
5325-291-9360	201	89
5325-291-9360	202	24
5325-291-9360	183A	30
5325-291-9366	188	23
5325-291-9366	188	53
5325-291-9366	196	15
5325-291-9366	252	15
5325-321-4269	32	22
5325-321-4269	249	11
5325-321-4269	249	8
5325-359-6854	BULK	
5325-369-2721	11	65D
5325-369-2721	18	
5325-369-2721	18	93C
5325-369-2721	18	95C
5325-369-2721	18	99C
5325-369-2721	32	9
5325-402-5352	32	
5325-421-1776	71	135B
5325-421-1777	71	135A
5325-433-0026	196	
5325-449-2797	BULK	
5325-449-3006	BULK	
5325-449-3022	32	14
5325-449-3022	32	76
5325-458-4827	50	20
5325-489-0928	249	6
5325-489-0928	KITS	
5325-489-1050	182	
5325-489-1050	183	10
5325-489-1050	209	
5325-489-1050	KITS	
5325-505-4798	18	132A
5325-505-4798	32	
5325-505-4798	11C	82
5325-506-8505	11C	1A
5325-530-9021	BULK	
5325-534-8487	BULK	
5325-543-2418	182	
5325-543-2418	183	21
5325-543-2418	184	
5325-543-2418	199	
5325-543-2418	201	1
5325-543-2418	201	100
5325-543-2418	201	16
5325-543-2418	201	26
5325-543-2418	201	37
5325-543-2418	201	44
5325-543-2418	201	53
5325-543-2418	201	64
5325-543-2418	201	78
5325-543-2418	201	89
5325-543-2418	202	22
5325-543-2418	183A	31
5325-550-9159	204	
5325-566-4247	15	
5325-579-6219	193	94
5325-579-7825	18	
5325-582-7773	11	65C
5325-584-0024	18	165A
5325-584-6638	11	122A
5325-584-6638	14	29A
5325-584-6638	11B	24A
5325-584-6638	11C	68A
5325-602-0513	32	
5325-602-0513	32	38
5325-616-5176	182	
5325-619-6807	18	
5325-619-6807	18	93F
5325-619-6807	18	96A
5325-619-6807	18	99F
5325-619-6807	KITS	
5325-619-7216	31	14A
5325-637-2369	18	
5325-637-2369	18	93E
5325-637-2369	18	95E
5325-637-2369	18	99E
5325-637-2369	32	15
5325-638-8088	10	7D
5325-638-8088	18	167A
5325-638-8088	62	7C
5325-638-8088	249	13
5325-638-8088	249	15
5325-638-8088	KITS	
5325-639-4277	BULK	
5325-639-4889	18	149A
5325-639-4889	KITS	
5325-640-9874	183	11
5325-641-0377	14	26
5325-641-0415	18	
5325-641-1632	18	153A
5325-646-7300	BULK	
5325-646-7300	KITS	
5325-649-8560	62	7G
5325-653-1712	62	
5325-653-1712	KITS	
5325-659-4647	62	
5325-684-9439	32	

STOCK NUMBER	FIGURE NUMBER	ITEM NUMBER
5325-684-9535	BULK	
5325-685-0275	18	
5325-685-0275	18	93B
5325-685-0275	18	95B
5325-685-0275	18	99B
5325-685-0275	32	6
5325-685-0275	KITS	
5325-689-8837	BULK	
5325-701-2552	207	
5325-703-1451	BULK	
5325-703-9346	32	21
5325-704-0704	10	9A
5325-716-3561	BULK	
5325-720-6300	BULK	
5325-726-6699	32	14
5325-726-6699	33	57
5325-726-6699	KITS	
5325-726-6701	33	56
5325-726-6701	62	7E
5325-735-5779	18	
5325-754-2240	BULK	
5325-781-1251	14	27
5325-781-1251	KITS	
5325-787-8677	BULK	
5325-787-8677	KITS	
5325-805-6793	BULK	
5325-810-7708	BULK	
5325-814-2453	204	
5325-814-6749	32	27
5325-817-0510	184	57
5325-817-0510	187	10
5325-817-0510	187	17
5325-817-0510	187	28
5325-817-0510	201	15
5325-817-0510	201	25
5325-817-0510	201	51
5325-825-0159	31	
5325-826-3620	18	153B
5325-826-3620	32	
5325-826-3620	32	44
5325-827-1378	BULK	
5325-832-5772	284	35
5325-832-5773	284	20
5325-832-5773	285	20
5325-837-9134	11A	83
5325-837-9134	271	14
5325-853-9713	BULK	
5325-854-2183	BULK	
5325-854-9376	BULK	
5325-866-6788	41	
5325-868-8471	BULK	
5325-870-0981	204A	113
5325-885-8680	18	136
5325-885-8680	18	3
5325-887-1478	253	43B
5325-887-1478	255	3B
5325-887-1478	256	11
5325-894-2588	BULK	
5325-907-0030	81	59A
5325-907-0030	92	28
5325-907-0030	92	82
5325-912-9983	32	54
5325-948-0473	BULK	
5325-948-3209	BULK	
5325-948-3210	BULK	
5325-948-3211	BULK	
5325-948-3212	BULK	
5325-952-4076	BULK	
5325-960-2410	200	
5325-960-2410	BULK	
5325-986-6123	BULK	
5325-986-6123	KITS	
5325-995-9008	204A	145
5325-998-3305	31	13A
5325-998-3305	KITS	
5330-001-4786	69	4A
5330-001-4786	70	19A
5330-006-8217	188	68
5330-014-4651	251	14A
5330-014-8359	62	
5330-019-8024	129	23G
5330-023-6211	248	62
5330-023-7623	62	58
5330-023-7623	QC1	33
5330-023-7623	273	18
5330-023-7623	KITS	
5330-023-7626	62	
5330-023-7626	138	57
5330-023-7626	273	15
5330-023-7626	KITS	
5330-031-8311	258A	12
5330-033-2183	82	27
5330-042-5902	16	55
5330-050-1211	72	93
5330-050-1211	74	4
5330-051-7034	BULK	
5330-051-7160	149	52
5330-053-3948	216	12
5330-054-1450	BULK	
5330-054-8801	74	24
5330-055-2940	83	122
5330-060-4325	63	87
5330-061-2209	97	6
5330-061-2209	KITS	
5330-062-1248	183	6
5330-064-2570	63	29
5330-064-2570	125	16
5330-064-2570	125	21
5330-064-2570	130	27
5330-064-2570	133	10
5330-064-2570	152	3
5330-064-2570	153	9
5330-064-2570	156	2
5330-064-4641	81	81
5330-067-3358	88	
5330-067-6408	49	53
5330-067-8292	76	135C
5330-067-8292	76	60C
5330-069-0766	210	18
5330-069-0766	210	26
5330-069-0766	210	45
5330-069-0767	210	62
5330-069-6424	88	101
5330-069-6424	89	134
5330-069-6424	QC1	182
5330-069-6424	KITS	
5330-070-7835	11A	91
5330-075-4795	26	16
5330-075-4796	26	17
5330-075-5642	95	15C
5330-076-6065	62	
5330-076-9068	21	
5330-078-3881	211	41
5330-078-3881	218	45
5330-078-3881	219	
5330-078-3881	219	37
5330-079-2672	95	176
5330-079-6048	81	37
5330-079-6048	KITS	
5330-079-7381	117	84

STOCK NUMBER	FIGURE NUMBER	ITEM NUMBER
5330-079-7381	119	403
5330-079-7381	129	
5330-080-0811	71	4
5330-080-3558	129	22C
5330-081-5406	211	16
5330-081-5406	218	21
5330-081-5406	218	34
5330-081-5406	219	13
5330-081-5406	219	64
5330-081-5406	219	68
5330-081-5406	219A	163
5330-081-5406	219A	58
5330-085-2345	218	40A
5330-085-2345	219	43
5330-085-2345	219	84
5330-085-2345	219A	119
5330-085-2345	219A	14
5330-087-7479	62	34
5330-087-7479	QC1	27
5330-088-8719	133	4
5330-095-8992	165	39
5330-095-8993	165	39
5330-102-8554	91	16B
5330-103-5004	11A	23C
5330-104-6720	83	232
5330-104-6780	52	19
5330-104-6780	105	25
5330-104-6780	105	26
5330-105-0511	88	2
5330-106-8355	62	
5330-111-0766	67	61
5330-111-3720	67	26
5330-118-2234	67	37
5330-127-7220	67	67
5330-132-1490	216	14
5330-132-1491	216	11A
5330-133-1968	216	3
5330-135-7593	102	48
5330-135-7593	103	41
5330-137-2362	68	34
5330-141-3577	170	12
5330-141-3577	171	14
5330-141-5081	71	43
5330-141-5081	KITS	
5330-141-5081	KITS	
5330-141-5081	KITS	
5330-143-7095	88	37A
5330-143-7095	KITS	
5330-143-8561	76	53
5330-143-8562	76	125
5330-143-8562	76	69
5330-143-8562	89	69
5330-143-8571	188	
5330-143-8571	196	
5330-143-8571	204	
5330-143-8578	64A	34
5330-143-8680	197A	7
5330-151-4125	258A	9
5330-154-0558	265	280
5330-154-0558	268	243
5330-164-0666	219A	141
5330-164-0666	219A	29
5330-169-0564	65	44A
5330-169-0846	150	8
5330-171-2865	218	10
5330-171-2865	218	14
5330-171-2865	219A	159
5330-171-2865	219A	39
5330-171-5044	265	117
5330-171-5044	265	119
5330-171-5044	265	121
5330-171-5044	268	116
5330-171-5889	265	112
5330-171-5889	265	115
5330-171-5889	268	112
5330-171-6545	MSUP	
5330-171-6649	266	46
5330-171-6748	124	11
5330-171-6748	125	46
5330-171-6748	128	37
5330-171-6748	133	41
5330-171-6748	133	54
5330-171-6748	133	6
5330-171-6748	136	6
5330-171-6748	153	20
5330-171-6749	145	21
5330-171-6758	124	24
5330-171-6758	272	45
5330-171-6758	272	50
5330-171-6767	47	15A
5330-171-6768	145	10
5330-171-6768	151	7
5330-171-7186	262A	6
5330-180-9031	65	68
5330-182-1288	BULK	
5330-182-3033	150A	12
5330-182-3064	150	3
5330-182-3083	150A	15
5330-182-3084	150A	24
5330-182-3084	150A	8
5330-182-3162	65	6
5330-182-3163	65	6
5330-182-3444	KITS	
5330-182-3445	KITS	
5330-182-3505	183A	21
5330-186-1273	218	45A
5330-186-1273	219A	113
5330-186-1273	219A	8
5330-186-6299	183A	11
5330-186-6301	68	3
5330-187-3945	69	12
5330-187-3945	70	24A
5330-189-6675	183A	43
5330-194-3713	58	4
5330-194-3719	155	9
5330-194-3722	155	3
5330-194-3722	219A	135
5330-194-3722	219A	37
5330-196-5381	145	12
5330-197-6620	18	100A
5330-197-6620	18	94A
5330-197-6620	275	14K
5330-202-1521	215	35
5330-226-0396	52	10
5330-226-0396	105	4
5330-227-9483	145	22
5330-234-6295	76	75
5330-234-6296	76	168B
5330-234-6296	76	62
5330-234-6296	89	75
5330-234-6297	71	29
5330-234-6297	89	6
5330-234-6298	76	150
5330-234-6298	76	87
5330-235-1670	50	21
5330-242-6627	216	8
5330-242-6635	165	55
5330-242-6635	165	62
5330-246-6403	139	113
5330-248-3831	215	27
5330-248-3832	BULK	
5330-248-3833	214	20

STOCK NUMBER	FIGURE NUMBER	ITEM NUMBER
5330-248-3833	216	58
5330-248-3834	BULK	
5330-248-3835	213	
5330-248-3835	214	16
5330-248-3835	220	
5330-248-3835	KITS	
5330-248-3836	216	60
5330-248-3838	BULK	
5330-248-3839	215	24
5330-248-3845	KITS	
5330-248-3846	262	54B
5330-248-3848	213	
5330-248-3848	220	
5330-248-3849	BULK	
5330-248-3849	KITS	
5330-248-5142	71	77
5330-248-5142	KITS	
5330-250-0224	KITS	
5330-250-0227	KITS	
5330-250-0230	214	9
5330-250-0230	KITS	
5330-250-0236	219	15
5330-250-0236	219	89
5330-250-0236	KITS	
5330-250-0236	219A	154
5330-250-0236	219A	55
5330-250-1217	165	15
5330-251-8839	81	34
5330-251-8839	81	47
5330-251-8839	117	73F
5330-251-8839	119	388
5330-251-8839	129	111A
5330-251-8839	129	17
5330-251-8839	129	2A
5330-251-8839	129	44
5330-251-8839	129	45A
5330-251-8839	129	46A
5330-251-8839	129	46C
5330-251-8839	129	65A
5330-251-8839	129	66A
5330-251-8839	129	70B
5330-251-8839	129	71A
5330-251-8839	129	72A
5330-251-8839	129	73A
5330-251-8839	129	78A
5330-251-8839	129	88A
5330-251-8839	129	98
5330-251-8839	139	49
5330-251-8839	139	98
5330-251-8839	KITS	
5330-251-9376	218	45B
5330-251-9376	219A	10
5330-251-9376	219A	115
5330-255-0105	67	66
5330-260-9311	228	145
5330-260-9338	260	40
5330-263-8007	81	171
5330-263-8011	KITS	
5330-263-8028	QC1	59
5330-263-8028	QC1	64
5330-263-8028	213	
5330-263-8028	213	
5330-263-8028	217	
5330-263-8028	220	
5330-263-8028	221	30
5330-263-8028	221	70
5330-263-8028	221	81
5330-263-8028	257	18C
5330-263-8028	257	21A
5330-263-8028	262	41
5330-263-8028	262	50
5330-263-8028	273	18B
5330-263-8028	KITS	
5330-263-8028	217A	11
5330-263-8028	217B	14
5330-263-8030	115	41
5330-263-8030	213	
5330-263-8030	218	
5330-263-8030	220	
5330-263-8030	221	105
5330-263-8030	221	107
5330-263-8030	221	11
5330-263-8030	221	125
5330-263-8030	221	130
5330-263-8030	221	135
5330-263-8030	221	37
5330-263-8030	221	59
5330-263-8030	221	61
5330-263-8030	221	79
5330-263-8030	221	88
5330-263-8030	221	89
5330-263-8030	221	90
5330-263-8030	251	18C
5330-263-8030	KITS	
5330-263-8030	219A	169
5330-263-8030	219A	64
5330-263-8031	211	49
5330-263-8031	218	52
5330-263-8031	219	47
5330-263-8031	219	94
5330-263-8031	KITS	
5330-263-8031	219A	124
5330-263-8031	219A	19
5330-263-8033	62	
5330-263-8033	QC1	76
5330-263-8033	217	
5330-263-8033	KITS	
5330-263-8033	217A	24
5330-263-8033	217B	25
5330-263-8034	211	
5330-263-8034	213	
5330-263-8034	218	
5330-263-8034	220	
5330-263-8034	221	125
5330-263-8034	221	135
5330-263-8034	221	30
5330-263-8034	221	31
5330-263-8034	221	35
5330-263-8034	221	59
5330-263-8034	221	70
5330-263-8034	221	89
5330-263-8034	221	90
5330-263-8034	221	96
5330-263-8034	221	98
5330-263-8034	KITS	
5330-263-8034	219A	172
5330-263-8034	219A	67
5330-265-1076	BULK	
5330-265-1088	216	69
5330-265-1090	215	23
5330-265-1092	260	39
5330-265-1093	216	33C
5330-265-1093	219	18
5330-265-1093	219	86
5330-265-1093	KITS	
5330-265-1093	219A	158
5330-265-1093	219A	51
5330-270-8467	BULK	
5330-285-9842	QC1	88
5330-285-9842	117	
5330-285-9842	119	254
5330-285-9842	119	258

STOCK NUMBER	FIGURE NUMBER	ITEM NUMBER
5330-285-9842	119	332
5330-285-9842	119	336
5330-285-9842	129	
5330-285-9842	129	1A
5330-285-9842	129	10A
5330-285-9842	129	13
5330-285-9842	129	27A
5330-285-9842	129	5
5330-285-9842	129	66A
5330-285-9842	129	67A
5330-285-9842	129	7A
5330-285-9842	129	75B
5330-285-9842	129	77
5330-285-9842	129	9
5330-285-9842	139	33
5330-285-9842	139	81
5330-285-9842	143	12
5330-285-9842	143	9
5330-285-9842	KITS	
5330-286-0614	97	13
5330-286-0614	97	19
5330-286-0614	97	9
5330-286-0614	98	9
5330-286-0614	99	9
5330-291-3074	81	172
5330-291-3271	262	9
5330-291-3273	218	22
5330-291-3273	218	8F
5330-291-3273	219A	145
5330-291-3273	219A	150
5330-291-3273	219A	33
5330-291-3273	219A	44
5330-291-3300	216	19
5330-291-7342	218	5
5330-291-7342	219A	109
5330-291-7342	219A	4
5330-291-7350	216	11
5330-292-0570	59	17
5330-292-0570	124	65
5330-292-0570	132	25
5330-292-0570	145	15
5330-292-0570	146	30
5330-292-0570	KITS	
5330-292-0577	65	39
5330-292-0577	272	35
5330-292-0577	272	8
5330-292-0580	121	19
5330-292-0580	121	23
5330-292-0580	124	10
5330-292-0580	124	67
5330-292-0580	125	45
5330-292-0580	133	40
5330-292-0580	133	53
5330-292-0580	133	7
5330-292-0580	136	5
5330-292-0580	147	8
5330-292-0580	153	21
5330-292-0580	170	50
5330-292-0580	171	50
5330-292-0580	224	48A
5330-292-0580	247	22
5330-292-0580	272	8
5330-297-6308	197	2
5330-297-6468	26	
5330-297-6527	218	12E
5330-297-6527	218	8D
5330-297-6527	KITS	
5330-297-9987	53	15
5330-297-9987	54	40
5330-298-4929	KITS	
5330-298-5555	262	38
5330-299-1058	265	79
5330-299-1058	268	37
5330-308-6554	160	4
5330-326-6792	215	16
5330-337-8593	204	
5330-337-8593	219A	148
5330-337-8593	219A	47
5330-350-9013	26	
5330-350-9013	112	143
5330-350-9013	112	153
5330-350-9013	112	161
5330-350-9013	112	83
5330-350-9013	119	62
5330-350-9013	KITS	
5330-350-9013	217B	30
5330-373-3907	154	12
5330-408-5150	150	18
5330-409-6813	150A	16
5330-410-2479	64A	29
5330-443-1941	274	56
5330-446-2910	89	132
5330-449-1462	261	31
5330-456-6040	63	125
5330-456-6040	138	70
5330-462-0420	64A	15
5330-462-3203	251	29A
5330-463-0219	76	143
5330-472-7317	91	22
5330-475-2578	91	9
5330-477-6342	64A	14
5330-485-4340	BULK	
5330-489-3466	149	8
5330-490-5915	64A	28
5330-493-9484	KITS	
5330-498-6553	67	6
5330-515-4916	154	13
5330-524-0547	62	
5330-526-7220	261	6
5330-527-8522	BULK	
5330-530-1998	BULK	
5330-530-3959	83	91
5330-530-3959	91	18
5330-530-4341	BULK	
5330-531-2068	71	23
5330-531-2068	71	86
5330-531-2068	75	88
5330-531-2068	79	18
5330-531-2068	83	158
5330-531-2068	83	51
5330-531-2068	88	100D
5330-531-2068	95	143
5330-531-2068	95	165
5330-531-2068	95	169
5330-531-2068	95	172
5330-531-2068	95	8
5330-531-2068	139	79
5330-531-2068	KITS	
5330-531-2070	62	
5330-531-2070	81	117
5330-531-2070	87	20
5330-531-2070	93	19
5330-531-2070	93	21
5330-531-2070	93	26
5330-531-2070	95	178
5330-531-2070	QC1	141
5330-531-2070	217	
5330-531-2070	KITS	
5330-531-2070	217A	18
5330-531-2070	217A	19
5330-531-2070	217B	20
5330-542-0920	51	62

STOCK NUMBER	FIGURE NUMBER	ITEM NUMBER
5330-542-1329	73	49
5330-542-1329	126	11
5330-542-1329	128	15
5330-542-1329	KITS	
5330-542-1365	124	47
5330-542-1365	130	4
5330-542-1365	132	35
5330-542-1365	148	15
5330-542-1365	154	8
5330-542-1398	49	65
5330-542-1398	247	16
5330-542-1421	83	50
5330-542-1422	76	136
5330-542-1422	76	61A
5330-542-1422	81	76
5330-542-1422	83	156
5330-542-1422	83	21K
5330-542-1422	KITS	
5330-542-1456	76	61
5330-542-1456	81	31
5330-542-1456	83	117
5330-542-1456	KITS	
5330-542-1457	89	85
5330-542-1586	47	11
5330-542-1586	74	69
5330-543-3041	47	10
5330-543-3041	102	45A
5330-543-3041	102	5
5330-543-3041	102	6A
5330-543-3041	103	40A
5330-543-3041	103	5
5330-543-7087	59	18
5330-543-7087	132	26
5330-543-7087	146	29
5330-543-7088	144	3
5330-543-7089	73	37
5330-543-7090	49	4
5330-543-7090	123	2
5330-543-7090	125	14
5330-543-7090	126	2
5330-543-7090	127	4
5330-543-7090	128	19A
5330-543-7090	142	3
5330-543-7090	153	22
5330-543-7090	KITS	
5330-543-7092	53	16
5330-543-7092	54	39
5330-550-6742	BULK	
5330-550-6753	BULK	
5330-550-7098	148	16
5330-551-8441	67	4
5330-551-8441	124	27
5330-551-8441	124	50
5330-551-8441	127	18
5330-551-8441	134	80
5330-551-8441	136	12
5330-558-0364	88	12
5330-558-0364	89	17
5330-558-0364	95	106
5330-558-0364	95	47
5330-558-0364	95	48
5330-558-0364	95	56
5330-558-0364	95	64
5330-558-0364	95	70
5330-558-0364	95	76
5330-558-0364	95	77
5330-558-0364	95	81
5330-558-0364	95	94
5330-558-0364	95	98
5330-558-0364	QC1	177
5330-558-0364	KITS	
5330-558-1102	KITS	
5330-558-1103	76	36
5330-558-1103	95	124
5330-558-1103	95	137
5330-558-1103	95	141
5330-558-1103	95	2
5330-558-1103	95	34
5330-558-1103	95	4
5330-558-1103	KITS	
5330-558-1105	BULK	
5330-559-1939	KITS	
5330-559-6182	26	18
5330-559-6182	62	60E
5330-559-6182	QC1	70
5330-559-6182	117	69B
5330-559-6182	117	89
5330-559-6182	119	300
5330-559-6182	129	124
5330-559-6182	129	131
5330-559-6182	133	12
5330-559-6182	217	19
5330-559-6182	217	21
5330-559-6182	KITS	
5330-559-6182	217A	3
5330-559-6182	217B	7
5330-559-6184	57	10
5330-559-6184	155	9
5330-559-6184	272	54
5330-576-3206	144	10
5330-576-3269	211	14A
5330-576-3269	211	18B
5330-576-3269	211	2
5330-576-3269	211	33
5330-576-3269	211	38
5330-576-3269	211	41B
5330-576-3269	211	51
5330-576-3269	211	7
5330-576-3269	219	
5330-576-3269	KITS	
5330-576-4441	154	11
5330-576-9732	155	3
5330-576-9733	49	13A
5330-576-9733	138	38
5330-576-9925	76	77
5330-576-9925	95	154
5330-576-9925	95	93
5330-576-9925	248	31
5330-576-9925	KITS	
5330-579-1070	BULK	
5330-579-3156	102	57
5330-579-3156	113	3
5330-579-3156	133	57
5330-579-3158	18	132A
5330-579-3158	65	29
5330-579-3158	133	25
5330-579-3158	133	5
5330-579-3158	133	65
5330-579-3158	134	48
5330-579-3158	224	32
5330-579-3163	73	38
5330-579-3163	145	24
5330-579-3165	272	47
5330-579-3165	272	52
5330-579-3166	73	29
5330-579-3166	74	34
5330-579-6860	272	41
5330-579-6861	49	17
5330-579-7543	53	17
5330-579-7543	53	40
5330-579-7543	54	30
5330-579-7543	54	37

STOCK NUMBER	FIGURE NUMBER	ITEM NUMBER
5330-579-7544	140	3
5330-579-7544	141	15
5330-579-7544	KITS	
5330-579-7548	71	31
5330-579-7548	71	56
5330-579-7548	71	84
5330-579-7548	71	94
5330-579-7548	KITS	
5330-579-7548	KITS	
5330-579-7549	87	18
5330-579-7549	87	6
5330-579-7914	127	12
5330-579-7916	137	24
5330-579-7916	137	28
5330-579-7918	49	37
5330-579-7925	133	73
5330-579-7927	BULK	
5330-579-8108	124	75
5330-579-8108	133	51
5330-579-8108	133	70
5330-579-8108	137	26
5330-579-8108	137	38
5330-579-8108	224	15
5330-579-8156	144	4
5330-579-9833	266	13
5330-579-9833	267	6
5330-579-9833	190A	4
5330-580-5055	63	15
5330-580-5055	124	58
5330-580-5056	45	31C
5330-580-5056	111	3
5330-580-5056	142	1A
5330-580-5937	82	8
5330-580-9762	KITS	
5330-582-1532	51	51
5330-582-1539	47	9A
5330-582-1539	102	6
5330-582-1539	102	68
5330-582-1539	103	6
5330-582-1548	49	39
5330-582-1548	122	17
5330-582-1548	122	33
5330-582-1548	124	18
5330-582-1548	127	2
5330-582-1548	130	21
5330-582-1548	136	14
5330-582-1548	151	16
5330-582-1551	124	48
5330-582-1551	132	36
5330-582-2111	133	58
5330-582-2113	124	76
5330-582-2113	133	52
5330-582-2113	137	25
5330-582-2113	137	37
5330-582-2116	133	13
5330-582-2118	133	72
5330-582-2119	57	7A
5330-582-2119	272	55
5330-582-2133	18	132A
5330-582-2133	49	39A
5330-582-2133	65	42
5330-582-2133	65	43
5330-582-2133	65	45
5330-582-2133	73	40
5330-582-2133	102	27
5330-582-2133	103	23
5330-582-2133	122	18
5330-582-2133	122	34
5330-582-2133	124	17
5330-582-2133	127	3
5330-582-2133	130	22
5330-582-2133	134	32
5330-582-2133	136	15
5330-582-2133	138	4
5330-582-2133	148	11
5330-582-2133	151	15
5330-582-2133	265	74
5330-582-2133	266	3
5330-582-2133	266	30
5330-582-2133	266	5
5330-582-2133	267	9
5330-582-2133	268	44
5330-582-2133	272	4
5330-582-2136	51	47
5330-582-2146	49	26
5330-582-2146	59	15
5330-582-2146	136	2
5330-582-2578	BULK	
5330-582-2855	74	67
5330-582-2855	102	10
5330-582-2855	103	12
5330-582-2855	113	11
5330-582-2855	113	5
5330-582-2855	134	20
5330-582-2855	134	27
5330-582-2855	134	35
5330-582-2855	247	26
5330-582-2855	265	111
5330-582-2855	265	114
5330-582-2855	268	113
5330-582-2856	BULK	
5330-582-7481	51	55
5330-584-0149	71	18
5330-584-0149	76	105
5330-584-0149	81	53
5330-584-0149	83	165
5330-584-0149	83	58
5330-584-0149	88	20
5330-584-0149	89	22
5330-584-0149	95	79
5330-584-0149	KITS	
5330-584-0150	71	25
5330-584-0150	71	8
5330-584-0150	76	107
5330-584-0150	76	42
5330-584-0150	81	55
5330-584-0150	83	167
5330-584-0150	83	262
5330-584-0150	83	60
5330-584-0150	88	22
5330-584-0150	89	24
5330-584-0150	KITS	
5330-584-0151	267	19
5330-584-0151	274	47
5330-584-0263	74	38
5330-584-0263	111	11
5330-584-0263	124	23
5330-584-0263	224	12
5330-584-0263	272	44
5330-584-0263	272	49
5330-584-0265	49	5
5330-584-0265	73	46
5330-584-0265	105	21
5330-584-0265	107	10
5330-584-0265	120	18
5330-584-0265	123	1
5330-584-0265	125	13
5330-584-0265	126	3
5330-584-0265	127	5
5330-584-0265	128	19
5330-584-0265	134	18
5330-584-0265	134	23

STOCK NUMBER	FIGURE NUMBER	ITEM NUMBER
5330-584-0265	134	29
5330-584-0265	134	37
5330-584-0265	135	9
5330-584-0265	142	4
5330-584-0265	148	5
5330-584-0265	148	9
5330-584-0265	152	11
5330-584-0265	153	23
5330-584-0265	156	11
5330-584-0265	272	18
5330-584-0265	272	22
5330-584-0265	272	30
5330-584-0265	KITS	
5330-584-0266	52	
5330-584-0266	57	9
5330-584-0266	59	16E
5330-584-0266	65	17
5330-584-0266	65	36
5330-584-0266	73	60
5330-584-0266	73	62
5330-584-0266	105	27
5330-584-0266	113	7
5330-584-0266	122	47
5330-584-0266	123	14
5330-584-0266	124	15
5330-584-0266	125	29
5330-584-0266	125	33
5330-584-0266	125	38
5330-584-0266	125	42
5330-584-0266	126	14
5330-584-0266	126	3
5330-584-0266	127	8
5330-584-0266	128	13
5330-584-0266	128	19
5330-584-0266	130	32
5330-584-0266	132	14
5330-584-0266	133	39
5330-584-0266	133	48
5330-584-0266	142	4
5330-584-0266	146	18
5330-584-0266	148	3
5330-584-0266	151	9
5330-584-0266	183	35
5330-584-0266	247	2
5330-584-0266	265	116
5330-584-0266	265	118
5330-584-0266	265	120
5330-584-0266	268	115
5330-584-1038	49	26A
5330-584-1038	59	14
5330-584-1038	59	6
5330-584-1038	136	3
5330-584-1222	216	66
5330-584-1231	BULK	
5330-584-1840	63	16
5330-584-1840	124	57
5330-584-1840	130	16
5330-584-1840	132	3
5330-584-1840	140	23
5330-584-1840	141	
5330-584-1840	142	12
5330-584-1840	142	8
5330-584-1840	152	7
5330-584-1840	156	4
5330-585-0874	21	5A
5330-585-0874	KITS	
5330-585-1064	183A	34
5330-585-1065	81	173
5330-585-1065	83	309
5330-585-1066	82	26
5330-585-1068	83	109
5330-585-1068	83	92
5330-585-6632	138	18
5330-585-6663	73	45
5330-585-7723	49	44A
5330-585-7723	65	21
5330-585-7723	102	2
5330-585-7723	102	20
5330-585-7723	103	18
5330-585-7723	130	10
5330-585-7723	132	39
5330-585-7723	132	8
5330-585-7723	136	19
5330-585-7723	146	13
5330-585-7723	274	9
5330-585-7724	72	35
5330-585-7724	72	66
5330-585-7724	73	11
5330-585-7724	139	53C
5330-585-7724	KITS	
5330-585-8641	154	7
5330-585-9771	52	12
5330-585-9771	105	12
5330-585-9771	122	16
5330-598-2260	160	3
5330-599-2537	218	22A
5330-599-2537	219A	137
5330-599-2537	219A	147
5330-599-2537	219A	35
5330-599-2537	219A	46
5330-599-2631	266	45
5330-599-2735	56	7
5330-599-2766	262	54C
5330-599-2766	219A	125
5330-599-2766	219A	20
5330-599-2934	59	35
5330-599-2934	133	23
5330-599-2934	154	19
5330-599-9352	213	
5330-599-9352	213	9
5330-608-0287	18	153C
5330-608-6432	74	18
5330-608-6432	74	32
5330-608-6432	74	53
5330-618-0488	71	54
5330-618-0799	51	43
5330-618-0799	53	35
5330-618-0799	54	24
5330-618-0799	63	27
5330-618-0799	67	16
5330-618-0799	120	19
5330-618-0799	122	43
5330-618-0799	127	14
5330-618-0799	128	34
5330-618-0799	146	6
5330-618-0799	149	3
5330-618-0799	153	4
5330-618-0799	224	37
5330-618-0799	274	5
5330-618-0801	144	11
5330-618-0801	151	8
5330-618-0801	224	8
5330-618-1603	51	52
5330-618-1603	274	41
5330-618-1657	83	44
5330-618-1920	65	27
5330-618-1920	103	2
5330-618-1920	123	11
5330-618-2515	83	32
5330-618-2515	KITS	
5330-618-2516	82	25
5330-618-2518	83	64

STOCK NUMBER	FIGURE NUMBER	ITEM NUMBER
5330-618-2518	KITS	
5330-618-3754	73	36
5330-618-3754	102	11
5330-618-3754	103	13
5330-618-3754	107	2
5330-618-3754	KITS	
5330-618-4603	274	18
5330-618-5361	65	48
5330-618-5361	121	17
5330-618-5361	123	17
5330-618-5361	140	22
5330-618-5361	141	
5330-618-5361	142	11
5330-618-5361	148	10
5330-618-5362	KITS	
5330-618-5902	102	4
5330-618-5902	103	4
5330-618-6113	145	11
5330-618-6282	53	23
5330-618-6282	54	47
5330-618-8893	122	24
5330-618-8893	122	40
5330-618-9227	55	10
5330-621-8376	64A	40
5330-621-8376	64A	56
5330-623-4372	63	95A
5330-624-1855	53	22
5330-624-1855	54	48
5330-624-1855	58	5
5330-630-5958	133	24
5330-631-1341	65	15
5330-631-1341	74	63
5330-631-1341	132	23
5330-631-1341	132	32
5330-631-1341	140	13
5330-631-1341	146	27
5330-631-1341	258A	4
5330-631-1342	117	
5330-631-1342	129	
5330-631-1342	148	24
5330-631-1342	KITS	
5330-631-1346	124	37
5330-631-1346	128	39
5330-640-9613	167	16
5330-641-0231	47	16
5330-641-0693	BULK	
5330-641-1481	51	61
5330-641-2716	171	12
5330-641-2726	215	7
5330-641-3407	57	8
5330-641-3763	74	56
5330-641-3763	102	49
5330-641-3763	103	42
5330-641-4277	76	179D
5330-641-4277	76	58B
5330-641-4277	83	107
5330-641-4277	88	24D
5330-641-4277	88	84H
5330-641-4277	88	87B
5330-641-4277	89	118
5330-641-7517	170	10
5330-641-7517	171	12
5330-670-4421	62	
5330-682-4743	BULK	
5330-684-2164	74	57
5330-684-3206	129	2A
5330-684-3206	129	46A
5330-684-3206	129	46C
5330-684-3206	129	65A
5330-684-3206	129	66A
5330-684-3206	129	71A
5330-684-3206	129	72A
5330-684-3206	129	98
5330-684-3206	KITS	
5330-684-3290	49	7A
5330-684-3419	49	63
5330-684-3419	63	28
5330-684-3419	63	36
5330-684-3419	65	22
5330-684-3419	65	24
5330-684-3419	121	4
5330-684-3419	122	25
5330-684-3419	122	41
5330-684-3419	125	15
5330-684-3419	125	20
5330-684-3419	130	28
5330-684-3419	133	9
5330-684-3419	134	53
5330-684-3419	138	9
5330-684-3419	152	4
5330-684-3419	153	10
5330-684-3419	156	3
5330-684-3420	102	
5330-684-3420	103	16A
5330-684-3420	121	10
5330-684-3420	121	22
5330-684-3420	124	33
5330-684-3420	124	39
5330-684-3420	124	53
5330-684-3420	124	62
5330-684-3420	127	11
5330-684-3420	132	9
5330-684-3420	137	30
5330-684-3420	146	14
5330-684-3420	148	28
5330-684-3420	152	8
5330-684-3420	153	12
5330-684-3420	156	8
5330-684-7784	76	51B
5330-684-7784	89	88
5330-689-8217	76	124
5330-691-0144	72	30
5330-691-0144	72	61
5330-691-0144	73	6
5330-691-0144	KITS	
5330-691-0145	65	20
5330-691-0145	65	7
5330-691-0145	124	72
5330-691-0145	127	16
5330-691-0145	140	7
5330-691-0145	141	20
5330-691-0145	224	41
5330-691-0145	KITS	
5330-695-4636	149	90
5330-702-1048	74	37
5330-702-1048	102	6A
5330-702-4712	82	29
5330-702-4713	83	183
5330-702-4713	83	93
5330-702-4713	91	17
5330-702-4716	83	373
5330-702-4726	132	22
5330-702-4726	132	31
5330-702-4726	146	26
5330-702-5220	102	57
5330-702-5220	103	50
5330-702-5220	130	7
5330-702-5643	63	127
5330-702-5643	102	43
5330-702-5643	103	36
5330-702-5643	138	71
5330-702-5643	140	11

STOCK NUMBER	FIGURE NUMBER	ITEM NUMBER
5330-702-5643	151	4
5330-702-5643	224	7
5330-702-5643	258A	7
5330-708-7746	73	46
5330-720-2859	274	58
5330-720-3652	124	28
5330-720-3652	124	51
5330-720-3652	127	17
5330-725-0758	76	87
5330-725-0758	83	369
5330-725-0758	KITS	
5330-725-0763	82	10
5330-725-4025	BULK	
5330-725-4561	71	100
5330-725-4561	83	143
5330-725-4561	KITS	
5330-725-5720	137	21
5330-726-1235	81	87
5330-726-1235	88	35
5330-726-3497	51	54
5330-726-4152	232	27
5330-726-9307	88	36
5330-727-2240	76	9A
5330-727-2637	127	15
5330-727-2637	134	12
5330-727-2637	148	25
5330-727-2637	224	19
5330-727-2637	KITS	
5330-727-6160	BULK	
5330-729-5254	76	104
5330-729-5254	KITS	
5330-752-8727	71	103
5330-752-8727	76	80
5330-752-8727	76	83
5330-752-8727	83	135
5330-752-8727	KITS	
5330-752-8806	216	66
5330-754-4168	97	
5330-754-4168	98	
5330-754-4168	99	
5330-754-4169	79	50
5330-754-4169	96	30
5330-754-4170	79	49
5330-754-4170	96	29
5330-754-4171	79	45
5330-754-4171	96	25
5330-754-5953	79	38
5330-754-5953	96	21
5330-754-5954	79	35
5330-754-5954	96	18
5330-754-7444	79	37
5330-754-7444	96	20
5330-755-6700	28	
5330-755-6701	28	
5330-758-9798	128	27
5330-759-0785	BULK	
5330-759-0786	18	13
5330-759-0786	BULK	
5330-762-0060	BULK	
5330-762-2892	49	508
5330-766-6664	11A	87
5330-767-0418	BULK	
5330-776-4184	97	21
5330-776-4184	98	11
5330-776-4184	98	4
5330-776-4184	99	11
5330-776-4184	99	4
5330-777-6348	176	5
5330-777-6348	177	4
5330-778-9665	149	92
5330-781-3299	65	63
5330-781-4498	76	9
5330-782-0124	52	21
5330-782-1179	BULK	
5330-793-6902	BULK	
5330-800-5180	76	109A
5330-800-5180	81	33A
5330-800-5180	83	110A
5330-800-5182	82	3
5330-800-9721	102	68
5330-801-3440	137	23
5330-802-2130	267	42
5330-802-5905	124	20
5330-803-7208	102	23
5330-803-7208	103	21
5330-803-7208	133	62
5330-803-7208	228	
5330-803-7208	272	6
5330-803-8120	88	4
5330-803-8120	KITS	
5330-803-9886	76	143D
5330-804-5694	49	23
5330-804-5694	59	16C
5330-804-5694	117	73J
5330-804-5694	129	
5330-804-5694	129	109A
5330-804-5694	129	15A
5330-804-5694	129	16A
5330-804-5694	129	17
5330-804-5694	129	18
5330-804-5694	129	18A
5330-804-5694	129	19A
5330-804-5694	129	27A
5330-804-5694	129	30
5330-804-5694	129	63A
5330-804-5694	129	78A
5330-804-5694	139	37
5330-804-5694	139	38
5330-804-5694	139	85
5330-804-5694	139	86
5330-804-5694	KITS	
5330-804-5695	63	94
5330-804-5695	72	102
5330-804-5695	72	29
5330-804-5695	72	60
5330-804-5695	72	89
5330-804-5695	72	94
5330-804-5695	73	5
5330-804-5695	74	14
5330-804-5695	74	5
5330-804-5695	QC1	108
5330-804-5695	QC1	118
5330-804-5695	QC1	120
5330-804-5695	QC1	128
5330-804-5695	QC1	136
5330-804-5695	QC1	138
5330-804-5695	QC1	92
5330-804-5695	QC1	97
5330-804-5695	102	28
5330-804-5695	103	24
5330-804-5695	109	
5330-804-5695	109	128
5330-804-5695	109	14A
5330-804-5695	109	27
5330-804-5695	109	29
5330-804-5695	109	3
5330-804-5695	109	36
5330-804-5695	109	40
5330-804-5695	109	50
5330-804-5695	109	53A
5330-804-5695	109	55C
5330-804-5695	109	61E

STOCK NUMBER	FIGURE NUMBER	ITEM NUMBER
5330-804-5695	109	62B
5330-804-5695	109	71A
5330-804-5695	109	77E
5330-804-5695	110	34
5330-804-5695	110	35
5330-804-5695	110	78
5330-804-5695	112	1
5330-804-5695	112	14
5330-804-5695	112	19
5330-804-5695	112	22
5330-804-5695	112	29
5330-804-5695	112	30
5330-804-5695	112	33
5330-804-5695	112	35
5330-804-5695	112	38
5330-804-5695	112	42
5330-804-5695	112	44
5330-804-5695	112	48
5330-804-5695	112	86
5330-804-5695	115	
5330-804-5695	116	
5330-804-5695	117	50
5330-804-5695	117	58A
5330-804-5695	117	65
5330-804-5695	117	94
5330-804-5695	117	95D
5330-804-5695	119	
5330-804-5695	119	18
5330-804-5695	119	229
5330-804-5695	119	232
5330-804-5695	119	281
5330-804-5695	119	283
5330-804-5695	119	303
5330-804-5695	119	305
5330-804-5695	119	309
5330-804-5695	119	311
5330-804-5695	119	314
5330-804-5695	119	321
5330-804-5695	119	325
5330-804-5695	119	45
5330-804-5695	129	
5330-804-5695	129	109B
5330-804-5695	129	111A
5330-804-5695	129	44A
5330-804-5695	129	67B
5330-804-5695	129	68A
5330-804-5695	129	70A
5330-804-5695	129	70B
5330-804-5695	129	75A
5330-804-5695	129	85B
5330-804-5695	129	90A
5330-804-5695	134	50
5330-804-5695	139	111
5330-804-5695	139	16
5330-804-5695	139	23
5330-804-5695	139	4
5330-804-5695	139	41B
5330-804-5695	139	45
5330-804-5695	139	55A
5330-804-5695	139	57
5330-804-5695	139	72
5330-804-5695	139	91
5330-804-5695	139	99
5330-804-5695	143	
5330-804-5695	143	13
5330-804-5695	143	17
5330-804-5695	143	20
5330-804-5695	143	23
5330-804-5695	143	30
5330-804-5695	143	34
5330-804-5695	178	133
5330-804-5695	272	28
5330-804-5695	274	2
5330-804-5695 KITS	44	30
5330-805-2966	51	
5330-805-2966	57	16B
5330-805-2966	58	15B
5330-805-2966	63	92
5330-805-2966	72	24
5330-805-2966	72	55
5330-805-2966	73	14
5330-805-2966	93	17
5330-805-2966	QC1	106
5330-805-2966	QC1	116
5330-805-2966	QC1	50
5330-805-2966	109	
5330-805-2966	109	1
5330-805-2966	109	42
5330-805-2966	109	57A
5330-805-2966	109	58E
5330-805-2966	109	60A
5330-805-2966	110	
5330-805-2966	110	14
5330-805-2966	110	42
5330-805-2966	110	47
5330-805-2966	110	7
5330-805-2966	112	122
5330-805-2966	112	123
5330-805-2966	112	129
5330-805-2966	112	133
5330-805-2966	112	137
5330-805-2966	112	141
5330-805-2966	112	143
5330-805-2966	112	149
5330-805-2966	112	151
5330-805-2966	112	153
5330-805-2966	112	159
5330-805-2966	112	161
5330-805-2966	112	167
5330-805-2966	112	24
5330-805-2966	112	6
5330-805-2966	112	64
5330-805-2966	112	67
5330-805-2966	112	73
5330-805-2966	112	84
5330-805-2966	112	88
5330-805-2966	112	90
5330-805-2966	112	95
5330-805-2966	112	97
5330-805-2966	115	46
5330-805-2966	115	53
5330-805-2966	116	
5330-805-2966	117	
5330-805-2966	117	2A
5330-805-2966	117	2B
5330-805-2966	117	3B
5330-805-2966	117	4A
5330-805-2966	117	6A
5330-805-2966	117	65
5330-805-2966	117	71B
5330-805-2966	117	75A
5330-805-2966	117	83
5330-805-2966	117	95H
5330-805-2966	119	
5330-805-2966	119	100
5330-805-2966	119	109
5330-805-2966	119	121
5330-805-2966	119	133
5330-805-2966	119	141
5330-805-2966	119	148
5330-805-2966	119	16

STOCK NUMBER	FIGURE NUMBER	ITEM NUMBER
5330-805-2966	119	161
5330-805-2966	119	197
5330-805-2966	119	201
5330-805-2966	119	214
5330-805-2966	119	223
5330-805-2966	119	229
5330-805-2966	119	277
5330-805-2966	119	289
5330-805-2966	119	30
5330-805-2966	119	345
5330-805-2966	119	353
5330-805-2966	119	357
5330-805-2966	119	364
5330-805-2966	119	37
5330-805-2966	119	399
5330-805-2966	119	43
5330-805-2966	119	59
5330-805-2966	119	7
5330-805-2966	119	71
5330-805-2966	119	80
5330-805-2966	119	81
5330-805-2966	129	
5330-805-2966	129	138
5330-805-2966	129	141
5330-805-2966	129	150
5330-805-2966	129	25A
5330-805-2966	129	35B
5330-805-2966	129	52A
5330-805-2966	129	53
5330-805-2966	129	55A
5330-805-2966	129	7A
5330-805-2966	129	82A
5330-805-2966	129	83
5330-805-2966	129	84A
5330-805-2966	129	85A
5330-805-2966	129	9
5330-805-2966	129	90A
5330-805-2966	129	95B
5330-805-2966	129	95D
5330-805-2966	129	95G
5330-805-2966	134	82
5330-805-2966	139	113
5330-805-2966	139	118
5330-805-2966	139	2
5330-805-2966	139	37
5330-805-2966	139	61
5330-805-2966	139	85
5330-805-2966	139	86
5330-805-2966	143	28
5330-805-2966	146	8
5330-805-2966	178	4
5330-805-2966	178	6
5330-805-2966	178	8
5330-805-2966	217	
5330-805-2966	224	45
5330-805-2966	265	107
5330-805-2966	268	122
5330-805-2966	270	17A
5330-805-2966	KITS	
5330-805-2966	258A	11
5330-805-6478	129	109A
5330-805-6478	129	15A
5330-805-6478	129	18A
5330-805-6478	129	63A
5330-805-6478	129	78A
5330-805-6478	139	37
5330-805-6478	139	38
5330-805-6478	139	85
5330-805-6478	139	86
5330-805-8688	BULK	
5330-806-3246	81	45
5330-806-3246	82	15
5330-806-3246	83	21L
5330-806-3246	83	25
5330-806-3246	KITS	
5330-806-4171	76	150
5330-806-4171	89	9
5330-806-7772	140	5
5330-806-7772	141	17
5330-806-7772	KITS	
5330-807-9637	76	124
5330-807-9637	88	53
5330-808-0087	BULK	
5330-808-0794	51	21
5330-808-0794	53	5
5330-808-0794	57	16
5330-808-0794	57	18
5330-808-0794	58	15
5330-808-0794	58	17
5330-808-0794	QC1	101
5330-808-0794	QC1	82
5330-808-0794	108	5
5330-808-0794	109	
5330-808-0794	109	16
5330-808-0794	109	46
5330-808-0794	117	
5330-808-0794	117	69D
5330-808-0794	117	72A
5330-808-0794	117	73D
5330-808-0794	117	77B
5330-808-0794	117	79A
5330-808-0794	119	217
5330-808-0794	119	267
5330-808-0794	119	287
5330-808-0794	119	298
5330-808-0794	119	340
5330-808-0794	119	349
5330-808-0794	119	383
5330-808-0794	119	392
5330-808-0794	129	
5330-808-0794	129	1A
5330-808-0794	129	11
5330-808-0794	129	110A
5330-808-0794	129	115
5330-808-0794	129	118
5330-808-0794	129	120
5330-808-0794	129	133
5330-808-0794	129	14
5330-808-0794	129	147
5330-808-0794	129	39
5330-808-0794	129	48
5330-808-0794	129	71A
5330-808-0794	129	97
5330-808-0794	137	33
5330-808-0794	139	25
5330-808-0794	139	35
5330-808-0794	139	76
5330-808-0794	139	83
5330-808-0794	139	97
5330-808-0794	143	18
5330-808-0794	143	3
5330-808-0794	KITS	
5330-808-7612	63	101
5330-808-7612	102	53
5330-808-7612	103	46
5330-808-7612	134	4
5330-809-1040	220	
5330-809-1040	221	32
5330-809-1040	221	36
5330-809-1040	221	56
5330-809-1040	221	57
5330-809-1040	221	69

STOCK NUMBER	FIGURE NUMBER	ITEM NUMBER
5330-809-1040	KITS	
5330-809-4365	71	38A
5330-809-4365	71	89
5330-809-4365	76	103
5330-809-4365	81	135
5330-809-4365	81	52
5330-809-4365	83	164
5330-809-4365	83	296
5330-809-4365	83	57
5330-809-4365	88	19
5330-809-4365	89	101
5330-809-4365	89	21
5330-809-4365	KITS	
5330-810-9659	KITS	
5330-810-9659	KITS	
5330-811-3272	134	41
5330-811-3508	216	69
5330-811-6503	76	143C
5330-811-6503	76	162
5330-813-2806	47	7
5330-813-2806	73	27
5330-813-2806	73	32
5330-814-2372	142	1
5330-815-3509	71	18
5330-815-3509	KITS	
5330-815-8860	63	42
5330-815-8860	63	52
5330-815-8860	63	57
5330-815-9489	76	19
5330-815-9489	81	27
5330-815-9489	83	126
5330-815-9489	KITS	
5330-816-3546	72	87
5330-816-3546	74	20
5330-816-3546	140	9
5330-816-3546	KITS	
5330-818-4591	102	47
5330-818-4591	103	40
5330-818-4591	134	6
5330-819-4641	126	12
5330-819-4641	128	16
5330-819-5282	97	22
5330-819-5282	97	5
5330-819-5282	98	12
5330-821-1508	102	52
5330-821-1508	103	45
5330-821-4814	64A	55
5330-821-8848	126	12
5330-821-8848	128	16
5330-822-0991	BULK	
5330-825-1369	83	152
5330-825-1700	149	14
5330-825-1700	274	46
5330-826-9923	BULK	
5330-827-0332	88	47B
5330-828-0437	76	53
5330-828-0437	81	91
5330-829-7762	74	39
5330-833-1428	73	58
5330-833-1429	BULK	
5330-833-4210	123	12
5330-833-5468	149	84
5330-833-7491	53	43
5330-833-7491	54	11
5330-833-7491	178	6
5330-833-7491	KITS	
5330-833-7491	258A	2
5330-833-8165	149	10
5330-834-1477	89	8
5330-834-1488	18	
5330-834-1491	18	
5330-834-1496	18	
5330-834-1501	18	25
5330-834-1501	18	68
5330-834-1503	18	26
5330-834-1503	18	72
5330-834-6676	117	
5330-834-6676	129	
5330-835-2765	88	55
5330-835-2894	81	73
5330-835-2894	83	212
5330-835-7485	109	43
5330-835-7485	109	5
5330-835-7485	112	127
5330-835-7485	112	131
5330-835-7485	112	139
5330-835-7485	112	145
5330-835-7485	112	157
5330-835-7485	112	163
5330-835-7485	119	
5330-835-7485	139	
5330-835-7485	139	21
5330-835-7485	139	70
5330-835-7485	224	48
5330-835-8974	71	10
5330-835-8974	76	109C
5330-835-8974	76	28
5330-835-8974	76	32B
5330-835-8974	83	111
5330-835-8974	83	113
5330-835-8974	83	21J
5330-835-8974	88	10
5330-835-8974	88	6
5330-835-8974	88	8
5330-835-8974	88	96
5330-835-8974	89	11
5330-835-8974	89	13
5330-835-8974	89	15
5330-835-8974	95	105
5330-835-8974	95	48
5330-835-8974	95	55
5330-835-8974	95	58
5330-835-8974	95	77
5330-835-8974	95	80
5330-835-8974	95	92
5330-835-8974	95	97
5330-835-8974	QC1	179
5330-835-8974	KITS	
5330-836-2434	31	
5330-836-6092	53	18
5330-836-6092	54	36
5330-838-9773	130	9
5330-838-9773	132	38
5330-838-9773	136	18
5330-839-1846	67	15
5330-839-1846	120	20
5330-839-1846	127	13
5330-839-1846	128	35
5330-839-1846	146	5
5330-839-1846	153	3
5330-839-1846	224	38
5330-839-9233	247	11
5330-841-5540	154	
5330-841-5540	266	
5330-841-9959	65	8
5330-842-5505	59	16D
5330-842-5505	122	46
5330-842-5505	123	15
5330-842-5505	125	30
5330-842-5505	125	34
5330-842-5505	125	39
5330-842-5505	125	43

STOCK NUMBER	FIGURE NUMBER	ITEM NUMBER	STOCK NUMBER	FIGURE NUMBER	ITEM NUMBER
5330-842-5505	126	2	5330-877-7547	211	9A
5330-842-5505	127	7	5330-877-7547	218	10
5330-842-5505	128	19A	5330-877-7547	218	14
5330-842-5505	130	31	5330-877-7547	219	59
5330-842-5505	133	49	5330-877-7547	219	8
5330-842-5505	142	3	5330-877-9908	71	28
5330-842-5505	151	10	5330-877-9908	88	26
5330-842-6432	11A	107A	5330-877-9908	KITS	
5330-842-6464	11A	107D	5330-879-8898	167	17
5330-842-8342	102	46	5330-880-2601	75	130
5330-842-8342	103	39	5330-880-5818	212	7
5330-843-9726	121	21	5330-882-4963	73	31
5330-843-9726	124	34	5330-882-9118	183A	4
5330-843-9726	124	40	5330-882-9172	76	144D
5330-843-9726	124	54	5330-883-3810	67	24
5330-843-9726	127	10	5330-884-0079	67	56
5330-843-9726	137	31	5330-884-5320	76	33
5330-845-9685	126	11	5330-886-1429	43	6
5330-845-9685	128	15	5330-891-4683	71	19
5330-848-9128	124	21	5330-891-4683	71	21D
5330-851-1171	75	167	5330-891-4684	71	100
5330-853-6655	BULK		5330-891-4685	71	29A
5330-855-3430	BULK		5330-891-8433	71	33A
5330-855-6296	71	110	5330-892-1608	102	42
5330-855-6296	KITS		5330-892-1608	103	35
5330-855-6298	71	74	5330-892-2550	71	103
5330-855-6299	71	33	5330-892-2556	71	21F
5330-855-6299	KITS		5330-892-2563	183A	4
5330-860-0640	81	75A	5330-892-4263	71	19
5330-860-0641	81	60	5330-892-4263	83	184
5330-860-5609	83	17	5330-892-4263	KITS	
5330-860-5609	83	8	5330-894-1954	272	34
5330-860-5610	83	31	5330-895-9387	88	64
5330-860-5611	83	41	5330-895-9446	83	108
5330-860-5612	83	129	5330-895-9447	83	226
5330-860-5613	83	155	5330-895-9462	83	230
5330-860-5615	87	24	5330-897-3789	64	6
5330-860-9515	87	23	5330-898-0106	75	98
5330-862-9255	80	10	5330-898-4536	213	55
5330-862-9285	76	60A	5330-898-4536	220	
5330-862-9288	76	25	5330-898-9629	248	64
5330-862-9291	76	14	5330-899-4098	81	157
5330-863-1122	73	48	5330-899-4099	81	158
5330-863-1123	73	56	5330-901-5094	76	75
5330-863-1200	71	74	5330-901-5094	89	59
5330-863-1201	71	110	5330-901-7310	134	3
5330-864-3496	188	21	5330-901-8674	49	7
5330-864-7181	71	4	5330-902-0917	83	236
5330-864-7181	89	50	5330-902-0917	83	255
5330-864-7206	71	54	5330-905-3715	81	21
5330-864-7216	71	21F	5330-905-3715	83	301
5330-865-4454	149	15	5330-910-3478	88	23
5330-867-6656	140	14	5330-911-9426	16	43
5330-867-6656	141	12	5330-911-9426	19	7
5330-869-3649	73	35	5330-911-9426	28	28A
5330-871-7859	BULK		5330-913-0932	75	126
5330-872-4487	BULK		5330-913-0933	71	74
5330-877-7543	211	36	5330-913-0933	KITS	
5330-877-7543	211	52	5330-914-6069	137	36
5330-877-7543	218	5	5330-914-6069	137	43
5330-877-7543	218	55	5330-914-6815	137	23
5330-877-7543	219	3	5330-914-9905	BULK	
5330-877-7543	219	50	5330-916-2624	59	46
5330-877-7543	219	54	5330-917-7709	149	60
5330-877-7543	219	97	5330-920-7191	137	35
5330-877-7544	211	47	5330-920-7192	137	22A
5330-877-7544	218	40	5330-920-8096	76	144E
5330-877-7544	218	50	5330-922-5854	52	6
5330-877-7545	211	5	5330-922-5854	105	14
5330-877-7545	218	10	5330-923-4403	88	68
5330-877-7545	218	14	5330-923-4404	88	43

STOCK NUMBER	FIGURE NUMBER	ITEM NUMBER
5330-923-5991	55	1
5330-924-3902	83	300
5330-924-5803	149	93
5330-924-7759	76	69
5330-925-7074	149	32
5330-928-2016	134	73
5330-928-4588	178	105
5330-928-4588	275	
5330-928-9040	BULK	
5330-932-3874	129	18A
5330-932-3875	143	8
5330-932-5640	143	27
5330-933-1361	71	38A
5330-933-1361	71	89
5330-933-1361	KITS	
5330-933-1368	64	4
5330-933-1369	64	12
5330-933-1369	64	16
5330-934-0170	149	22
5330-935-2022	89	86
5330-935-2023	89	56
5330-935-2024	89	29
5330-935-6048	149	57
5330-935-6048	267	39
5330-935-9149	65	75
5330-935-9150	65	83
5330-935-9151	65	38
5330-935-9152	65	61
5330-936-4579	139	111
5330-936-4579	139	99
5330-936-8541	165	8
5330-936-9557	247	16
5330-936-9571	247	2
5330-937-1332	123	18
5330-937-1332	140	21
5330-937-1332	141	
5330-937-1332	142	10
5330-937-3426	16	45
5330-937-3426	19	5
5330-937-3426	28	30
5330-937-4106	134	17
5330-937-4106	134	28
5330-937-4106	134	36
5330-937-8856	50	1
5330-938-3241	165	7
5330-942-7564	140	12
5330-942-7570	102	50
5330-942-7570	103	43
5330-942-7571	102	58
5330-942-7571	103	51
5330-942-7572	102	54
5330-942-7572	103	47
5330-942-7573	102	12
5330-942-7573	103	14
5330-943-0900	149	
5330-943-0901	BULK	
5330-945-3945	266	
5330-948-3224	149	82
5330-949-5494	49	9
5330-949-5494	KITS	
5330-950-9715	76	125
5330-951-3150	216	39
5330-951-3150	218	24
5330-953-8978	79	21
5330-954-1285	71	29
5330-954-1285	KITS	
5330-954-1286	76	143
5330-954-2738	81	13
5330-954-2738	81	14A
5330-954-2739	76	88
5330-954-2739	81	44
5330-954-2739	83	24
5330-954-2739	KITS	
5330-954-2740	76	62
5330-954-2740	76	73A
5330-954-2740	KITS	
5330-954-6684	49	48
5330-954-6684	49	57
5330-957-1490	79	10
5330-958-8572	197A	14
5330-959-6261	BULK	
5330-960-0001	QC1	53
5330-960-0001	217	6
5330-960-0001	217A	8
5330-960-0001	217B	11
5330-964-2553	83	11
5330-964-2553	83	130
5330-964-2553	83	20
5330-964-2553	83	42
5330-964-2553	KITS	
5330-964-3365	138	2
5330-969-5574	81	13A
5330-969-5574	83	18
5330-969-5574	83	9
5330-975-8124	272	48
5330-975-8124	272	53
5330-978-2231	118	108
5330-978-2232	118	108
5330-979-7613	253	14
5330-980-5093	149	43
5330-984-5664	147	2
5330-984-5666	228	
5330-984-5667	147	3
5330-988-8808	76	182
5330-988-8808	81	11A
5330-988-8808	KITS	
5330-993-1466	81	131
5330-993-1466	83	266
5330-993-1466	83	294
5330-993-7665	196	
5330-994-3283	81	19
5330-995-6449	79	5
5330-995-7998	79	18
5330-995-7998	79	4
5330-999-1582	102	21
5330-999-1582	103	19
5330-999-4077	75	130
5330-999-4077	75	174
5335-856-6681	32	32
5335-856-6682	32	47
5335-865-8300	251	6
5335-883-4459	102	25
5335-883-4459	103	22A
5335-883-4460	102	18
5335-883-4460	103	17C
5335-928-6305	32	32
5335-966-9380	32	50
5340-010-3090	BULK	
5340-012-2326	10	
5340-012-2331	10	
5340-012-2331	11A	
5340-012-2331	11A	58A
5340-012-2331	11A	75A
5340-013-3806	65	30
5340-016-7601		97
5340-016-7601	87	4
5340-020-5739	62	35
5340-020-5739	QC1	10

STOCK NUMBER	FIGURE NUMBER	ITEM NUMBER
5340-021-5583	65	32
5340-026-4412	68	60
5340-038-0417	68	54
5340-038-0417	68	56
5340-038-0417	183A	56
5340-042-5910	66	22
5340-043-0287	64A	23
5340-043-3723	BULK	
5340-043-3724	BULK	
5340-051-1410	BULK	
5340-054-3633	265	54
5340-055-7646		
5340-057-8304	10	22
5340-059-8708	157	16
5340-059-8708	158	17
5340-063-5446	83	
5340-063-5446	BULK	
5340-064-9199	33	
5340-064-9200	33	
5340-066-1393	203	17
5340-067-6322	BULK	
5340-067-9874	22	
5340-067-9875	22	
5340-067-9886	34	40
5340-067-9887	34	40
5340-068-0532	207	
5340-068-0532	207	17
5340-068-0532	208	21
5340-068-4378	BULK	
5340-070-1169	75	42
5340-072-3593	74	80
5340-072-3736	74	78
5340-072-3751	74	81
5340-072-3756	74	81
5340-073-3354	QC1	9
5340-073-3354	249	16
5340-074-2002	102	55
5340-074-2617	74	82
5340-075-5991	74	84
5340-079-8900	33	14
5340-079-8901	33	13
5340-081-4538	81	191
5340-089-2416	76	117
5340-089-2416	76	218
5340-089-3016	88	41
5340-097-7292	18	
5340-103-2401	205	5
5340-103-9508	428	20
5340-104-7582	218	73D
5340-104-7582	218	73E
5340-104-7582	218	75A
5340-104-7582	BULK	
5340-104-7582	219A	178
5340-104-7582	219A	73
5340-104-7582	219A	83
5340-112-0606	28	
5340-119-4081	31	
5340-131-6419	21	97A
5340-131-6419	21	97F
5340-132-6927	216	42
5340-133-1974	BULK	
5340-134-3312	118	62
5340-134-3345	80	22
5340-134-3345	81	66
5340-134-3345	83	306
5340-134-3345	89	38
5340-134-3345	89	65
5340-134-3346	81	208
5340-134-3347	81	106
5340-134-3347	88	33
5340-134-3347	88	51
5340-134-3348	80	22A
5340-134-3348	81	108
5340-134-3348	83	
5340-134-3348	83	209
5340-134-3348	83	264
5340-134-3369	189A	34
5340-134-3370	189A	13
5340-134-3791	13	20
5340-134-3791	13	45
5340-134-3791	13	71
5340-134-4043	228	23A
5340-134-4068	BULK	
5340-134-4069	BULK	
5340-143-0073	F19	4
5340-144-6208	189	39
5340-144-6694	62	41
5340-151-5894	182A	19A
5340-151-7046	378	24
5340-151-7047	378	31
5340-151-7489	368	10
5340-151-7653	68	61
5340-152-0122	68	63
5340-152-0126	68	59
5340-152-0497	183A	27
5340-152-0659	68	62
5340-152-0685	68	15
5340-157-7456	183A	81C
5340-165-7696	21	
5340-165-7697	21	
5340-168-6599	18	91F
5340-168-6599	18	98F
5340-168-6599	275	14F
5340-168-6612	11A	18
5340-176-0373	32	67
5340-176-0418	284	28
5340-176-0418	285	26
5340-176-0419	284	29
5340-176-0419	285	27
5340-176-0420	284	25
5340-176-0420	285	25
5340-176-0421	284	33
5340-176-0421	285	34
5340-176-0422	284	26
5340-176-0422	285	28
5340-176-0435	287	15
5340-176-0600	21	97G
5340-176-0867	42A	32
5340-176-0867	42C	33
5340-176-0902	75	25
5340-176-0903	75	40

STOCK NUMBER	FIGURE NUMBER	ITEM NUMBER
5340-176-0906	75	29
5340-177-3742	268	153
5340-177-4144	284	24
5340-177-4144	285	24
5340-178-6067	42B	80
5340-178-6091	89	124A
5340-181-1359	BULK	
5340-186-3390	119	
5340-186-3390	KITS	
5340-189-6676	204A	141
5340-193-0105	KITS	
5340-193-0116	119	
5340-193-0117	BULK	
5340-193-0123	119	
5340-193-0123	213	
5340-193-0123	220	
5340-193-0123	221	114
5340-193-0123	221	138
5340-193-0123	KITS	
5340-193-0138	109	
5340-193-0138	112	28
5340-193-0138	112	69
5340-193-0138	112	91
5340-193-0138	119	
5340-193-0138	213	
5340-193-0138	220	
5340-193-0138	221	40
5340-193-0138	257	22A
5340-193-0138	257	9C
5340-193-0138	KITS	
5340-194-4265	119	
5340-194-4265	213	
5340-194-4265	218	62C
5340-194-4265	218	64B
5340-194-4265	218	68C
5340-194-4265	218	69C
5340-194-4265	219	
5340-194-4265	220	10
5340-194-4265	221	102
5340-194-4265	221	21
5340-194-4265	221	23
5340-194-4265	221	55
5340-194-4265	221	68
5340-194-4265	221	72
5340-194-4265	221	75
5340-194-4265	KITS	
5340-194-4265	219A	183
5340-194-4265	219A	79
5340-200-7224	BULK	
5340-200-7451	BULK	
5340-202-1085	74	82
5340-205-5244	198	16
5340-205-5244	198	17
5340-205-5244	198	18
5340-205-5244	201	
5340-205-5244	209	12
5340-205-6965	165	1
5340-226-4960	36	
5340-226-4960	36	
5340-226-4964	31	24
5340-226-4964	KITS	
5340-229-7677	112	28
5340-229-7677	112	32
5340-229-7677	112	41
5340-229-7677	112	45
5340-229-7677	213	
5340-229-7677	219	
5340-229-7677	220	
5340-229-7677	220	38
5340-229-7677	221	10
5340-229-7677	221	13
5340-229-7677	221	18
5340-229-7677	221	21
5340-229-7677	221	23
5340-229-7677	221	78
5340-229-7677	221	83
5340-229-7677	KITS	
5340-229-7677	219A	78
5340-252-6106	150A	27
5340-256-6327	183A	58
5340-257-1143	67A	48
5340-257-3765	25	
5340-285-7010	81	6
5340-285-7010	KITS	
5340-285-7918	BULK	
5340-286-2139	125	23
5340-286-6600	BULK	
5340-286-9421	BULK	
5340-286-9424	BULK	
5340-290-0808	BULK	
5340-290-4476	134	77
5340-290-4476	203	28A
5340-290-4480	134	75
5340-290-4497	67	36
5340-290-4497	134	46
5340-290-4532	BULK	
5340-291-3484	125	
5340-291-5322	BULK	
5340-291-5353	BULK	
5340-292-3296	57	16A
5340-292-3296	58	15A
		161
5340-311-2827	160	47
5340-311-2849	160	71
5340-329-1676	BULK	
5340-335-0032	36	30
5340-345-5022	BULK	
5340-369-4056	65	85
5340-388-9191	160	48
5340-400-3531	63	14
5340-400-5519	65	64
5340-403-7032	37A	87
5340-404-3353	11	4A
5340-411-4090	37A	67
5340-433-3269	BULK	
5340-434-5815	150A	7
5340-436-5021	72	99
5340-436-5021	74	10
5340-443-1159	118	
5340-448-4250	42B	
5340-454-0387	BULK	
5340-464-7099	21	22
5340-465-8794	149	11
5340-465-8794	274	43
5340-477-3990	218	74B

STOCK NUMBER	FIGURE NUMBER	ITEM NUMBER	STOCK NUMBER	FIGURE NUMBER	ITEM NUMBER
5340-477-3991	218	74B	5340-533-3653	QC1	
5340-477-6752	268	107	5340-533-3653	143	
5340-491-0729	11A	11	5340-533-3653	211	
5340-491-0729	11A	6	5340-533-3653	218	62A
5340-491-0729	11A	9	5340-533-3653	218	68A
5340-491-0736	287	16	5340-533-3653	218	69A
5340-514-1323	188	61	5340-533-3653	219	
5340-514-1339	QC1		5340-533-3653	249	20C
5340-514-1339	213		5340-533-3653	KITS	
5340-514-1339	220		5340-533-3653	217A	13
5340-522-4881	15		5340-533-3653	217B	16
5340-522-4883	15		5340-533-3654	BULK	
			5340-533-3654	217A	22
5340-533-3505	210	92	5340-533-3654	217A	23
5340-533-3505	270	8	5340-533-5342	81	8B
5340-533-3510	62	82	5340-534-0296	21	
5340-533-3510	QC1		5340-535-9568	207	
5340-533-3510	KITS				
5340-533-3511	QC1				
5340-533-3511	BULK				
5340-533-3511	KITS		5340-543-3936	110	36A
5340-533-3512	QC1		5340-548-7123	QC1	
5340-533-3512	BULK		5340-548-7123	BULK	
5340-533-3512	KITS		5340-548-7340	BULK	
5340-533-3512	217B	2	5340-548-7707	BULK	
5340-533-3512	217B	27	5340-548-7812	BULK	
5340-533-3512	217B	28	5340-550-5036	BULK	
5340-533-3512	217B	3	5340-558-3003	BULK	
5340-533-3513	QC1				
5340-533-3513	143		5340-558-3617	167	41
5340-533-3513	217		5340-558-3617	201	59
5340-533-3513	219		5340-558-3617	KITS	
5340-533-3513	KITS		5340-562-7870	230	72
5340-533-3513	219A	82	5340-562-7870	231	96
5340-533-3513	219A	91	5340-566-5272	31	12
5340-533-3514	QC1		5340-573-0780	BULK	
5340-533-3514	143		5340-573-2944	81	119
5340-533-3515	QC1		5340-573-5800	BULK	
5340-533-3515	117		5340-574-6018	BULK	
5340-533-3515	143		5340-576-2345	BULK	
5340-533-3515	KITS		5340-579-6359	157	4
5340-533-3515	217A	23	5340-579-6359	158	4
5340-533-3515	217B	17	5340-579-6359	KITS	
5340-533-3515	217B	24	5340-579-6888	219A	87
5340-533-3515	217B	27			
5340-533-3516	QC1				
5340-533-3516	143				
5340-533-3516	217A	13			
5340-533-3517	42				
5340-533-3517	QC1				
5340-533-3517	143		5340-582-3721	BULK	
5340-533-3517	217		5340-582-7256	149	35
5340-533-3517	KITS		5340-582-7256	274	32
5340-533-3517	217B	5	5340-584-1838	265	277
5340-533-3517	217B	6	5340-584-1838	268	236
5340-533-3558	QC1				
5340-533-3558	143				
5340-533-3558	217				
5340-533-3558	217A	5			
5340-533-3600	QC1		5340-587-4173	245	24
5340-533-3600	143				
5340-533-3600	217		5340-596-5552	11	84B
5340-533-3600	217A	5	5340-596-5552	11	96
5340-533-3600	217A	6	5340-597-3302	134	47
5340-533-3600	217A	7	5340-597-3302	214	21
5340-533-3600	217B	10	5340-597-3302	216	20
5340-533-3600	217B	5	5340-597-6580	186	13
5340-533-3600	217B	9	5340-597-9388	218	73C
5340-533-3611	BULK		5340-598-0158	217A	14
5340-533-3642	QC1		5340-598-0158	217A	15
5340-533-3642	BULK		5340-598-0158	217B	17

STOCK NUMBER	FIGURE NUMBER	ITEM NUMBER
5340-598-2806	33	32
5340-598-4136	95	49
5340-598-4136	95	52
5340-598-4136	95	65
5340-598-4136	95	71
5340-598-4136	95	82
5340-598-4136	95	89
5340-598-4136	95	90
5340-598-4136	95	91
5340-598-4176	BULK	
5340-598-4176	219A	94
5340-598-8251	62	
5340-598-8251	QC1	
5340-598-8251	129	
5340-598-8251	217	
5340-604-1078	265	177
5340-604-1078	268	149
5340-605-5416	BULK	
5340-616-4796	260	1
5340-619-0695	BULK	
5340-619-7031	22	
5340-619-7488	95	13
5340-621-7377	30	18
5340-621-8318	222	
5340-621-8318	244	
5340-621-8318	KITS	
5340-623-7178	217B	23
5340-623-7178	217B	24
5340-623-7178	217B	28
5340-623-7178	217B	6
5340-632-0454	21	64
5340-632-2052	119	
5340-647-3445	24	
5340-652-0385	71	15
5340-652-0385	71	27C
5340-655-7853	BULK	
5340-660-3406	83	21H
5340-664-0399	BULK	
5340-664-4157	128	43
5340-664-4541	25	
5340-664-8118	BULK	
5340-664-8138	BULK	
5340-664-8141	BULK	
5340-664-8153	BULK	
5340-664-8163	BULK	
5340-664-8177	BULK	
5340-664-9056	BULK	
5340-671-9450	BULK	
5340-673-6164	BULK	
5340-678-8590	265	190
5340-678-8590	268	227
5340-680-9038	219A	186
5340-680-9038	219A	86
5340-682-4845	265	267
5340-682-4845	268	172C
5340-684-9501	134	76
5340-684-9501	149	20
5340-684-9501	274	51
5340-685-0507	95	24A
5340-686-1234	216	8A
5340-686-1235	216	61
5340-687-6954	28	24V
5340-687-6954	88	91
5340-687-6954	89	128
5340-687-6954	KITS	
5340-689-7125	216	61
5340-696-6036	216	15
5340-702-0566	KITS	
5340-702-4855	BULK	
5340-702-4860	263	15
5340-716-4661	72	82
5340-716-4661	74	26
5340-718-6520	QC1	167
5340-718-6520	259	15A
5340-718-6521	QC1	166
5340-718-6521	259	14
5340-718-6610	QC1	163
5340-718-6610	259	10A
5340-721-7383	KITS	
5340-721-7498	63	63
5340-721-7498	138	25
5340-721-7498	138	26
5340-721-7498	149	34
5340-721-7498	274	33
5340-721-7653	51	
5340-721-7653	63	4
5340-721-7653	63	62
5340-721-7653	63	85
5340-721-7653	267	24
5340-721-8182	42	
5340-722-4626	67	23
5340-723-2755	182	
5340-725-3753	33	17
5340-726-3009	BULK	
5340-726-9323	BULK	
5340-727-1095	83	
5340-727-1095	BULK	
5340-727-1891	BULK	
5340-727-4744	272	14
5340-731-7418	76	67
5340-731-7419	76	71
5340-731-9503	212	19
5340-738-6826	21	138
5340-753-2413	212	19
5340-753-2428	212	19
5340-753-5298	87	21
5340-753-5305	80	22
5340-753-5306	83	180
5340-754-7453	88	48A
5340-755-6703	79	44
5340-755-6703	96	26
5340-755-6704	79	48
5340-755-6704	96	28
5340-755-7283	40	
5340-755-7334	102	37A
5340-755-7334	102	37E
5340-757-2922	128	28
5340-757-2923	128	28
5340-757-4049	83	
5340-757-4050	83	
5340-757-7200	18	118
5340-757-7201	18	117
5340-757-7202	18	116

STOCK NUMBER	FIGURE NUMBER	ITEM NUMBER
5340-759-2893	94	1
5340-759-2893	94	5
5340-759-5511	18	
5340-759-5511	18	100
5340-759-5511	18	94
5340-759-5511	18	96
5340-759-5511	32	11
5340-764-7093	BULK	
5340-764-7094	83	
5340-764-7094	BULK	
5340-764-9831	182A	22
5340-766-6001	117	
5340-766-6001	129	
5340-770-9180	BULK	
5340-771-0045	87	21
5340-771-0045	124	
5340-771-7198	A32	3
5340-775-1809	BULK	
5340-776-8139	BULK	
5340-777-6728	102	37A
5340-777-6728	103	
5340-777-6728	124	
5340-779-5739	63	23
5340-781-1454	212	19
5340-781-8061	BULK	
5340-782-8737	192	47
5340-783-9752	BULK	
5340-787-2067	244	
5340-787-6923	83	
5340-788-5729	36	
5340-788-5731	36	
5340-788-5732	11A	105C
5340-788-8385	223	152
5340-792-8292	62	7F
5340-793-0860	34	41
5340-799-1154	21	97B
5340-799-1154	21	97E
5340-800-7874	59	47
5340-800-7874	63	5
5340-800-7874	183	28
5340-800-7874	265	279
5340-800-7874	268	242
5340-801-1169	260	2
5340-801-1171	262	59
5340-801-4629	221	18A
5340-801-4629	221	20A
5340-801-4629	BULK	
5340-801-4631	BULK	
5340-802-3999	BULK	
5340-807-1070	BULK	
5340-807-1791	11	73
5340-808-4042	BULK	
5340-809-1087	BULK	
5340-809-4389	240	
5340-809-9379	119	
5340-810-6617	BULK	
5340-811-9439	11	36D
5340-813-8062	BULK	
5340-814-0267	265	268
5340-814-0267	265	97
5340-814-0267	268	12A
5340-814-0267	268	172D
5340-814-1712	BULK	
5340-815-0890	83	
5340-815-0890	BULK	
5340-815-7137	226	28
5340-817-0912	BULK	
5340-817-0918	212	35
5340-817-2398	BULK	
5340-817-8688	BULK	
5340-819-7874	BULK	
5340-820-0637	BULK	
5340-820-4382	275	
5340-821-5866	BULK	
5340-823-5072	34	
5340-824-1355	192	93
5340-824-1355	67A	54
5340-826-5693	BULK	
5340-828-0318	QC1	6
5340-828-0318	249	21
5340-828-0318	249	31
5340-828-8082	13	67B
5340-828-8086	18	
5340-828-8087	18	
5340-829-2141	212	30
5340-829-4541	QC1	
5340-829-4541	QC1	157
5340-829-4541	QC1	161
5340-829-4541	259	12
5340-829-4541	259	6
5340-829-4541	259	9
5340-829-8003	28	24B
5340-829-8003	BULK	
5340-832-4515	11B	115A
5340-832-4996	286	7
5340-832-4997	287	17
5340-832-4998	284	13
5340-832-4998	285	14
5340-832-4998	285	55
5340-832-4998	286	27
5340-832-4998	287	9
5340-833-1608	18	39
5340-833-1608	18	88
5340-833-7039	BULK	
5340-834-1474	18	60
5340-834-1476	18	60
5340-834-1478	18	109
5340-834-1480	18	109
5340-834-8427	BULK	
5340-835-1783	BULK	
5340-836-2433	20	50
5340-837-4207	18	16
5340-837-4211	18	9
5340-837-6558	BULK	
5340-838-2787	BULK	
5340-838-3060	129	1
5340-838-3060	129	97
5340-839-0748	224	35
5340-840-3894	11	133D
5340-841-5640	212	34
5340-842-1283	21	
5340-842-5920	128	45
5340-843-0003	265	95

STOCK NUMBER	FIGURE NUMBER	ITEM NUMBER
5340-843-0003	268	33
5340-843-0003	64A	72
5340-849-4633	45	
5340-849-6375	83	
5340-849-6375	BULK	
5340-855-1922	34	
5340-855-1922	34	62
5340-856-4423	18	
5340-856-4423	18	21
5340-856-4424	18	10
5340-856-4426	10	23
5340-856-6609	34	63
5340-856-6680	15	25
		4
5340-857-3297	18	
5340-857-4921	265	235
5340-857-4921	265	28
5340-857-4921	268	72
5340-859-5337	BULK	
5340-862-7670	40	
5340-863-3861	44	118
5340-864-4958	45	
5340-864-4959	265	96
5340-864-4959	268	48
5340-864-4959	268	51
5340-865-0219	204A	4
5340-865-9817	83	210
5340-866-6108	32	37A
5340-867-1234	63	13
5340-868-5862	81	95A
5340-868-7173	272	23
5340-868-7173	272	56
5340-871-4234	BULK	
5340-872-4491	49	57A
5340-872-4494	49	3
5340-872-4495	47	4
5340-872-6135	49	21B
5340-873-2286	10	21
5340-873-2302	18	142
5340-873-2302	18	150
5340-873-2302	18	8
5340-873-2303	18	143
5340-873-2303	18	15
5340-873-2303	18	152
5340-873-8029	223	248
5340-874-2921	18	
5340-874-2938	67A	39
5340-874-7391	11B	
5340-875-1453	24	19
5340-879-0910	13	67B
5340-881-0020	BULK	
5340-881-3775	25	15
5340-882-1428	20	
5340-882-1428	240	
5340-885-8675	17	27A
5340-885-8676	17	17A
5340-885-8677	17	15A
5340-885-8726	18	141
5340-886-3354	18	169
5340-886-3354	18	173
5340-886-3354	32	
5340-886-3735	197	13
5340-886-6664	11B	
5340-886-6665	11B	
5340-887-1522	18	54
5340-888-7399	25	13
5340-890-7770	222	200
5340-890-7770	222	79A
5340-890-7770	244	
5340-890-7770	248	61
5340-890-7770	KITS	
5340-891-1458	78	46
5340-891-1460	78	45
5340-893-6012	182A	23
5340-893-6022	182A	20
5340-893-6728	28	24P
5340-893-6728	KITS	
5340-894-0668	BULK	
5340-898-9242	11A	19
5340-898-9248	11A	19
5340-898-9249	11A	19
5340-898-9633	248	16
5340-898-9637	BULK	
5340-898-9643	BULK	
5340-900-2392	92	17
5340-900-2392	92	75
5340-900-3052	45	
5340-900-5614	49	2
5340-901-3888	33	17
5340-902-4178	21	13
5340-902-4178	21	8
5340-902-4178	BULK	
5340-903-8203	F20	17
5340-903-8204	F19	4
5340-903-8205	F17	1A
5340-903-8207	F18	20B
5340-903-8209	F18	20A
5340-903-8210	F20	30
5340-903-8216	117	3A
5340-903-8216	119	
5340-903-8217	115	43
5340-903-8218	115	42
5340-904-1666	36	
5340-904-1666	36	2
5340-904-4625	10	
5340-904-6629	KITS	
5340-904-6630	BULK	
5340-904-6630	KITS	
5340-904-6631	BULK	

STOCK NUMBER	FIGURE NUMBER	ITEM NUMBER
5340-904-6631	KITS	
5340-904-6632	BULK	
5340-904-6632	KITS	
5340-904-6633	BULK	
5340-904-6633	KITS	
5340-904-6634	BULK	
5340-904-6634	KITS	
5340-904-6635	BULK	
5340-904-6635	KITS	
5340-906-8054	45	24
5340-909-2556	13	40C
5340-909-2557	13	40B
5340-909-2558	13	40C
5340-910-2674	17	27A
5340-911-2708	15	46
5340-911-2709	15	47
5340-911-6851	37	
5340-911-9451	32	
5340-911-9451	32	4
5340-913-2354	268	178
5340-913-3408	71	145
5340-914-0521	BULK	
5340-914-0522	BULK	
5340-914-4134	80	14
5340-914-4134	80	5
5340-914-4134	81	210
5340-914-4134	83	141
5340-914-4135	76	142
5340-914-4135	76	142D
5340-914-4135	83	173
5340-914-4135	92	27B
5340-914-4135	92	81B
5340-914-4137	80	12
5340-914-4137	81	212
5340-914-4139	76	46
5340-914-4140	88	29
5340-914-4141	76	44
5340-914-5745	BULK	
5340-914-5748	BULK	
5340-914-6073	81	121B
5340-914-8975	244	129
5340-914-9888	83	172
5340-914-9888	83	353
5340-916-2439	BULK	
5340-917-2157	240	33
5340-917-2163	240	34
5340-919-8909	11C	13C
5340-920-8415	281	
5340-920-8415	282	10
5340-921-0654	26	
5340-921-0662	24	
5340-921-0666	62	6
5340-921-5734	A32	5
5340-923-4425	71	65
5340-924-9647	15	
5340-927-9543	224	28
5340-927-9549	239	33
5340-927-9549	239	67
5340-928-9022	BULK	
5340-929-8512	239	23
5340-934-8472	186	8
5340-934-8487	102	37C
5340-934-8487	102	37G
5340-934-8487	224	46
5340-936-6134	31	
5340-937-1719	16	32
5340-937-1722	34	31
5340-938-4017	119	
5340-938-4073	192	85
5340-938-6668	139	54
5340-941-8340	140	15
5340-943-0743	196	48
5340-945-5770	11A	10
5340-946-4870	223	247
5340-947-3246	76	71
5340-947-6256	76	67
5340-947-9891	BULK	
5340-948-9787	62	
5340-948-9787	118	99
5340-948-9787	KITS	
5340-948-9834	BULK	
5340-949-5496	33	11
5340-949-5497	33	13
5340-949-5498	33	12
5340-949-5499	33	14
5340-949-8274	BULK	
5340-950-2707	223	142
5340-952-2952	10	19
5340-952-7389	149	79
5340-952-7445	223	58
5340-952-7446	244	107
5340-952-7446	244	118
5340-952-7481	BULK	
5340-952-7484	228	167
5340-952-7485	239	127
5340-952-7497	222	134
5340-952-7497	237	15
5340-952-7498	238	52
5340-952-7499	BULK	
5340-952-7500	BULK	
5340-952-7550	239	47
5340-952-7550	239	81
5340-952-7557	243	12
5340-952-7565	243	26
5340-953-0249	76	65A
5340-954-6826	62	

STOCK NUMBER	FIGURE NUMBER	ITEM NUMBER
5340-954-6826	95	163
5340-954-6826	119	
5340-954-6826	129	
5340-954-6826	139	
5340-954-6826	139	100
5340-954-6826	182	
5340-954-6826	226	23
5340-954-6826	269	1A
5340-954-6826	270	61B
5340-954-6826	277	
5340-954-6826	KITS	
5340-955-6226	49	26B
5340-955-6226	57	22
5340-955-6226	73	28B
5340-955-6226	124	
5340-955-9670	71	124
5340-956-2959	18	48
5340-956-2961	18	41
5340-956-2962	18	41
5340-957-1488	95	65
5340-957-1488	95	71
5340-957-1488	95	75
5340-957-6280	71	42A
5340-957-7653	83	360
5340-957-7653	88	94
5340-957-7654	80	22A
5340-957-7654	81	108
5340-957-7654	83	209
5340-957-7654	83	264
5340-957-7654	83	364
5340-957-7658	76	47
5340-957-7658	80	22
5340-957-7658	81	173A
5340-957-7658	81	66
5340-957-7658	83	306
5340-957-7658	89	124B
5340-957-7658	89	38
5340-957-7658	89	65
5340-957-7658	89	83A
5340-957-7659	81	208
5340-957-7661	81	106
5340-957-7661	83	181
5340-957-7661	88	33
5340-957-7661	88	51
5340-961-4435	33	7
5340-961-4436	33	8
5340-961-4437	33	6
5340-961-4438	33	5
5340-961-8523	67A	8
5340-966-2393	11B	68
5340-966-3785	BULK	
5340-966-3785	219A	38
5340-966-4366	18	
5340-966-4366	18	163
5340-966-4366	18	77
5340-966-4366	32	
5340-966-4366	11B	
5340-970-4509	BULK	
5340-973-1933	11B	
5340-973-6933	49	21A
5340-973-6933	BULK	
5340-978-2244	18	117
5340-978-2245	18	116
5340-978-2246	18	130
5340-978-2247	18	129
5340-978-2248	11B	
5340-978-2249	11B	
5340-980-9598	32	
5340-981-3138	15	10C
5340-983-2540	261	4
5340-984-5569	BULK	
5340-984-5707	224	26
5340-984-5707	224	31
5340-985-6633	192	
5340-986-1166	188	
5340-986-9445	272	57
5340-988-0243	18	50
5340-988-6032	BULK	
5340-989-4319	11A	81
5340-989-4319	271	14
5340-989-4569	112	4
5340-989-4569	112	5
5340-989-4569	119	
5340-989-4569	139	
5340-989-4569	213	
5340-989-4570	95	49
5340-989-4571	112	20
5340-989-4571	207	
5340-989-4571	208	11
5340-989-4571	217	
5340-989-4571	KITS	
5340-989-4572	62	
5340-989-4572	95	100
5340-989-4572	95	104
5340-989-4572	95	107
5340-989-4572	95	108
5340-989-4572	95	110
5340-989-4572	95	52
5340-989-4572	95	83
5340-989-4572	95	85
5340-989-4572	95	86
5340-989-4572	95	87
5340-989-4572	95	88
5340-989-4572	95	89
5340-989-4572	95	90
5340-989-4572	95	96
5340-989-4572	95	99
5340-989-4572	129	
5340-989-4573	62	
5340-989-4573	129	
5340-989-4573	182	
5340-989-4573	220	
5340-989-4573	220	17
5340-989-4573	220	20
5340-989-4573	220	23
5340-989-4573	221	101
5340-989-4573	221	42
5340-989-4573	221	43
5340-989-4573	221	47
5340-989-4573	221	48
5340-989-4573	221	51
5340-989-4573	221	54
5340-989-4573	258	7D
5340-989-4573	277	
5340-989-4573	KITS	
5340-989-4574	129	
5340-989-4575	BULK	
5340-989-4575	KITS	
5340-989-4576	182	
5340-989-4576	277	
5340-989-4576	KITS	
5340-989-4577	BULK	
5340-989-4578	BULK	
5340-989-4581	109	
5340-989-4581	139	

STOCK NUMBER	FIGURE NUMBER	ITEM NUMBER
5340-989-4581	277	
5340-989-4581	KITS	
5340-989-7625	BULK	
5340-989-7626	BULK	
5340-990-3145	45	
5340-990-9297	234	29
5340-990-9297	256	19B
5340-990-9297	256	24
5340-990-9297	270	61B
5340-990-9298	109	
5340-990-9298	119	
5340-990-9298	265	212
5340-990-9298	268	158C
5340-990-9298	275	30
5340-990-9299	62	
5340-990-9299	95	158
5340-990-9299	95	161
5340-990-9299	109	
5340-990-9299	110	36A
5340-990-9299	110	37A
5340-990-9299	110	40A
5340-990-9299	110	46A
5340-990-9299	110	54
5340-990-9299	110	57
5340-990-9299	110	58
5340-990-9299	110	66
5340-990-9299	110	67
5340-990-9299	110	71
5340-990-9299	110	74
5340-990-9299	110	76
5340-990-9299	110	87
5340-990-9299	110	89
5340-990-9299	110	90
5340-990-9299	110	94
5340-990-9299	110	95
5340-990-9299	110	96
5340-990-9299	110	97
5340-990-9299	110	98
5340-990-9299	110	99
5340-990-9299	112	105
5340-990-9299	112	106
5340-990-9299	112	108
5340-990-9299	112	109
5340-990-9299	112	110
5340-990-9299	112	113
5340-990-9299	112	116
5340-990-9299	112	26
5340-990-9299	112	27
5340-990-9299	115	
5340-990-9299	116	
5340-990-9299	116	28B
5340-990-9299	117	
5340-990-9299	119	
5340-990-9299	129	
5340-990-9299	139	
5340-990-9299	139	115
5340-990-9299	139	116
5340-990-9299	178	113
5340-990-9299	178	72
5340-990-9299	179	33
5340-990-9299	206	10
5340-990-9299	206	7
5340-990-9299	206	9
5340-990-9299	221	18A
5340-990-9299	221	20A
5340-990-9299	221	84
5340-990-9299	256	23
5340-990-9299	257	9D
5340-990-9299	37A	12
5340-990-9299	37A	23
5340-990-9299	KITS	
5340-990-9300	42	
5340-990-9300	109	
5340-990-9300	110	63
5340-990-9300	110	74
5340-990-9300	110	75
5340-990-9300	110	76
5340-990-9300	110	77
5340-990-9300	112	17
5340-990-9300	112	37
5340-990-9300	112	53
5340-990-9300	112	57
5340-990-9300	112	61
5340-990-9300	112	63
5340-990-9300	112	9
5340-990-9300	115	
5340-990-9300	116	
5340-990-9300	117	
5340-990-9300	119	
5340-990-9300	129	
5340-990-9300	139	
5340-990-9300	139	102
5340-990-9300	139	104
5340-990-9300	139	107
5340-990-9300	139	110
5340-990-9300	139	114
5340-990-9300	178	114
5340-990-9300	178	140
5340-990-9300	206	6
5340-990-9300	206	7
5340-990-9300	206	8
5340-990-9300	206	9
5340-990-9300	213	
5340-990-9300	220	37
5340-990-9300	220	42
5340-990-9300	221	14
5340-990-9300	221	15
5340-990-9300	221	18A
5340-990-9300	221	20A
5340-990-9300	221	24
5340-990-9300	221	65
5340-990-9300	221	8
5340-990-9300	257	9E
5340-990-9300	265	187
5340-990-9300	268	233
5340-990-9300	KITS	
5340-990-9300	219A	89
5340-990-9301	62	
5340-990-9301	95	144
5340-990-9301	95	57
5340-990-9301	11A	188
5340-990-9301	112	10
5340-990-9301	116	
5340-990-9301	117	
5340-990-9301	119	
5340-990-9301	221	42
5340-990-9301	221	43
5340-991-3872	83	180
5340-991-7030	59	39
5340-992-4457	49	54A
5340-993-1470	95	100
5340-993-1470	95	109
5340-993-1470	95	84
5340-993-1470	95	87
5340-993-1470	95	91
5340-993-1470	95	99
5340-993-1470	129	
5340-993-1470	KITS	
5340-993-1471	95	57
5340-993-1471	129	
5340-993-1472	BULK	
5340-993-1474	BULK	

STOCK NUMBER	FIGURE NUMBER	ITEM NUMBER
5340-993-5474	253	30C
5340-993-5474	BULK	
5340-993-5476	95	121
5340-993-5476	95	122
5340-993-5476	95	123
5340-993-5476	95	138
5340-993-5476	95	139
5340-993-5476	95	140
5340-993-5476	95	44
5340-993-5476	95	7
5340-993-5478	62	
5340-993-5478	95	139
5340-993-5478	129	
5340-993-5478	139	
5340-993-5478	182	
5340-993-5478	KITS	
5340-993-6244	62	
5340-993-6244	76	12
5340-993-6244	109	
5340-993-6244	115	
5340-993-6244	119	
5340-993-6244	129	
5340-993-6244	139	
5340-993-6244	211	
5340-993-6244	213	
5340-993-6244	217	
5340-993-6244	220	
5340-993-6244	221	113
5340-993-6244	221	119
5340-993-6244	221	120
5340-993-6244	221	139
5340-993-6244	KITS	
5340-993-6245	95	140
5340-993-6245	112	4
5340-993-6245	115	
5340-993-6245	116	
5340-993-6245	119	
5340-993-6245	273	
5340-993-6245	277	
5340-993-6245	KITS	
5340-993-6246	182	
5340-993-6246	218	75
5340-993-6246	253	24A
5340-993-6247	95	171
5340-993-6247	139	
5340-993-6247	208	14
5340-993-6247	221	128
5340-993-6247	221	132
5340-993-6247	221	94
5340-993-6247	KITS	
5340-993-6247	219A	93
5340-993-6248	253	23A
5340-993-6249	62	
5340-993-6249	95	14
5340-993-6249	95	24
5340-993-6249	95	28
5340-993-6249	95	40
5340-993-6249	95	41
5340-993-6249	95	42
5340-993-6249	95	6
5340-993-6249	116	
5340-993-6249	221	127
5340-993-6249	221	128
5340-993-6249	249	30
5340-993-6249	KITS	
5340-993-6250	BULK	
5340-993-6250	KITS	
5340-993-9524	BULK	
5340-994-1634	18	
5340-995-4996	21	
5340-995-6333	192	50
5340-995-6333	192	68
5340-995-6333	193	44C
5340-995-8005	62	
5340-995-8005	95	43
5340-995-8005	95	75
5340-995-8005	182	
5340-996-4432	74	80
5340-996-4432	81	108A
5340-996-4432	102	37C
5340-996-4432	103	
5340-997-7046	BULK	
5340-998-0661	183A	68
5340-998-2794	248	46
5350-050-1094	MSUP	
5350-161-9715	MSUP	
5350-174-0997	MSUP	
5350-174-6460	MSUP	
5350-192-5049	MSUP	
5350-192-5050	MSUP	
5350-221-0872	MSUP	
5350-224-7201	MSUP	
5350-224-7205	MSUP	
5350-264-3489	MSUP	
5350-286-4851	MSUP	
5350-721-8117	MSUP	
5355-019-0326	265	67
5355-019-0326	268	38
5355-089-5085	169	5
5355-160-6850	176	1
5355-160-6850	177	1
5355-168-3206	185	13
5355-176-6176	75	30
5355-180-8443	170	1
5355-180-8443	171	1
5355-410-0027	378	42
5355-434-1773	157	
5355-434-1773	158	
5355-505-2237	165	40
5355-519-7480	170	17
5355-519-7480	171	19
5355-538-6384	170	11
5355-538-6384	171	13
5355-567-8589	184	59
5355-576-4732	122	9
5355-579-2896	167	44
5355-579-2896	201	102
5355-579-2896	201	28
5355-579-2896	201	3
5355-579-2896	201	71
5355-579-2896	201	80
5355-616-9604	189	14
5355-667-7456	170	14
5355-667-7456	171	16
5355-667-9155	37A	20
5355-667-9155	37A	74
5355-667-9155	37A	9
5355-668-6367	170	13
5355-668-6367	171	15
5355-668-6489	169	2A
5355-757-5484	281	11
5355-780-6462	205	38
5355-827-8682	125	1
5355-836-0920	BULK	
5355-844-8866	177	3A

STOCK NUMBER	FIGURE NUMBER	ITEM NUMBER	STOCK NUMBER	FIGURE NUMBER	ITEM NUMBER
5355-845-2280	169	3	5360-455-6183	102	7I
5355-845-2280	173	3	5360-455-6184	102	7I
5355-871-7922	176	2	5360-457-2834	67	51
5360-013-3845	65	31	5360-457-2839	67	8
5360-014-1824	152	12	5360-462-3209	64A	7
5360-014-1824	156	12	5360-463-4113	150A	11
5360-018-9370	146	3	5360-464-5779	64A	58
5360-019-5166	74	61	5360-484-0977	64A	44
5360-019-5228	74	43	5360-484-0978	64A	11
5360-022-5328	138	12	5360-485-9768	64A	33
5360-034-3692	123	8	5360-487-4156	239	57
5360-043-2031	123	8	5360-489-8455	153	
5360-043-2035	123	5	5360-490-5916	64A	67
5360-043-4177	123	9	5360-498-4509	67	19
5360-057-9554	203	16	5360-507-5416	134	63
5360-064-9211	71	71	5360-511-1358	113	9
5360-072-2232	128	6	5360-513-5439	144	7
5360-072-5530	82	31	5360-527-0994	154	17
5360-073-1030	BULK		5360-589-5434	230	25
5360-083-6249	134	54	5360-589-5434	231	45
5360-088-9836	123	5	5360-597-2604	262A	3
5360-089-2519	265	14	5360-602-0679	216	77
5360-089-2519	268	81	5360-698-6487	138	5
5360-105-0532	33	29	5360-704-7430	265	215
5360-105-1191	100	22	5360-725-5873	272	13
5360-116-1286	65	52	5360-725-5875	272	26
5360-122-1173	67	31	5360-754-7451	79	7
5360-134-3168	134	78	5360-756-2769	96	10
5360-136-2414	63	50	5360-759-0767	79	32
5360-159-4830	67A	38	5360-759-8298	74	71
5360-178-7882	190	174	5360-763-1339	149	100
5360-197-1785	150	16	5360-763-1339	274	62
5360-197-1786	150	4	5360-774-9418	17	25A
5360-197-6593	150	20	5360-781-8538	63	39
5360-197-6599	150	13	5360-783-7545	63	43
5360-197-6612	150	10	5360-787-0610	132	19
5360-197-6618	150A	19	5360-787-0610	146	24
5360-197-6619	150A	26	5360-828-8066	42A	37
5360-199-7427	65	10	5360-834-6312	147	7
5360-199-7444	65	91	5360-849-4380	79	7
5360-200-9665	215	29	5360-856-0217	188	17A
5360-201-0272	182		5360-856-1114	223	52
5360-201-0272	183	22	5360-856-3157	270	47
5360-201-0272	184		5360-862-9235	263	20
5360-201-0272	199		5360-863-1232	223	99
5360-201-0272	201	1	5360-863-7962	270	29
5360-201-0272	201	100	5360-877-3374	148	17B
5360-201-0272	201	16	5360-887-4691	59	19
5360-201-0272	201	26	5360-890-7780	111	8
5360-201-0272	201	37	5360-891-6571	111	4
5360-201-0272	201	44	5360-894-6609	33	45
5360-201-0272	201	53	5360-898-9742	263	25C
5360-201-0272	201	64	5360-900-3751	49	24
5360-201-0272	201	78	5360-901-1945	64	5
5360-201-0272	201	89	5360-901-4953	71	123
5360-201-0272	202	23	5360-903-4626	100	22
5360-201-0272	183A	32	5360-903-4626	BULK	
5360-218-5801	67	8	5360-903-4655	136	10
5360-321-3485	165	88	5360-908-9770	136	9
5360-321-3497	160	18	5360-913-2355	24	17
5360-321-3498	160	36	5360-914-6070	268	149A
5360-321-3499	160	26	5360-923-4409	149	56
5360-403-7036	72	100	5360-923-4428	268	205
5360-403-7036	74	11	5360-930-0121	42B	68
5360-405-4654	67A	52	5360-930-0139	42B	69
5360-408-1294	150A	3	5360-936-6109	17	9
5360-419-0827	37B	47	5360-937-1697	224	18
5360-422-1631	37B	5	5360-938-6606	24	
5360-437-4540	67	50	5360-959-7626	228	107
5360-442-6267	71	124	5360-959-7627	228	106
5360-455-6181	103	6G	5360-959-7627	228	23B

STOCK NUMBER	FIGURE NUMBER	ITEM NUMBER
5360-963-9957	82	6A
5360-986-6304	134	33
5360-987-7504	234	8
5360-989-0547	15	1
5360-989-7627	100	22
5360-995-7983	79	23
5360-997-6319	134	24
5360-998-4998	100	22
5365-004-1021	118	97A
5365-004-2423	60	37
5365-004-2423	61	38
5365-004-6929	60	33
5365-004-6929	61	35
5365-014-2006	121	16
5365-014-5887	63	124
5365-032-1817	230	66
5365-032-1817	231	55
5365-033-9159	149	74
5365-033-9176	149	107
5365-033-9176	274	69
5365-043-2128	107	6
5365-043-2128	108	2
5365-052-5999	230	
5365-054-8789	89	109
5365-059-6286	248	23
5365-059-6350	176	41
5365-059-6350	177	47
5365-062-4074	83	35K
5365-068-6559	74	70
5365-068-6608	76	148
5365-069-3153	70	40
5365-071-4500	96	8
5365-079-2911	173	23E
5365-080-1409	67A	61
5365-080-1409	67A	65
5365-080-1410	67A	40
5365-080-1846	51	20
5365-080-1846	53	4
5365-080-1846	83	157
5365-080-1846	88	100C
5365-080-1846	88	95
5365-080-1852	71	93
5365-081-1372	266	7
5365-081-3458	149	59
5365-081-9013	76	93
5365-083-6637	267	36
5365-088-1701	88	69
5365-095-8261	170	20
5365-095-8261	171	22
5365-102-8843	65	50
5365-104-2588	272	5
5365-105-3039	71	65
5365-106-9982	267	32
5365-107-7351	275	
5365-109-5201	146	31
5365-116-3553	267	55
5365-123-2952	67	58
5365-124-3042	54	10
5365-124-3042	71	24
5365-124-3042	71	7
5365-124-3042	76	106
5365-124-3042	76	41
5365-124-3042	81	54
5365-124-3042	83	166
5365-124-3042	83	261
5365-124-3042	83	59
5365-124-3042	88	21
5365-124-3042	89	23
5365-133-3670	67	29
5365-134-3332	63	104
5365-134-3353	83	142
5365-134-3888	83	
5365-134-3889	83	
5365-134-3889	87	
5365-134-3890	83	
5365-134-3890	83	134
5365-134-3890	83	177
5365-134-3890	87	
5365-135-4947	134	7A
5365-142-0227	183	7
5365-142-7059	BULK	
5365-151-4995	204A	111
5365-151-5066	68	78
5365-151-5067	68	84
5365-151-5896	37B	6
5365-151-6014	68	45
5365-151-6014	68	75
5365-151-6015	68	45
5365-151-6015	68	75
5365-151-6016	68	45
5365-151-6016	68	75
5365-151-7048	65	44
5365-151-7368	150A	25
5365-151-7647	68	31
5365-152-0500	183A	65
5365-152-0691	68	81
5365-152-0692	68	81
5365-152-0693	68	81
5365-152-0698	68	81
5365-157-7828	68	35
5365-158-3688	68	71
5365-158-3696	68	31
5365-158-3701	68	31
5365-158-3717	68	31
5365-158-3804	183A	81
5365-158-3868	68	86
5365-158-3869	68	86
5365-158-3870	68	86
5365-158-3871	68	86
5365-159-3897	68	46
5365-159-4825	67A	32
5365-164-3864	70	
5365-167-4888	266	35
5365-168-6640	76	143B
5365-168-6951	81	185
5365-168-6951	83	320
5365-176-0370	221A	5
5365-176-0387	221A	3
5365-176-0614	192	123
5365-180-7800	37B	21
5365-180-7800	37B	28
5365-181-5814	170	28
5365-181-5814	171	30
5365-182-4018	70	
5365-183-7997	171	10
5365-197-6562	150	11
5365-200-0580	59	9
5365-200-0580	88	11
5365-200-0580	89	16
5365-200-0580	140	24
5365-200-7235	138	40
5365-200-7235	274	7
5365-200-7553	138	64
5365-205-4224	128	3
5365-205-6701	89	7
5365-209-4077	192	101
5365-209-4077	192	99
5365-223-3139	69	48
5365-223-3139	70	
5365-223-3935	69	47A
5365-223-3935	70	

STOCK NUMBER	FIGURE NUMBER	ITEM NUMBER	STOCK NUMBER	FIGURE NUMBER	ITEM NUMBER
5365-230-0487	68	5	5365-405-4661	68	76
5365-235-2349	134	69	5365-405-4662	68	76
5365-235-4547	64A	8	5365-405-4663	68	76
5365-235-4560	37A	11	5365-405-4664	67A	54
5365-235-4560	37A	22	5365-405-4668	67A	28
5365-241-5304	37A	36	5365-405-4669	67A	65
5365-242-4509	183A	8	5365-408-5153	62	
5365-247-7243	37A	56	5365-409-1043	150A	17
5365-247-7243	37A	84	5365-409-1043	150A	2
5365-256-2877	154	4	5365-409-8231	150A	5
5365-257-0211	49	57D	5365-411-0029	72	96
5365-257-0211	51	69	5365-411-0029	74	7
5365-257-1141	68	11	5365-411-0030	190A	42
5365-257-1142	68	11	5365-416-8501	66	11
5365-263-1143	63	68	5365-422-0582	83	21F
5365-263-1143	154	28	5365-431-6723	67A	50
5365-269-4448	102	1	5365-451-1133	67A	55
5365-278-8799	53	42	5365-474-4748	138	3
5365-278-8803	129	13	5365-483-7834	57	17
5365-278-8805	88	7	5365-483-7834	58	16
5365-278-8805	89	12	5365-485-4342	BULK	
5365-282-1646	149	89	5365-485-9755	234	17
5365-282-1660	265	258	5365-485-9767	64A	4
5365-282-1660	268	190	5365-488-1233	69	30
5365-282-4971	170	47	5365-490-1123	186A	3
5365-282-4971	171	47	5365-490-5918	190A	17
5365-282-5322	BULK		5365-494-9662	268	171
5365-282-7127	BULK		5365-503-6089	194	
5365-285-6728	81	193	5365-513-0896	192	83
5365-285-7124	149	27	5365-514-0390	96	15
5365-287-0095	87	17	5365-514-2474	63	26
5365-287-0095	87	5	5365-514-2474	67	17
5365-287-0095	224	47	5365-517-0409	113	8
5365-287-0103	BULK		5365-530-4892	216	53
5365-289-3019	262	52	5365-530-6164	230	31
5365-293-9800	95	161	5365-530-6164	230	59
5365-293-9800	95	85	5365-530-6164	231	29
5365-293-9800	95	86	5365-530-6164	231	74
5365-293-9800	95	87	5365-530-6164	231	77
5365-293-9800	109		5365-531-7697	216	53
5365-293-9800	109	77C	5365-531-7699	216	53
5365-293-9800	112	105	5365-531-7700	216	53
5365-293-9800	112	113	5365-531-7701	216	53
5365-293-9800	112	116	5365-543-3388	18	
5365-293-9800	112	57	5365-543-3388	18	93D
5365-293-9800	115		5365-543-3388	18	95D
5365-293-9800	117		5365-543-3388	18	99D
5365-293-9800	119		5365-543-3388	32	10
5365-293-9800	139		5365-547-0309	124	8
5365-293-9800	178	117	5365-560-1526	211	
5365-293-9800	179	34	5365-564-2369	11C	13B
5365-293-9800	BULK		5365-564-2369	BULK	
5365-293-9800	KITS		5365-564-4429	284	43
5365-294-0575	109		5365-564-4429	285	44
5365-299-0367	68	11	5365-564-4429	287	8
5365-299-0369	67A	50	5365-579-2908	230	89
5365-299-0370	67A	54	5365-579-9673	18	153D
5365-299-0372	67A	71	5365-580-3641	BULK	
5365-302-8098	BULK		5365-580-3647	BULK	
5365-302-8099	BULK		5365-580-4834	109	
5365-304-7679	221	132	5365-580-4834	115	
5365-304-7679	KITS		5365-580-4834	178	142
5365-307-4512	57	4	5365-580-4893	36	
5365-337-8737	95	100	5365-580-4893	95	110
5365-337-8737	95	90	5365-580-4893	95	89
5365-337-8737	117		5365-580-5317	BULK	
5365-337-8737	119		5365-580-5791	119	126
5365-351-7982	68	11	5365-580-5791	256	15
5365-404-0873	189A	5	5365-580-5873	228	168
5365-405-4648	67A	47	5365-580-5873	228	180
5365-405-4660	68	76	5365-580-5873	228	191

STOCK NUMBER	FIGURE NUMBER	ITEM NUMBER
5365-582-1549	74	33
5365-585-1249	BULK	
5365-585-2542	BULK	
5365-594-6054	BULK	
5365-596-6396	96	5
5365-598-0790	KITS	
5365-598-0857	247	12
5365-598-1215	63	22
5365-598-1215	78	3
5365-598-1312	63	34
5365-598-1312	138	8
5365-598-1356	265	89
5365-598-1356	268	25
5365-598-1394	63	114
5365-598-1395	67	5
5365-598-1395	265	306
5365-598-1395	268	267
5365-598-1474	18	149C
5365-598-1474	31	138
5365-598-2203	170	41
5365-598-2203	171	43
5365-598-6273	89	62
5365-598-8998	145	14
5365-614-4475	30	8
5365-616-4993	76	135B
5365-616-4993	76	60B
5365-618-6485	95	84
5365-618-6485	109	
5365-618-6485	110	37A
5365-618-6485	KITS	
5365-619-0132	160	11
5365-619-0825	230	91
5365-619-6772	269	21
5365-619-7229	160	10
5365-619-7310	265	52
5365-619-7310	268	6
5365-622-1810	109	
5365-622-1810	198	30
5365-622-1810	37A	16
5365-622-1810	KITS	
5365-625-9941	81	121
5365-625-9941	91	12
5365-630-7111	81	121A
5365-630-7111	F19	11
5365-650-2877	26	
5365-662-3098	62	
5365-662-3098	95	100
5365-662-3098	QC1	
5365-662-3098	109	
5365-662-3098	110	98
5365-662-3098	112	10
5365-662-3098	112	26
5365-662-3098	112	37
5365-662-3098	112	5
5365-662-3098	112	61
5365-662-3098	116	
5365-662-3098	117	
5365-662-3098	119	
5365-662-3098	119	96
5365-662-3098	129	
5365-662-3098	139	107
5365-662-3098	139	114
5365-662-3098	143	
5365-662-3098	178	118
5365-662-3098	178	141
5365-662-3098	179	35
5365-662-3098	182	
5365-662-3098	206	7
5365-662-3098	208	
5365-662-3098	213	
5365-662-3098	257	
5365-662-3098	277	
5365-662-3098	KITS	
5365-662-3098	219A	90
5365-662-3100	95	163
5365-662-3100	109	
5365-662-3100	119	
5365-662-3100	129	
5365-662-3100	139	
5365-662-3100	143	
5365-662-3100	182	
5365-662-3100	213	
5365-662-3100	253	27C
5365-662-3100	KITS	
5365-662-8788	32	
5365-662-8788	110	96
5365-662-8788	119	
5365-662-8788	129	
5365-662-8788	KITS	
5365-663-2380	154	21
5365-663-2399	26	14
5365-663-2399	26	21
5365-664-3042	248	47
5365-680-3385	83	35N
5365-680-8684	71	16
5365-682-4624	109	
5365-682-4624	119	
5365-682-4624	198	44
5365-684-2093	95	40
5365-684-2093	95	88
5365-684-2093	95	96
5365-684-2093	109	
5365-684-2093	115	
5365-684-2093	116	
5365-684-2093	117	
5365-684-2093	119	
5365-684-2093	129	
5365-684-2093	139	
5365-684-2093	178	116
5365-684-2093	221	119
5365-684-2093	256	21A
5365-684-2093	257	9F
5365-684-2093	276	
5365-684-2093	KITS	
5365-684-2093	217B	2
5365-684-2093	217B	9
5365-684-5983	184	
5365-684-7923	119	
5365-684-7923	198	25
5365-691-6003	88	76A
5365-698-3418	BULK	
5365-709-1822	BULK	
5365-715-1152	145	3
5365-716-8870	71	14
5365-716-8870	71	27B
5365-720-2894	BULK	
5365-720-8064	BULK	
5365-720-9221	128	8
5365-721-4828	BULK	
5365-721-5528	82	35
5365-721-8187	248	94
5365-723-0299	133	47
5365-723-0308	133	63
5365-725-0969	128	7
5365-725-5877	272	42
5365-726-4161	71	30
5365-726-4161	71	55
5365-726-4161	71	83
5365-726-4161	102	22
5365-726-4161	103	20
5365-726-4161	126	13
5365-726-4161	128	12

STOCK NUMBER	FIGURE NUMBER	ITEM NUMBER	STOCK NUMBER	FIGURE NUMBER	ITEM NUMBER
5365-726-4161	133	61	5365-808-2527	109	
5365-726-4161	148	2	5365-808-2527	110	99
5365-726-4161	228	141	5365-808-2527	117	
5365-740-6471	71	98	5365-808-2527	119	
5365-754-1082	72	95	5365-808-2527	129	
5365-754-1082	74	6	5365-808-2527	179	36
5365-754-1083	59	29	5365-808-2527	277	
5365-757-4477	132	12	5365-808-3957	192	92
5365-757-4477	146	17	5365-808-4467	74	52
5365-757-7165	128	24	5365-816-9986	119	
5365-763-1360	265	105	5365-818-2059	253	45
5365-763-1360	268	123	5365-818-2059	255	5
5365-763-1361	265	109	5365-822-5180	34	
5365-763-1361	268	111	5365-822-5180	95	
5365-763-5016	88	83	5365-824-1351	192	105
5365-769-2335	234	53	5365-824-1351	233	6
5365-781-7254	210	41	5365-824-1351	67A	65
5365-781-7291	137	20	5365-825-0851	59	16
5365-781-7291	137	42	5365-828-8526	BULK	
5365-790-9744	113	12	5365-829-2057	83	197
5365-795-1251	76	140	5365-829-2058	83	228
5365-795-1251	76	31	5365-829-2059	83	314
5365-795-1251	76	58	5365-834-1504	121	13
5365-795-1251	80	18	5365-834-1504	122	7
5365-795-1251	80	7	5365-836-2440	224	11
5365-795-1251	81	195	5365-837-0856	63	91
5365-795-1251	81	196	5365-837-0856	72	23
5365-795-1251	81	197	5365-837-0856	72	54
5365-795-1251	81	64	5365-837-0856	73	13
5365-795-1251	81	80	5365-837-0856	81	116
5365-795-1251	83	100	5365-837-0856	87	19
5365-795-1251	83	101	5365-837-0856	119	
5365-795-1251	83	139	5365-837-0856	119	37
5365-795-1251	83	174	5365-837-0856	119	81
5365-795-1251	83	175	5365-837-0856	129	
5365-795-1251	83	176	5365-837-0856	134	81
5365-795-1251	83	207	5365-837-0856	213	
5365-795-1251	83	305	5365-837-0856	220	
5365-795-1251	83	358	5365-837-0856	221	30
5365-795-1251	83	99	5365-837-0856	221	70
5365-795-1251	88	100A	5365-837-0856	265	106
5365-795-1251	88	32A	5365-837-0856	268	121
5365-795-1251	88	61	5365-837-0856	273	18A
5365-795-1251	88	89A	5365-838-4891	BULK	
5365-795-1251	88	93A	5365-841-0746	224	24
5365-801-2500	BULK		5365-841-1977	62	11
5365-803-0214	265	260	5365-841-1977	QC1	22
5365-803-7303	263	24A	5365-842-1327	81	84B
5365-803-7312	BULK		5365-842-1327	83	215
5365-803-7313	16	1	5365-843-7120	71	97
5365-803-7313	145	6	5365-845-1092	78	13
5365-803-7313	KITS		5365-845-1092	78	9
5365-803-7314	183	25	5365-845-1092	82	18
5365-803-7314	233	29	5365-845-1092	82	22
5365-803-7320	BULK		5365-845-3502	63	93
5365-804-2025	223	63	5365-845-3502	72	88
5365-804-2027	BULK		5365-845-3502	74	13
5365-804-2274	108	2	5365-845-3502	119	
5365-804-2276	42B	78	5365-845-3502	129	
5365-804-2786	BULK		5365-845-3502	134	49
5365-804-6860	BULK		5365-845-3502	138	1
5365-804-7693	266	14	5365-845-3502	139	55
5365-804-9735	216	17	5365-845-3502	149	31
5365-804-9737	267	7	5365-845-3502	218	
5365-806-4637	26	13	5365-845-3502	274	1
5365-807-5330	192	119	5365-851-5459	248	121
5365-807-5330	233		5365-852-6788	71	65A
5365-807-5333	BULK		5365-856-7295	102	38
5365-807-7968	53	6	5365-856-7295	103	31
5365-807-7968	216	64	5365-862-9222	269	16
5365-807-7968	216	64	5365-862-9295	223	111

STOCK NUMBER	FIGURE NUMBER	ITEM NUMBER
5365-863-7945	73	50
5365-866-2145	63	129
5365-871-0232	107	3
5365-871-0233	107	4
5365-871-4386	BULK	
5365-871-4388	67A	37
5365-878-4784	BULK	
5365-881-0597	152	9
5365-881-0597	156	9
5365-881-3778	271	23A
5365-882-8302	102	55
5365-882-8302	103	48
5365-883-8403	192	63A
5365-886-1315	73	64
5365-886-1319	72	28
5365-886-1319	72	59
5365-886-1319	73	4
5365-887-4690	53	11
5365-889-9578	103	1
5365-889-9593	102	8
5365-889-9593	103	10
5365-891-1452	224	21
5365-891-8416	224	47A
5365-895-9429	83	341
5365-895-9430	83	332
5365-897-8925	81	136
5365-897-8925	83	267
5365-898-0101	75	92
5365-898-0102	75	136
5365-898-0102	75	152
5365-898-0102	75	177
5365-898-0102	75	187
5365-898-9227	81	68A
5365-901-3652	49	22
5365-906-3614	76	31A
5365-906-3614	76	50
5365-906-3614	80	17
5365-906-3614	80	6
5365-906-3614	83	208
5365-906-3614	83	351
5365-906-3614	83	354
5365-906-3614	83	357
5365-906-3614	83	361
5365-906-3614	83	98
5365-906-3614	92	28A
5365-906-3614	92	82A
5365-906-3615	76	32
5365-906-3615	76	49
5365-906-3615	80	19
5365-906-3615	80	20
5365-906-3615	81	198
5365-906-3615	83	134
5365-906-3615	83	177
5365-906-3615	83	359
5365-906-3615	88	97A
5365-906-5995	47	6
5365-908-9758	76	140
5365-908-9758	83	97
5365-908-9758	87	3A
5365-909-3111	266	23
5365-913-3999	268	198
5365-914-6488	A48	2
5365-914-9902	81	199
5365-914-9902	83	355
5365-914-9903	81	59
5365-914-9903	83	256
5365-914-9903	83	257
5365-916-5871	76	63A
5365-916-5871	88	39
5365-916-5871	89	51
5365-917-7863	230	10
5365-917-7863	230	61
5365-917-7863	230	68
5365-917-7863	231	7
5365-917-7863	231	5
5365-917-7863	231	70
5365-917-7863	231	8
5365-921-0254	149	13
5365-921-0254	274	45
5365-923-4413	76	152
5365-923-4413	76	92
5365-923-4419	76	167
5365-923-4420	149	30
5365-923-4420	274	40
5365-924-5434	149	12
5365-924-5434	274	44
5365-924-5439	149	37
5365-928-9017	148	18
5365-930-7244	88	65B
5365-930-7244	89	70
5365-931-7100	76	72
5365-936-4351	70	6
5365-936-4352	70	7
5365-943-6172	67A	67
5365-944-1787	81	88
5365-946-8322	247	23
5365-947-3561	88	48B
5365-952-7571	83	335
5365-952-7572	83	82
5365-952-7572	83	89
5365-952-7573	83	79
5365-963-8815	83	223
5365-964-0067	79	15
5365-965-7414	52	13
5365-984-0270	240	32
5365-985-6707	83	217
5365-989-4293	11A	76
5365-989-4293	271	14
5365-989-4294	11A	77
5365-989-4294	271	14
5365-989-4295	11A	78
5365-989-4295	271	14
5365-989-4306	11A	80
5365-989-4306	271	14
5365-989-4320	11A	82
5365-989-4320	271	14
5365-992-8480	183	44
5365-993-5469	192	63
5530-129-7721	BULK	
5610-241-2785	MSUP	
5610-461-1173	MSUP	
5610-641-0427	MSUP	
5610-857-4393	MSUP	
5640-021-2739	41	38
5640-068-6636	41	45
5640-068-6637	41	43
5640-068-6640	41	41
5640-068-6645	41	41
5640-068-6648	41	43
5640-068-6649	41	45
5640-088-4917	41	51
5640-103-2379	41	53
5640-103-2380	41	
5640-570-9760	41	47
5640-570-9761	41	53
5640-570-9762	41	38
5640-570-9764	41	38
5640-578-9483	41	37
5640-727-4440	41	38
5640-731-5154	41	39
5640-731-5157	41	51
5640-731-5159	41	39

STOCK NUMBER	FIGURE NUMBER	ITEM NUMBER
5640-756-2770	41	29
5640-756-2771	41	30
5640-756-2773	41	32
5640-756-2774	41	34
5640-756-2775	41	28
5640-756-2776	41	40
5640-756-2777	41	44
5640-756-2778	41	36
5640-756-2779	41	42
5640-756-2780	41	44
5640-756-2781	41	7
5640-756-2782	41	2
5640-756-2783	41	3
5640-756-2784	41	6
5640-756-2789	41	47
5640-859-9011	41	42
5640-859-9012	41	40
5640-878-0335	39	3
5640-906-3517	41	38
5640-906-3519	41	5
5640-906-3520	41	9
5640-906-3523	41	38
5640-906-6433	40	45
5640-907-4885	40	47
5640-907-4890	38	1
5640-910-9667	40	28
5640-912-1159	38	8
5640-916-2539	38	4
5640-918-3037	38	7
5640-924-8258	40	29
5640-939-5909	40	34
5640-939-9967	40	
5640-940-7541	40	
5640-940-7541	40	
5640-940-7541	40	
5640-940-8196	40	32
5640-940-8197	40	4
5640-940-8234	40	31
5640-941-3622	40	30
5640-941-8748	40	33
5640-943-0773	39	11
5640-943-0775	39	7
5640-948-6546	38	6
5680-763-0866	BULK	
5680-763-0867	BULK	
5680-763-0868	BULK	
5680-763-0869	BULK	
5680-923-4400	40	9
5680-926-4635	BULK	
5680-926-4636	BULK	
5680-926-4637	BULK	
5680-926-4638	BULK	
5680-926-4639	BULK	
5680-926-4640	BULK	
5680-926-4641	BULK	
5680-926-4643	BULK	
5680-926-4644	BULK	
5680-926-4645	BULK	
5680-926-4647	BULK	
5680-926-4649	BULK	
5680-939-9787	40	15
5680-941-8749	40	26
5680-941-8756	40	5
5680-941-8757	40	9
5680-945-9001	40	22
5680-948-9544	40	5
5821-053-1974	275	22
5821-053-1982	275	22
5821-053-1993	275	20
5821-053-1996	275	22
5821-075-0174	192	110
5821-075-0174	233	20
5821-075-0176	211	
5821-075-2424	232	37
5821-075-2426	191	10
5821-075-2426	191	42
5821-075-2426	192	
5821-075-2426	195	23
5821-075-2426	195	47
5821-075-2428	233	1
5821-075-2429	233	14
5821-075-2430	233	17
5821-075-2431	232	49
5821-075-2432	233	8
5821-075-2433	232	47
5821-075-2434	233	4
5821-075-2436	232	33
5821-075-2442	232	46
5821-076-7134	233	5
5821-537-4524	182	13
5826-111-6776	275	
5826-505-3094	158	28
5826-697-9880	157	28
5826-834-3041	157	28
5826-897-4889	157	34
5835-082-0320	169	32
5845-901-2585	267	12
5850-620-3633	167	14
5895-944-4858	184	33
5905-003-5782	204A	19
5905-003-5782	204A	42
5905-003-7717	204A	85
5905-006-5571	204A	19
5905-008-6888	204A	81
5905-013-9436	68	6
5905-018-0892	68	6
5905-018-0893	68	6
5905-018-0895	68	6
5905-018-0897	68	6
5905-021-9002	68	6
5905-021-9003	68	6
5905-027-0538	204A	19
5905-027-9818	68	6
5905-056-4901	203	37
5905-057-1870	195	33
5905-057-8313	228	78
5905-057-8314	191	29
5905-057-8314	195	33
5905-059-9451	182	25
5905-059-9951	192	24
5905-062-1538	68	6
5905-064-9215	205	20
5905-067-9384	189A	62
5905-075-3347	192	76
5905-087-5849	189A	53
5905-104-5755	204A	35
5905-104-8330	173	20
5905-104-8334	192	41
5905-104-8336	BULK	
5905-104-8348	177	41
5905-104-8349	189A	44
5905-104-8350	186	18
5905-104-8357	204A	17
5905-104-8357	204A	18
5905-104-8358	169	37
5905-104-8358	173	36
5905-104-8358	194	125
5905-104-8358	204A	18
5905-104-8360	204A	17
5905-104-8360	204A	18
5905-104-8364	204A	18
5905-104-8365	204A	17

STOCK NUMBER	FIGURE NUMBER	ITEM NUMBER
5905-104-8365	204A	18
5905-104-8367	204A	18
5905-104-8368	194	159
5905-104-8368	204A	66
5905-105-7764	194	126
5905-105-7764	194	172
5905-105-7764	194	204
5905-105-7764	194	76
5905-105-7765	204A	17
5905-105-7765	204A	18
5905-105-7767	204A	17
5905-105-7767	204A	18
5905-105-7768	194	134
5905-105-7768	194	93
5905-106-1247	277	
5905-106-1247	BULK	
5905-106-1249	194	149
5905-106-1262	68	6
5905-106-1273	192	36
5905-106-1278	169	36
5905-106-1278	173	34
5905-106-1278	194	169
5905-106-1278	204A	17
5905-106-1278	204A	18
5905-106-1282	277	26
5905-106-1356	204A	55
5905-106-1357	204A	17
5905-106-1357	204A	18
5905-106-3666	194	139
5905-106-3666	194	167
5905-106-3666	194	96
5905-106-3666	204A	154
5905-106-3666	204A	17
5905-106-3666	204A	18
5905-106-3666	204A	73
5905-106-9344	192	39
5905-106-9344	192	57
5905-106-9356	204A	17
5905-106-9356	204A	18
5905-106-9356	204A	87
5905-107-0656	204A	54
5905-110-0196	177	31
5905-110-0310	192	44
5905-110-0388	194	86
5905-110-0388	204A	17
5905-110-0388	204A	18
5905-110-0388	204A	72
5905-110-0721	68	6
5905-110-0991	277	
5905-110-7620	194	133
5905-110-7620	194	170
5905-110-7620	194	79
5905-110-7620	204A	150
5905-110-7620	204A	32
5905-110-7622	194	156
5905-110-7622	194	185
5905-110-7622	194	99
5905-110-7622	204A	18
5905-111-1678	204A	17
5905-111-1678	204A	18
5905-111-1679	204A	153
5905-111-1679	204A	18
5905-111-1679	204A	39
5905-111-1681	204A	17
5905-111-1681	204A	18
5905-111-1682	204A	17
5905-111-1682	204A	18
5905-111-1684	204A	18
5905-111-4727	194	207
5905-111-4727	194	98
5905-111-4736	189	36
5905-111-4738	192	37
5905-111-4738	192	54
5905-111-4858	192	43
5905-112-1233	204A	19
5905-112-1392	204A	69
5905-112-1443	189	37
5905-113-4858	204A	17
5905-113-4858	204A	18
5905-113-4860	169	41
5905-114-0708	194	103
5905-114-0708	204A	151
5905-114-0710	173	30
5905-114-0711	173	31
5905-114-0711	194	104
5905-114-0711	194	136
5905-114-0711	194	174
5905-114-0711	194	195
5905-114-0711	204A	18
5905-114-5339	204A	17
5905-114-5339	204A	18
5905-114-5343	194	127
5905-114-5343	194	211
5905-114-5344	204A	17
5905-114-5344	204A	18
5905-114-5388	176	29
5905-114-5388	177	39
5905-114-5398	BULK	
5905-114-5417	204A	155
5905-114-5428	177	40
5905-115-2261	204A	18
5905-115-2262	204A	17
5905-115-2262	204A	18
5905-115-3560	204A	17
5905-115-3560	204A	18
5905-115-3560	204A	88
5905-115-3562	204A	17
5905-115-3562	204A	18
5905-115-8055	204A	17
5905-115-8055	204A	18
5905-116-2394	204A	52
5905-116-8554	204A	17
5905-116-8554	204A	18
5905-116-8555	204A	17
5905-116-8555	204A	18
5905-116-8555	204A	74
5905-116-8556	177	34
5905-116-8556	204A	17
5905-116-8556	204A	18
5905-116-8560	BULK	
5905-118-4559	194	123
5905-118-4559	204A	17
5905-118-4559	204A	18
5905-119-3503	194	151
5905-119-3504	169	43
5905-119-3504	194	176
5905-119-3504	204A	17
5905-119-3504	204A	18
5905-119-3505	204A	17
5905-119-3505	204A	18
5905-119-8768	194	205
5905-119-8811	194	105
5905-119-8811	194	155
5905-120-9152	204A	17
5905-120-9152	204A	18
5905-120-9154	194	180
5905-120-9154	204A	94
5905-121-9920	204A	152
5905-121-9920	204A	17
5905-121-9920	204A	18
5905-121-9932	194	111
5905-121-9932	204A	92

STOCK NUMBER	FIGURE NUMBER	ITEM NUMBER	STOCK NUMBER	FIGURE NUMBER	ITEM NUMBER
5905-121-9938	204A	17	5905-159-6514	68	6
5905-121-9938	204A	18	5905-159-6515	68	6
5905-122-0004	204A	17	5905-159-6517	68	6
5905-122-0004	204A	18	5905-159-6524	68	6
5905-126-6683	169	39	5905-159-6537	68	6
5905-126-6683	173	38	5905-159-6538	68	6
5905-126-6683	194	122	5905-159-6539	68	6
5905-126-6683	194	165	5905-159-6543	68	6
5905-126-6683	194	203	5905-159-6544	68	6
5905-126-6690	204A	17	5905-159-6546	68	6
5905-126-6690	204A	18	5905-159-6547	68	6
5905-126-6710	204A	18	5905-159-6550	68	6
5905-131-1255	194	168	5905-159-6551	68	8
5905-131-9729	194	101	5905-160-3564	68	6
5905-131-9729	204A	71	5905-160-3565	68	6
5905-132-7399	204A	28	5905-160-3566	68	6
5905-133-0392	204A	18	5905-160-3567	68	6
5905-135-3973	194	121	5905-160-3568	68	6
5905-135-3973	194	85	5905-160-3569	68	6
5905-136-3890	204A	17	5905-160-3570	68	6
5905-136-3890	204A	18	5905-160-3571	68	6
5905-136-3891	204A	95	5905-160-3572	68	6
5905-136-7103	204A	17	5905-161-3030	68	6
5905-136-7103	204A	18	5905-161-3031	68	6
5905-136-7104	204A	17	5905-161-3032	68	6
5905-136-7104	204A	18	5905-165-2480	68	6
5905-136-8430	204A	17	5905-165-3103	194	142
5905-136-8430	204A	18	5905-177-7177	8	
5905-136-8431	173	16	5905-177-7357	BULK	
5905-137-7942	194	132	5905-177-7486	189A	90
5905-137-7942	194	158	5905-180-8303	189	23
5905-138-3376	204A	29	5905-180-8303	189A	108
5905-138-7397	204A	19	5905-180-8303	189A	61
5905-138-7401	204A	93	5905-180-8314	189	24
5905-138-7531	204A	77	5905-184-7787	204A	31
5905-139-1920	204A	65	5905-184-7788	189A	76
5905-139-1926	204A	86	5905-195-6752	BULK	
5905-139-2368	204A	19	5905-195-6824	277	27
5905-141-0591	186	19	5905-197-0224	189A	95
5905-141-0595	BULK		5905-197-4110	204A	79
5905-141-0627	68	6	5905-223-2741	204A	50
5905-141-0717	194	163	5905-223-3029	68	6
5905-141-0717	204A	17	5905-226-1705	232	9
5905-141-0717	204A	18	5905-228-5506	204A	18
5905-141-0741	204A	17	5905-228-5816	68	6
5905-141-0741	204A	18	5905-232-3112	189A	98
5905-141-0743	194	152	5905-233-4531	204A	30
5905-141-0743	194	210	5905-233-4532	204A	19
5905-141-0744	194	107	5905-233-4593	68	6
5905-141-0744	194	171	5905-234-9823	68	6
5905-141-0744	204A	18	5905-234-9824	68	6
5905-141-1132	204A	18	5905-234-9825	68	6
5905-141-1183	194	116	5905-234-9826	68	6
5905-141-1183	194	179	5905-234-9827	68	6
5905-141-1183	194	84	5905-234-9828	68	6
5905-141-1183	204A	38	5905-235-3534	200	18
5905-141-1187	169	21	5905-236-0494	204A	19
5905-141-1295	204A	17	5905-236-0895	204A	78
5905-141-1295	204A	18	5905-240-2105	68	6
5905-141-1488	184	30	5905-242-2096	204A	48
5905-142-3320	193	81	5905-244-6934	204A	17
5905-151-4659	204A	91	5905-244-6934	204A	18
5905-159-6239	68	6	5905-244-6934	204A	57
5905-159-6245	68	6	5905-246-8690	204A	17
5905-159-6272	68	6	5905-246-8690	204A	18
5905-159-6501	68	6	5905-247-2078	204A	18
5905-159-6504	68	6	5905-247-7587	BULK	
5905-159-6505	68	6	5905-252-1671	169	34
5905-159-6508	68	6	5905-252-1672	204A	17
5905-159-6510	68	6	5905-252-1672	204A	18
5905-159-6513	68	6	5905-252-1673	204A	17

STOCK NUMBER	FIGURE NUMBER	ITEM NUMBER
5905-252-1673	204A	18
5905-253-1231	BULK	
5905-279-2596	BULK	
5905-299-0844	232	9
5905-369-6916	BULK	
5905-369-6932	204A	17
5905-369-6932	204A	18
5905-400-4528	194	146
5905-400-4528	204A	17
5905-400-4528	204A	18
5905-401-7435	204A	19
5905-403-3124	183A	22
5905-403-4447	204A	19
5905-403-4452	204A	47
5905-403-8837	189A	50
5905-407-0082	189A	94
5905-410-1577	204A	19
5905-412-0762	204A	96
5905-412-0763	189A	51
5905-412-3776	189A	100
5905-412-4048	204A	56
5905-413-1200	189A	106
5905-413-1200	189A	59
5905-422-4802	204A	19
5905-423-0331	204A	64
5905-425-8972	68	6
5905-426-8228	68	6
5905-426-8246	68	6
5905-426-8249	68	6
5905-429-9227	68	6
5905-429-9228	68	6
5905-429-9235	68	6
5905-431-3651	67A	9
5905-431-4894	68	6
5905-431-4899	68	6
5905-431-4916	68	6
5905-431-4917	68	6
5905-431-4918	68	6
5905-431-4919	68	6
5905-431-4920	68	6
5905-431-4921	68	6
5905-431-4922	68	6
5905-431-4923	68	6
5905-431-4924	68	6
5905-431-4925	68	6
5905-431-4926	68	6
5905-431-4927	68	6
5905-431-4928	68	6
5905-431-4929	68	6
5905-431-4930	68	6
5905-431-4931	68	6
5905-431-4932	68	6
5905-431-4933	68	6
5905-431-4934	68	6
5905-431-4935	68	6
5905-431-4936	68	6
5905-431-5156	204A	19
5905-431-7769	68	6
5905-431-7776	68	6
5905-431-7777	68	6
5905-431-7779	68	6
5905-432-0098	68	6
5905-432-0100	68	6
5905-432-0101	68	6
5905-435-1719	204A	17
5905-435-1719	204A	18
5905-435-6374	204A	17
5905-435-6374	204A	18
5905-435-6414	204A	17
5905-435-6414	204A	18
5905-436-8783	68	6
5905-438-0550	68	6
5905-438-9548	68	6
5905-446-5449	191	30
5905-446-5449	195	338
5905-451-2210	68	6
5905-454-2785	68	6
5905-454-2865	204A	18
5905-458-9346	189	20
5905-458-9346	189A	49
5905-458-9346	189A	97
5905-458-9347	189A	58
5905-462-5635	204A	49
5905-462-5721	189A	63
5905-466-1215	189A	105
5905-466-1218	189	29
5905-468-3019	204A	19
5905-468-3020	204A	70
5905-469-2253	194	124
5905-469-2253	194	177
5905-469-7358	189A	107
5905-470-1319	189A	53
5905-470-9481	189A	110
5905-470-9481	189A	74
5905-471-4441	189A	64
5905-476-6684	194	201
5905-476-6685	194	68
5905-476-6686	194	37
5905-476-6687	194	92
5905-476-6688	194	160
5905-476-6689	194	218
5905-476-6690	194	164
5905-476-6691	194	83
5905-476-6692	173	40
5905-476-6692	194	88
5905-476-6693	194	49
5905-476-6694	194	11
5905-476-6695	194	115
5905-476-6696	194	94
5905-477-9176	204A	43
5905-479-6658	189A	67
5905-479-9948	204A	20
5905-480-5193	204A	75
5905-480-6888	189A	60
5905-481-1110	204A	82
5905-481-1321	204A	19
5905-481-8454	204A	19
5905-481-8455	204A	19
5905-483-0416	189A	71
5905-483-0424	189A	78
5905-483-0430	189A	99
5905-483-3288	68	6
5905-485-4545	204A	17
5905-485-4545	204A	18
5905-485-4648	204A	17
5905-485-4648	204A	18
5905-491-1994	189A	102
5905-491-6344	189A	79
5905-492-7607	189	26
5905-492-7607	189A	103
5905-492-7607	189A	69
5905-494-4622	BULK	
5905-518-5595	204A	5
5905-564-9003	68	6
5905-617-5090	189A	47
5905-617-5090	189A	66
5905-617-5096	189	27
5905-660-6649	194	214
5905-681-5373	202	30
5905-682-1250	193	47
5905-686-3689	189A	64
5905-689-1290	189	30

STOCK NUMBER	FIGURE NUMBER	ITEM NUMBER
5905-689-6799	194	78
5905-715-1932	68	7
5905-721-3678	204A	19
5905-721-3683	204A	84
5905-730-3257	169	59
5905-755-8656	193	19
5905-758-4807	189	38
5905-758-5011	204A	19
5905-764-8914	194	77
5905-769-4309	183A	64
5905-783-5192	204A	19
5905-786-1728	204A	51
5905-788-0363	68	6
5905-808-5764	188	48
5905-811-1090	189A	64
5905-811-6728	193	13
5905-811-7893	193	81
5905-812-1609	183A	22
5905-821-9098	195	33F
5905-823-3569	189	38
5905-823-3708	204A	89
5905-828-2416	204A	46
5905-828-4061	184	
5905-833-4265	184	43
5905-833-5824	189A	64
5905-834-6635	189	32
5905-835-8537	68	6
5905-836-6662	68	6
5905-836-6925	68	6
5905-837-8621	196	36
5905-840-1326	196	35
5905-840-1326	200	15
5905-840-1843	68	6
5905-840-9635	194	89
5905-842-6863	189	37
5905-847-5872	193	26
5905-851-4383	200	16
5905-855-6140	204A	126
5905-856-4024	157	74
5905-856-4024	158	67
5905-856-4026	167	22
5905-856-6684	228	
5905-856-9620	200	14
5905-857-6123	184	32
5905-860-3372	188	
5905-860-3372	188	49
5905-862-9330	201	106
5905-862-9333	201	107
5905-862-9335	201	105
5905-862-9335	201	31
5905-862-9339	201	32
5905-862-9339	201	69
		70
5905-870-7908	68	6
5905-875-1532	68	6
5905-876-6806	68	6
5905-876-6809	68	6
5905-879-7998	176	36
5905-880-2285	68	6
5905-880-2913	204	
5905-880-4185	204A	62
5905-881-5722	169	63
5905-882-7721	207	34
5905-886-1883	193	12
5905-886-1884	193	21
5905-887-9724	68	6
5905-892-0009	210	96
5905-892-7189	188	37A
5905-892-7189	188	37B
5905-892-7189	188	37C
5905-893-7523	193	24
5905-895-3291	195	33A
5905-897-7320	193	76
5905-897-7320	194	33
5905-898-0670	68	6
5905-899-2639	184	40
5905-899-9974	204A	75
5905-900-0003	204A	65
5905-900-0774	68	6
5905-900-6676	204A	31
5905-900-9641	204A	86
5905-901-1962	248	85
5905-901-1992	248	86
5905-901-5273	228	93
5905-901-5273	228	93
5905-901-7060	68	6
5905-901-7946	68	6
5905-902-0343	204A	19
5905-902-0643	68	6
5905-902-1208	194	186
5905-903-7508	68	6
5905-903-7985	193	11
5905-903-8457	68	6
5905-904-0423	204A	19
5905-904-3744	68	6
5905-904-8504	189A	76
5905-905-1853	68	6
5905-905-2321	68	6
5905-905-3271	68	6
5905-905-4725	68	6
5905-905-7716	204A	85
5905-907-3866	228	78
5905-911-8831	184	20
5905-913-6323	204A	81
5905-913-6325	204A	82
5905-914-2152	189A	52
5905-915-1005	68	6
5905-919-4365	68	6
5905-921-0348	204A	96
5905-922-9756	204A	19
5905-923-3522	68	6
5905-923-3527	68	6
5905-923-8436	68	6
5905-924-3317	189A	108
5905-925-8737	68	6
5905-925-8738	68	6
5905-928-3909	157	70
5905-931-3893	68	6
5905-932-0065	68	6
5905-933-1393	186	20
5905-936-7552	204A	77
5905-938-7585	68	6
5905-942-6249	68	6
5905-944-9224	204A	19
5905-945-5161	204A	19
5905-948-2587	68	6
5905-948-2589	68	6
5905-949-9991	68	6
5905-951-4108	68	6
5905-954-2355	204A	30
5905-954-2496	68	6
5905-957-2274	68	6
5905-959-6636	204A	19
5905-959-6637	204A	19
5905-959-6638	204A	19
5905-964-0394	204A	70
5905-964-0395	204A	19
5905-969-6884	191	
5905-969-6884	195	
5905-974-5595	204A	19
5905-974-5612	68	6
5905-975-1638	204A	19

STOCK NUMBER	FIGURE NUMBER	ITEM NUMBER
5905-975-1652	204A	19
5905-975-1653	204A	19
5905-975-1656	204A	19
5905-975-1808	204A	93
5905-975-1809	204A	64
5905-978-3520	68	6
5905-982-0194	204A	19
5905-982-0199	204A	19
5905-982-0200	204A	78
5905-982-0212	189A	51
5905-982-0213	204A	51
5905-982-0214	204A	79
5905-982-0466	204A	46
5905-982-0470	204A	19
5905-982-0470	204A	42
5905-982-0476	204A	43
5905-982-0926	204A	45
5905-982-0927	204A	56
5905-982-0930	204A	28
5905-982-0935	204A	19
5905-982-0936	204A	47
5905-982-0943	204A	19
5905-982-0944	204A	49
5905-982-3335	184	31
5905-982-6374	204A	76
5905-984-1466	204A	19
5905-984-1467	204A	19
5905-988-7435	68	6
5905-988-8051	187	38
5905-988-8051	187	44
5905-988-8051	187	50
5905-990-7987	188	48
5905-992-5341	204A	69
5905-992-5347	204A	19
5905-997-2182	194	78
5905-997-5234	204A	19
5905-997-8152	68	6
5905-997-8263	68	6
5905-997-8333	68	6
5910-005-2800	169	20
5910-005-2800	169	38
5910-005-2800	173	37
5910-007-2002	189A	46
5910-007-2003	192	38
5910-021-8075	192	
5910-021-8075	192	56
5910-060-1763	204A	63
5910-067-4413	192	34
5910-067-4413	189A	89
5910-068-3895	189A	75
5910-074-4425	173	18
5910-078-7849	192	
5910-104-5917	204A	53
5910-110-0409	173	19
5910-110-7322	194	184
5910-113-5276	189	21
5910-113-5276	189A	109
5910-113-5276	189A	56
5910-113-5445	189A	70
5910-113-9817	194	184
5910-115-3567	192	42
5910-119-3249	176	40
5910-134-9607	184	44
5910-136-3395	204A	60
5910-144-1890	30	43
5910-144-4381	194	108
5910-144-4381	194	112
5910-144-4381	194	147
5910-144-4381	204A	36
5910-144-4383	189	34
5910-150-4662	204A	37
5910-165-2894	194	91
5910-180-7871	189A	91
5910-189-4248	192	
5910-189-4248	192	56
5910-235-8607	189A	54
5910-240-1311	204A	
5910-254-8169	194	87
5910-400-4091	204A	67
5910-403-5093	192	42
5910-409-5275	204A	41
5910-410-1276	194	81
5910-454-2129	204A	83
5910-458-4465	173	33
5910-468-2783	194	190
5910-469-2247	194	150
5910-469-2248	194	144
5910-469-2249	194	67
5910-476-5588	194	109
5910-476-5590	194	36
5910-476-6677	194	191
5910-476-6679	194	20
5910-478-1243	194	6
5910-487-8072	169	42
5910-487-8072	173	41
5910-490-7922	189A	113
5910-490-7922	189A	57
5910-490-7924	189A	114
5910-490-7925	189A	65
5910-490-7926	189A	48
5910-498-5697	189A	29
5910-542-7387	169	19
5910-542-7387	173	21
5910-581-8883	193	25
5910-643-7830	192	94
5910-693-4589	189A	10
5910-717-0169	190	158
5910-763-6938	204A	41
5910-772-9151	193	13A
5910-784-0696	169	50
5910-784-0696	173	47
5910-784-5433	189	25
5910-814-7525	169	51
5910-814-7525	173	15
5910-814-7525	173	48
5910-820-0209	204A	26
5910-820-4297	173	35
5910-866-3153	173	14
5910-875-7101	210	76
5910-879-7217	210	68
5910-893-0233	204A	25
5910-893-6743	189A	115
5910-901-6547	189A	73
5910-917-5085	194	120
5910-917-5085	194	183
5910-917-5085	194	224
5910-921-4258	165	65
5910-925-3756	204A	27
5910-925-3756	204A	90
5910-934-2577	189A	101
5910-934-2577	189A	68
5910-934-2656	204A	58
5910-934-2659	204A	40
5910-934-2865	192	38
5910-934-2922	194	106
5910-936-1332	194	108
5910-936-1332	194	112
5910-936-1332	194	147
5910-936-1332	194	189
5910-936-1332	204A	36
5910-936-1334	194	113
5910-936-1334	194	131

STOCK NUMBER	FIGURE NUMBER	ITEM NUMBER
5910-936-1523	189	34
5910-936-3863	194	87
5910-954-3301	204A	44
5910-956-8983	204A	80
5910-978-7690	189	21
5910-978-7690	189A	109
5910-978-7690	189A	55
5915-055-6067	192	88
5915-078-7848	232	30
5915-089-5448	277	
5915-233-9284	67A	14
5915-308-2469	160	22
5915-504-6963	260	59
5915-553-7224	197	36
5915-571-3745	190	
5915-755-4181	192	16
5915-937-4440	275	
5920-199-3973	260	30
5920-280-4168	260	29
5920-850-4666	44	11A
5925-068-6735	196	58
5925-068-6736	209	24
5925-076-1551	198	1
5925-127-5806	198	1
5925-134-3887	209	25
5925-269-2178	198	6
5925-482-2257	199	11
5925-482-2257	209	4
5925-549-3905	BULK	
5925-681-4952	198	10
5925-681-4952	199	21
5925-681-4952	199	34
5925-681-4952	199	8
5925-681-4952	209	8
5925-682-4015	BULK	
5925-686-3297	196	63
5925-686-3297	198	18A
5925-686-3297	198	8
5925-686-3297	198	9
5925-686-3297	199	20
5925-686-3297	199	32
5925-686-3297	199	7
5925-686-3297	209	7
5925-686-3298	198	9A
5925-686-3298	199	
5925-686-3298	199	33
5925-686-3298	209	13
5925-686-3299	199	10
5925-686-3299	209	5
5925-686-3301	209	6
5925-805-2833	198	11
5925-805-2833	199	9
5925-805-2833	209	9
5925-808-9233	198	18
5925-808-9233	199	35
5925-808-9233	209	11
5925-820-6157	198	7
5925-879-9455	198	
5925-879-9455	198	4
5925-879-9455	198	5
5925-879-9455	209	10
5930-013-9136	226	40
5930-013-9564	234	20
5930-019-0367	225	29
5930-019-0369	225	26
5930-019-0370	225	28
5930-019-5496	248	109
5930-042-7034	201	96
5930-043-2715	226	45
5930-044-3511	201	12
5930-044-3511	201	94
5930-044-3518	187	12
5930-044-3518	187	5
5930-044-3518	188	38
5930-044-3518	196	5
5930-061-4926	167	7
5930-064-9216	205	41
5930-070-8091	BULK	
5930-073-8950	212	33
5930-075-0221	232	16
5930-091-9255	167	10
5930-105-5331	187	12
5930-105-5331	187	19
5930-105-5331	188	38
5930-105-5331	196	5
5930-106-7987	196	69
5930-118-8072	176	34
5930-126-6671	176	45
5930-134-5724	173	6
5930-134-9726	226	12
5930-134-9726	226	48
5930-135-2628	189	15
5930-139-5002	68	65
5930-141-9016	167	13
5930-177-3188	167	46
5930-179-4526	176	32
5930-349-9256	183A	59
5930-349-9257	183A	59
5930-400-4126	201	43
5930-410-5466	187	30
5930-443-5569	234	15
5930-443-5570	234	16
5930-482-9102	68	64
5930-482-9103	68	65
5930-501-1749	188	39
5930-503-3848	BULK	
5930-503-3883	76	115
5930-503-3883	270	16A
5930-503-3883	270	62
5930-504-6094	100	10
5930-504-6094	100	20
5930-504-9964	251	44
5930-536-0781	190	110
5930-536-0782	190	56
5930-536-0783	190	55
5930-538-5508	201	34
5930-581-7925	265	231
5930-581-7925	265	24
5930-581-7925	268	139A
5930-581-7925	268	156
5930-581-7925	268	64
5930-581-8123	201	93
5930-583-8613	201	19
5930-594-1089	30	36
5930-615-6731	187	21
5930-615-6731	187	27
5930-615-7882	BULK	
5930-621-6818	251	45
5930-636-2821	187	37
5930-636-3241	251	45
5930-646-4619	190	109
5930-646-4619	190	54
5930-655-1515	187	34
5930-655-1516	187	35
5930-655-4241	157	27
5930-655-4241	158	27
5930-655-4241	187	36
5930-655-4241	201	95
5930-655-4242	187	11
5930-655-4242	187	18
5930-655-4242	187	4
5930-655-4245	167	8

STOCK NUMBER	FIGURE NUMBER	ITEM NUMBER
5930-655-4248	201	73
5930-660-3946	BULK	
5930-660-3947	183	12
5930-660-3947	189	16
5930-660-3947	183A	77
5930-660-3951	201	46
5930-660-3952	201	85
5930-660-3954	187	27
5930-669-7477	251	43
5930-669-7695	251	19
5930-681-4727	201	23
5930-681-4727	201	35
5930-681-4727	201	74
5930-681-4727	201	75
5930-681-4727	201	9
5930-683-1522	201	33
5930-683-1522	201	48
5930-683-1522	201	98
5930-683-1625	204	16
5930-683-1626	201	18
5930-683-1628	33	34B
5930-683-1628	188	32
5930-683-1629	157	40
5930-683-1629	158	37
5930-683-1629	187	13
5930-683-1629	187	20
5930-683-1629	187	21
5930-683-1629	187	42
5930-683-1629	196	19
5930-683-1629	196	53
5930-683-1630	187	43
5930-683-1630	187	49
5930-683-1630	187	6
5930-683-1630	201	10
5930-683-1630	201	108
5930-683-1630	201	83
5930-683-1630	201	97
5930-683-1633	187	24
5930-683-2814	167	21
5930-683-2814	183	40
5930-683-2814	205	27
5930-683-2814	226	53
5930-683-5977	BULK	
5930-729-1662	265	163
5930-729-1662	265	169
5930-729-1662	265	230
5930-729-1662	265	25
5930-729-1662	268	68
5930-738-6883	226	46
5930-758-0208	226	44
5930-758-0334	226	42
5930-758-0335	226	43
5930-761-9546	226	56
5930-768-4086	265	16
5930-768-4086	265	180
5930-768-4086	268	142
5930-768-4086	268	83
5930-772-3920	183	41
5930-780-6445	225	20
5930-780-6463	226	55
5930-781-4000	225	24
5930-789-6024	201	12
5930-789-6024	201	94
5930-803-4570	169	13
5930-803-4570	173	9
5930-803-4570	192	79
5930-803-4570	232	15
5930-803-4570	234	35
5930-810-5942	117	71
5930-810-5942	129	148
5930-815-9112	167	8
5930-815-9112	201	14
5930-815-9908	30	16
5930-823-0962	200	
5930-823-2115	205	11
5930-823-2115	205	25
5930-826-9248	184	55
5930-837-4665	167	46
5930-840-3535	201	42
5930-840-3535	201	50
5930-843-2366	213	58
5930-843-2366	220	55
5930-843-2366	221	133
5930-843-2366	221	39
5930-843-2366	221	95
5930-844-8764	176	11
5930-844-8764	177	10
5930-844-8779	176	14
5930-844-8779	177	13
5930-847-2599	BULK	
5930-862-9329	201	87
5930-862-9331	201	13
5930-862-9358	201	41
5930-862-9359	196	53
5930-862-9359	201	62
5930-870-3964	167	45
5930-877-8196	176	4
5930-877-8196	177	3
5930-878-0345	45	31
5930-879-8401	176	23
5930-883-6604	176	15
5930-883-6604	177	14
5930-894-6612	167	34
5930-898-7312	192	78
5930-898-9789	248	109
5930-903-6161	201	21
5930-903-6161	201	76
5930-906-3477	201	61
5930-916-2645	187	25
5930-923-1451	167	38
5930-923-1451	176	
5930-923-2560	167	34
5930-923-2560	177	
5930-937-4178	BULK	
5930-939-8103	226	48
5930-946-1320	67A	21
5930-950-9145	275	
5930-955-2023	167	38
5930-961-1708	201	6
5930-961-7984	201	84
5930-967-3405	129	14
5930-972-3400	201	22
5930-980-9631	167	10
5930-987-8593	167	20
5930-987-8593	205	29
5930-988-0255	265	181
5930-988-0255	268	148
5930-995-0390	265	39
5930-995-0390	268	61
5930-999-4887	201	86
5935-013-9443	204	32
5935-013-9443	204	33
5935-013-9496	BULK	
5935-021-9405	BULK	
5935-027-0242	BULK	
5935-051-2589	BULK	
5935-051-5071	BULK	
5935-052-2970	BULK	
5935-052-6853	BULK	
5935-052-8392	204A	12
5935-060-2440	BULK	

[illegible]	FIGURE NUMBER	ITEM NUMBER	STOCK NUMBER	FIGURE NUMBER	ITEM NUMBER
5935-061-1747	BULK		5935-549-4690	204	26
5935-067-3363	BULK		5935-557-1770	BULK	
5935-068-1903	BULK		5935-557-1863	BULK	
5935-068-1940	BULK		5935-557-1973	BULK	
5935-068-1941	BULK		5935-578-3565	BULK	
5935-068-1954	BULK		5935-588-4042	BULK	
5935-068-2228	BULK		5935-646-6521	BULK	
5935-068-2233	204		5935-660-3720	62	
5935-068-2586	BULK		5935-660-3720	QC1	
5935-068-3315	BULK		5935-660-4296	BULK	
5935-069-0907	BULK		5935-660-5198	BULK	
5935-069-0914	BULK		5935-682-0536	BULK	
5935-069-3010	BULK		5935-682-7782	BULK	
5935-069-4272	BULK		5935-686-0447	207	13
5935-074-8729	BULK		5935-686-0447	208	16
5935-080-4192	BULK		5935-687-1135	BULK	
5935-080-3327	BULK		5935-716-6578	BULK	
5935-080-9072	62	86	5935-721-0488	BULK	
5935-080-9072	BULK		5935-721-0490	230	14A
5935-081-0896	BULK		5935-721-0490	230	15B
5935-087-1809	BULK		5935-721-0490	231	9
5935-087-6998	QC1	180	5935-721-0491	BULK	
5935-087-5998	196	16A	5935-721-0917	BULK	
5935-088-3985	BULK		5935-721-1081	BULK	
5935-089-2097	BULK		5935-725-1345	BULK	
5935-089-4487	BULK		5935-725-4153	BULK	
5935-105-5491	BULK		5935-725-4591	BULK	
5935-110-0748	BULK		5935-725-4638	BULK	
5935-113-9277	197	41	5935-725-8233	BULK	
5935-131-9923	216	33B	5935-725-9269	BULK	
5935-134-5693	BULK		5935-726-6691	182	
5935-136-3319	204A		5935-726-7077	194	65
5935-136-3319	204A	167	5935-726-7101	BULK	
5935-137-4671	BULK		5935-727-1970	BULK	
5935-177-2745	196		5935-728-3289	226	1
5935-189-6844	BULK		5935-728-7825	BULK	
5935-201-3857	204		5935-738-6379	BULK	
5935-201-8072	BULK		5935-752-2793	BULK	
5935-220-5330	191	26	5935-754-5490	232	1
5935-220-5330	195	10	5935-754-8711	BULK	
5935-225-8217	BULK		5935-755-2894	BULK	
5935-225-8219	BULK		5935-755-3752	196	33
5935-225-8628	204		5935-762-2415	BULK	
5935-225-8629	BULK		5935-765-5976	BULK	
5935-225-8649	BULK		5935-765-6056	BULK	
5935-225-8650	BULK		5935-775-3009	BULK	
5935-225-8683	BULK		5935-777-6871	BULK	
5935-226-1741	BULK		5935-780-3064	BULK	
5935-240-0173	262	22	5935-781-1183	BULK	
5935-243-8575	68	4	5935-783-5382	BULK	
5935-258-4838	BULK		5935-783-5402	182A	38
5935-259-7410	BULK		5935-791-0640	BULK	
5935-280-2195	BULK		5935-800-9858	BULK	
5935-280-2206	BULK		5935-801-5096	BULK	
5935-280-2353	BULK		5935-801-6615	197	
5935-296-8004	BULK		5935-804-7227	193	29
5935-413-5394	182A	32	5935-805-4119	BULK	
5935-432-9340	204	32	5935-805-4120	BULK	
5935-432-9340	204	33	5935-805-4989	BULK	
5935-450-1141	204		5935-805-4991	BULK	
5935-456-9419	183A	3	5935-805-4995	BULK	
5935-478-1245	194	64	5935-807-7999	BULK	
5935-490-0124	BULK		5935-809-0913	BULK	
5935-490-0125	BULK		5935-809-7500	BULK	
5935-490-0126	BULK		5935-809-7506	BULK	
5935-490-3725	177	52	5935-809-7507	BULK	
5935-490-3725	186	25	5935-809-7986	BULK	
5935-490-4332	188		5935-810-6560	BULK	
5935-490-4333	188		5935-810-6733	BULK	
5935-502-0002	BULK		5935-810-9828	204	
5935-502-3768	260	42A	5935-812-1506	BULK	

STOCK NUMBER	FIGURE NUMBER	ITEM NUMBER
5935-812-2082	BULK	
5935-813-4716	BULK	
5935-813-4717	BULK	
5935-814-2994	BULK	
5935-814-2996	BULK	
5935-814-2997	BULK	
5935-814-2998	BULK	
5935-814-4618	BULK	
5935-814-4619	BULK	
5935-814-4620	BULK	
5935-814-4621	BULK	
5935-814-4622	BULK	
5935-814-4623	BULK	
5935-814-5199	BULK	
5935-814-6724	BULK	
5935-814-9780	BULK	
5935-814-9781	BULK	
5935-815-3378	BULK	
5935-815-5423	BULK	
5935-816-0999	52	3
5935-816-4802	BULK	
5935-818-6807	BULK	
5935-818-8581	202	35
5935-820-0555	BULK	
5935-821-5543	BULK	
5935-823-0126	BULK	
5935-823-0272	76	111
5935-823-0337	BULK	
5935-823-0652	62	78
5935-826-1013	BULK	
5935-826-1017	193	30
5935-826-1742	BULK	
5935-826-3698	BULK	
5935-827-1336	188	10
5935-827-1336	192	4
5935-827-1336	204	7
5935-827-1336	205	3
5935-827-1336	183A	2
5935-827-7167	BULK	
5935-835-0508	BULK	
5935-835-4339	BULK	
5935-836-1417	BULK	
5935-836-7666	210	79
5935-837-5966	BULK	
5935-838-8419	BULK	
5935-840-7083	62	86
5935-840-7083	204	
5935-840-7870	176	47
5935-841-5838	BULK	
5935-842-3100	BULK	
5935-843-2099	BULK	
5935-845-2891	BULK	
5935-846-2175	133	30
5935-846-2175	230	14
5935-846-2329	BULK	
5935-846-8101	BULK	
5935-847-1554	BULK	
5935-847-2600	BULK	
5935-847-2603	198	19
5935-847-2603	204	
5935-847-2603	204	31
5935-847-2603	209	17
5935-849-4268	BULK	
5935-850-1759	BULK	
5935-850-6522	124	3
5935-851-0221	BULK	
5935-851-0238	BULK	
5935-851-9080	BULK	
5935-852-9611	252	5
5935-853-3320	BULK	
5935-874-3431	BULK	
5935-877-5833	BULK	
5935-877-6735	BULK	
5935-878-1452	BULK	
5935-879-0236	BULK	
5935-879-1572	BULK	
5935-879-8479	204	
5935-879-8512	204	
5935-880-7894	BULK	
5935-881-1818	BULK	
5935-883-1977	232	1
5935-883-1977	248	4
5935-891-8475	BULK	
5935-894-9488	BULK	
5935-895-6387	248	14
5935-897-9834	BULK	
5935-900-9130	188	10
5935-901-0911	BULK	
5935-901-0923	BULK	
5935-901-3828	BULK	
5935-901-5782	215	50
5935-901-5782	265	19
5935-901-5782	268	71
5935-901-8030	BULK	
5935-901-8873	BULK	
5935-902-2363	BULK	
5935-902-2937	BULK	
5935-902-5364	BULK	
5935-906-0289	62	43
5935-906-0289	QC1	147
5935-912-9729	BULK	
5935-913-2172	BULK	
5935-922-0740	182	
5935-926-0680	204A	9
5935-926-7460	BULK	
5935-927-2918	173	55
5935-929-9957	189A	39
5935-929-9957	189A	83
5935-935-2116	169	66
5935-936-8091	BULK	
5935-941-7808	204A	8
5935-947-3502	BULK	
5935-950-5633	BULK	
5935-952-8259	BULK	
5935-957-1665	BULK	
5935-960-0011	230	17B
5935-960-0011	231	12
5935-965-7034	BULK	
5935-965-8984	BULK	
5935-967-3625	182	
5935-972-5475	BULK	
5935-976-2598	204	23
5935-984-8916	BULK	
5935-985-0434	BULK	
5935-985-0439	BULK	
5935-985-0444	BULK	
5935-988-3539	BULK	
5935-988-3540	BULK	
5935-988-4350	225	1
5935-988-8488	BULK	
5935-989-1962	182A	35
5935-990-1481	189A	7
5935-990-4557	189	1
5935-990-4557	194	66
5935-995-5782	122	3
5935-995-5782	146	1
5940-055-3001	191	
5940-058-4545	204	
5940-058-4545	275	
5940-058-4545	275	

STOCK NUMBER	FIGURE NUMBER	ITEM NUMBER
5940-058-4545	275	
5940-063-0829	BULK	
5940-082-4642	158	64
5940-082-4642	275	
5940-082-4642	277	
5940-082-4642	BULK	
5940-082-5023	BULK	
5940-113-8179	BULK	
5940-113-8183	BULK	
5940-113-8184	210	52
5940-113-8184	BULK	
5940-113-8190	BULK	
5940-113-9828	183	
5940-113-9828	194	58
5940-113-9828	BULK	
5940-114-1305	BULK	
5940-114-1306	BULK	
5940-115-2678	BULK	
5940-134-0760	188	
5940-143-4771	BULK	
5940-143-4774	190	10
5940-143-4774	210	17
5940-143-4774	BULK	
5940-143-4775	BULK	
5940-143-4777	BULK	
5940-143-4793	BULK	
5940-143-4794	197	
5940-143-5284	BULK	
5940-156-7340	192	23
5940-156-7431	176	43
5940-156-7431	177	48
5940-176-7368	BULK	
5940-176-7572	BULK	
5940-177-4281	BULK	
5940-177-4287	210	58
5940-199-3692	204A	112
5940-199-3692	204A	174
5940-204-7866	192	74
5940-204-8966	277	
5940-204-8966	BULK	
5940-204-8966	182A	41A
5940-204-8990	BULK	
5940-225-6449	204A	140
5940-229-7564	BULK	
5940-236-1572	BULK	
5940-244-1730	67A	11
5940-245-5934	203	22
5940-256-6364	183A	71
5940-256-6365	183A	71
5940-258-2106	68	13
5940-259-9057	165	67
5940-259-9057	165	76
5940-259-9057	173	53
5940-259-9057	173	8
5940-259-9057	176	13
5940-259-9057	176	21
5940-259-9057	177	12
5940-259-9057	177	20
5940-283-5280	BULK	
5940-283-5281	BULK	
5940-345-1276	196	
5940-345-1276	204	33F
5940-497-2111	183A	40
5940-500-8723	BULK	
5940-501-9401	204A	130
5940-502-1785	190	
5940-502-7570	BULK	
5940-502-8806	BULK	
5940-518-8522	216	28
5940-518-8522	216	33F
5940-549-6220	BULK	
5940-549-6703	BULK	
5940-553-2713	BULK	
5940-557-1629	210	51
5940-557-1629	BULK	
5940-557-4338	BULK	
5940-557-4344	BULK	
5940-557-4345	BULK	
5940-557-7653	BULK	
5940-557-7656	BULK	
5940-577-3807	210	101
5940-577-3807	BULK	
5940-577-3807	189A	23
5940-578-9896	192	14
5940-581-4328	BULK	
5940-581-4712	210	74
5940-600-6259	182	
5940-611-3944	BULK	
5940-615-6073	192	89
5940-617-2895	190	
5940-623-7228	157	83
5940-623-7228	158	66
5940-623-7228	275	
5940-636-7360	BULK	
5940-644-6889	190	
5940-666-2741	BULK	
5940-666-3601	BULK	
5940-681-1514	BULK	
5940-681-9718	BULK	
5940-682-2477	248	89
5940-682-8226	169	12
5940-682-8226	169	62
5940-686-5100	BULK	
5940-690-9961	210	72A
5940-729-7230	BULK	
5940-794-4457	193	67
5940-813-0698	197	
5940-813-0698	BULK	
5940-813-0698	BULK	
5940-840-0139	191	
5940-840-0139	277	
5940-841-4516	183	
5940-846-0931	183A	39
5940-847-3138	192	
5940-877-9111	BULK	
5940-892-3137	BULK	
5940-898-9865	182	
5940-907-5938	BULK	
5940-907-5939	158	65
5940-907-5939	BULK	
5940-932-6316	183A	72
5940-932-6316	204A	114
5940-932-6316	204A	139
5940-932-6316	204A	173
5940-938-3269	BULK	
5940-950-1610	182	
5940-950-1610	182	22
5940-950-1610	182	26
5940-950-1610	204	
5940-950-1610	277	18
5940-950-1610	277	20
5940-950-1610	277	21
5940-950-1610	BULK	
5940-950-7784	BULK	
5945-012-4734	202	37
5945-057-1868	204	
5945-057-8315	204	
5945-074-9056	188	8
5945-075-0220	182	31
5945-075-0220	200	21
5945-077-2493	196	
5945-089-2984	134	19

STOCK NUMBER	FIGURE NUMBER	ITEM NUMBER
5945-103-7566	210	85
5945-104-6805	196	
5945-132-0067	113	1
5945-136-7013	156	1
5945-141-9017	202	36
5945-180-8329	209	31
5945-215-4402	272	10
5945-225-8692	182	29
5945-225-8692	188	37
5945-225-8692	188	41
5945-225-8692	188	50
5945-225-8692	188	7
5945-225-8692	191	38
5945-225-8692	191	5
5945-225-8692	195	37
5945-225-8692	196	
5945-225-8692	204	
5945-225-8692	204	18
5945-225-8692	204	5
5945-225-8692	209	35
5945-225-8692	277	13
5945-225-8692	277	14
5945-232-5773	209	30
5945-263-2176	216	33D
5945-283-6538	188	36
5945-321-0871	198	26
5945-405-4691	182	
5945-431-7746	204A	123
5945-435-2633	204A	124
5945-453-8704	194	29
5945-469-2251	194	141
5945-469-2251	194	50
5945-478-1244	194	
5945-485-9791	64A	32
5945-543-8127	198	21
5945-571-4187	198	35
5945-593-6424	124	12
5945-593-6424	133	42
5945-644-9181	198	31
5945-644-9220	198	21
5945-660-9315	208	23
5945-681-9716	182	21
5945-681-9716	188	6
5945-681-9716	191	6
5945-681-9716	195	34
5945-681-9716	196	25
5945-681-9716	200	20
5945-681-9716	204	
5945-681-9716	204	3
5945-681-9716	209	34
5945-686-6870	200	17
5945-755-2301	207	25
5945-755-2301	208	23
5945-758-1969	198	37
5945-764-8878	272	10
5945-780-6060	152	2
5945-811-3881	182	
5945-817-7894	207	26
5945-817-7894	208	26
5945-862-3979	204	
5945-872-7919	198	38
5945-890-2820	272	61
5945-900-2098	196	27
5945-907-9681	196	29
5945-912-3025	196	
5945-913-0339	194	44
5945-923-3717	196	
5945-927-6991	194	74
5945-937-3263	196	
5945-937-3264	196	
5945-938-3260	186	10
5945-960-3750	190	2
5945-987-7541	198	36
5945-991-6957	198	34
5950-010-1396	122	20
5950-010-1396	122	36
5950-010-1396	130	24
5950-010-1398	146	12
5950-010-7890	146	16
5950-012-4732	122	23
5950-063-8501	177	17
5950-075-0332	122	39
5950-075-0332	130	26
5950-078-5623	192	9
5950-102-0310	210	33
5950-165-3544	194	187
5950-168-8999	204A	136
5950-242-2329	204A	121
5950-251-8757	189A	4
5950-256-0798	204A	120
5950-342-0374	210	16A
5950-476-5582	194	213
5950-476-5583	194	217
5950-476-5584	194	215
5950-581-5195	196	1
5950-581-5195	198	45
5950-590-4856	193	86
5950-590-4857	193	37
5950-590-4858	193	32
5950-739-7703	189	4
5950-775-9200	193	35
5950-824-1541	192	
5950-835-2755	193	31
5950-845-1256	192	46
5950-856-3137	198	47
5950-856-8139	198	41
5950-858-4840	210	64
5950-867-0958	132	10
5950-867-0958	146	15
5950-875-7102	210	47
5950-878-2963	198	46
5950-878-7583	169	30
5950-879-9294	176	18
5950-911-2707	184	39
5950-923-8241	189A	112
5950-926-3162	169	33
5950-926-3162	173	29
5950-942-7204	189A	92
5950-966-4469	231	
5961-011-9188	202	31
5961-050-7499	176	32A
5961-050-7499	177	34A
5961-054-0046	169	35
5961-054-0046	173	32
5961-075-2445	192	12
5961-085-7558	210	30
5961-086-9165	210	27
5961-087-6047	169	22
5961-087-6047	169	40
5961-087-6047	176	29A
5961-087-6047	176	32C
5961-087-6047	177	25A
5961-087-6047	177	31A
5961-087-6047	189	33
5961-087-6047	204A	34
5961-116-6553	194	118
5961-116-6553	194	82
5961-160-4883	194	90
5961-181-0638	194	138
5961-181-0638	194	216
5961-181-0638	194	69
5961-226-8579	189	28

STOCK NUMBER	FIGURE NUMBER	ITEM NUMBER	STOCK NUMBER	FIGURE NUMBER	ITEM NUMBER
5961-229-8323	204A	132	5961-949-1440	204A	162
5961-236-7940	204A	133	5961-949-1440	204A	99
5961-256-6329	204A	118	5961-949-5785	192	35
5961-347-9399	193	60	5961-949-6563	189A	81
5961-347-9399	209	33	5961-949-6563	204A	102
5961-410-3985	189A	43	5961-951-8757	204A	103
5961-410-3985	189A	88	5961-957-6865	192	40
5961-411-8483	193	14	5961-990-4605	194	82
5961-439-4030	173	39	5961-993-2502	189A	111
5961-455-8486	204A	100	5962-179-3260	204A	61
5961-455-8486	204A	163	5962-220-3072	204A	68
5961-474-9800	194	143	5970-045-1948	190	122
5961-474-9806	194	140	5970-056-4895	205	44
5961-476-5585	194	55	5970-088-6864	210	63
5961-476-5586	194	130	5970-160-5000	194	61
5961-476-5586	194	202	5970-160-5001	194	54
5961-476-5587	194	208	5970-161-7421	MSUP	
5961-476-6678	194	100	5970-165-3021	194	52
5961-476-6678	194	128	5970-181-0306	BULK	
5961-476-6678	194	161	5970-181-0340	182A	48
5961-476-6681	194	137	5970-181-0459	68	80
5961-476-6682	194	102	5970-185-0181	204A	131
5961-476-6682	194	135	5970-235-2725	BULK	
5961-476-6682	194	173	5970-235-2728	BULK	
5961-476-6682	194	206	5970-254-6685	182A	42
5961-476-6683	194	63	5970-285-0269	MSUP	
5961-476-9501	194	119	5970-285-0271	MSUP	
5961-477-2066	194	153	5970-285-0490	BULK	
5961-477-2066	194	166	5970-306-4634	160	53
5961-477-2066	194	197	5970-306-4634	160	61
5961-477-2066	194	95	5970-310-2346	190	171
5961-477-2067	194	117	5970-341-9933	30	4
5961-477-2067	194	162	5970-404-0982	182A	45
5961-477-2067	194	196	5970-417-5870	BULK	
5961-477-2067	194	223	5970-476-6768	194	62
5961-477-2067	194	80	5970-482-6297	204A	134
5961-478-1792	194	129	5970-519-8704	182A	48
5961-478-1793	194	181	5970-524-6759	275	23
5961-489-7400	204A	106	5970-524-6759	BULK	
5961-495-0929	194	199	5970-543-1154	BULK	
5961-503-6097	194	110	5970-548-9520	MSUP	
5961-503-6097	194	154	5970-557-6247	115	49
5961-577-6214	184	38	5970-581-0696	268	
5961-723-3602	194	148	5970-631-1439	BULK	
5961-723-3602	194	212	5970-780-6469	210	53
5961-726-7836	192	58	5970-798-9090	190	111
5961-758-4938	194	35	5970-799-6225	190	165
5961-761-3860	204A	105	5970-805-8041	193	58
5961-761-3860	204A	160	5970-807-0698	193	66
5961-810-3955	186	21	5970-807-1992	193	65
5961-813-9360	204A	98	5970-811-9461	BULK	
5961-814-8458	193	15	5970-812-2108	BULK	
5961-816-1605	204		5970-815-1300	BULK	
5961-821-2309	194	198	5970-818-6816	BULK	
5961-850-8449	193	61	5970-825-3678	BULK	
5961-850-9435	182A	44	5970-837-0648	BULK	
5961-850-9440	184	35	5970-892-9535	68	16
5961-852-7549	204A	33	5970-895-7579	192	81
5961-853-2601	189A	42	5970-895-7579	232	19
5961-855-1551	189A	104	5970-926-2550	204	
5961-855-1551	189A	80	5970-935-0027	BULK	
5961-855-2786	189	35	5970-935-0098	BULK	
5961-855-2786	189A	45	5970-963-6321	277	
5961-877-7663	192	20	5970-964-8708	204	
5961-879-7559	193	68	5970-964-8708	BULK	
5961-924-9029	189A	86	5970-988-1581	BULK	
5961-925-3777	204A	104	5975-015-0052	74	78
5961-925-3777	204A	161	5975-015-7822	226	39
			5975-074-2072	222	156
5961-935-0138	192	22	5975-074-2072	222	43
5961-949-1432	176	328	5975-074-2072	244	308

STOCK NUMBER	FIGURE NUMBER	ITEM NUMBER	STOCK NUMBER	FIGURE NUMBER	ITEM NUMBER
5975-074-2072	BULK		5999-454-8800	188	66
5975-074-2072	KITS				
5975-165-3317	183A	38	5999-473-5597	228	129
5975-215-4403	260	36	5999-643-8162	182A	31
5975-231-5898	BULK		5999-661-0416	201	
5975-240-4267	BULK		5999-661-0416	BULK	
5975-250-6871	275		5999-729-1628	BULK	
5975-250-6871	KITS		5999-758-1996	194	219
5975-280-4313	BULK		5999-799-5639	192	21
5975-553-6995	189A	22	5999-799-5639	192	35A
5975-553-7077	KITS		5999-799-5639	192	59
5975-553-7151	BULK		5999-827-6468	182	62
5975-701-5265	221	6	5999-827-6468	187	26
5975-701-5265	273	18F	5999-892-8156	BULK	
5975-863-3860	196	22	5999-901-3237	BULK	
5975-984-6582	BULK		5999-901-3238	BULK	
5977-238-6852	190	173	5999-901-3239	BULK	
5977-242-1311	215	45	5999-936-7747	210	44
5977-242-4465	67A	75	5999-988-5414	BULK	
5977-308-2488	160	84A	6105-011-8083	192	108
5977-454-9051	192	113	6105-075-2487	192	120
5977-503-2300	30	31			
5977-556-0787	216	78	6105-226-1827	190	
5977-588-7796	262B	14	6105-226-1827	190	60
5977-678-5507	248	123	6105-226-1828	190	
5977-698-2057	30	34	6105-226-1828	190	98
5977-800-2991	165	82	6105-244-1729	67A	72
5977-857-2932	197	49	6105-245-1823	190A	
5977-874-5644	192	112	6105-247-7228	190A	32
5977-874-5644	233	22	6105-251-2493	190A	16
5977-874-5646	192	114	6105-251-2494	190A	9
5977-874-5646	233	24	6105-254-6580	190A	18
5977-891-5152	262B	13	6105-307-5900	30	5
5977-950-6612	192	111	6105-307-5901	30	9
5977-950-6612	233	23	6105-307-5902	30	7
5977-969-1391	83	35J	6105-307-5903	30	6
5985-504-7200	275	25	6105-431-3678	67A	73
5985-504-7200	BULK		6105-510-2514	30	20
5985-524-6789	275	24	6105-519-2483	197	30
5985-524-6789	BULK		6105-557-7114	216	68
5990-189-6649	68	66	6105-564-8068	67A	74
5990-431-5458	183A	60	6105-608-4260	216	65
5990-482-2536	68	83	6105-617-1607	248	113
5990-757-7189	A31	3	6105-669-5482	216	82
5990-799-1918	165	60	6105-669-6434	29	6
5995-865-8193	16		6105-669-6434	30	
5995-999-8926	275	18	6105-670-2626	248	117
5999-065-2809	173	42	6105-685-0085	230	38
5999-067-8663	BULK		6105-703-0960	160	58
5999-069-7618	192	60	6105-730-3928	169	29
5999-075-0177	232	12	6105-730-3928	173	24
5999-078-6804	BULK		6105-782-8229	215	59
5999-078-6804	204A		6105-805-5802	169	24
5999-104-6760	188	66	6105-806-8827	216	
5999-133-8891	176	28	6105-806-8827	216	38
5999-133-8892	176	9	6105-813-9224	210	100
5999-133-8892	177	8	6105-851-5396	248	118
5999-133-8893	176	6			
5999-133-8893	177	5	6105-851-5411	248	124
5999-134-5791	197A	3	6105-862-5788	30	23
5999-138-8690	194	192	6105-867-9025	215	43
5999-226-4703	228	129	6105-867-9026	215	
5999-226-4703	182A	35	6105-868-1093	215	
5999-226-4703	182A	38	6105-883-0827	212	23
5999-226-4703	204A		6105-883-0828	212	32
5999-267-9389	BULK		6105-891-1338	248	
5999-308-2485	160	59	6105-891-1338	248	34
5999-404-9251	204A	61	6105-891-1379	248	126
5999-404-9251	204A	68	6105-902-4498	248	119
5999-443-1110	188	66	6105-902-4513	248	115
5999-443-1111	188	66	6105-902-4523	248	125

STOCK NUMBER	FIGURE NUMBER	ITEM NUMBER
6105-909-1943	252	10
6105-912-5847	216	
6105-912-5847	216	38
6105-951-7528	233	27
6105-955-1105	232	50
6105-955-1105	233	
6105-955-9391	232	50
6105-955-9391	233	
6105-967-7744	216	
6105-967-7744	KITS	
6105-976-1757	216	68
6105-980-1929	262A	9
6105-980-1929	262B	
6110-068-6537	195	43
6110-068-6537	195	8
6110-126-3780	BULK	
6110-134-6650	200	7A
6110-134-6650	201	45
6110-141-8024	202	
6110-156-6438	197A	1
6110-330-3058	193	90
6110-330-3149	193	36
6110-330-3272	193	34
6110-330-3274	193	33
6110-330-3278	193	72
6110-346-5616	193	27
6110-346-6690	193	5
6110-346-7903	193	44
6110-346-7905	193	17
6110-346-7958	193	10
6110-346-9701	193	20
6110-346-9702	193	22
6110-346-9703	193	53
6110-347-3994	193	28
6110-347-4078	193	38
6110-347-4516	193	48
6110-347-9372	193	23
6110-678-8507	182	33
6110-777-0092	191	40
6110-777-0092	191	8
6110-777-0092	195	25
6110-777-0092	195	51
6110-834-1419	182	24
6110-834-1420	200	5
6110-834-1420	201	17
6110-834-1422	200	9A
6110-834-1422	201	66
6110-838-0453	191	37
6110-838-0453	191	4
6110-838-0453	195	29
6110-838-0453	195	52
6110-865-3116	199	
6110-865-3116	200	2
6110-865-3146	199	
6110-865-3146	200	3
6110-865-3168	199	
6110-865-3168	200	1
6110-890-6020	191	11
6110-890-6020	191	43
6110-890-6020	195	42
6110-890-6020	195	7
6110-920-8411	204	22
6110-932-3630	191	40
6110-932-3630	191	8
6110-932-3630	193	
6110-932-3630	195	25
6110-932-3630	195	51
6110-941-3788	199	
6110-941-3788	200	1
6110-945-8692	182	46
6110-945-8692	182	63
6110-945-8692	187	22
6110-967-3412	270	31
6115-022-9566	267	
6115-111-6828	83	35
6115-316-0410	193	64
6115-635-3135	83	35C
6115-719-5104	83	35G
6115-774-5455	83	35M
6115-789-1536	83	35
6115-969-1395	83	35P
6130-059-3404	207	
6130-059-3404	207	30
6130-059-3404	207	35
6130-059-3404	208	36
6130-059-3404	210	
6130-689-6314	210	87
6130-689-6315	210	3
6130-701-0029	210	6
6130-858-0890	210	104
6130-922-0719	188	70
6130-922-0720	188	72
6130-973-3007	207	30
6130-973-3007	207	35
6130-973-3007	208	36
6135-738-5914	197A	6
6135-782-6893	159	1
6135-782-6893	173	1
6140-308-1315	207	20
6140-308-1315	207	23
6140-308-1315	207	4
6140-308-1315	208	13
6140-321-2281	207	15
6140-321-2281	208	17
6140-321-2281	KITS	
6140-533-2848	207	5
6140-533-2848	208	1
6140-753-2249	207	14
6140-753-2249	208	15
6140-976-9392	207	6
6140-976-9392	208	2
6145-161-0913	BULK	
6145-191-1526	BULK	
6145-191-1529	BULK	
6145-191-3224	BULK	
6145-236-9503	BULK	
6145-284-0657	BULK	
6145-500-0189	BULK	
6145-542-6092	BULK	
6145-548-1237	BULK	
6145-578-6594	BULK	
6145-578-6595	BULK	
6145-578-6596	BULK	
6145-578-6602	BULK	
6145-578-6604	BULK	
6145-578-6605	BULK	
6145-578-6606	BULK	
6145-578-7513	BULK	
6145-578-7514	BULK	
6145-578-7517	BULK	
6145-578-7519	BULK	
6145-578-7520	BULK	
6145-578-7521	BULK	
6145-590-8642	182	
6145-617-0858	BULK	
6145-617-0859	BULK	
6145-635-3595	BULK	
6145-635-3624	BULK	
6145-635-3626	BULK	
6145-643-0646	BULK	
6145-655-2562	BULK	
6145-660-8711	BULK	

STOCK NUMBER	FIGURE NUMBER	ITEM NUMBER
6145-661-0191	BULK	
6145-681-7849	BULK	
6145-689-7447	BULK	
6145-725-9360	BULK	
6145-810-9301	BULK	
6145-819-0058	BULK	
6145-819-0061	BULK	
6145-845-5203	BULK	
6145-851-8505	BULK	
6145-901-6840	BULK	
6145-901-6843	BULK	
6145-917-6379	BULK	
6145-931-2270	BULK	
6145-998-7609	BULK	
6150-828-3122	269	2
6150-849-7861	199	16
6150-849-7861	199	29
6150-849-7861	199	3
6150-849-7862	199	
6150-849-7862	199	27
6150-851-6539	198	3
6150-851-6542	209	3
6150-856-1424	199	17
6150-856-1424	199	4
6150-906-3568	15	
6150-910-7512	45	
6150-954-5131	207	38
6150-954-5131	208	44
6150-955-5549	275	
6150-990-3096	215	45A
6150-996-2186	198	33
6210-089-5188	188	65
6210-089-5188	196	3C
6210-089-5188	204	33C
6210-089-5188	197A	
6210-089-9285	182A	18
6210-151-5203	182A	16
6210-151-5204	182A	16
6210-151-5205	182A	16
6210-151-5206	182A	16
6210-151-5210	182A	16
6210-151-5211	182A	16
6210-183-0723	182A	16
6210-194-3029	182A	16
6210-284-0289	167	49
6210-284-0289	201	49
6210-299-6656	157	63
6210-299-6656	158	61
6210-299-6656	167	2
6210-299-6656	182	
6210-299-6656	182	
6210-299-6656	187	16
6210-299-6656	187	23
6210-299-6656	187	29
6210-299-6656	187	3
6210-299-6656	187	39
6210-299-6656	187	45
6210-299-6656	187	51
6210-299-6656	187	9
6210-299-6656	199	18
6210-299-6656	199	30
6210-299-6656	199	5
6210-299-6656	201	103
6210-299-6656	201	20
6210-299-6656	201	29
6210-299-6656	201	39
6210-299-6656	201	4
6210-299-6656	201	47
6210-299-6656	201	56
6210-299-6656	201	67
6210-299-6656	201	81
6210-299-6656	201	91
6210-299-6656	183A	75
6210-408-2715	182A	16
6210-408-2716	182A	16
6210-408-2719	182A	16
6210-408-2724	182A	16
6210-408-2727	182A	16
6210-408-2728	182A	16
6210-409-8279	182A	16
6210-433-2509	182A	16
6210-433-2510	182A	16
6210-433-2511	182A	16
6210-433-2512	182A	16
6210-433-2513	182A	16
6210-433-2514	182A	16
6210-433-2515	182A	16
6210-433-2516	182A	16
6210-433-2522	182A	16
6210-433-2523	182A	16
6210-433-2524	182A	16
6210-433-9290	182A	16
6210-504-0167	157	7
6210-504-0167	158	7
6210-519-0448	201	58
6210-519-0448	201	7
6210-538-8770	157	43
6210-538-8770	158	39
6210-538-8770	167	48
6210-542-6393	BULK	
6210-553-1076	167	51
6210-553-1076	201	8
6210-553-8698	157	7
6210-553-8698	158	7
6210-553-8698	167	42
6210-553-8698	182	
6210-553-8698	201	55
6210-573-5742	157	14
6210-573-5742	158	15
6210-635-4700	167	52
6210-635-4700	196	
6210-683-0806	157	5
6210-683-0806	158	5
6210-702-3464	188	30
6210-702-3464	196	50
6210-702-3464	196	54
6210-782-5606	196	
6210-807-3162	157	41
6210-807-3162	158	38
6210-862-4204	182A	16
6210-880-1643	182A	15
6210-910-1574	182	
6210-910-1575	182	
6210-910-1576	182	
6210-925-7098	184	58
6210-926-1328	184	58
6210-990-9738	202	8
6210-990-9740	202	21A
6220-015-7811	190	64
6220-017-2633	190	92
6220-017-2636	190	
6220-017-2636	190	41
6220-017-2637	190	
6220-017-2641	190	157
6220-017-2642	190	157
6220-017-2644	190	43
6220-017-2645	190	9
6220-018-0047	190	106
6220-019-0294	202	1
6220-019-0297	202	16
6220-019-0298	202	17
6220-019-0299	202	18

STOCK NUMBER	FIGURE NUMBER	ITEM NUMBER
6220-019-0300	202	21
6220-019-0301	182	
6220-019-0301	202	11
6220-019-0301	202	8
6220-019-0301	202	8A
6220-019-0301	202	8B
6220-019-0301	202	8C
6220-019-0303	202	3
6220-019-0304	202	20
6220-019-0305	202	19
6220-019-0306	202	4
6220-019-0307	202	5
6220-019-0308	202	6
6220-019-0309	202	14
6220-019-0311	202	9
6220-019-0312	202	15
6220-019-0325	202	10
6220-055-2925	157	25
6220-055-2925	158	58
6220-066-9575	190	
6220-133-7705	188	
6220-133-7705	196	
6220-133-7705	204	
6220-141-6150	197	3
6220-151-7538	204	
6220-151-7539	204	
6220-179-2653	188	
6220-179-2653	196	
6220-179-2653	204	
6220-194-2989	182A	17
6220-283-9335	204	
6220-283-9732	188	
6220-283-9732	196	
6220-283-9732	204	
6220-295-0897	188	13
6220-295-2119	33	
6220-299-7136	188	29
6220-299-7136	196	42
6220-299-7136	204	30
6220-299-7166	188	26
6220-326-5587	190	71
6220-326-5588	190	131
6220-326-5590	190	152
6220-326-5591	190	68A
6220-326-5596	190	24
6220-446-2889	190	74
6220-448-9597	190	140
6220-448-9597	190	23
6220-502-0746	190	121
6220-506-1301	190	15
6220-520-2600	190	105A
6220-520-2603	190	37A
6220-523-9406	190	135
6220-524-6444	190	17
6220-606-6117	197	23
6220-657-2077	197	
6220-657-2098	197	
6220-722-3868	196	
6220-758-9766	182	60
6220-758-9766	182	7
6220-758-9766	202	
6220-761-9520	197	31
6220-780-6456	190	8
6220-797-1533	197	34
6220-830-4685	190	49
6220-830-4687	190	90
6220-830-4688	190	77
6220-851-9036	196	
6220-851-9037	204	33E
6220-858-0923	197	58
6220-874-7048	188	46
6220-874-7048	196	12
6220-875-1439	188	45
6220-875-1439	196	11
6220-895-7213	197	59
6220-918-1888	202	13
6220-930-8338	190	94
6220-941-3988	202	8C
6220-941-4007	202	8B
6220-943-7834	182A	14
6220-966-7528	33	34G
6220-977-5660	157	49
6220-977-5660	158	44
6220-980-7291	190	125
6220-980-7292	190	115
6220-980-7293	190	114
6220-980-7294	190	126
6220-980-7295	190	57
6220-980-7296	190	53
6220-980-7297	190	52
6220-981-1294	188	22
6220-981-1294	190	
6220-981-1295	196	66
6220-981-1295	197	
6220-981-1295	204	27
6220-995-2830	196	67
6230-427-4175	149	55
6230-496-8630	197A	9
6230-497-9957	197A	8
6240-044-6914	196	
6240-155-7784	33	34H
6240-155-7784	188	
6240-155-7784	188	18C
6240-155-7784	196	
6240-155-7784	204	
6240-155-7786	188	
6240-155-7786	196	
6240-155-7786	204	
6240-155-7786	197A	5
6240-155-7836	157	15
6240-155-7836	157	18
6240-155-7836	157	24
6240-155-7836	157	33
6240-155-7836	157	44
6240-155-7836	157	50
6240-155-7836	157	56
6240-155-7836	157	6
6240-155-7836	157	62
6240-155-7836	157	64
6240-155-7836	158	16
6240-155-7836	158	26
6240-155-7836	158	33
6240-155-7836	158	39
6240-155-7836	158	45
6240-155-7836	158	51
6240-155-7836	158	57
6240-155-7836	158	6

STOCK NUMBER	FIGURE NUMBER	ITEM NUMBER	STOCK NUMBER	FIGURE NUMBER	ITEM NUMBER
6240-155-7836	158	60	6605-487-4769	278	15
6240-155-7836	167	15	6605-551-8187	188	57
6240-155-7836	167	3	6605-684-5786	63	115
6240-155-7836	182		6605-684-5786	138	59
6240-155-7836	183	4	6605-727-4853	182	11
6240-155-7836	184	58	6605-727-4853	185	
6240-155-7836	187	16	6605-727-4860	185	
6240-155-7836	187	23	6605-727-4870	185	14
6240-155-7836	187	29	6605-925-2993	204A	107
6240-155-7836	187	3	6605-943-0843	182	11
6240-155-7836	187	39	6605-943-0843	185	
6240-155-7836	187	45	6610-010-0467	170	20
6240-155-7836	187	51	6610-010-0467	171	22
6240-155-7836	187	9	6610-012-4624	157	51
6240-155-7836	188		6610-012-4624	158	46
6240-155-7836	188	18A	6610-021-2769	180	40
6240-155-7836	196		6610-026-4383	170	75
6240-155-7836	199		6610-026-4383	171	56
6240-155-7836	199	18	6610-035-5798	165	48
6240-155-7836	199	30	6610-049-3994	160	55
6240-155-7836	201	103	6610-049-5002	170	93
6240-155-7836	201	20	6610-049-5002	171	67
6240-155-7836	201	29	6610-049-5103	170	21
6240-155-7836	201	39	6610-049-5103	171	23
6240-155-7836	201	4	6610-059-6355	180	38
6240-155-7836	201	47	6610-070-6739	167	28
6240-155-7836	201	56	6610-070-6775	222	
6240-155-7836	201	58	6610-086-3574	157	37
6240-155-7836	201	67	6610-086-3574	158	34
6240-155-7836	201	8	6610-103-9530	167	28
6240-155-7836	201	81	6610-133-7749	157	19
6240-155-7836	201	91	6610-133-7749	158	21
6240-155-7836	202	2	6610-180-8915	171	44
6240-155-7836	203	30	6610-181-5354	170	38
6240-155-7836	204		6610-181-5354	171	40
6240-155-7836	182A	19	6610-181-5369	170	29
6240-155-7836	197A	4	6610-181-5369	171	31
6240-155-7932	188		6610-181-5415	170	36
6240-155-7932	188	18B	6610-181-5415	171	38
6240-155-7932	196		6610-181-5684	170	30A
6240-155-7932	204		6610-181-5684	171	32A
6240-155-8714	157	42	6610-251-0366	157	57
6240-155-8714	158	38	6610-251-0366	158	52
6240-155-8714	188	18D	6610-308-2487	160	1
6240-155-8714	188	26A	6610-308-2491	160	
6240-295-1617	157	8	6610-308-2492	160	9
6240-295-1617	158	8	6610-308-2493	160	19
6240-295-1617	167	43	6610-308-2494	160	21
6240-295-1617	182		6610-308-2495	160	20
6240-295-1617	188	18	6610-308-2496	160	42A
6240-295-1617	201	55	6610-308-2497	160	
6240-299-4742	188		6610-308-2498	160	2
6240-299-4742	188	18D	6610-308-2500	160	38
6240-299-4742	188	31	6610-308-2501	160	41
6240-299-4742	196		6610-308-2502	160	25
6240-557-3065	188		6610-329-0856	170	19
6240-557-3065	190	20	6610-329-0856	171	21
6240-564-1084	197	67	6610-334-6861	170	40
6240-681-8366	204		6610-334-6861	171	42
6240-763-7744	201	49	6610-337-9874	157	9A
6240-781-9899	176	10	6610-337-9874	158	10
6240-781-9899	177	9	6610-388-0030	157	57
6340-686-5137	259	16	6610-388-0030	158	52
6340-910-3862	182	8	6610-403-7051	189A	32
6350-500-3150	188	44	6610-415-6410	178	12
6350-500-3150	196	9	6610-443-8910	170	22
6515-890-1803	BULK		6610-443-8910	171	24
6545-919-6650	34	26	6610-514-4183	157	57
6545-919-6650	34	6	6610-514-4183	158	52
6605-235-4590	182	11	6610-515-6386	157	57
6605-235-4590	185		6610-515-6386	158	52

STOCK NUMBER	FIGURE NUMBER	ITEM NUMBER	STOCK NUMBER	FIGURE NUMBER	ITEM NUMBER
6610-526-4397	158	21	6610-757-7147	226	
6610-526-4702	158	10	6610-772-7857	157	57
6610-526-4702	165		6610-772-7857	158	52
6610-526-6054	157	57	6610-774-5656	157	57
6610-526-6054	158	52	6610-774-5656	158	52
6610-526-6067	157	57	6610-777-9732	157	57
6610-526-6067	158	52	6610-777-9732	158	52
6610-526-6081	157	57	6610-805-4164	157	57
6610-526-6081	158	52	6610-805-5811	157	9
6610-526-6083	157	57	6610-805-5811	158	10
6610-526-6083	158	52	6610-826-7235	178	101
6610-526-6090	157	57	6610-826-7235	178	66
6610-526-6090	158	52	6610-869-6961	167	28
6610-526-6090	171		6610-878-4634	157	57
6610-526-6091	157	57	6610-878-4634	158	52
6610-526-6091	158	52	6610-879-2788	157	57
6610-526-6091	170		6610-879-2788	158	52
6610-526-6092	157	57	6610-880-1591	157	57
6610-526-6092	158	52	6610-880-1591	158	52
6610-526-6093	157	57	6610-893-0893	157	51
6610-526-6093	158	52	6610-893-0893	158	46
6610-526-8276	157	57	6610-903-0714	157	51
6610-526-8276	158	52	6610-903-0714	158	46
6610-526-8278	157	57	6610-927-7415	170	76A
6610-526-8278	158	52	6610-933-1379	160	57
6610-526-8278	171		6610-933-1380	160	5
6610-531-5387	158	10	6610-935-4323	157	57
6610-531-5387	160		6610-935-4323	158	52
6610-536-1437	170	15	6610-952-8832	157	51
6610-536-1437	171	17	6610-952-8832	158	46
6610-536-1438	170	76	6610-963-5783	157	57
6610-536-1441	170	79	6610-963-5783	158	52
6610-536-1442	170	87A	6610-965-9840	157	37
6610-536-1446	170	94	6610-965-9840	158	34
6610-536-4881	170	20	6610-987-9716	157	51
6610-536-4881	171	22	6610-987-9716	158	46
6610-544-8345	170	49	6615-019-5422	192	3A
6610-544-8345	171	49	6615-404-7655	228	146
6610-557-0900	157	9	6615-558-8068	170	53
6610-557-3170	158	21	6615-558-8068	171	53
6610-557-3183	157	57	6615-572-5879	160	85
6610-557-3183	158	52	6615-573-6515	228	128
6610-557-3404	157	57	6615-663-8696	278	16
6610-557-3404	158	52	6615-938-0136	204A	101
6610-557-3405	157	57	6615-938-0136	204A	164
6610-557-3405	158	52			
6610-567-5049	170	44	6620-019-0276	272	3
6610-570-5360	179	15	6620-065-5489	162	36
6610-570-5360	179	31	6620-065-5489	162	39
6610-611-8635	160	7	6620-065-5493	162	13
6610-620-9491	170	55	6620-065-5494	162	19
6610-620-9491	171	58	6620-065-5495	162	17
6610-621-5835	170	73	6620-076-7307	162	34
6610-633-2461	170	58	6620-166-5503	157	
6610-633-4229	170	66	6620-166-5503	158	
6610-649-8380	157	57	6620-176-0168	157	
6610-649-8380	158	52	6620-176-0168	158	
6610-649-8380	170		6620-485-9714	157	3
6610-656-3708	170	59	6620-485-9714	158	3
6610-656-3708	171	61	6620-553-8986	62	5A
6610-691-0874	157	57	6620-557-0363	167	32
6610-691-0874	158	52	6620-557-3023	167	29
6610-691-1807	157	57	6620-557-3023	201	59
6610-691-1807	158	52	6620-585-1503	62	57
6610-703-6819	170	24	6620-585-1503	81	40
6610-703-6819	171	26	6620-585-1503	QC1	29
6610-703-8197	170	82	6620-585-1503	273	16
6610-722-0967	157	57	6620-759-8288	157	3
6610-722-0967	158	52	6620-759-8288	158	3
6610-752-8689	157	57	6620-793-0020	79	29
6610-752-8689	158	52	6620-842-6371	248	122

STOCK NUMBER	FIGURE NUMBER	ITEM NUMBER	STOCK NUMBER	FIGURE NUMBER	ITEM NUMBER
6620-843-5336	157	2	6680-069-8459	167	39
6620-843-5336	158	2	6680-133-7706	221A	6
6620-846-1667	157	3	6680-133-7708	221A	9
6620-846-1667	158	3	6680-133-7709	221A	12
6620-846-1667	162		6680-133-7710	221A	9
6620-910-8898	97	12	6680-133-7751	221A	12
6620-910-8898	97	18	6680-162-2041	218	48
6620-910-8898	97	8	6680-162-2041	221A	
6620-910-8898	98	8	6680-182-7609	95	10
6620-910-8898	99	8	6680-182-7609	95	146
6625-083-7332	190A	5	6680-182-7609	95	95
6625-179-1684	189	22	6680-183-0374	95	10
6625-179-1684	189A	56	6680-183-0374	95	146
6625-179-1684	189A	96	6680-183-0374	95	95
6625-437-2548	189A	3	6680-184-8507	219	41
6625-453-9442	189	19	6680-184-8507	219	82
6625-453-9443	188		6680-184-8507	219A	118
6625-453-9443	189		6680-184-8507	219A	13
6625-838-2939	167	26	6680-184-8507	221A	
6625-843-2365	167	27	6680-184-8510	218	38
6625-843-2365	167	28	6680-184-8510	221A	
6625-878-8011	192		6680-221-5010	190A	7
6625-889-7148	207	32	6680-296-0328	221A	9
6625-889-7148	207	37	6680-309-2953	221A	9
6625-889-7148	208	39	6680-408-9652	139	53B
6625-933-7407	F22				
6625-933-7408	F22		6680-704-9250	169	2
6635-246-8465	A43		6680-704-9250	173	2
6640-901-5454	BULK		6680-704-9252	169	23
6645-179-2250	A36		6680-704-9252	173	22
6645-448-4872	157	45	6680-704-9255	169	56
6645-487-4675	157	45	6680-716-0969	133	8
6645-515-6515	157	45	6680-730-3256	169	58
6645-523-4038	157	45	6680-783-4026	186	26
6645-526-6716	157	45	6680-803-2243	169	6
6645-526-6723	157	45	6680-803-2243	173	5
6645-526-6726	157	45	6680-847-7197	167	39
6645-526-6728	157	45	6680-852-3600	71	9
6645-526-6730	157	45	6680-855-6048	95	10
6645-526-6734	157	45	6680-855-6048	95	146
6645-535-6634	157	45	6680-855-6048	95	95
6645-552-6710	157	45	6680-857-2397	71	22
6645-557-3241	157	45	6680-857-2397	71	85
6645-624-7035	157	45	6680-857-2397	75	87
6645-653-4444	157	45	6680-857-2397	108	4
6645-663-4086	157	45	6680-870-6906	107	11
6645-663-4090	157	45	6680-871-7081	139	53B
6645-663-4093	157	45	6680-876-9751	169	65
6645-663-4102	157	45	6680-876-9751	173	54
6645-663-4104	157	45	6680-886-3439	204	33A
6645-663-4106	157	45	6680-886-3451	204	33B
6645-663-5974	157	45	6680-890-2749	219	41
6645-663-6002	157	45	6680-890-2749	219	82
6645-663-6003	157	45	6680-890-2749	221A	
6645-663-7569	157	45	6680-890-2750	218	38
6645-775-3932	157	45	6680-890-2750	221A	
6645-787-2673	157	45	6680-890-2751	218	48
6645-950-8599	157	45	6680-890-2751	221A	
6645-950-8599	157	45	6680-891-3145	186	24
6645-950-8599	157	45	6680-891-3174	186	28
6645-950-8599	158	40	6680-891-3175	186	29
6650-059-6268	A52	8	6680-891-3176	186	6
6650-133-7862	A44	5	6680-898-7923	186	17
6650-835-4854	A52	10	6680-925-2970	211	42
6650-999-2656	A52	2	6680-981-5114	251	59
6680-027-2972	72	86	6680-982-9972	211	43
6680-027-2972	74	19			
6680-049-5484	186	27	6685-067-8405	117	
6680-056-7129	182	32	6685-067-8405	129	
6680-056-7129	186		6685-087-8229	117	77
6680-065-1412	26	12	6685-087-8229	129	137

STOCK NUMBER	FIGURE NUMBER	ITEM NUMBER	STOCK NUMBER	FIGURE NUMBER	ITEM NUMBER
6685-087-8229	129	56	6810-222-2742	MSUP	
6685-090-8912	69	4	6810-222-9641	MSUP	
6685-090-8912	70	19	6810-222-9643	MSUP	
6685-248-1590	62		6810-223-7612	MSUP	
6685-248-6974	F24	4	6810-223-9067	MSUP	
6685-450-4489	117	77	6810-234-8377	MSUP	
6685-450-4489	129	137	6810-237-2906	MSUP	
6685-450-4489	129	56	6810-237-2918	MSUP	
6685-486-9006	69	4	6810-238-8119	MSUP	
6685-512-1228	117	77	6810-241-1131	MSUP	
6685-512-1228	129	137	6810-262-8574	MSUP	
6685-512-1228	129	56	6810-264-6517	MSUP	
6685-514-6273	157	57	6810-264-6525	MSUP	
6685-514-6273	158	52	6810-264-6548	MSUP	
6685-526-7881	117	77	6810-264-6618	MSUP	
6685-526-7881	129	137	6810-264-6715	MSUP	
6685-526-7881	129	56	6810-270-8177	MSUP	
6685-530-3614	167	30	6810-270-9982	MSUP	
6685-556-8810	117	77	6810-270-9984	MSUP	
6685-556-8810	129	137	6810-281-2001	MSUP	
6685-556-8810	129	56	6810-281-2002	MSUP	
6685-557-0215	167	36	6810-281-2761	MSUP	
6685-557-0370	167	31	6810-281-2785	MSUP	
6685-557-5316	188	64	6810-281-5272	MSUP	
6685-557-5317	117	83	6810-286-3785	MSUP	
6685-557-5317	119	395	6810-290-0048	MSUP	
6685-557-5317	129	93	6810-290-0051	MSUP	
6685-578-5584	167	30	6810-543-4012	MSUP	
6685-609-6946	170	65	6810-543-4041	MSUP	
6685-623-0427	170	20	6810-584-4070	MSUP	
6685-623-0427	171	22	6810-598-6600	MSUP	
6685-663-8559	117	77	6810-628-3383	MSUP	
6685-663-8559	129	137	6810-664-0387	MSUP	
6685-663-8559	129	56	6810-819-1128	MSUP	
6685-663-8566	117	77	6810-855-6160	MSUP	
6685-663-8566	129	137	6810-893-8138	MSUP	
6685-663-8566	129	56	6820-001-4192	MSUP	
6685-824-1633	129	54	6820-412-2296	MSUP	
6685-833-3020	117	77	6820-926-8887	MSUP	
6685-833-3020	129	137	6830-264-6755	MSUP	
6685-833-3020	129	56	6830-292-0131	MSUP	
6685-869-8067	62		6830-880-1838	MSUP	
6685-880-1532	62		6840-721-6055	MSUP	
6685-880-1532	QC1		6850-139-5297	MSUP	
6685-906-0285	A6	7	6850-142-9582	MSUP	
6685-954-7417	117	77	6850-144-9816	MSUP	
6685-954-7417	129	137	6850-174-9672	MSUP	
6685-954-7417	129	56	6850-181-7933	MSUP	
6695-045-4522	167	40	6850-209-7234	MSUP	
6695-045-4523	182	32	6850-224-6658	MSUP	
6695-045-4523	186A		6850-242-4728	MSUP	
6695-073-8685	222		6850-256-0157	MSUP	
6695-075-2450	167	33	6850-264-6571	MSUP	
6695-224-8930	157		6850-264-6572	MSUP	
6695-224-8930	158		6850-264-6573	MSUP	
6695-350-4391	173	238	6850-264-9037	MSUP	
6695-410-5926	186A	4	6850-264-9038	MSUP	
6695-411-0019	186A	5	6850-273-2395	MSUP	
6695-906-5832	F22		6850-282-6770	MSUP	
6695-923-9046	167	37	6850-285-8011	MSUP	
6695-923-9046	169		6850-341-8430	MSUP	
6695-941-4087	167	33	6850-550-5565	MSUP	
6695-941-4087	173		6850-551-3694	MSUP	
6695-955-9475	167	33	6850-558-1248	MSUP	
6695-955-9476	167	37	6850-597-1528	MSUP	
6810-006-4206	MSUP		6850-621-1820	MSUP	
6810-141-6080	MSUP		6850-664-9067	MSUP	
6810-143-2000	MSUP		6850-702-8451	MSUP	
6810-184-4796	MSUP		6850-782-2726	MSUP	
6810-184-4800	MSUP		6850-803-6420	MSUP	
6810-201-0907	MSUP		6850-826-0981	MSUP	

STOCK NUMBER	FIGURE NUMBER	ITEM NUMBER	STOCK NUMBER	FIGURE NUMBER	ITEM NUMBER
6850-854-7952	MSUP		8010-162-5289	MSUP	
6850-901-0591	MSUP		8010-165-4782	MSUP	
6850-924-8827	MSUP		8010-166-3147	MSUP	
6850-927-9461	MSUP		8010-166-3152	MSUP	
6850-935-0995	MSUP		8010-166-3158	MSUP	
6850-965-2332	MSUP		8010-166-3164	MSUP	
7510-105-3090	BULK		8010-168-8812	MSUP	
7510-105-3091	BULK		8010-241-8406	MSUP	
7510-105-3092	BULK		8010-242-2089	MSUP	
7510-144-9673	BULK		8010-243-9767	MSUP	
7510-144-9674	BULK		8010-246-6116	MSUP	
7510-144-9675	BULK		8010-246-6443	MSUP	
7510-144-9688	BULK		8010-246-6445	MSUP	
7510-161-0813	MSUP		8010-248-2838	MSUP	
7510-161-4279	BULK		8010-251-6501	MSUP	
7510-266-6712	BULK		8010-257-5377	MSUP	
7510-514-0981	BULK		8010-257-5378	MSUP	
7510-515-0319	BULK		8010-257-5379	MSUP	
7510-550-7125	BULK		8010-262-9172	MSUP	
7510-550-7126	BULK		8010-286-7758	MSUP	
7510-550-7127	BULK		8010-290-4302	MSUP	
7510-550-7129	BULK		8010-290-6158	MSUP	
7510-634-3264	BULK		8010-290-6984	MSUP	
7510-634-3267	BULK		8010-297-0593	MSUP	
7510-663-0196	BULK		8010-515-0800	MSUP	
7510-720-7516	BULK		8010-515-1568	MSUP	
7510-778-1597	BULK		8010-515-1596	MSUP	
7510-816-1020	BULK		8010-515-2208	MSUP	
7510-826-1876	BULK		8010-515-2258	MSUP	
7510-846-8674	BULK		8010-526-3296	MSUP	
7510-889-3494	F4		8010-527-1508	MSUP	
7510-889-3494	BULK		8010-527-2053	MSUP	
7510-995-4893	BULK		8010-527-2483	MSUP	
7520-973-1059	MSUP		8010-527-2484	MSUP	
7690-112-8981	BULK		8010-527-2493	MSUP	
7690-180-6093	BULK		8010-527-2496	MSUP	
7690-180-6095	BULK		8010-527-2500	MSUP	
7690-180-6096	BULK		8010-527-2518	MSUP	
7690-180-6102	BULK		8010-527-2884	MSUP	
7690-180-6129	BULK		8010-527-2897	MSUP	
7690-180-6132	BULK		8010-530-5827	MSUP	
7690-400-7986	BULK		8010-530-6387	MSUP	
7690-400-7991	BULK		8010-543-2085	MSUP	
7690-400-7995	BULK		8010-551-7932	MSUP	
7690-400-7996	BULK		8010-551-7933	MSUP	
7690-401-1689	BULK		8010-551-7934	MSUP	
7690-401-1695	BULK		8010-558-7026	MSUP	
7690-401-4686	BULK		8010-584-2426	MSUP	
7690-401-4694	BULK		8010-597-7856	MSUP	
7690-440-0046	BULK		8010-598-4718	MSUP	
7690-582-0635	BULK		8010-598-5455	MSUP	
7690-753-4727	BULK		8010-598-5932	MSUP	
7690-753-4741	BULK		8010-616-4009	MSUP	
7690-753-4742	BULK		8010-664-0018	MSUP	
7920-205-1711	MSUP		8010-664-1914	MSUP	
7920-823-9772	MSUP		8010-664-6155	MSUP	
7930-267-5588	MSUP		8010-664-8263	MSUP	
7930-634-5340	MSUP		8010-687-4019	MSUP	
7930-891-7551	MSUP		8010-687-4386	MSUP	
7930-965-2330	MSUP		8010-721-9744	MSUP	
7930-999-2417	MSUP		8010-835-2114	MSUP	
8010-060-3253	MSUP		8010-835-7215	MSUP	
8010-082-2421	MSUP		8010-847-4968	MSUP	
8010-082-2479	MSUP		8010-866-6810	MSUP	
8010-112-9478	MSUP		8010-891-3112	MSUP	
8010-141-2952	MSUP		8010-899-0931	MSUP	
8010-141-2958	MSUP		8010-899-8825	MSUP	
8010-159-4449	MSUP		8010-927-9506	MSUP	
8010-160-5787	MSUP		8010-930-7258	MSUP	
8010-160-5788	MSUP		8010-941-8712	MSUP	
8010-161-7370	MSUP		8010-943-7126	MSUP	

STOCK NUMBER	FIGURE NUMBER	ITEM NUMBER	STOCK NUMBER	FIGURE NUMBER	ITEM NUMBER
8010-943-7127	MSUP		8040-165-8614	MSUP	
8010-985-0751	MSUP		8040-200-3794	MSUP	
8030-081-2286	MSUP		8040-200-4390	MSUP	
8030-081-2326	MSUP		8040-262-9011	MSUP	
8030-081-2328	MSUP		8040-262-9060	MSUP	
8030-081-2335	MSUP		8040-266-0815	MSUP	
8030-082-2425	MSUP		8040-270-8136	MSUP	
8030-087-8630	MSUP		8040-270-8137	MSUP	
8030-104-9321	MSUP		8040-270-8148	MSUP	
8030-145-0001	MSUP		8040-290-4301	MSUP	
8030-152-0064	MSUP		8040-291-0162	MSUP	
8030-165-8577	MSUP		8040-298-1946	MSUP	
8030-209-8005	MSUP		8040-515-2250	MSUP	
8030-231-2345	MSUP		8040-598-5164	MSUP	
8030-231-2353	MSUP		8040-653-3104	MSUP	
8030-244-1293	MSUP		8040-664-2912	MSUP	
8030-244-1297	MSUP		8040-664-4318	MSUP	
8030-244-1298	MSUP		8040-701-9616	MSUP	
8030-252-3391	MSUP		8040-721-9091	MSUP	
8030-262-9045	MSUP		8040-733-7281	MSUP	
8030-264-3886	MSUP		8040-763-7145	MSUP	
8030-275-8114	MSUP		8040-776-9603	MSUP	
8030-275-8117	MSUP		8040-809-8252	MSUP	
8030-281-2339	MSUP		8040-822-6430	MSUP	
8030-285-1570	MSUP		8040-831-3403	MSUP	
8030-286-2735	MSUP		8040-855-0779	MSUP	
8030-530-5234	MSUP		8040-860-9773	MSUP	
8030-537-7925	MSUP		8040-917-9932	MSUP	
8030-559-6131	MSUP		8040-922-8288	MSUP	
8030-597-5367	MSUP		8040-943-2502	MSUP	
8030-598-4503	MSUP		8040-952-5713	MSUP	
8030-613-3131	MSUP		8040-955-9491	MSUP	
			8040-955-9514	MSUP	
8030-629-1444	BULK		8105-290-0340	BULK	
8030-629-1444	MSUP		8105-880-4353	MSUP	
8030-664-4017	MSUP		8110-758-1934	71	
8030-664-4968	MSUP		8115-056-2331	69	
8030-664-7583	MSUP		8115-056-2332	71	
8030-723-2746	MSUP		8115-056-2334	81	
8030-731-3578	MSUP		8115-121-6350	71	
8030-738-0673	MSUP		8115-285-7051	76	
8030-753-4596	MSUP		8115-852-6720	75	
8030-754-2408	BULK		8125-933-4414	BULK	
8030-778-4277	MSUP		8135-160-7759	MSUP	
8030-784-3479	MSUP		8135-183-8814	BULK	
8030-811-3723	MSUP		8135-224-8885	BULK	
8030-829-0376	MSUP		8135-551-1245	BULK	
8030-829-4554	MSUP		8135-579-9284	BULK	
8030-838-7789	MSUP		8135-618-1783	BULK	
8030-845-3347	MSUP		8135-634-2946	BULK	
8030-860-9771	BULK		8135-753-4661	BULK	
8030-860-9771	MSUP		8145-056-2335	83	
8030-881-5238	MSUP		8145-056-2337	91	
8030-889-3535	BULK		8145-104-4647	71	
8030-900-2373	MSUP		8145-285-7052	76	
8030-905-6818	MSUP		8145-563-9803	75	
8030-907-0879	MSUP		8145-881-0161	69	
			8145-881-0161	70	
			8145-901-1172	81	
8030-955-0624	MSUP		8305-051-2163	BULK	
8030-965-2437	MSUP		8305-178-6825	BULK	
8030-980-3976	MSUP		8305-191-3977	BULK	
8030-981-7007	MSUP		8305-227-1247	BULK	
8040-016-8662	MSUP		8305-256-3902	BULK	
8040-057-4108	MSUP		8305-260-6909	BULK	
8040-104-5292	MSUP		8305-261-8856	BULK	
8040-104-9505	MSUP		8305-267-3015	BULK	
8040-144-9774	MSUP		8305-443-5601	BULK	
8040-145-0019	MSUP		8305-514-4263	BULK	
8040-152-0028	MSUP		8305-530-0109	BULK	
8040-152-0067	MSUP		8305-753-2967	BULK	

STOCK NUMBER	FIGURE NUMBER	ITEM NUMBER
8305-926-1584	BULK	
8305-926-1585	BULK	
8305-926-6869	BULK	
8310-187-3920	BULK	
8310-262-2772	BULK	
8315-901-9716	BULK	
8315-901-9717	BULK	
8315-926-1612	BULK	
8315-935-0505	BULK	
8315-935-6721	BULK	
8315-935-6722	BULK	
8315-935-6723	BULK	
8315-935-6724	BULK	
8330-823-7545	MSUP	
8520-531-6484	MSUP	
8945-080-9379	MSUP	
9140-242-6748	MSUP	
9150-145-0268	MSUP	
9150-159-4472	MSUP	
9150-180-5975	MSUP	
9150-180-6181	MSUP	
9150-180-6266	MSUP	
9150-190-0904	MSUP	
9150-223-4129	MSUP	
9150-223-4130	MSUP	
9150-223-4134	MSUP	
9150-250-0926	MSUP	
9150-252-6383	MSUP	
9150-269-8255	MSUP	
9150-478-0055	MSUP	
9150-542-1430	MSUP	
9150-577-5841	MSUP	
9150-597-6628	MSUP	
9150-616-9020	MSUP	
9150-754-0064	MSUP	
9150-754-2595	MSUP	
9150-782-2627	MSUP	
9150-813-5123	MSUP	
9150-889-3516	MSUP	
9150-935-5851	MSUP	
9150-935-9807	MSUP	
9150-944-8953	MSUP	
9150-965-2305	MSUP	
9150-985-7099	MSUP	
9150-985-7246	MSUP	
9150-985-7247	MSUP	
9160-253-1173	MSUP	
9320-019-0351	BULK	
9320-057-9820	BULK	
9320-069-5175	BULK	
9320-069-5177	BULK	
9320-122-5447	BULK	
9320-143-6851	BULK	
9320-202-1846	BULK	
9320-202-1847	BULK	
9320-232-2438	BULK	
9320-241-9740	BULK	
9320-241-9742	BULK	
9320-241-9759	BULK	
9320-241-9763	BULK	
9320-599-7428	BULK	
9320-599-8440	BULK	
9320-618-0918	BULK	
9320-729-7066	BULK	
9320-763-6908	21	
9320-782-7798	BULK	
9320-800-1821	BULK	
9320-879-9889	BULK	
9320-880-4520	BULK	
9320-880-4520	BULK	
9320-931-8302	18	
9320-949-8363	BULK	
9320-978-7663	18	
9320-995-6909	BULK	
9330-027-3345	BULK	
9330-027-3345	KITS	
9330-089-8033	BULK	
9330-202-1890	BULK	
9330-202-1900	BULK	
9330-260-3806	BULK	
9330-260-3807	BULK	
9330-290-3462	BULK	
9330-291-4800	BULK	
9330-291-5952	BULK	
9330-540-5673	BULK	
9330-576-3979	BULK	
9330-579-6686	BULK	
9330-580-6886	BULK	
9330-664-4871	BULK	
9330-664-4893	BULK	
9330-788-9738	BULK	
9330-809-1463	BULK	
9330-836-8493	BULK	
9330-836-8493	KITS	
9330-890-2842	BULK	
9390-057-4543	BULK	
9390-057-4545	BULK	
9390-106-2465	BULK	
9390-106-2466	BULK	
9390-106-2467	BULK	
9390-151-4863	BULK	
9390-165-5988	BULK	
9390-225-5108	21	43
9390-247-7279	BULK	
9390-289-8702	BULK	
9390-379-2615	BULK	
9390-554-9387	BULK	
9390-720-4465	BULK	
9390-727-4476	BULK	
9390-759-2854	BULK	
9390-759-2855	BULK	
9390-759-4093	BULK	
9390-759-4094	BULK	
9390-759-9757	BULK	
9390-759-9765	BULK	
9390-763-4846	BULK	
9390-791-7582	BULK	
9390-791-7789	BULK	
9390-791-7943	BULK	
9390-792-1500	BULK	
9390-792-1501	BULK	
9390-792-2306	BULK	
9390-880-2732	BULK	
9390-882-2029	192	
9390-906-3544	BULK	
9390-910-0102	BULK	
9390-910-3138	BULK	
9390-937-2611	16	
9390-937-2611	21	
9390-937-2611	BULK	
9390-941-8776	213	
9390-945-4826	BULK	
9390-949-8242	BULK	
9505-191-1704	BULK	
9505-199-7830	BULK	
9505-228-6411	BULK	
9505-242-7527	BULK	
9505-243-7619	BULK	
9505-248-9846	BULK	
9505-248-9848	BULK	
9505-248-9849	BULK	
9505-248-9851	BULK	

STOCK NUMBER	FIGURE NUMBER	ITEM NUMBER	STOCK NUMBER	FIGURE NUMBER	ITEM NUMBER
9505-293-4208	BULK		9530-236-8431	BULK	
9505-596-1662	BULK		9530-237-5156	BULK	
9505-596-1668	BULK		9530-237-5160	BULK	
9505-596-5101	BULK		9530-244-6931	BULK	
9505-640-4290	BULK		9535-084-4370	BULK	
9505-804-3814	BULK		9535-084-4395	BULK	
9505-821-6916	BULK		9535-084-4430	BULK	
9505-994-4253	BULK		9535-084-4438	BULK	
9505-995-3177	BULK		9535-084-4448	BULK	
9510-528-4579	BULK		9535-084-4469	BULK	
9510-529-8689	BULK		9535-084-4484	BULK	
9515-142-6190	BULK		9535-084-4516	BULK	
9515-184-8807	BULK		9535-084-4519	BULK	
9515-184-8808	BULK		9535-084-4532	BULK	
9515-184-8811	BULK		9535-084-4533	BULK	
9515-184-8815	BULK		9535-084-4538	BULK	
9515-184-8822	BULK		9535-084-4551	BULK	
9515-184-8843	BULK		9535-084-4558	BULK	
9515-203-5899	BULK		9535-084-4581	BULK	
9515-203-5901	BULK		9535-084-4589	BULK	
9515-203-5902	BULK		9535-085-4133	BULK	
9515-204-0220	BULK		9535-085-4134	BULK	
9515-204-0230	BULK		9535-085-4157	BULK	
9515-222-5079	BULK		9535-085-4169	BULK	
9515-234-7941	BULK		9535-085-4397	BULK	
9515-234-7943	BULK		9535-085-4408	BULK	
9515-234-7944	BULK		9535-085-4409	BULK	
9515-234-7949	BULK		9535-086-9459	BULK	
9515-234-7953	BULK		9535-086-9465	BULK	
9515-235-7609	BULK		9535-086-9729	BULK	
9515-269-5815	BULK		9535-086-9751	BULK	
9515-269-5824	BULK		9535-086-9752	BULK	
9515-294-9923	BULK		9535-086-9753	BULK	
9515-528-4783	BULK		9535-086-9808	BULK	
9515-529-0434	BULK		9535-086-9864	BULK	
9515-580-6551	BULK		9535-086-9890	BULK	
9515-596-1727	BULK		9535-088-6599	BULK	
9515-596-1764	BULK		9535-104-5291	BULK	
9515-596-1765	BULK		9535-106-0609	BULK	
9515-596-1944	BULK		9535-167-2173	BULK	
9515-618-7542	BULK		9535-167-2174	BULK	
9515-618-7720	BULK		9535-167-2247	BULK	
9515-618-7726	BULK		9535-167-2248	BULK	
9515-618-7727	BULK		9535-167-2264	BULK	
9515-618-8658	BULK		9535-167-2265	BULK	
9515-640-4142	BULK		9535-167-2267	BULK	
9515-640-4144	BULK		9535-167-2274	BULK	
9515-640-4145	BULK		9535-167-2277	BULK	
9515-640-4146	BULK		9535-167-2278	BULK	
9515-640-4237	BULK		9535-167-2279	BULK	
9515-683-9284	BULK		9535-167-2280	BULK	
9515-684-4600	BULK		9535-203-1888	BULK	
9515-684-4601	BULK		9535-232-0378	BULK	
9515-684-4602	BULK		9535-232-0398	BULK	
9515-720-0570	BULK		9535-232-0405	BULK	
9515-815-6435	BULK		9535-232-0418	BULK	
9515-833-2367	BULK		9535-232-0437	BULK	
9525-063-1444	BULK		9535-232-0489	BULK	
9525-204-1050	BULK		9535-232-0494	BULK	
9525-803-3044	BULK		9535-232-0501	BULK	
9530-017-6412	BULK		9535-232-0503	BULK	
9530-053-1844	BULK		9535-232-0519	BULK	
9530-115-6377	BULK		9535-232-0522	BULK	
9530-167-1818	BULK		9535-232-0525	BULK	
9530-228-9313	BULK		9535-232-0529	BULK	
9530-230-6345	BULK		9535-232-0532	BULK	
9530-231-7686	BULK		9535-232-0543	BULK	
9530-233-1280	BULK		9535-232-0565	BULK	
9530-235-9854	BULK		9535-232-0569	BULK	
9530-236-1378	BULK		9535-232-0583	BULK	
9530-236-7690	BULK		9535-232-1882	BULK	

STOCK NUMBER	FIGURE NUMBER	ITEM NUMBER
9535-232-1884	BULK	
9535-232-1886	BULK	
9535-232-6947	BULK	
9535-232-7525	BULK	
9535-232-7531	BULK	
9535-232-7533	BULK	
9535-232-7534	BULK	
9535-232-7535	BULK	
9535-232-7536	BULK	
9535-232-7539	BULK	
9535-232-7541	BULK	
9535-232-7542	BULK	
9535-232-8825	BULK	
9535-232-8846	BULK	
9535-236-7073	BULK	
9535-236-7074	BULK	
9535-236-7075	BULK	
9535-236-7091	BULK	
9535-242-5665	BULK	
9535-242-8604	BULK	
9535-243-1875	BULK	
9535-243-3513	BULK	
9535-249-5803	BULK	
9535-249-5808	BULK	
9535-249-5809	BULK	
9535-249-5811	BULK	
9535-249-5813	BULK	
9535-250-6499	BULK	
9535-250-6500	BULK	
9535-250-6502	BULK	
9535-250-6907	BULK	
9535-254-4262	BULK	
9535-288-0666	BULK	
9535-288-0675	BULK	
9535-528-7174	BULK	
9535-529-8910	BULK	
9535-542-4702	BULK	
9535-542-4704	BULK	
9535-542-4705	BULK	
9535-554-1417	BULK	
9535-554-1418	BULK	
9535-555-8862	BULK	
9535-575-5979	BULK	
9535-575-5980	BULK	
9535-596-3794	BULK	
9535-640-2311	BULK	
9535-640-4225	BULK	
9535-640-4273	BULK	
9535-640-4274	BULK	
9535-684-4140	BULK	
9535-727-0715	BULK	
9540-006-4911	BULK	
9540-008-6025	BULK	
9540-017-6413	BULK	
9540-022-3193	BULK	
9540-022-3194	BULK	
9540-022-3195	BULK	
9540-052-7087	BULK	
9540-078-6093	BULK	
9540-078-6107	BULK	
9540-102-4687	BULK	
9540-104-5286	BULK	
9540-133-6395	21	
9540-133-6499	BULK	
9540-142-6933	BULK	
9540-145-4508	BULK	
9540-145-4519	BULK	
9540-145-5699	BULK	
9540-145-5716	BULK	
9540-145-8449	BULK	
9540-151-5114	BULK	
9540-185-3761	BULK	
9540-186-6333	BULK	
9540-186-6334	BULK	
9540-197-9840	BULK	
9540-197-9840	BULK	
9540-231-9911	BULK	
9540-234-0592	BULK	
9540-234-0610	BULK	
9540-236-3967	BULK	
9540-247-2176	BULK	
9540-251-2569	BULK	
9540-261-5096	BULK	
9540-261-5107	BULK	
9540-261-5117	BULK	
9540-261-5614	BULK	
9540-287-9459	BULK	
9540-299-0102	BULK	
9540-402-0411	BULK	
9540-482-9572	BULK	
9540-528-7277	BULK	
9540-528-7282	BULK	
9540-528-7299	BULK	
9540-540-5941	BULK	
9540-555-0816	BULK	
9540-555-9658	BULK	
9540-580-6338	BULK	
9540-585-7205	BULK	
9540-595-7155	BULK	
9540-596-2834	BULK	
9540-596-2955	BULK	
9540-596-3002	BULK	
9540-596-3006	BULK	
9540-640-4613	BULK	
9540-720-0647	BULK	
9540-720-1338	BULK	
9540-720-1347	BULK	
9540-928-7344	BULK	
9540-928-7369	BULK	
9540-928-7381	BULK	
9540-939-8568	BULK	
9905-013-9326	45	
9905-015-2319	126	16
9905-015-2319	128	1
9905-027-3009	275	
9905-052-0394	74	25
9905-054-3612	102	35
9905-054-3613	103	28
9905-068-6738	196	61
9905-069-3445	196	60
9905-072-0824	196	6
9905-072-8998	63	90
9905-072-8998	138	29
9905-072-8998	149	65
9905-072-8998	154	43
9905-072-8998	266	20
9905-072-8998	267	31
9905-072-8998	274	37
9905-089-1642	265	270
9905-097-8428	100	23
9905-121-1037	45	
9905-165-7190	50	9
9905-165-7193	50	14
9905-166-6062	266	22
9905-166-6062	267	29
9905-178-5841	34	
9905-178-5872	197	
9905-192-6340	28	24D

STOCK NUMBER	FIGURE NUMBER	ITEM NUMBER	STOCK NUMBER	FIGURE NUMBER	ITEM NUMBER
9905-219-2824	138	31			
9905-219-2824	149	64			
9905-219-2824	274	39			
9905-317-9515	65	55			
9905-514-9821	154	41			
9905-514-9821	266	18			
9905-532-2497	42B				
9905-616-9956	216	5			
9905-639-1444	215	20			
9905-763-1273	94	18			
9905-772-6104	69	51			
9905-778-8850	63	95			
9905-784-7589	51	27			
9905-825-1519	76				
9905-825-1519	81	129			
9905-825-1519	83	374			
9905-825-1519	89	130			
9905-831-1099	157	65			
9905-831-1099	158	62			
9905-852-4774	167	50			
9905-859-6143	81	23A			
9905-863-1120	73	16			
9905-863-1262	71	92			
9905-863-1263	71	95			
9905-869-6243	193	3			
9905-878-9153	16	49			
9905-878-9153	19	8			
9905-878-9153	21				
9905-878-9153	28	32			
9905-882-8129	102	35			
9905-882-8130	103	28			
9905-894-0422	70	26			
9905-900-5731	111	15			
9905-901-5152	73	18			
9905-902-2086	105	1			
9905-913-9783	268	235			
9905-925-7065	75	149			
9905-925-7065	75	160			
9905-925-7065	75	184			
9905-925-7065	75	192			
9905-927-4473	144	5			
9905-928-3422	76				
9905-932-5185	135				
9905-940-6866	45				
9905-941-3728	45				
9905-941-8787	149	45			
9905-941-8787	274	20			
9905-941-8788	149	44			
9905-941-8788	274	19			
9905-942-7569	149	67			
9905-954-1238	34				
9905-956-9914	83	121			
9905-958-5381	274	35			
9905-998-7615	54	50			

SUPPLEMENTARY NUMERICAL STOCK NUMBER LISTING

This list contains a federal stock number change and assignment received subsequent to the computer printing of the camera ready copy for this publication. Related text and stock number listing are also updated.

SECTION IV

STOCK NUMBER	FIGURE NUMBER	ITEM NUMBER
3010-881-4198	25	27
3010-889-7923	25	22
3010-889-7924	25	21
3020-738-6774	265	195
3020-738-6774	268	167
3020-781-9386	37	29
3020-856-1426	263	8
3020-979-5606	22	43B
3040-012-3233	246	1
3040-042-3917	242	38
3040-042-3918	242	39
3040-042-9482	239	56
3040-042-9485	239	155
3040-057-7923	223	20
3040-105-8358	275	
3040-176-1193	83	216
3040-176-1194	81	164
3040-176-1195	83	321
3040-176-1196	76	65
3040-176-1200	89	61
3040-176-1201	81	186
3040-176-1225	83	194
3040-446-2859	223	36
3040-604-0953	265	85
3040-604-0953	268	18
3040-759-4112	265	53
3040-759-4112	268	15
3040-759-5487	268	255
3040-759-5487	265	193
3040-759-5501	268	26
3040-759-5501	265	83
3040-764-3721	273	19
3040-781-0253	239	13
3040-781-0254	239	7
3040-781-0255	222	142
3040-781-0255	237	52A
3040-781-0256	239	106A
3040-781-0256	239	175
3040-781-0258	239	13A
3040-781-0261	242	40
3040-781-6603	88	48
3040-824-2085	242	36
3040-862-9260	222	9
3040-862-9262	222	11C
3040-862-9270	223	7
3040-862-9277	223	28
3040-862-9278	223	37
3040-883-1688	222	199
3040-883-1688	222	79
3040-883-1691	244	88A
3040-883-1696	244	88A
3040-912-7143	222	149
3040-912-7143	237	24A
3040-944-6051	75	32B
3040-946-9450	75	32B
3040-948-6503	228	58A
3040-954-9741	228	121A
3040-955-0206	243	5
3040-955-5276	244	21A
3040-961-1330	273	23
3040-963-1097	242	37
3040-963-1098	242	38
3040-963-1099	242	39
3040-963-1100	242	40
3040-980-7317	238	34
3040-980-7319	240	20A
3040-995-2616	248	103
3110-859-6140	81	167
3120-003-6123	11B	39B
3120-088-6124	102	7
3120-088-6124	103	7
3120-540-6992	197	22
3120-781-0432	226	50
3120-781-7305	190	146
3120-843-8273	71	66
3120-896-6319	190	150
4010-313-9197	22	29
4140-944-2557	251	12
4320-109-4847	148	11A
4820-903-3756	117	43A
4820-903-3756	117	72
4820-903-3756	119	
4820-903-3756	129	110A
4820-903-3756	129	114
4820-903-3756	129	48
4820-903-3756	129	71A
5306-060-7930	81	166B
5306-156-2337	219A	59
5306-156-2337	219A	164
5315-234-1854	242	1
5315-234-1854	242	2
5320-069-0781	BULK	
5330-862-9283	76	86
5340-074-9950	75	22
5340-929-1047	239	58
5360-042-5878	144	13
5360-083-6250	134	55
5360-115-4867	132	27
5360-115-4867	146	32
5360-134-3368	189A	36
5360-142-0158	183	36
5360-607-5962	197	50
5360-620-8266	154	30
5360-628-2646	225	11
5360-628-2648	225	15
5360-766-5135	234	55
5360-835-1479	224	44
5360-856-9490	18	4
5360-856-9490	18	14
5360-856-9490	18	121
5360-856-9490	18	137
5360-856-9490	18	144
5360-856-9490	18	151
5360-856-9490	18	160
5360-856-9490	KITS	
5360-883-2863	BULK	
5360-905-5117	184	11
5360-909-1597	138	49
5360-913-6582	134	15
5360-916-8364	149	96
5360-917-3828	20	
5360-918-0481	20	
5360-938-4021	18	164
5360-938-4021	18	
5360-938-4021	32	
5360-938-4021	32	
5360-938-4021	32	
5360-966-2412	148	19
5360-989-7625	BULK	
5360-989-7626	BULK	
5360-998-6422	212	6
5365-010-5484	71	58
5365-012-3224	81	72
5365-012-3225	89	47
5365-012-3227	83	237
5365-012-3231	83	329
5365-014-5889	63	78
5365-014-5892	63	97
5365-018-6512	248	50
5365-042-5614	76	52
5365-042-5615	89	68
5365-042-5616	83	211

STOCK NUMBER	FIGURE NUMBER	ITEM NUMBER	STOCK NUMBER	FIGURE NUMBER	ITEM NUMBER
5365-042-5617	89	5	5365-633-5549	32	43
5365-042-5620	89	42	5365-633-5549	KITS	
5365-042-5788	89	49	5365-633-5557	BULK	
5365-057-1849	265	57	5365-633-5557	KITS	
5365-057-1850	265	131	5365-633-5562	BULK	
5365-057-1850	268	109	5365-662-3491	60	40
5365-057-4555	BULK		5365-662-3491	61	42
5365-057-8252	BULK		5365-662-8305	157	4
5365-060-7956	176	35	5365-662-8305	158	4
5365-060-7957	176	33	5365-684-2271	BULK	
5365-060-7957	177	43	5365-684-8067	28	
5365-060-7958	177	37	5365-684-8067	28	
5365-060-7960	176	38	5365-702-4473	265	122
5365-060-8171	210	40	5365-702-4473	268	128
5365-063-0805	265	92	5365-711-3159	129	
5365-063-0805	268	22	5365-711-8294	BULK	
5365-069-4619	216	8A	5365-711-8321	222	122
5365-079-3588	233	16	5365-711-8321	237	43
5365-081-4538	81	191	5365-716-8090	15	22
5365-081-4541	83	146	5365-716-8090	22	57
5365-093-7411	230	21	5365-719-7313	265	130
5365-105-3040	42B	75	5365-719-7313	268	108
5365-106-4480	67A	53	5365-763-7564	81	94
5365-113-3739	197	38	5365-763-9509	212	19
5365-115-9424	197		5365-768-7737	QCI	162
5365-128-1738	67	64	5365-768-7737	259	4
5365-130-6075	67	54	5365-779-5745	63	120
5365-135-0565	11B	21	5365-793-0734	212	14
5365-135-4660	63	11	5365-793-0742	212	14
5365-135-4661	63	12	5365-809-0651	76	148
5365-135-4661	67	20	5365-811-0902	210	48
5365-136-2417	65	80	5365-812-1756	BULK	
5365-203-8968	225	6	5365-824-1561	190	
5365-294-0580	95	161	5365-824-2043	65	69
5365-294-0580	115		5365-825-6469	129	
5365-294-0580	119		5365-826-0443	253	44
5365-294-0580	129		5365-826-0443	255	4
5365-294-0580	139		5365-826-0443	256	12
5365-294-0580	182		5365-826-5856	210	91
5365-294-0580	221	120	5365-834-1509	245	16
5365-294-0580	KITS		5365-834-1509	245	7
5365-294-1880	216	25	5365-836-6371	226	31
5365-337-2848	BULK		5365-841-9948	BULK	
5365-370-4629	230	65	5365-843-7118	71	6
5365-370-4629	231	69	5365-849-4695	BULK	
5365-400-3419	65	46	5365-849-7762	KITS	
5365-400-3420	65	41	5365-849-7762	72	9
5365-400-3421	63	24	5365-849-7853	223	168
5365-400-3421	67	9	5365-849-7855	223	122
5365-527-0592	268	224	5365-849-7856	223	167
5365-527-0592	265	203	5365-851-1168	76	127A
5365-528-6515	216	72	5365-851-5399	248	120
5365-531-6592	160	11	5365-856-0592	81	3
5365-540-5570	216	25	5365-856-0592	83	2A
5365-540-7066	216	25	5365-856-0592	KITS	
5365-541-9565	BULK		5365-863-1205	93	3
5365-558-3462	230	56	5365-863-1205	93	7
5365-560-2376	75	105	5365-863-1205	93	10
5365-580-1612	BULK		5365-865-3171	73	46
5365-580-3563	255	24	5365-865-3192	234	
5365-580-3563	218	73E	5365-865-8465	44	15
5365-580-3563	204		5365-865-8465	44	22A
5365-580-3563	KITS		5365-866-1254	253	13
5365-580-5790	BULK		5365-873-7535	270	61G
5365-585-3567	18		5365-880-2613	88	84F
5365-585-3582	226	9	5365-882-0320	BULK	
5365-585-3624	BULK		5365-882-0411	190A	11
5365-585-9004	257	19C	5365-882-0420	67A	28
5365-594-6056	BULK		5365-889-7273	265	38
5365-624-8011	190	13	5365-889-7273	268	57
5365-632-1254	BULK		5365-895-6265	67A	32

STOCK NUMBER	FIGURE NUMBER	ITEM NUMBER
5365-895-6365	248	22
5365-896-6314	190	149
5365-898-0105	75	11
5365-901-0038	45	30
5365-901-0040	43	
5365-901-0040	45	8E
5365-902-0051	240	82
5365-904-8366	67A	50
5365-914-3640	81	125
5365-914-3641	81	70
5365-914-3641	83	204
5365-914-3642	81	68
5365-914-3642	83	206
5365-914-3643	83	308
5365-914-3644	80	16
5365-914-3644	80	3
5365-914-3644	88	59
5365-914-3644	83	338
5365-914-3645	81	127
5365-914-3645	83	339
5365-914-3646	91	15
5365-914-3647	88	99
5365-914-4138	88	30
5365-915-0045	71	70
5365-915-1225	267	37
5365-917-3837	274	13
5365-926-5436	63	126
5365-926-5436	138	72
5365-926-5442	248	72
5365-932-5195	186	7
5365-936-4585	BULK	
5365-942-7580	149	83
5365-944-2004	81	92
5365-944-2014	83	228
5365-944-2556	72	32
5365-944-2556	72	63
5365-944-2556	73	8
5365-944-2756	216	70A
5365-945-8002	88	81
5365-949-3773	21	15
5365-949-8135	232	35
5365-950-2823	243	19
5365-952-7843	36	19
5365-960-8897	90	16
5365-966-3640	136	8
5365-977-2669	239	99
5365-986-6350	224	34
5365-989-2973	KITS	
5365-989-2973	100	13
5365-989-4261	239	181
5365-989-4289	239	143
5365-996-5134	79	13
5365-997-0586	192	80
5365-997-0586	232	20
5365-997-6325	239	162
5365-997-6328	BULK	
5365-998-3187	192	
5940-983-9588	186	23
5999-812-2082	BULK	
5999-905-1879	BULK	
5999-927-5265	189A	87
5999-951-5836	225	14
5999-975-0554	BULK	
6130-457-0593	188	66
6210-548-0370	157	17
6210-548-0370	157	23
6210-548-0370	157	32
6210-548-0370	157	55
6210-548-0370	157	61
6210-548-0370	158	32
6210-548-0370	158	32
6210-548-0370	158	50
6210-548-0370	158	56
8010-152-0010	MSUP	
8030-685-0915	MSUP	
8030-779-4700	MSUP	
9905-672-2192	16	49
9905-672-2192	19	8

REFERENCE NUMBER	MFG CODE	FIG NUMBER	ITEM NUMBER
AAM1528M2	12511	190A	9
AA1154	75292	265	
AA1154	75292	268	172B
AA1730-1301	81996	F2	1
AA1730-1301-1	81996	F2	2
AA1730-1301-10	81996	F2	5
AA1730-1301-11	81996	F2	6
AA1730-1301-37	81996	F2	9
AA1730-1301-38	81996	F2	7
AA1730-1301-6	81996	F2	3
AA1730-1301-7	81996	F2	8
AA1730-1301-9	81996	F2	4
AA2100-11D99	01414	140	18
AA2100-11D99	01414	142	9
AA24110	12511	190A	23
AA2560	12511	190A	39
AA3258-6D9	01414	142	6
AA4825-12D15	01414	141	11
AA4825-1211D2	01414	140	2
AA4825-1211D2	01414	141	14
AA4825-1211D3	01414	141	22
AA4825-1211D81	01414	140	14
AA4825-1211D81	01414	141	12
AA4825-1211SE4	06816	A48	7
AA4825-16D15	01414	140	12
AA51141	12511	190A	32
AA56109	12511	190A	45
ABRASIVEGRAIN	44197	MSUP	
AB02A1	86896	44	11
AB3258-6D13	01414	142	5
AB4825-12D142	01414	141	21
AB4825-121D61	01414	140	16
AB4825-1211D61	01414	141	4
AB4825-1211D62	01414	141	7
AB4825-16D4	01414	140	27
AB4825-16D5	01414	140	26
AB4825-161D62	01414	140	17
AB7665-4D71	01414	142	7
AB884AR	61349	162	46
AB967A	61349	162	41
ACA1182	76912	368	21
ACA1388A	76912	36A	1
ACA1388A	76912	368	1
ACA2128	76912	36	8
ACA2564	76912	36A	
ACA2919	76912	36A	19
ACA2998	76912	368	24
ACA3026	76912	36A	8
ACA3036	76912	36A	17
ACA3036	76912	368	20
AC2100-1	01414	133	8
AC3860	15814	36A	31
AC42A53		KITS	
AC42A53	89513	262	39
AC4825-12D10	01414	141	13
AC4825-12D8	01414	141	10
AC4825-12D9	01414	140	1
AC4825-12D9	01414	141	2
AC4825-1211D1A	01414	141	1
AC4825-1211D7	01414	141	9
AC4825-16D10	01414	140	15
AC4825-16D7	01414	140	8
AC4825-16D8	01414	140	10
AC4825EB122	01414	140	6
AC4825EB122	01414	141	19
AC4825F1211	01414	140	4
AC4825F1211	01414	141	16
AC64	20175	F1	34
AC68	20175	F1	35
AC7665E4		142	2
AC7665E4		KITS	
AC7665E6		142	2
AC9516F1	01414	A10	
ADHT6814M9716M	01414	A10	
ADS100	99145	183	6
ADS101-1	99145	183	7
ADS108	99145	183	3A
AD25521	61349	162	13
AEROSHELLGREASF2	54527	MSUP	
AE14020H	00624	BULK	
AE14020H	00624	KITS	
AE14024H	00624	BULK	
AE14024H	00624	KITS	
AE14026H	00624	BULK	
AE14026H	00624	KITS	
AE185L	61349	162	31
AE186L	61349	162	25
AE507T	61349	162	29B
AE507U	61349	162	26B
AE582C	61349	162	28
AE582D	61349	162	27
AE582E	61349	162	24
AE634D	61349	162	26A
AE634D	61349	162	29A
AE634E	61349	162	15A
AE91177M	00624	213	
AE91177M	00624	220	
AFPIDN06830-1	80049	MSUP	
AFS461-5-13	88041	BULK	
AFS461-6-12	88041	BULK	
AFS461-6-35	88041	BULK	
AF461-4-3	88041	BULK	
AF461-6-24	88041	BULK	
AF461-6-31	88041	BULK	
AF5	31989	F24	3
AF934-3	99238	262A	6
AG88C	61349	162	8A
AH106AJ18	61349	162	17
AH106A118	61349	162	30
AH1192AD18	61349	162	35
AH1491GW	61349	162	47
AH2025LQ	61349	162	6
AH3084Q	61349	162	1
AH4232B	61349	162	9
AH4233A	61349	162	7
AH4278A	61349	162	15B
AH4279	61349	162	16
AH4281B	61349	162	32B
AH4282	61349	162	20
AH4361	61349	162	5
AH464R	61349	162	12
AH464R	61349	162	23
AH486FR	61349	162	32A
AH486HO	61349	162	33
AH501EH	61349	162	37
AH501X18	61349	162	34
AH616K18	61349	162	21
AH940BS18	61349	162	19
AH940BT18	61349	162	14
AJ5-50	72794	18	
ALG266248XN8	90484	BULK	
ALSFT6-10	29666	BULK	
ALS179	09986	37A	8A
ALS180	09986	37A	19
ALS180-1	09986	37A	67

REFERENCE NUMBER	MFG CODE	FIG NUMBER	ITEM NUMBER
ALS30-1	09986	37A	97
ALS70	09986	37A	24
ALODINE1200	84063	MSUP	
AL1018-10-09	09986	37A	37
AL1031-10-01	09986	37A	73A
AL1031-10-07	09986	37A	76
AL1031-10-10	09986	37A	57
AL1031-10-10	09986	37A	66A
AL1031-10-10	09986	37A	77
AL1031-10-21	09986	37A	49
AL1031-10-23	09986	37A	48
AL1031-10-31	09986	37A	11
AL1031-10-31	09986	37A	22
AL1031-10-32	09986	37A	36
AL1031-12-00	09986	37A	2
AL1031-12-01	09986	37A	
AL1031-13-00	09986	37A	3
AL1031-13-01	09986	37A	
AL1031-15-10	09986	37A	88
AL1031-15-12	09986	37A	87
AL1031-15-40	09986	37A	89
AL1031-17-00	09986	37A	50
AL1031-18-00	09986	37A	51
AL1031-20-05	09986	37A	56
AL1031-20-05	09986	37A	84
AL1031-20-06	09986	37A	55
AL1031-20-06	09986	37A	81
AL1031-20-17	09986	37A	41A
AL1031-25-04	09986	37A	61
AL1031-25-14	09986	37A	43
AL1031-5	09986	37A	
AL1031-50-00	09986	37A	4
AL1031-50-15	09986	37A	5
AMF11-0172-1-2	93712	A14	6
AMF11-0172-1-3	93712	A3	7
AMF11-0172-1-4	93712	A3	8
AMS3195	81343	BULK	
AMS3195-125	81343	BULK	
AMS3195-188-500X25FT	81343	BULK	
AMS3195062X24X24	81343	BULK	
AMS3346-063X36X36	81343	BULK	
AM271-30	08844	21	65B
AM297-1-12	08844	18	91F
AM297-1-12	08844	18	98F
AM297-1-6	08844	18	91H
AM297-1-6	08844	18	98H
AM297-1-6	08844	275	14H
AM297-1-7	08844	18	91I
AM297-1-7	08844	18	98I
AM297-1-7	08844	275	14I
AM297-1-9	08844	18	91G
AM297-1-9	08844	18	98G
AM297-1-9	08844	275	14G
AM310D	61349	162	22
AND10133-0601	99237	BULK	
AND10133-0701	99237	BULK	
AND10133-1001	81348	BULK	
AND10133-1201	99237	BULK	
AND10133-1202	99237	BULK	
AND10133-1203	99237	BULK	
AND10133-2003	99237	BULK	
AND10134-0501	99237	BULK	
AND10134-1204	99237	BULK	
AND10134-1205	99237	BULK	
AND10134-1205QQA200-11T6FT	99237	BULK	
AND10134-1401	99237	BULK	
AND10134-1405	99237	BULK	
AND10134-1406	99237	BULK	
AND10134-1406QQ-A200-11T6	99237	BULK	
AND10134-1602	81348	BULK	
AND10134-2405	99237	BULK	
AND10135-1002	99237	BULK	
AND10135-1004	99237	BULK	
AND10136-1301	99237	BULK	
AND10136-1401	99237	BULK	
AND10136-1405	99237	BULK	
AND10136-1603	81348	BULK	
AND10136-2002	99237	BULK	
AND10136-2006	81348	BULK	
AND10136-2008	99237	BULK	
AND10136-2405	99237	BULK	
AND10136-2407QQA200-11T6	99237	BULK	
AND10136-3005	99237	BULK	
AND10137-1005	99237	BULK	
AND10137-2404	99237	BULK	
AND10137-2601	99237	BULK	
AND10138-0704	99237	BULK	
AND10138-0709	99237	BULK	
AND10138-1004	99237	BULK	
AND10138-1005	99237	BULK	
AND10138-2001	99237	BULK	
AND10139-0505	99237	BULK	
AND10139-0707	99237	BULK	
AND10139-1106	99237	BULK	
ANN1349W	61349	162	45
ANN1414C	61349	162	8
ANN1452D	61349	162	32
ANN1453	61349	162	29
ANN1453A	61349	162	26
ANN1455	61349	162	15
ANN1486	61349	162	40
ANQQS685-5	81352	BULK	
AN10H23	88044	BULK	
AN100-5	88044	60	
AN100-5	88044	61	
AN100C6	88044	60	
AN100C6	88044	61	
AN101218	88044	BULK	
AN101320	88044	BULK	
AN101348	88044	BULK	
AN102810	88044	BULK	
AN103806	88044	BULK	
AN104011	88044	76	114
AN104021	88044	KITS	
AN104021	88044	62	53
AN104712	88044	QC1	15
AN104712	88044	BULK	
AN104717	88044	162	4
AN106AK40	88044	263	5E
AN115C175	88044	60	
AN115C46	88044	60	11
AN115C46	88044	61	
AN115C46	88044	60	
AN115C61	88044	61	
AN115C61	88044	263	
AN116-5	88044	232	10
AN116914	88044	67A	46
AN116914	88044	232	13
AN116916	88044	BULK	
AN121658		125	4
AN122578		KITS	
AN122578		KITS	
AN122581	88044	125	6
AN122581	88044	265	214
AN122691	88044	268	221
AN122691	88044	BULK	
AN122691	88044	BULK	
AN122692	88044	265	283
AN122693	88044	268	246
AN122693	88044	73	28A
AN122704	88044	265	94
AN122705			

REFERENCE NUMBER	MFG CODE	FIG NUMBER	ITEM NUMBER
AN122705	88044	268	28
AN122705	88044	BULK	
AN122717	88044	265	209
AN122717	88044	265	298
AN122717	88044	268	232
AN122717	88044	268	259
AN122719	88044	265	126
AN122719	88044	268	132
AN122769	88044	BULK	
AN123856	88044	165	55
AN123856	88044	165	62
AN123866	88044	165	15
AN123959		KITS	
AN123959	88044	216	19
AN123961		KITS	
AN123961	88044	216	8
AN123967	88044	21	5A
AN123967	88044	KITS	
AN123975		KITS	
AN123975	88044	216	11
AN126294	88044	75	143
AN126294	88044	75	159
AN126294	88044	75	183
AN126295	88044	75	143
AN148557	88044	BULK	
AN150519	88044	76	51
AN150519	88044	80	21A
AN150520	88044	76	51
AN150520	88044	89	83
AN150521	88044	BULK	
AN150525	88044	80	19B
AN150525	88044	89	127A
AN150526	88044	80	19B
AN150526	88044	89	127A
AN150531	88044	89	36
AN150532	88044	76	142F
AN150820	88044	75	133
AN150821	88044	75	133
AN150832	88044	75	145
AN150832	88044	75	158
AN150832	88044	75	182
AN150833	88044	75	145
AN150838	88044	81	203
AN150838	88044	89	35
AN150838	88044	89	82
AN150851	88044	89	127
AN150862	88044	80	21
AN150863	88044	80	21
AN150868	88044	75	144
AN150868	88044	75	157
AN150869	88044	75	144
AN151006	88044	76	50
AN151007	88044	76	50
AN151132	88044	89	125
AN151133	88044	89	125
AN151145	88044	89	126
AN151168	88044	76	31A
AN151168	88044	80	17A
AN151168	88044	80	18A
AN151168	88044	80	20
AN151169	88044	76	31A
AN151180	88044	89	127B
AN151181	88044	89	127B
AN151744	88044	81	207
AN151744	88044	83	362
AN151745	88044	83	
AN152619	88044	76	51
AN152620	88044	76	51
AN154732	88044	88	33B
AN155944	88044	91	13
AN17H30	88044	245	18
AN173-11	88044	BULK	
AN173-13	88044	BULK	
AN173-4A	88044	BULK	
AN173-44A	88044	BULK	
AN173-5A	88044	BULK	
AN173CH13	88044	BULK	
AN173C13A	88044	270	32
AN173H10A	88044	228	79
AN173H11	88044	245	2C
AN173H11	88044	245	21
AN173H11	88044	246	6
AN173H11A	88044	BULK	
AN173H12	88044	245	2D
AN173H13	88044	228	25
AN173H14	88044	245	20
AN173H44A	88044	BULK	
AN173H6A	88044	BULK	
AN173H7	88044	BULK	
AN173H7A	88044	BULK	
AN174-10A	88044	BULK	
AN174-11A	88044	BULK	
AN174-12	88044	BULK	
AN174-12	88044	189A	
AN174-12A	88044	BULK	
AN174-13	88044	42B	53
AN174-14	88044	42A	15
AN174-14	88044	42B	73
AN174-14	88044	42C	16
AN174-14	88044	KITS	
AN174-15	88044	76	118B
AN174-15	88044	KITS	
AN174-15A	88044	76	118B
AN174-15A	88044	76	121
AN174-15A	88044	273	25
AN174-16	88044	BULK	
AN174-17	88044	223	92
AN174-20	88044	BULK	
AN174-20A	88044	BULK	
AN174-30	88044	BULK	
AN174-36	88044	BULK	
AN174-6A	88044	BULK	
AN174CH11A	88044	KITS	
AN174CH12A	88044	BULK	
AN174CH13A	88044	42B	73
AN174CH14A	88044	KITS	
AN174CH33A	88044	42B	33
AN174CH33A	88044	189A	
AN174C11	88044	QC1	36
AN174C11	88044	KITS	
AN174C12	88044	QC1	37
AN174C12	88044	BULK	
AN174C16A	88044	25	11
AN174C20	88044	KITS	
AN174C21A	88044	BULK	
AN174H10A	88044	33	1
AN174H10A	88044	222	23
AN174H11	88044	268	173
AN174H11A	88044	BULK	
AN174H12	88044	223	43
AN174H12	88044	42B	12
AN174H13	88044	222	5
AN174H13	88044	228	7
AN174H13A	88044	BULK	
AN174H14	88044	222	6
AN174H14	88044	223	44
AN174H14	88044	228	8
AN174H14A	88044	273	2
AN174H14A	88044	273	20
AN174H14A	88044	273	24
AN174H15	88044	222	7
AN174H15	88044	228	117

REFERENCE NUMBER	MFG CODE	FIG NUMBER	ITEM NUMBER
AN174H15	88044	228	127F
AN174H15	88044	228	15
AN174H15	88044	228	75
AN174H15	88044	228	9
AN174H15	88044	228	99
AN174H15A	88044	BULK	
AN174H16	88044	228	100
AN174H16	88044	228	69
AN174H16	88044	228	76
AN174H17	88044	228	51
AN174H20	88044	226	6
AN174H20	88044	228	10
AN174H20	88044	268	208
AN174H20A	88044	228	101
AN174H21	88044	222	40
AN174H21	88044	226	15
AN174H21	88044	237	21
AN174H21	88044	237	49
AN174H21	88044	244	15
AN174H21	88044	244	24
AN174H21	88044	246	2
AN174H21	88044	268	177
AN174H21	88044	428	13
AN174H21	88044	KITS	
AN174H22	88044	223	81
AN174H22A	88044	BULK	
AN174H23A	88044	BULK	
AN174H24	88044	228	32
AN174H24	88044	246	5
AN174H25A	88044	BULK	
AN174H26	88044	228	156
AN174H26	88044	228	172
AN174H26	88044	228	183
AN174H26	88044	228	52
AN174H26	88044	229	40
AN174H3	88044	BULK	
AN174H30	88044	228	157
AN174H31	88044	BULK	
AN174H31A	88044	BULK	
AN174H33A	88044	BULK	
AN174H34A	88044	BULK	
AN174H36	88044	228	61
AN174H36	88044	229	35
AN174H5A	88044	BULK	
AN174H6	88044	BULK	
AN174H6A	88044	222	
AN174H7A	88044	33	2
AN174H7A	88044	11A	86
AN174H7A	88044	222	22
AN174H70	88044	BULK	
AN175-10	88044	BULK	
AN175-67	88044	BULK	
AN175-7	88044	BULK	
AN175CH17	88044	BULK	
AN175C13A	88044	25	24
AN175C13A	88044	25	28
AN175C15A	88044	25	29
AN175C16A	88044	25	23
AN175C16A	88044	KITS	
AN175C17	88044	33	9
AN175C23	88044	BULK	
AN175H10	88044	42B	14
AN175H11	88044	238	5
AN175H12	88044	238	6
AN175H13	88044	BULK	
AN175H15	88044	BULK	
AN175H17	88044	BULK	
AN175H30	88044	BULK	
AN175H31	88044	BULK	
AN175H32	88044	KITS	
AN175H42	88044	BULK	

REFERENCE NUMBER	MFG CODE	FIG NUMBER	ITEM NUMBER
AN175H50	88044	BULK	
AN175H54	88044	BULK	
AN175H7	88044	428	46
AN176-10A	88044	BULK	
AN176-12A	88044	28	24M
AN176-24A	88044	BULK	
AN176C13	88044	KITS	
AN176C16	88044	KITS	
AN176C24	88044	KITS	
AN176C33	88044	KITS	
AN176H11	88044	238	3
AN176H16	88044	BULK	
AN176H21	88044	BULK	
AN176H34	88044	BULK	
AN176H35	88044	BULK	
AN176H36	88044	BULK	
AN176H53	88044	BULK	
AN176H63	88044	BULK	
AN177-26	88044	KITS	
AN177H27	88044	BULK	
AN177H30	88044	BULK	
AN177H34	88044	BULK	
AN177H37	88044	BULK	
AN177H54	88044	BULK	
AN178-23A	88044	62	17
AN178-25A	88044	62	6C
AN178C25A	88044	BULK	
AN178H20	88044	BULK	
AN178H23	88044	BULK	
AN178H33	88044	BULK	
AN178H47	88044	BULK	
AN180-37	88044	69	7
AN180-37	88044	70	22
AN180H65	88044	240	73
AN182C31	88044	45	6
AN182C31	88044	BULK	
AN182C32	88044	44	1
AN182C32	88044	45	6A
AN200KP8	88044	239	179
AN201KP4A	88044	226	8
AN201KP4A	88044	265	245
AN202KP21B	88044	239	161
AN21-12A	88044	BULK	
AN21-13	88044	223	94
AN22-17A	88044	BULK	
AN22-19A	88044	36B	9
AN22-19A	88044	37B	3
AN22-21A	88044	36A	7
AN22-22	88044	37B	4
AN22-22	88044	BULK	
AN22-23	88044	BULK	
AN22-23A	88044	37B	2
AN227-10	88044	16	46
AN227-10M	88044	BULK	
AN227-15S	88044	32	18
AN227-15S	88044	36	
AN227-16	88044	KITS	
AN227-21B	88044	BULK	
AN227-22B	88044	BULK	
AN227-22BM10	88044	18	161A
AN227-23	88044	34	
AN227-23	88044	37	44
AN227-23M10	88044	BULK	
AN227-24	88044	32	
AN227-49	88044	BULK	
AN227-51	88044	BULK	
AN227-52	88044	BULK	
AN227-6	88044	16	51
AN227-6	88044	19	12
AN227-6	88044	37A	1
AN227-6	88044	KITS	

REFERENCE NUMBER	MFG CODE	FIG NUMBER	ITEM NUMBER
AN227-7	88044	16	52
AN227-7	88044	19	
AN227-7	88044	37A	1
AN227-7	88044	KITS	
AN227-8	88044	19	
AN229-1AS16-1	88044	BULK	
AN229-2AS16-1	88044	BULK	
AN229-2AS171-1	88044	BULK	
AN229-2AS22-1	88044	BULK	
AN229-2AS48-1	88044	BULK	
AN229-2AS80-1	88044	BULK	
AN23-12	88044	BULK	
AN23-12A	88044	223	116
AN23-12A	88044	BULK	
AN23-13	88044	31	
AN23-13	88044	32	
AN23-13	88044	KITS	
AN23-13A	88044	KITS	
AN23-14	88044	223	115
AN23-14	88044	223	50
AN23-14	88044	229	1
AN23-15	88044	BULK	
AN23-16	88044	228	58
AN23-16	88044	KITS	
AN23-17	88044	BULK	
AN23-18	88044	15	9
AN23-18	88044	KITS	
AN23-22A	88044	BULK	
AN23-23A	88044	BULK	
AN23-25A	88044	BULK	
AN23-28A	88044	228	87
AN23-29A	88044	15	3
AN23-29A	88044	36	
AN23-29A	88044	37B	17
AN23-29A	88044	KITS	
AN23-30A	88044	37B	46
AN23-32	88044	37B	18
AN23-32	88044	BULK	
AN23-34A	88044	11	39
AN23-38A	88044	110	
AN23-46	88044	11	98
AN23-46A	88044	BULK	
AN24-10	88044	BULK	
AN24-10A	88044	31	25C
AN24-10A	88044	BULK	
AN24-13A	88044	KITS	
AN24-20	88044	15	
AN24-21	88044	15	17
AN24-21	88044	15	27
AN24-21	88044	KITS	
AN24-22	88044	22	25
AN24-22	88044	22	5
AN24-22	88044	76	160B
AN24-23	88044	33	44
AN24-23	88044	KITS	
AN24-26A	88044	15	21
AN24-28A	88044	37B	23
AN24-29A	88044	15	5
AN24-30	88044	235	2
AN25-15	88044	60	21
AN25-16	88044	BULK	
AN25-17	88044	F20	15
AN25-29	88044	22	6
AN25-29A	88044	22	12
AN253-2-3600	88044	BULK	
AN2552-3A	88044	204	26
AN256-10	88044	BULK	
AN256F8	88044	BULK	
AN26-12	88044	61	4
AN26-21	88044	61	16
AN26-23	88044	60	17
AN26-32	88044	15	7
AN297-1-12	88044	275	14F
AN3-10	88044	KITS	
AN3-10A	88044	92	21
AN3-10A	88044	92	79
AN3-10A	88044	279	
AN3-11	88044	62	12
AN3-11	88044	66	31
AN3-11	88044	QC1	21
AN3-11	88044	QC1	41
AN3-11	88044	KITS	
AN3-11A	88044	36A	41
AN3-11A	88044	36B	31
AN3-11A	88044	KITS	
AN3-12	88044	BULK	
AN3-12A	88044	116	
AN3-12A	88044	36A	12
AN3-12A	88044	36A	35
AN3-12A	88044	36B	14
AN3-13A	88044	37B	15
AN3-14A	88044	29	2A
AN3-14A	88044	F17	30
AN3-14A	88044	36A	30
AN3-14A	88044	36B	27
AN3-14A	88044	37B	16
AN3-14A	88044	KITS	
AN3-15A	88044	112	50
AN3-15A	88044	119	318
AN3-15A	88044	KITS	
AN3-16A	88044	81	5B
AN3-16A	88044	116	
AN3-16A	88044	KITS	
AN3-17A	88044	95	40
AN3-17A	88044	116	
AN3-17A	88044	KITS	
AN3-20A	88044	59	
AN3-20A	88044	KITS	
AN3-21A	88044	KITS	
AN3-4A	88044	F16	48
AN3-4A	88044	F16	5
AN3-4A	88044	221	111
AN3-4A	88044	270	62A
AN3-4A	88044	37A	94
AN3-4A	88044	KITS	
AN3-43A	88044	BULK	
AN3-5	88044	88	84C
AN3-5	88044	95	
AN3-5	88044	95	11
AN3-5	88044	257	2B
AN3-5A	88044	83	103
AN3-5A	88044	95	94A
AN3-5A	88044	F16	50
AN3-5A	88044	220	
AN3-5A	88044	221	31
AN3-5A	88044	37A	28
AN3-5A	88044	KITS	
AN3-6	88044	95	11
AN3-6	88044	F16	30
AN3-6	88044	280	13
AN3-6A	88044	76	1798
AN3-6A	88044	88	24C
AN3-6A	88044	95	167
AN3-6A	88044	37A	27
AN3-6A	88044	KITS	
AN3-7A	88044	18	
AN3-7A	88044	KITS	
AN3CH12A	88044	BULK	
AN3CH20A	88044	64A	3
AN3CH3	88044	270	2
AN3CH3A	88044	13	88
AN3CH3A	88044	64A	1

REFERENCE NUMBER	MFG CODE	FIG NUMBER	ITEM NUMBER
AN3CH4	88044	21	
AN3CH4	88044	21	14A
AN3CH4	88044	KITS	
AN3CH4A	88044	13	87
AN3CH4A	88044	62	50
AN3CH4A	88044	QC1	152
AN3CH4A	88044	KITS	
AN3CH5	88044	BULK	
AN3CH5A	88044	62	44
AN3CH5A	88044	QC1	
AN3CH5A	88044	QC1	150
AN3CH5A	88044	42C	1
AN3CH5A	88044	KITS	
AN3CH6	88044	BULK	
AN3CH6A	88044	21	14A
AN3CH6A	88044	21	16A
AN3CH6A	88044	42A	2
AN3C10	88044	KITS	
AN3C12A	88044	BULK	
AN3C15	88044	KITS	
AN3C20	88044	275	
AN3C20	88044	KITS	
AN3C23	88044	KITS	
AN3C27	88044	KITS	
AN3C27A	88044	183A	5
AN3C5A	88044	KITS	
AN3C6A	88044	BULK	
AN3C7	88044	BULK	
AN3H10	88044	BULK	
AN3H10A	88044	22	41D
AN3H10A	88044	76	177
AN3H10A	88044	89	117
AN3H10A	88044	95	151
AN3H10A	88044	229	12
AN3H10A	88044	KITS	
AN3H11	88044	BULK	
AN3H11A	88044	129	
AN3H11A	88044	37A	17
AN3H11A	88044	37A	7
AN3H11A	88044	KITS	
AN3H12	88044	BULK	
AN3H12A	88044	116	
AN3H12A	88044	245	14
AN3H13A	88044	BULK	
AN3H14	88044	BULK	
AN3H14A	88044	112	34
AN3H14A	88044	116	
AN3H14A	88044	119	157
AN3H14A	88044	257	15A
AN3H15	88044	BULK	
AN3H15A	88044	BULK	
AN3H16A	88044	116	
AN3H16A	88044	119	32
AN3H16A	88044	119	379
AN3H17	88044	BULK	
AN3H17A	88044	112	76
AN3H17A	88044	119	
AN3H17A	88044	129	
AN3H20A	88044	112	76
AN3H20A	88044	116	
AN3H20A	88044	119	
AN3H20A	88044	119	21
AN3H20A	88044	119	93
AN3H20A	88044	129	
AN3H21A	88044	119	47
AN3H21A	88044	139	112
AN3H21A	88044	KITS	
AN3H22	88044	BULK	
AN3H22A	88044	45	11A
AN3H22A	88044	112	47
AN3H22A	88044	117	
AN3H22A	88044	129	
AN3H22A	88044	KITS	
AN3H23A	88044	95	21
AN3H23A	88044	95	26
AN3H23A	88044	116	
AN3H23A	88044	119	295
AN3H23A	88044	26	11
AN3H24A	88044	207	
AN3H24A	88044	37A	26
AN3H24A	88044	95	22
AN3H26A	88044	112	
AN3H26A	88044	116	
AN3H26A	88044	116	
AN3H27A	88044	BULK	
AN3H3	88044	BULK	
AN3H3A	88044	BULK	
AN3H34A	88044	10	
AN3H4A	88044	28	
AN3H4A	88044	28	14F
AN3H4A	88044	117	
AN3H4A	88044	119	361
AN3H4A	88044	129	
AN3H4A	88044	213	
AN3H4A	88044	213	4
AN3H4A	88044	220	
AN3H4A	88044	221	32
AN3H4A	88044	221	33
AN3H4A	88044	221	36
AN3H4A	88044	221	41
AN3H4A	88044	221	56
AN3H4A	88044	221	57
AN3H4A	88044	221	69
AN3H4A	88044	251	45A
AN3H4A	88044	270	168
AN3H4A	88044	KITS	
AN3H43A	88044	109	77A
AN3H44A	88044	60	13
AN3H44A	88044	100	17
AN3H5A	88044	10	
AN3H5A	88044	20	
AN3H5A	88044	20	
AN3H5A	88044	20	31
AN3H5A	88044	20	57
AN3H5A	88044	129	
AN3H5A	88044	135	2
AN3H5A	88044	221	
AN3H5A	88044	245	25
AN3H5A	88044	246	11
AN3H5A	88044	246	14
AN3H6	88044	88	87
AN3H6A	88044	32	42
AN3H6A	88044	47	3
AN3H6A	88044	71	88
AN3H6A	88044	129	22A
AN3H6A	88044	129	23B
AN3H6A	88044	211	23
AN3H6A	88044	245	12
AN3H6A	88044	KITS	
AN3H7	88044	18	91D
AN3H7	88044	18	98D
AN3H7	88044	88	84D
AN3H7	88044	275	14D
AN3H7	88044	KITS	
AN3H7A	88044	20	88A
AN3H7A	88044	83	150B
AN30-32	88044	21	2
AN30-32	88044	KITS	
AN302-16-3	88044	BULK	
AN3033-10	88044	204	
AN3033-14	88044	204	28
AN3033-15	88044	204	29

REFERENCE NUMBER	MFG CODE	FIG NUMBER	ITEM NUMBER
AN3042-3	88044	204	
AN3042-4	88044	204	
AN3056-10	88044	BULK	
AN3056-3	88044	BULK	
AN3056-6	88044	BULK	
AN3056-8	88044	BULK	
AN3067S6	88044	190	13
AN3067W3	88044	190	14
AN31SC4R	88044	BULK	
AN310-10	88044	45	9
AN310-10	88044	69	6
AN310-10	88044	70	21
AN310-10	88044	240	75
AN310-12	88044	44	2
AN310-12	88044	45	1
AN310-12	88044	72	3
AN310-12	88044	72	37
AN310-12	88044	72	69
AN310-12	88044	75	45
AN310-12	88044	KITS	
AN310-16	88044	44	25F
AN310-16	88044	45	13A
AN310-3	88044	11	101
AN310-3	88044	18	91B
AN310-3	88044	18	98B
AN310-3	88044	62	9
AN310-3	88044	66	28
AN310-3	88044	88	84I
AN310-3	88044	88	87C
AN310-3	88044	QC1	21B
AN310-3	88044	QC1	41B
AN310-3	88044	266	11
AN310-3	88044	275	14B
AN310-3	88044	KITS	
AN310-4	88044	31	
AN310-4	88044	34	44
AN310-4	88044	F15	21
AN310-4	88044	QC1	37B
AN310-4	88044	154	6
AN310-4	88044	223	89
AN310-4	88044	42A	13
AN310-4	88044	42C	14
AN310-4	88044	KITS	
AN310-5	88044	24	7
AN310-5	88044	248	43
AN310-5	88044	KITS	
AN310-6	88044	75	14
AN310-6	88044	75	53
AN310-6	88044	222	98
AN310-6	88044	244	70
AN310-6	88044	KITS	
AN310-7	88044	BULK	
AN310-8	88044	59	20A
AN310-8	88044	75	14
AN310-8	88044	75	45
AN310-8	88044	F15	27
AN310-8	88044	F15	52
AN310-8	88044	222	61
AN310-8	96906	244	59
AN310-8	88044	KITS	
AN310-9	88044	75	53
AN310-9	8804.	263	11
AN310C5	88044	22	17B
AN310C5	88044	22	22C
AN310C5	88044	22	38
AN310C5	88044	22	6C
AN310C5	88044	137	12
AN310C5	88044	137	2
AN310C5	88044	KITS	
AN310C8	88044	BULK	
AN310C9	88044	34	32
AN3115-1	88044	BULK	
AN3116-2	88044	BULK	
AN315-3R	88044	209	
AN315-3R	88044	210	89
AN315-3R	88044	265	12
AN315-3R	88044	268	79
AN315-4R	88044	210	55
AN315-4R	88044	197A	18
AN315-5R	88044	235	15
AN315-6R	88044	15	
AN315-6R	88044	15	12
AN315-6R	88044	207	
AN315-6R	88044	238	12
AN315-6R	88044	KITS	
AN315-640R	88044	BULK	
AN315-8R	88044	F20	21
AN315C3R	88044	270	37A
AN315C3R	88044	KITS	
AN315C4R	88044	KITS	
AN315C5R	88044	BULK	
AN315D10R	88044	20	51
AN315D3R	88044	16	50A
AN315D3R	88044	19	10
AN315D3R	88044	28	34
AN3156-3	88044	207	15
AN3156-3	88044	208	17
AN3156-3	88044	KITS	
AN316-10R	88044	240	
AN316-4R	88044	11	45
AN316-4R	88044	11	46
AN316-4R	88044	15	33
AN316-4R	88044	16	30
AN316-4R	88044	20	
AN316-4R	88044	20	63
AN316-4R	88044	22	56
AN316-4R	88044	25	
AN316-4R	88044	207	
AN316-4R	88044	208	22
AN316-4R	88044	210	21
AN316-4R	88044	210	59
AN316-4R	88044	KITS	
AN316-5R	88044	11	106
AN316-5R	88044	11	50
AN316-5R	88044	20	
AN316-5R	88044	20	30
AN316-5R	88044	20	55
AN316-5R	88044	119	167
AN316-5R	88044	222	
AN316-5R	88044	223	
AN316-5R	88044	234	2
AN316-5R	88044	234	23
AN316-5R	88044	234	40
AN316-5R	88044	234	49
AN316-5R	88044	234	5
AN316-5R	88044	234	52
AN316-5R	88044	244	
AN316-5R	88044	KITS	
AN316-6	88044	11	103
AN316-6	88044	16	5
AN316-6L	88044	20	66
AN316-6R	88044	11	43
AN316-6R	88044	11	93
AN316-6R	88044	15	23
AN316-6R	88044	20	66
AN316-6R	88044	210	28
AN316-6R	88044	210	31
AN316-6R	88044	222	
AN316-6R	88044	223	
AN316-6R	88044	228	
AN316-6R	88044	228	20
AN316-6R	88044	237	27

REFERENCE NUMBER	MFG CODE	FIG NUMBER	ITEM NUMBER
AN316-6R	88044	237	55
AN316-6R	88044	240	
AN316-6R	88044	243	
AN316-6R	88044	244	
AN316-6R	88044	273	22B
AN316-6R	88044	273	29A
AN316-6R	88044	239	
AN316-7R	88044	11	40
AN316-8R	88044	25	14
AN316-8R	88044	239	
AN316-8R	88044	KITS	
AN316-8R	88044	75	36
AN316C12R	88044	BULK	
AN316C14L	88044	BULK	
AN316C14R	88044	66	10
AN316C5R	88044	66	19
AN316C5R	88044	BULK	
AN316C5R	88044	BULK	
AN316C6R	88044	KITS	
AN316C6R	88044	BULK	
AN32-58	88044	269	8C
AN32-58A	88044	BULK	
AN32-66	88044	269	17
AN32-66A	88044	270	61H
AN32-66A	88044	44	18A
AN320-10	88044	45	14
AN320-10	88044	72	3
AN320-12	88044	72	37
AN320-12	88044	72	69
AN320-12	88044	75	45
AN320-12	88044	94	7
AN320-12	88044	222	186
AN320-16	88044	222	66
AN320-16	88044	238	15
AN320-16	88044	BULK	
AN320-20	88044	71	118
AN320-3	88044	76	54
AN320-3	88044	223	107
AN320-3	88044	428	17
AN320-3		KITS	
AN320-4	88044	16	6B
AN320-4	88044	24	2B
AN320-4	88044	24	6B
AN320-4	88044	33	44B
AN320-4	88044	59	11
AN320-4	88044	76	160A
AN320-4	88044	428	
AN320-4	88044	428	51
AN320-4	88044	428	62
AN320-4	88044	428	7
AN320-4	88044	60	20
AN320-5	88044	71	128
AN320-5	88044	223	102
AN320-5	88044	428	44
AN320-5	88044	428	8
AN320-5	88044	KITS	
AN320-6	88044	45	10A
AN320-6	88044	45	11
AN320-6	88044	49	30
AN320-6	88044	60	16
AN320-6	88044	61	14
AN320-6	88044	61	2
AN320-6	88044	75	14
AN320-6	88044	75	53
AN320-6	88044	75	63
AN320-6	88044	223	161
AN320-6	88044	KITS	
AN320-7	88044	34	37
AN320-7	88044	222	50
AN320-7	88044	244	44
AN320-7	88044	KITS	

REFERENCE NUMBER	MFG CODE	FIG NUMBER	ITEM NUMBER
AN320-8	88044	34	48
AN320-8	88044	75	14
AN320-8	88044	75	45
AN320-8	88044	F15	6
AN320-8	88044	222	167
AN320-8	88044	222	181
AN320-8	88044	222	192
AN320-8	88044	222	203
AN320-8	88044	222	61
AN320-8	88044	222	71
AN320-8	88044	222	88
AN320-8	88044	222	98
AN320-8	88044	244	59
AN320-8	88044	244	70
AN320-8	88044	244	87
AN320-8	88044	244	98
AN320-8	88044	KITS	
AN320-8		KITS	
AN320-9	88044	49	32A
AN320-9	88044	51	25C
AN320-9	88044	75	53
AN320-9	88044	238	47
AN320-9	88044	239	51
AN320-9	88044	KITS	
AN320C4	88044	21	23B
AN320C4	88044	KITS	
AN320C6	88044	49	56A
AN320C6	88044	51	73
AN320C7	88044	49	50
AN320C8	88044	45	29D
AN3335-1	88044	198	31
AN3370-1	88044	209	31
AN3380-1	88044	209	30
AN364-624	88044	60	
AN364-624	88044	61	
AN364-640A	88044	BULK	
AN364-836A	88044	36A	6
AN364-836A	88044	36B	8
AN364-836A	88044	37B	1
AN365-428C	88044	135	17
AN365D420A	88044	71	37
AN381-2-12	88044	239	94
AN381-2-12	88044	KITS	
AN381-2-8	88044	KITS	
AN381-3-12	88044	KITS	
AN381-3-14	88044	239	38
AN381-3-14	88044	239	72
AN381-3-14	88044	239	83
AN381-4-12	88044	239	19
AN381-4-12	88044	239	90
AN381-4-24		KITS	
AN386-1-10	88044	BULK	
AN386-1-11	88044	42B	19
AN386-1-6A	88044	20	41
AN386-1-8A	88044	20	82
AN386-1-8A	88044	20	95
AN4-10A	88044	218	1
AN4-10A	88044	218	11
AN4-10A	88044	218	36
AN4-10A	88044	218	46
AN4-10A	88044	218	6
AN4-10A	88044	219A	126
AN4-10A	88044	219A	21
AN4-10A	88044	11	143
AN4-11A	88044	11	147
AN4-11A	88044	28	24T
AN4-11A	88044	139	
AN4-11A	88044	218	36A
AN4-11A	88044	37A	101
AN4-11A	88044	219A	11
AN4-11A	88044	219A	116

REFERENCE NUMBER	MFG CODE	FIG NUMBER	ITEM NUMBER
AN4-13	88044	34	44
AN4-13	88044	F15	24
AN4-13A	88044	37A	90
AN4-14A	88044	61	24
AN4-14A	88044	F17	12
AN4-14A	88044	F17	19
AN4-15A	88044	37A	44
AN4-15A	88044	37A	62
AN4-16A	88044	BULK	
AN4-17	88044	KITS	
AN4-20A	88044	KITS	
AN4-21A	88044	15	8
AN4-21A	88044	11A	13
AN4-22A	88044	KITS	
AN4-23A	88044	229	22
AN4-23A	88044	BULK	
AN4-24A	88044	BULK	
AN4-27A	88044	KITS	
AN4-4A	88044	37	1
AN4-4A	88044	KITS	
AN4-4A	88044	219A	121
AN4-4A	88044	219A	16
AN4-5A	88044	18	106
AN4-5A	88044	18	57
AN4-5A	88044	83	61
AN4-5A	88044	95	
AN4-5A	88044	95	113A
AN4-5A	88044	95	178A
AN4-5A	88044	95	38A
AN4-5A	88044	211	21
AN4-5A	88044	218	31
AN4-5A	88044	219	23
AN4-5A	88044	219	44
AN4-5A	88044	219	69
AN4-5A	88044	219	91
AN4-5A	88044	229	27
AN4-5A	88044	KITS	
AN4-6A	88044	13	38
AN4-6A	88044	13	66
AN4-6A	88044	13	8
AN4-6A	88044	37	35C
AN4-6A	88044	F16	11
AN4-6A	88044	F16	41
AN4-6A	88044	F16	44
AN4-6A	88044	F16	8
AN4-6A	88044	218	12B
AN4-6A	88044	218	17
AN4-6A	88044	218	53
AN4-6A	88044	218	8A
AN4-6A	88044	219	10
AN4-6A	88044	219	20
AN4-6A	88044	219	48
AN4-6A	88044	219	61
AN4-6A	88044	219	65
AN4-6A	88044	219	95
AN4-6A	88044	258	11C
AN4-6A	88044	284	40
AN4-6A	88044	285	30
AN4-6A	88044	KITS	
AN4-6A	88044	219A	132
AN4-6A	88044	219A	142
AN4-6A	88044	219A	161
AN4-6A	88044	219A	30
AN4-6A	88044	219A	41
AN4-6A	88044	219A	56
AN4-7	88044	KITS	
AN4-7A	88044	11	144
AN4-7A	88044	11	148
AN4-7A	88044	76	126A
AN4-7A	88044	QC1	4
AN4-7A	88044	11C	15
AN4-7A	88044	218	1
AN4-7A	88044	218	41
AN4-7A	88044	219	
AN4-7A	88044	219	35
AN4-7A	88044	249	1
AN4-7A	88044	37A	13
AN4-7A	88044	37A	68
AN4-7A	88044	KITS	
AN4-7A	88044	219A	1
AN4-7A	88044	219A	106
AN4CH10	88044	21	
AN4CH12A	88044	18	
AN4CH13	88044	BULK	
AN4CH15A	88044	32	58A
AN4CH15A	88044	KITS	
AN4CH16A	88044	25	16
AN4CH16A	88044	275	
AN4CH16A	88044	KITS	
AN4CH17A	88044	218	
AN4CH17A	88044	218	27
AN4CH21	88044	31	17A
AN4CH21A	88044	25	2
AN4CH31A	88044	BULK	
AN4CH40	88044	31	
AN4CH62	88044	BULK	
AN4CH7A	88044	22	
AN4C11A	88044	25	33
AN4C11A	88044	KITS	
AN4C15A	88044	BULK	
AN4C17A	88044	KITS	
AN4C21	88044	BULK	
AN4C23A	88044	KITS	
AN4C3A	88044	BULK	
AN4C3A	88044	219A	164
AN4C3A	88044	219A	59
AN4C30A	88044	KITS	
AN4C34A	88044	KITS	
AN4C4A	88044	KITS	
AN4C40	88044	31	17
AN4C40	88044	KITS	
AN4C5A	88044	219A	164
AN4C5A	88044	219A	59
AN4C6	88044	BULK	
AN4C60	88044	270	45
AN4C7A	88044	BULK	
AN4H10	88044	BULK	
AN4H10A	88044	37	1
AN4H10A	88044	135	15
AN4H10A	88044	139	
AN4H10A	88044	211	1
AN4H10A	88044	211	32
AN4H10A	88044	211	41A
AN4H10A	88044	211	6
AN4H10A	88044	219	
AN4H10A	88044	219	39
AN4H10A	88044	219	4
AN4H10A	88044	219	55
AN4H10A	88044	219	80
AN4H10A	88044	226	25
AN4H10A	88044	265	5
AN4H10A	88044	268	2
AN4H11A	88044	KITS	
AN4H12A	88044	25	
AN4H12A	88044	17	11
AN4H12A	88044	17	6
AN4H12A	88044	20	23
AN4H12A	88044	20	48
AN4H12A	88044	118	95
AN4H13	88044	KITS	
AN4H13A	88044	BULK	
	88044	BULK	

REFERENCE NUMBER	MFG CODE	FIG NUMBER	ITEM NUMBER
AN4H14A	88044	37	14
AN4H14A	88044	81	151
AN4H15A	88044	BULK	
AN4H16A	88044	257	19A
AN4H17	88044	24	2
AN4H17	88044	KITS	
AN4H17A	88044	112	39
AN4H17A	88044	213	
AN4H17A	88044	221	
AN4H17A	88044	257	19A
AN4H20A	88044	20	34
AN4H20A	88044	KITS	
AN4H21A	88044	117	
AN4H21A	88044	119	271
AN4H21A	88044	129	
AN4H22A	88044	36	12A
AN4H23A	88044	228	112
AN4H24A	88044	36	11
AN4H24A	88044	83	323
AN4H24A	88044	228	41
AN4H25A	88044	20	59
AN4H25A	88044	81	175
AN4H25A	88044	265	309
AN4H25A	88044	268	261
AN4H26A	88044	109	58A
AN4H26A	88044	109	61A
AN4H26A	88044	119	227
AN4H26A	88044	240	24
AN4H26A	88044	KITS	
AN4H27A	88044	119	375
AN4H27A	88044	KITS	
AN4H3A	88044	207	
AN4H30A	88044	71	79
AN4H30A	88044	109	13A
AN4H30A	88044	109	54A
AN4H30A	88044	119	329
AN4H31A	88044	BULK	
AN4H33	88044	KITS	
AN4H33A	88044	BULK	
AN4H34	88044	BULK	
AN4H34	88044	KITS	
AN4H34A	88044	228	113
AN4H37A	88044	BULK	
AN4H4	88044	208	37
AN4H4A	88044	29	
AN4H4A	88044	QC1	31
AN4H4A	88044	117	
AN4H4A	88044	129	
AN4H4A	88044	273	4
AN4H4A	88044	KITS	
AN4H43A	88044	BULK	
AN4H47A	88044	BULK	
AN4H5	88044	89	92
AN4H5A	88044	76	145
AN4H5A	88044	265	48
AN4H5A	88044	268	10
AN4H5A	88044	KITS	
AN4H6	88044	31	
AN4H6	88044	208	24
AN4H6A	88044	31	
AN4H6A	88044	F17	24
AN4H6A	88044	F17	6
AN4H6A	88044	119	124
AN4H6A	88044	139	
AN4H6A	88044	207	
AN4H6A	88044	211	19
AN4H6A	88044	211	50
AN4H6A	88044	265	276
AN4H6A	88044	265	46
AN4H6A	88044	265	59
AN4H6A	88044	268	240

REFERENCE NUMBER	MFG CODE	FIG NUMBER	ITEM NUMBER
AN4H6A	88044	268	30
AN4H6A	88044	268	9
AN4H6A	88044	KITS	
AN4H7	88044	24	1
AN4H7	88044	24	6
AN4H7	88044	76	8
AN4H7	88044	89	93
AN4H7	88044	KITS	
AN4H7	88044	31	
AN4H7A	88044	81	149
AN4H7A	88044	119	
AN4H7A	88044	211	12
AN4H7A	88044	211	37
AN4H7A	88044	213	
AN4H7A	88044	220	
AN4H7A	88044	265	185
AN4H7A	88044	265	275
AN4H7A	88044	265	4
AN4H7A	88044	268	230A
AN4H7A	88044	268	239
AN4H7A	88044	268	3
AN4H7A	88044	278	
AN415-1-2	88044	11	63
AN415-2	88044	211	
AN415-2	88044	218	
AN415-2	88044	219	
AN415-2	88044	KITS	
AN42-12	88044	BULK	
AN42BC15	88044	KITS	
AN42BC3	88044	11	133B
AN42BC5	88044	BULK	
AN42B11	88044	36A	38
AN42B15	88044	223	110
AN42B3	88044	62	
AN42B3	88044	KITS	
AN42B4	88044	BULK	
AN426AD4-3	88044	BULK	
AN43BC10A	88044	270	30
AN43BC11A	88044	BULK	
AN43BC13A	88044	BULK	
AN43BC5A	88044	33	39
AN43BC5A	88044	KITS	
AN43B12	88044	378	34
AN44C54	88044	BULK	
AN46-17	88044	BULK	
AN46-30	88044	BULK	
AN461-4-16	88044	BULK	
AN47-14	88044	60	23
AN47-27	88044	BULK	
AN47SPL	88044	61	21
AN490HT6P	88044	BULK	
AN490HT8P	88044	25	
AN5-10A	88044	BULK	
AN5-12A	88044	11	128
AN5-12A	88044	KITS	
AN5-14A	88044	KITS	
AN5-30A	88044	KITS	
AN5-7A	88044	60	3
AN5-7A	88044	61	7
AN5C11A	88044	KITS	
AN5C16A	88044	22	36
AN5C21	88044	22	17
AN5C21	88044	22	22
AN5C31	88044	22	3
AN5C31	88044	KITS	
AN5C410	88044	BULK	
AN5H10	88044	59	78
AN5H10	88044	264	1
AN5H11	88044	21	

REFERENCE NUMBER	MFG CODE	FIG NUMBER	ITEM NUMBER
AN5H12	88044	11	87
AN5H12	88044	22	41
AN5H12	88044	24	7
AN5H12	88044	87	14
AN5H13	88044	25	
AN5H14	88044	33	
AN5H14	88044	QC1	2
AN5H14	88044	KITS	
AN5H15	88044	87	11
AN5H17	88044	22	41A
AN5H20	88044	21	59
AN5H21	88044	21	53
AN5H21	88044	81	142
AN5H21	88044	83	286
AN5H27A	88044	42A	26
AN5H27A	88044	42C	27
AN5H30	88044	92	3
AN5H30	88044	92	61
AN5H30	88044	KITS	
AN5H32	88044	83	279
AN5H32	88044	87	8
AN5H40	88044	264	108
AN5H5	88044	129	
AN5H5A	88044	81	155
AN5H5A	88044	118	78
AN5H5A	88044	KITS	
AN5H7A	88044	118	78
AN5H7A	88044	BULK	
AN500-2-3		KITS	
AN500AC4-3	88044	78	1
AN500AD4-5		KITS	
AN500AD5-5	88044	64A	20
AN500A10-22	88044	215	1
AN500A2-3		230	19
AN500A2-3		KITS	
AN500A2-4		231	38
AN500A2-4		KITS	
AN500A2-7		KITS	
AN500A2-8	88044	232	17
AN500A3-3	88044	76	179H
AN500A3-3	88044	81	130
AN500A3-3	88044	83	375
AN500A3-3	88044	89	129
AN500A4-10		231	22
AN500A4-10		KITS	
AN500A4-12		KITS	
AN500A4-14	88044	192	97
AN500A4-3		KITS	
AN500A4-4		230	15A
AN500A4-4		230	20
AN500A4-4		231	10
AN500A4-4		231	59
AN500A4-4		KITS	
AN500A4-5		KITS	
AN500A4-7		231	115
AN500A4-7		KITS	
AN500A4-8		KITS	
AN500A4-8	88044	231	19
AN500A4-8	88044	262	17
AN500A416-6		KITS	
AN500A6-3		KITS	
AN500A6-7	88044	252	11
AN500A8-28	88044	265	21
AN500A8-28	88044	268	157
AN500A8-28	88044	268	55
AN500A8-6		KITS	
AN501AD616-22	88044	BULK	
AN501A10-10		KITS	
AN501A10-5		KITS	
AN501A10-8		KITS	
AN501A416-22	88044	76	156A
AN501B1-2	88044	160	13
AN501B1-2	88044	160	70
AN501B1-6	88044	160	66
AN501B1-6	88044	160	83
AN502-10-10	81352	BULK	
AN502-10-12	88044	71	51A
AN502-10-12	88044	QC1	
AN502-10-14	88044	261	23
AN502-10-16	88044	BULK	
AN502-10-22	88044	76	169A
AN502-10-26	88044	BULK	
AN502-10-4	88044	BULK	
AN502-10-6	88044	59	23
AN502-10-6	88044	59	3
AN502-10-6	88044	66	33
AN502-10-6	88044	66	36
AN502-10-6	88044	QC1	
AN502-10-6	88044	QC1	159
AN502-10-6	88044	259	11
AN502-10-6	88044	265	128
AN502-10-6	88044	268	105
AN502-10-8	88044	KITS	
AN502-10-8		KITS	
AN502-10-8	88044	66	33
AN502-10-8	88044	66	36
AN502-10-8	88044	94	12
AN502-10-8	88044	QC1	160
AN502-10-8	88044	QC1	44
AN502-10-8	88044	111	2
AN502-10-8	88044	132	21
AN502-10-8	88044	132	30
AN502-10-8	88044	151	1
AN502-10-8	88044	259	15B
AN502-10-8	88044	261	17
AN502-10-8	88044	261	35
AN502-10-8	88044	262	45
AN502-10-8	88044	262	6
AN502-10-8	88044	265	99
AN502-10-8	88044	268	118
AN502-416-14	88044	KITS	
AN502-416-22	88044	BULK	
AN503-10-18	88044	BULK	
AN503-416-16	88044	BULK	
AN503-6-4	88044	26	2
AN503-6-4		KITS	
AN503-6-4	88044	122	6
AN503-6-4	88044	234	24
AN503-6-4	88044	234	30
AN503-6-6		KITS	
AN503-6-6	88044	121	2
AN503-6-6	88044	132	5
AN503-6-6	88044	146	11
AN503-6-6	88044	184	8
AN503-6-6	88044	272	1
AN503-6-6	88044	272	37
AN503-6-6	88044	150A	13
AN503-6-8	88044	260	10
AN503-6-8	88044	268	158D
AN503-6-8	88044	150A	1
AN503-8-12		KITS	
AN503-8-12	88044	230	28
AN503-8-12	88044	231	66
AN503-8-14	88044	252	8
AN503-8-4	88044	210	99
AN503-8-4	88044	234	3
AN503-8-4	88044	234	38
AN503-8-4	88044	234	50
AN503-8-6		KITS	
AN503-8-6	88044	83	35D
AN503-8-6	88044	94	3
AN503-8-6	88044	120	13

REFERENCE NUMBER	MFG CODE	FIG NUMBER	ITEM NUMBER
AN503-8-6	88044	120	3
AN503-8-6	88044	215	21
AN503-8-6	88044	215	51
AN503-8-6	88044	216	33A
AN503-8-6	88044	216	36
AN503-8-6	88044	265	133
AN503-8-6	88044	268	88
AN503-8-6		KITS	
AN503-8-8	88044	26	28
AN503-8-8	88044	252	13
AN503-8-8	88044	275	
AN503-8-8	88044	231	21
AN505-4-18		KITS	
AN505-4-18		230	75
AN505-4-22		231	117
AN505-4-22		KITS	
AN505-4-22		KITS	
AN505-4-3		KITS	
AN505-4-4	88044	230	75
AN505-4R22	88044	231	117
AN505-4R22	88044	225	19
AN505-5R18	88044	225	22
AN505-5R5		KITS	
AN505-8R13		KITS	
AN505-8R18	88044	230	26
AN505-8R18	88044	231	68
AN505-8R18		KITS	
AN505-8R20	88044	96	23
AN505C3-3		KITS	
AN505C6-5		KITS	
AN507-440R24		KITS	
AN507-440R4		230	17
AN507-632R16		KITS	
AN507-632R16		KITS	
AN507C4-14		KITS	
AN507C440-8	88044	BULK	
AN507C640R10			
AN509C416R58	88044	BULK	
AN509C416R81	88044	BULK	
AN509DD146R35	88044	21	27A
AN509DD146R48	88044	21	27C
AN509DD416R43	88044	21	27B
AN510B8-4	88044	BULK	
AN515-2-16	88044	265	161
AN515-4R22	88044	BULK	
AN515-5R10	88044	205	42
AN515-6R7	88044	BULK	
AN515-8R22	88044	BULK	
AN515B6R18	88044	157	21
AN515B6R18	88044	157	30
AN515B6R18	88044	157	35
AN515B6R18	88044	157	47
AN515B6R18	88044	157	53
AN515B6R18	88044	157	59
AN515B6R18	88044	158	23
AN515B6R18	88044	158	30
AN515B6R18	88044	158	42
AN515B6R18	88044	158	48
AN515B6R18	88044	158	54
AN515B6R18	88044	KITS	
AN515C6R28	88044	KITS	
AN515C8R18	88044	228	129E
AN515C8R22	88044	BULK	
AN520-10R26	88044	95	6
AN520-10R26	88044	110	67
AN520-10R26	88044	110	99
AN520-10R26	88044	115	
AN520-10R26	88044	117	
AN520-10R26	88044	119	
AN520-10R26	88044	129	
AN520-10R26	88044	179	43
AN520-10R26	88044	196	37
AN520-10R26	88044	204	24
AN520-10R26	88044	221	24
AN520-10R26	88044	258	11B
AN520-10R30	88044	119	
AN520-10R60	88044	BULK	
AN520-10R64	88044	191	7
AN520-10R68	88044	191	39
AN520-3R4	88044	BULK	
AN520-3R5	88044	BULK	
AN520B1-2	88044	160	86
AN520B10R18	88044	157	38
AN520B10R18	88044	158	35
AN520DD10R18	88044	BULK	
AN520DD10R6	88044	BULK	
AN52010R64	88044	195	
AN52010R64	88044	195	26
AN525-10R1A	88044	257	10A
AN525-10R10	88044	10	
AN525-10R10	88044	10	
AN525-10R10	88044	10	
AN525-10R10	88044	10	
AN525-10R10	88044	10	
AN525-10R10	88044	15	48
AN525-10R10	88044	16	
AN525-10R10	88044	16	13
AN525-10R10	88044	17	13
AN525-10R10	88044	18	146
AN525-10R10	88044	24	22
AN525-10R10	88044	32	
AN525-10R10	88044	33	16
AN525-10R10	88044	33	23
AN525-10R10	88044	33	26
AN525-10R10	88044	75	6
AN525-10R10	88044	11B	111
AN525-10R10	88044	188	
AN525-10R10	88044	196	
AN525-10R10	88044	255	
AN525-10R10	88044	255	11A
AN525-10R10	88044	255	16B
AN525-10R10	88044	256	19
AN525-10R10	88044	256	21
AN525-10R10	88044	263	27A
AN525-10R10	88044	271	18
AN525-10R10	88044	271	19
AN525-10R10	88044	KITS	
AN525-10R12	88044	10	
AN525-10R12	88044	20	
AN525-10R12	88044	25	7
AN525-10R12	88044	31	
AN525-10R12	88044	33	15
AN525-10R12	88044	11C	70
AN525-10R12	88044	255	
AN525-10R12	88044	264	5C
AN525-10R12	88044	KITS	
AN525-10R14	88044	20	8
AN525-10R14	88044	34	
AN525-10R14	88044	178	144
AN525-10R14	88044	256	21
AN525-10R14	88044	257	22D
AN525-10R16	88044	16	10
AN525-10R16	88044	20	9
AN525-10R16	88044	22	
AN525-10R16	88044	32	53
AN525-10R16	88044	257	10C
AN525-10R16	88044	KITS	
AN525-10R18	88044	223	72
AN525-10R18	88044	KITS	
AN525-10R20		KITS	
AN525-10R20	88044	20	36
AN525-10R20	88044	230	4

REFERENCE NUMBER	MFG CODE	FIG NUMBER	ITEM NUMBER
AN525-10R20	88044	231	2
AN525-10R24	88044	33	10
AN525-10R26	88044	BULK	
AN525-10R27	88044	34	
AN525-10R27	88044	KITS	
AN525-10R28	88044	263	24B
AN525-10R32	88044	BULK	
AN525-10R32	88044	KITS	
AN525-10R6	88044	10	
AN525-10R6	88044	34	
AN525-10R6	88044	270	28
AN525-10R6	88044	270	61E
AN525-10R7	88044	F16	2
AN525-10R7	88044	178	70
AN525-10R7	88044	257	10B
AN525-10R7	88044	BULK	
AN525-10R7	88044	KITS	
AN525-10R8	88044	10	
AN525-10R8	88044	13	14
AN525-10R8	88044	13	36
AN525-10R8	88044	15	39
AN525-10R8	88044	16	24
AN525-10R8	88044	18	
AN525-10R8	88044	28	36
AN525-10R8	88044	31	
AN525-10R8	88044	32	
AN525-10R8	88044	32	
AN525-10R8	88044	34	
AN525-10R8	88044	34	
AN525-10R8	88044	36	
AN525-10R8	88044	QC1	
AN525-10R8	88044	129	23H
AN525-10R8	88044	251	11
AN525-10R8	88044	251	3
AN525-10R8	88044	251	34
AN525-10R8	88044	251	47
AN525-10R8	88044	253	1
AN525-10R8	88044	255	18
AN525-10R8	96906	255	10B
AN525-10R8	88044	255	11B
AN525-10R8	88044	255	18
AN525-10R8	88044	256	22B
AN525-10R8	88044	259	15C
AN525-10R8	88044	259	6A
AN525-10R8	88044	281	
AN525-10R8	88044	KITS	
AN525-10R9	88044	KITS	
AN525-416-12	88044	10	
AN525-416R10	88044	10	
AN525-416R10	88044	10	
AN525-416R10	88044	10	
AN525-416R10	88044	15	43
AN525-416R10	88044	18	147
AN525-416R11	88044	10	
AN525-416R11	88044	KITS	
AN525-416R14	88044	15	28B
AN525-416R14	88044	15	36
AN525-416R20	88044	268	203
AN525-416R26	88044	10	
AN525-416R26	88044	10	
AN525-416R26	88044	10	
AN525-416R26	88044	10	
AN525-416R28	88044	BULK	
AN525-416R8	88044	10	
AN525-8R6	88044	BULK	
AN525-8R7	88044	255	20
AN525-8R8	88044	39	
AN525-8R8	88044	42	2A
AN525-832R10	88044	167	11
AN525-832R10	88044	KITS	
AN525-832R12	88044	BULK	

REFERENCE NUMBER	MFG CODE	FIG NUMBER	ITEM NUMBER
AN525-832R14	88044	34	
AN525-832R14	88044	253	41
AN525-832R14	88044	255	2C
AN525-832R16	88044	BULK	
AN525-832R18	88044	BULK	
AN525-832R6	88044	255	12A
AN525-832R6	88044	255	15A
AN525-832R8	88044	10	1A
AN525-832R8	88044	18	
AN525-832R8	88044	31	
AN525-832R8	88044	11C	64B
AN525-832R8	88044	253	4A
AN525-832R8	88044	255	16C
AN525-832R8	88044	KITS	
AN525D10R10	88044	BULK	
AN525D10R11	88044	BULK	
AN525D10R12	88044	BULK	
AN525D10R18	88044	BULK	
AN525D10R20	88044	BULK	
AN525D10R8	88044	18	
AN525D10R8	88044	21	10
AN525D10R9	88044	BULK	
AN525D416R12	88044	BULK	
AN525D416R14	88044	BULK	
AN525D832R12	88044	BULK	
AN526-1032-8	88044	81	8A
AN526-632R18	88044	157	46
AN526-632R18	88044	158	41
AN526-632R18	88044	205	15
AN526-632R36	88044	210	77
AN526-832R18	88044	277	
AN526DD632-3		231	119
AN526DD632-3		KITS	
AN535-00-2		KITS	
AN5534-2	88044	182	25
AN5538-1	88044	BULK	
AN5538-2	88044	BULK	
AN565A4H6	88044	BULK	
AN565A6H5	88044	229	7
AN565A6H5	88044	245	8
AN565A8H5	88044	246	
AN565A845	88044	KITS	
AN565D2H5	88044	BULK	
AN565D5H3	88044	205	19
AN565D5H3	88044	205	36
AN565E1032H4	88044	144	14
AN5743L2	88044	157	45
AN5743T1A	88044	157	45
AN5760-4B	88044	157	57
AN5760-4B	88044	158	52
AN5760L4B	88044	157	57
AN5760L4B	88044	158	52
AN5813-2	88044	178	101
AN5813-2	88044	178	66
AN6-10A	88044	76	126A
AN6-11A	88044	43	13F
AN6-12A	88044	BULK	
AN6-13A	88044	BULK	
AN6-14	88044	F20	6
AN6-14A	88044	11	60
AN6-20	88044	BULK	
AN6-22A	88044	55	12
AN6-31	88044	92	6
AN6-7A	88044	F18	22
AN6CH16	88044	BULK	
AN6CH34A	88044	49	48A
AN6CH37	88044	BULK	
AN6CH5	88044	BULK	
AN6CH7A	88044	45	16
AN6CH7A	88044	KITS	
AN6C12A	88044	263	2

REFERENCE NUMBER	MFG CODE	FIG NUMBER	ITEM NUMBER
AN6C13A	88044	BULK	
AN6H10	88044	43	13E
AN6H10A	88044	42C	4
AN6H11	88044	BULK	
AN6H11A	88044	42A	4
AN6H12	88044	43	13G
AN6H14	88044	BULK	
AN6H14A	88044	BULK	
AN6H15	88044	BULK	
AN6H16	88044	60	
AN6H16	88044	61	
AN6H20	88044	BULK	
AN6H23	88044	BULK	
AN6H31	88044	KITS	
AN6H37	88044	44	25D
AN6H37	88044	45	12D
AN6H5	88044	QC1	164
AN6H5	88044	BULK	
AN6H5A	88044	259	10
AN6H6A	88044	42A	17
AN6H6A	88044	42C	18
AN6H7	88044	BULK	
AN6204-1	88044	57	14
AN6204-1	88044	58	13
AN6204-1	88044	111	14
AN6227-10	88044	26	
AN6227-10	88044	112	143
AN6227-10	88044	112	153
AN6227-10	88044	112	161
AN6227-10	88044	112	83
AN6227-10	88044	119	62
AN6227-10	88044	2178	30
AN6227-11		KITS	
AN6227-12	88044	88	
AN6227-13		KITS	
AN6227-13	88044	145	11
AN6227-18		KITS	
AN6227-18	88044	145	12
AN6227-29		KITS	
AN6227-5	88044	228	145
AN6227-8	88044	72	93
AN6227-8	88044	74	4
AN6227-9		KITS	
AN6227-9	88044	145	22
AN6227B10	88044	KITS	
AN6227B37		KITS	
AN6227B37	88044	155	9
AN6227B4	88044	BULK	
AN6227B87	88044	BULK	
AN6230-11	88044	219A	135
AN6230-11	88044	219A	37
AN6230-2		KITS	
AN6230-6	88044	58	4
AN6230B11	88044	155	3
AN6230B40	88044	56	7
AN6230B44	88044	50	21
AN6237-1	88044	262	54A
AN6240-1	88044	139	42
AN6240-1	88044	139	42
AN6244-2		KITS	
AN6248-2	88044	119	374
AN6248-2	88044	145	
AN6270-4-10	88044	178	1
AN6270-4-10	88044	178	24
AN6270-4-10	88044	179	11
AN6270-4-12	88044	179	27
AN6270-4-12	88044	180	31
AN6270-4-17 1-2	88044	178	13
AN6270-4-17 1-2	88044	178	26
AN6270-4-20	88044	178	14
AN6270-4-20	88044	178	9
AN6270-4-24	88044	178	14
AN6270-4-24	88044	178	27
AN6270-4-24	88044	178	9
AN6270-4D0134	88044	178	13
AN6270-4D0134	88044	178	26
AN6285D1	88044	117	84
AN6285D1	88044	119	404
AN6285D1	88044	129	
AN6285D2	88044	117	84
AN6285D2	88044	119	401
AN6285D2	88044	129	
AN6285D2	88044	KITS	
AN6287-1		KITS	
AN6289-10	88044	119	338
AN6289-10	88044	129	1A
AN6289-10	88044	129	75B
AN6289-16	88044	BULK	
AN6289-4		KITS	
AN6289-4	88044	44	32
AN6289-4	88044	115	46
AN6289-4	88044	117	2A
AN6289-4	88044	117	2B
AN6289-4	88044	117	4A
AN6289-4	88044	117	6A
AN6289-4	88044	119	
AN6289-4	88044	119	197
AN6289-4	88044	119	201
AN6289-4	88044	119	347
AN6289-4	88044	KITS	
AN6289-6	88044	119	327
AN6289-8	88044	QC1	84
AN6289-8	88044	119	269
AN6289-8	88044	119	342
AN6289-8	88044	143	5
AN6289C10	88044	129	9
AN6289C12	88044	129	65A
AN6289C12	88044	129	66A
AN6289D10	88044	QC1	90
AN6289D10	88044	129	10A
AN6289D10	88044	143	10
AN6289D12	88044	129	2A
AN6289D12	88044	129	46A
AN6289D12	88044	129	46C
AN6289D12	88044	129	71A
AN6289D12	88044	129	72A
AN6289D12	88044	129	98
AN6289D12	88044	139	97
AN6289D16	88044	129	109A
AN6289D16	88044	129	15A
AN6289D16	88044	129	18A
AN6289D16	88044	129	27A
AN6289D16	88044	129	63A
AN6289D16	88044	129	78A
AN6289D16	88044	139	37
AN6289D16	88044	139	38
AN6289D16	88044	139	85
AN6289D16	88044	139	86
AN6289D4	88044	KITS	
AN6289D4	88044	QC1	104
AN6289D4	88044	QC1	114
AN6289D4	88044	109	1
AN6289D4	88044	109	42
AN6289D4	88044	109	57C
AN6289D4	88044	109	60C
AN6289D4	88044	110	47
AN6289D4	88044	110	7
AN6289D4	88044	112	123
AN6289D4	88044	112	129
AN6289D4	88044	112	133
AN6289D4	88044	112	137
AN6289D4	88044	112	141

REFERENCE NUMBER	MFG CODE	FIG NUMBER	ITEM NUMBER
AN6289D4	88044	112	143
AN6289D4	88044	112	149
AN6289D4	88044	112	151
AN6289D4	88044	112	159
AN6289D4	88044	112	167
AN6289D4	88044	112	6
AN6289D4	88044	112	64
AN6289D4	88044	112	67
AN6289D4	88044	112	74
AN6289D4	88044	112	95
AN6289D4	88044	112	97
AN6289D4	88044	117	
AN6289D4	88044	117	75C
AN6289D4	88044	117	83
AN6289D4	88044	117	95J
AN6289D4	88044	119	
AN6289D4	88044	119	121
AN6289D4	88044	119	131
AN6289D4	88044	119	14
AN6289D4	88044	119	148
AN6289D4	88044	119	163
AN6289D4	88044	119	214
AN6289D4	88044	119	224
AN6289D4	88044	119	229
AN6289D4	88044	119	279
AN6289D4	88044	119	28
AN6289D4	88044	119	366
AN6289D4	88044	119	397
AN6289D4	88044	119	41
AN6289D4	88044	119	71
AN6289D4	88044	119	80
AN6289D4	88044	119	98
AN6289D4	88044	129	
AN6289D4	88044	129	143
AN6289D4	88044	129	25A
AN6289D4	88044	129	35B
AN6289D4	88044	129	52A
AN6289D4	88044	129	82A
AN6289D4	88044	129	95B
AN6289D4	88044	129	95D
AN6289D4	88044	129	95G
AN6289D4	88044	139	113
AN6289D4	88044	139	2
AN6289D4	88044	139	61
AN6289D4	88044	143	26
AN6289D4	88044	146	7
AN6289D4	88044	KITS	
AN6289D6	88044	QC1	130
AN6289D6	88044	QC1	95
AN6289D6	88044	109	14C
AN6289D6	88044	109	3
AN6289D6	88044	109	40
AN6289D6	88044	109	50
AN6289D6	88044	109	53C
AN6289D6	88044	109	55A
AN6289D6	88044	109	71C
AN6289D6	88044	112	1
AN6289D6	88044	112	14
AN6289D6	88044	112	18
AN6289D6	88044	112	22
AN6289D6	88044	112	29
AN6289D6	88044	112	33
AN6289D6	88044	112	35
AN6289D6	88044	112	38
AN6289D6	88044	112	44
AN6289D6	88044	112	48
AN6289D6	88044	116	
AN6289D6	88044	117	58A
AN6289D6	88044	117	95B
AN6289D6	88044	119	285
AN6289D6	88044	119	307

REFERENCE NUMBER	MFG CODE	FIG NUMBER	ITEM NUMBER
AN6289D6	88044	119	316
AN6289D6	88044	119	327
AN6289D6	88044	129	
AN6289D6	88044	129	109B
AN6289D6	88044	129	111A
AN6289D6	88044	129	44A
AN6289D6	88044	129	67B
AN6289D6	88044	129	70A
AN6289D6	88044	129	70B
AN6289D6	88044	139	111
AN6289D6	88044	139	23
AN6289D6	88044	139	4
AN6289D6	88044	139	45
AN6289D6	88044	139	57
AN6289D6	88044	139	72
AN6289D6	88044	139	99
AN6289D6	88044	KITS	
AN6289D8	88044	109	16
AN6289D8	88044	109	46
AN6289D8	88044	117	73B
AN6289D8	88044	117	79C
AN6289D8	88044	129	122
AN6289D8	88044	129	145
AN6289D8	88044	129	97
AN6289D8	88044	139	25
AN6289D8	88044	139	35
AN6289D8	88044	139	76
AN6289D8	88044	139	83
AN6290-2		KITS	
AN6290-4	88044	265	107
AN6290-4	88044	268	122
AN6290-6		KITS	
AN7-15A	88044	61	39
AN7H13	88044	60	35
AN7H15	88044	BULK	
AN735-13	88044	KITS	
AN735-15	88044	BULK	
AN735D10	88044	119	
AN735D10	88044	213	
AN735D10	88044	220	
AN735D10	88044	221	114
AN735D10	88044	221	138
AN735D10	88044	KITS	
AN735D16	88044	119	
AN735D16	88044	213	
AN735D16	88044	218	62C
AN735D16	88044	218	64B
AN735D16	88044	218	68C
AN735D16	88044	218	69C
AN735D16	88044	219	
AN735D16	88044	220	10
AN735D16	88044	221	102
AN735D16	88044	221	21
AN735D16	88044	221	23
AN735D16	88044	221	55
AN735D16	88044	221	68
AN735D16	88044	221	72
AN735D16	88044	221	75
AN735D16	88044	KITS	
AN735D16	88044	219A	183
AN735D16	88044	219A	79
AN735D2	88044	BULK	
AN735D4	88044	109	
AN735D4	88044	112	28
AN735D4	88044	112	69
AN735D4	88044	112	91
AN735D4	88044	119	
AN735D4	88044	213	
AN735D4	88044	220	
AN735D4	88044	221	40
AN735D4	88044	257	22A

REFERENCE NUMBER	MFG CODE	FIG NUMBER	ITEM NUMBER
AN735D4	88044	257	9C
AN735D4	88044	KITS	
AN735D6	88044	112	28
AN735D6	88044	112	32
AN735D6	88044	112	41
AN735D6	88044	112	45
AN735D6	88044	213	
AN735D6	88044	219	
AN735D6	88044	220	
AN735D6	88044	220	38
AN735D6	88044	221	10
AN735D6	88044	221	13
AN735D6	88044	221	18
AN735D6	88044	221	21
AN735D6	88044	221	23
AN735D6	88044	221	78
AN735D6	88044	221	83
AN735D6	88044	KITS	
AN735D6	88044	219A	78
AN735D8	88044	119	
AN737RM107	88044	196	4
AN737RM107	88044	KITS	
AN737RM22	88044	251	6B
AN737RM24	88044	76	11
AN737RM24	88044	81	8C
AN737RM24	88044	KITS	
AN737RM26	88044	42	6B
AN737RM26	88044	129	
AN737RM26	88044	KITS	
AN737RM30	88044	208	12
AN737RM30	88044	213	
AN737RM30	88044	220	
AN737RM30	88044	KITS	
AN737RM34	88044	QC1	66
AN737RM34	88044	207	
AN737RM34	88044	217	
AN737RM34	88044	KITS	
AN737RM34	88044	217A	16
AN737RM34	88044	217B	18
AN737RM38	88044	213	
AN737RM38	88044	220	
AN737RM38	88044	221	109
AN737RM38	88044	221	92
AN737RM38	88044	KITS	
AN737RM48	88044	QC1	
AN737RM48	88044	249	18
AN737RM48	88044	249	23
AN737RM48	88044	249	25
AN737RM48	88044	KITS	
AN737RM56	88044	62	32
AN737RM56	88044	QC1	23
AN737RM66	88044	95	147
AN737RM74	88044	BULK	
AN737RM91	88044	BULK	
AN742D6	88044	81	6
AN742D6	88044	KITS	
AN742D7	88044	119	
AN742D7	88044	KITS	
AN742F20	88044	95	24A
AN743-12	88044	62	
AN743-12	88044	QC1	
AN743-12	88044	129	
AN743-12	88044	217	
AN743-13	88044	42	
AN743P12	88044	110	36A
AN743Z13	88044	QC1	
AN743Z13	88044	213	
AN743Z13	88044	220	
AN753-1	88044	196	
AN753-1	88044	204	33F
AN753-2	88044	BULK	
AN753B2	88044	BULK	
AN763-16	88044	213	
AN763-16	88044	213	9
AN775-4		KITS	
AN775-4	88044	262	28
AN776-4D		KITS	
AN776-4D	88044	262	30
AN8-11A	88044	BULK	
AN8-11A	88044	KITS	
AN8-15A	88044	F20	11
AN8-17A	88044	KITS	
AN8-22A	88044	21	4
AN8-22A	88044	62	17
AN8-22A	88044	QC1	184
AN8-22A	88044	KITS	
AN8-25A	88044	BULK	
AN8-25A	88044	KITS	
AN8-45A	88044	F15	48
AN8CH14	88044	BULK	
AN8CH16	88044	BULK	
AN8CH35	88044	BULK	
AN8C14A	88044	263	5
AN8DDH7	88044	BULK	
AN8H17	88044	BULK	
AN8H21	88044	F15	54
AN8H21	88044	BULK	
AN8H22	88044	BULK	
AN8H25	88044	264	14B
AN8H6A	88044	QC1	19
AN8H6A	88044	BULK	
AN8H6A	88044	KITS	
AN8H7A	88044	62	26
AN8H7A	88044	QC1	126
AN8H7A	88044	QC1	18
AN8H7A	88044	KITS	
AN8018-1	88044	42	1
AN8018-1	88044	42	10
AN8019-1	88044	42	7
AN8020-1	88044	42	2
AN8031-10-120	88044	BULK	
AN814-10D	88044	129	13
AN814-12DL	88044	88	7
AN814-12DL	88044	89	12
AN814-16DL	88044	59	9
AN814-16DL	88044	88	11
AN814-16DL	88044	89	16
AN814-16DL	88044	140	24
AN814-3DL	88044	BULK	
AN814-3DL	88044	87	17
AN814-3DL	88044	87	5
AN814-3DL	88044	224	47
AN814-4S	88044	119	
AN814-5	88044	53	42
AN814-5DL		KITS	
AN814-6	88044	BULK	
AN814-8DL		KITS	
AN815-4D		KITS	
AN815-4D	88044	QC1	49
AN815-4D	88044	QC1	58
AN815-4D	88044	178	98
AN815-4D	88044	BULK	
AN816-4-4D	88044	179	14
AN816-4-4D	88044	179	30
AN816-4D	88044	178	10
AN816-4D	88044	178	11
AN816-4D	88044	178	22
AN816-4D	88044	178	23
AN816-4D	88044	178	25
AN816-4D	88044	178	3
AN816-6-6D	88044	81	7A
AN816-6-6D	88044	83	365

REFERENCE NUMBER	MFG CODE	FIG NUMBER	ITEM NUMBER	REFERENCE NUMBER	MFG CODE	FIG NUMBER	ITEM NUMBER
AN818-16D	88044	BULK		AN924-16D	88044	221	73
AN818-16D	88044	KITS		AN924-16D	88044	221	76
AN818-2D	88044	BULK		AN924-16D	88044	221	89
AN818-4D	88044	BULK		AN924-16D	88044	221	90
AN818-6C	88044	BULK		AN924-16D	88044	221	96
AN818-6D	88044	BULK		AN924-16D	88044	221	98
AN818-8C	88044	BULK		AN924-16D	88044	219A	171
AN818-8D	88044	BULK		AN924-16D	88044	219A	66
AN824-4D		KITS		AN924-20	88044	BULK	
AN832-10D	88044	BULK		AN924-20D	88044	95	125
AN832-4D		KITS		AN924-20D	88044	95	130
AN832-6D	88044	221	22	AN924-20D	88044	95	133
AN832-6D	88044	221	37	AN924-20D	88044	95	135
AN832-6D	88044	KITS		AN924-20D	88044	95	137
AN833-4		51	83	AN924-20D	88044	95	141
AN833-4		KITS		AN924-20D	88044	95	2
AN833-8C	88044	258	4	AN924-20D	88044	95	4
AN839-12D	88044	BULK		AN924-20D	88044	95	5
AN871-6D	88044	BULK		AN924-4	88044	93	22
AN871-8D	88044	BULK		AN924-4	88044	115	17
AN893-121D	88044	QC1	91	AN924-4	88044	115	41
AN893-13D	88044	129	111A	AN924-4	88044	115	50
AN893-13D	88044	KITS		AN924-4	88044	117	13A
AN893-22D	88044	95	77	AN924-4	88044	119	
AN893-22D	88044	KITS		AN924-4	88044	119	184
AN893-31C	88044	129	7A	AN924-4	88044	119	185
AN893-31C	88044	129	9	AN924-4	88044	119	208
AN894-5-4		KITS		AN924-4D	88044	KITS	
AN894-5-4	88044	51	81	AN924-4J	88044	139	118
AN894-5-4	88044	BULK		AN924-5D	88044	KITS	
AN9H7	88044	BULK		AN924-6	88044	251	36
AN900-10	88044	KITS		AN924-6D	88044	KITS	
AN900-7		KITS		AN924-6J	88044	BULK	
AN901-4A		KITS		AN924-8J	88044	258	3A
AN901-4A	88044	262	29	AN929-12	88044	34	
AN924-12D	88044	34		AN929-4	88044	178	99
AN924-12D	88044	95	105	AN929-4	88044	217A	3
AN924-12D	88044	95	48	AN929A16	88044	213	
AN924-12D	88044	95	58	AN929A16	88044	220	
AN924-12D	88044	95	80	AN929A16	88044	221	98
AN924-12D	88044	129	102B	AN929A8	88044	217	
AN924-12D	88044	139	51	AN929A8	88044	BULK	
AN924-12D	88044	139	52	AN931-4-7	88044	265	35
AN924-12D	88044	139	98	AN931-4-7	88044	268	62
AN924-16D	88044	95	50	AN931-8-20	88044	207	
AN924-16D	88044	95	93	AN932-3	88044	261	2
AN924-16D	88044	95	94	AN932D1	88044	BULK	
AN924-16D	88044	95	98	AN932D2	88044	BULK	
AN924-16D	88044	117		AN935-10	88044	270	62B
AN924-16D	88044	119	253	AN935-2L		KITS	
AN924-16D	88044	129	45A	AN935-416	88044	275	
AN924-16D	88044	213		AN935-916	88044	BULK	
AN924-16D	88044	213		AN936A2	88044	232	18
AN924-16D	88044	213		AN936A4	88044	167	19
AN924-16D	88044	218		AN936A4	88044	197	33
AN924-16D	88044	218	66	AN936A616	88044	260	32
AN924-16D	88044	220		AN936C8		KITS	
AN924-16D	88044	220		AN936D4		KITS	
AN924-16D	88044	220		AN936D6		KITS	
AN924-16D	88044	220	24	AN937D12	88044	129	71A
AN924-16D	88044	221	125	AN937D16	88044	129	18
AN924-16D	88044	221	135	AN937D4	88044	BULK	
AN924-16D	88044	221	26	AN937D6	88044	QC1	102
AN924-16D	88044	221	28	AN937D8	88044	119	349
AN924-16D	88044	221	34	AN938-6	88044	BULK	
AN924-16D	88044	221	35	AN938C10	88044	129	7A
AN924-16D	88044	221	52	AN938C10	88044	129	9
AN924-16D	88044	221	59	AN938D10	88044	119	258
AN924-16D	88044	221	60	AN938D10	88044	139	33
AN924-16D	88044	221	61	AN938D10	88044	139	81
AN924-16D	88044	221	67	AN938D12	88044	129	46C

REFERENCE NUMBER	MFG CODE	FIG NUMBER	ITEM NUMBER
AN938D16	88044	218	72
AN938D16	88044	221	125
AN938D16	88044	221	135
AN938D16	88044	221	90
AN938D16	88044	221	96
AN938D16	88044	221	98
AN938D4	88044	BULK	
AN938D6	88044	QC1	119
AN938D6	88044	110	35
AN938D6	88044	129	70A
AN938D6	88044	143	24
AN938D6	88044	221	37
AN939D12	88044	BULK	
AN939D16	88044	BULK	
AN939D4	88044	93	20
AN939D4	88044	117	83
AN939D4	88044	119	400
AN939D4	88044	129	
AN939D4	88044	KITS	
AN939D6	88044	QC1	131
AN939D6	88044	112	15
AN939D6	88044	221	38
AN946RE4M6	88044	273	22A
AN946RE4M6	88044	273	29
AN960-10	88044	15	39
AN960-10	88044	16	24
AN960-10	88044	18	146
AN960-10	88044	18	91C
AN960-10	88044	18	98C
AN960-10	88044	20	
AN960-10	88044	24	12A
AN960-10	88044	24	14A
AN960-10	88044	24	16A
AN960-10	88044	24	19B
AN960-10	88044	24	20
AN960-10	88044	24	22A
AN960-10	88044	26	10
AN960-10	88044	28	
AN960-10	88044	28	37
AN960-10	88044	31	
AN960-10	88044	31	19
AN960-10	88044	31	20C
AN960-10	88044	53	26B
AN960-10	88044	59	
AN960-10	88044	60	14
AN960-10	88044	62	13
AN960-10	88044	67	2
AN960-10	88044	71	120
AN960-10	88044	76	102A
AN960-10	88044	76	11B
AN960-10	88044	76	12B
AN960-10	88044	76	146B
AN960-10	88044	76	170
AN960-10	88044	76	176
AN960-10	88044	76	178
AN960-10	88044	76	179F
AN960-10	88044	76	40
AN960-10	88044	76	55
AN960-10	88044	76	55C
AN960-10	88044	76	72B
AN960-10	88044	76	72E
AN960-10	88044	81	10
AN960-10	88044	81	49A
AN960-10	88044	83	105
AN960-10	88044	83	128
AN960-10	88044	83	150A
AN960-10	88044	83	16
AN960-10	88044	83	163
AN960-10	88044	83	30
AN960-10	88044	83	40
AN960-10	88044	83	49
AN960-10	88044	83	56
AN960-10	88044	83	7
AN960-10	88044	83	75
AN960-10	88044	88	18A
AN960-10	88044	88	24E
AN960-10	88044	88	46B
AN960-10	88044	89	19
AN960-10	88044	89	40
AN960-10	88044	89	90
AN960-10	88044	92	19
AN960-10	88044	92	77
AN960-10	88044	QC1	21D
AN960-10	88044	100	6
AN960-10	88044	135	11
AN960-10	88044	148	13
AN960-10	88044	148	7
AN960-10	88044	191	39
AN960-10	88044	198	
AN960-10	88044	198	
AN960-10	88044	198	
AN960-10	88044	198	24
AN960-10	88044	198	29
AN960-10	88044	209	
AN960-10	88044	222	
AN960-10	88044	222	
AN960-10	88044	223	108
AN960-10	88044	223	114
AN960-10	88044	223	48
AN960-10	88044	228	29
AN960-10	88044	228	57
AN960-10	88044	229	19
AN960-10	88044	245	2A
AN960-10	88044	245	2B
AN960-10	88044	245	21D
AN960-10	88044	246	7
AN960-10	88044	251	45B
AN960-10	88044	263	13A
AN960-10	88044	264	1D
AN960-10	88044	264	3B
AN960-10	88044	270	32B
AN960-10	88044	274	12
AN960-10	88044	275	14C
AN960-10	88044	281	
AN960-10	88044	36A	29
AN960-10	88044	36A	33
AN960-10	88044	36A	38
AN960-10	88044	36B	
AN960-10	88044	37A	30
AN960-10	88044	BULK	
AN960-10	88044	KITS	
AN960-10L		KITS	
AN960-10L	88044	18	
AN960-10L	88044	18	161C
AN960-10L	88044	20	88B
AN960-10L	88044	45	22
AN960-10L	88044	51	35A
AN960-10L	88044	51	78
AN960-10L	88044	54	23
AN960-10L	88044	66	29
AN960-10L	88044	66	30
AN960-10L	88044	71	119
AN960-10L	88044	71	88A
AN960-10L	88044	76	179E
AN960-10L	88044	83	35B
AN960-10L	88044	89	44
AN960-10L	88044	92	20
AN960-10L	88044	92	78
AN960-10L	88044	95	167A
AN960-10L	88044	QC1	
AN960-10L	88044	QC1	158
AN960-10L	88044	QC1	41C

REFERENCE NUMBER	MFG CODE	FIG NUMBER	ITEM NUMBER
AN960-10L	88044	100	16
AN960-10L	88044	100	8
AN960-10L	88044	109	
AN960-10L	88044	11B	110
AN960-10L	88044	115	
AN960-10L	88044	116	
AN960-10L	88044	117	
AN960-10L	88044	119	
AN960-10L	88044	119	158
AN960-10L	88044	119	296
AN960-10L	88044	119	319
AN960-10L	88044	119	362
AN960-10L	88044	119	95
AN960-10L	88044	129	
AN960-10L	88044	135	3
AN960-10L	88044	191	16
AN960-10L	88044	195	13
AN960-10L	88044	198	
AN960-10L	88044	198	24
AN960-10L	88044	198	29
AN960-10L	88044	211	
AN960-10L	88044	211	24
AN960-10L	88044	212	10
AN960-10L	88044	213	
AN960-10L	88044	223	109
AN960-10L	88044	223	49
AN960-10L	88044	223	85
AN960-10L	88044	228	30
AN960-10L	88044	230	5
AN960-10L	88044	231	3
AN960-10L	88044	245	15A
AN960-10L	88044	245	21C
AN960-10L	88044	245	25A
AN960-10L	88044	246	12
AN960-10L	88044	246	15
AN960-10L	88044	246	7A
AN960-10L	88044	249	20A
AN960-10L	88044	251	10
AN960-10L	88044	251	34A
AN960-10L	88044	259	6B
AN960-10L	88044	262	35
AN960-10L	88044	262	46
AN960-10L	88044	262	7
AN960-10L	88044	263	24
AN960-10L	88044	281	
AN960-10L	88044	282	22
AN960-10L	88044	282	3
AN960-10L	88044	282	7
AN960-10L	88044	37A	18
AN960-10L	88044	37A	29
AN960-10L	88044	37A	35
AN960-10L	88044	37A	8
AN960-10L	88044	37A	95
AN960-10L	88044	KITS	
AN960-10L	88044	189A	21
AN960-1016		KITS	
AN960-1016	88044	45	9
AN960-1016	88044	54	5
AN960-1016	88044	69	8
AN960-1016	88044	70	23
AN960-1016	88044	92	48
AN960-1016	88044	92	95
AN960-1016	88044	11B	85
AN960-1016	88044	11B	87
AN960-1016	88044	240	76
AN960-1016	88044	244	57
AN960-1016	88044	244	68
AN960-1016	88044	244	86
AN960-1016	88044	244	97
AN960-1016	88044	261	14
AN960-1016	88044	KITS	

REFERENCE NUMBER	MFG CODE	FIG NUMBER	ITEM NUMBER
AN960-1016L	88044	44	18B
AN960-1016L	88044	45	14
AN960-1016L	88044	69	8A
AN960-1016L	88044	70	23A
AN960-1016L	88044	11B	36A
AN960-1016L	88044	11B	84
AN960-1016L	88044	11B	87
AN960-1016L	88044	244	
AN960-1016L	88044	244	69
AN960-1016L	88044	244	86
AN960-1016L	88044	244	97
AN960-1216	88044	71	107
AN960-1216	88044	72	38
AN960-1216	88044	72	5
AN960-1216	88044	72	70
AN960-1216	88044	75	46
AN960-1216	88044	94	8
AN960-1216	88044	KITS	
AN960-1216L	88044	75	46
AN960-1216L	88044	239	41
AN960-1216L	88044	239	75
AN960-1216L	88044	269	8B
AN960-1416	88044	BULK	
AN960-1616	88044	238	17
AN960-1616L	88044	222	187
AN960-1616L	88044	222	67
AN960-2016	88044	BULK	
AN960-2016L	88044	95	125
AN960-2016L	88044	95	133
AN960-2016L	88044	244	75
AN960-3	88044	76	179I
AN960-3	88044	81	130A
AN960-3	88044	83	376
AN960-3	88044	89	129A
AN960-3	88044	193	50
AN960-3	88044	231	111
AN960-4L	88044	18	
AN960-4L	88044	193	56
AN960-4L	88044	193	92
AN960-4L	88044	194	23
AN960-4L	88044	194	27
AN960-4L	88044	194	34
AN960-4L	88044	194	57
AN960-4L	88044	189A	31A
AN960-416		KITS	
AN960-416	88044	15	8D
AN960-416	88044	24	
AN960-416	88044	25	16C
AN960-416	88044	37	1
AN960-416	88044	37	14
AN960-416	88044	37	35B
AN960-416	88044	44	12A
AN960-416	88044	62	
AN960-416	88044	66	14
AN960-416	88044	66	15
AN960-416	88044	66	3
AN960-416	88044	66	4
AN960-416	88044	75	116
AN960-416	88044	75	118
AN960-416	88044	76	119
AN960-416	88044	76	120A
AN960-416	88044	76	123
AN960-416	88044	76	126C
AN960-416	88044	76	135
AN960-416	88044	76	157
AN960-416	88044	76	2A
AN960-416	88044	76	38A
AN960-416	88044	76	57
AN960-416	88044	76	60
AN960-416	88044	76	79
AN960-416	88044	76	8B

REFERENCE NUMBER	MFG CODE	FIG NUMBER	ITEM NUMBER	REFERENCE NUMBER	MFG CODE	FIG NUMBER	ITEM NUMBER
AN960-416	88044	76	82	AN960-416	88044	223	41
AN960-416	88044	81	149B	AN960-416	88044	223	79
AN960-416	88044	81	149C	AN960-416	88044	223	90
AN960-416	88044	81	152	AN960-416	88044	226	14
AN960-416	88044	81	16A	AN960-416	88044	226	26
AN960-416	88044	81	165A	AN960-416	88044	226	4
AN960-416	88044	81	175A	AN960-416	88044	228	114
AN960-416	88044	81	18A	AN960-416	88044	228	120
AN960-416	88044	81	187A	AN960-416	88044	228	127D
AN960-416	88044	81	23	AN960-416	88044	228	13
AN960-416	88044	81	29	AN960-416	88044	228	160
AN960-416	88044	81	36	AN960-416	88044	228	175
AN960-416	88044	81	39	AN960-416	88044	228	186
AN960-416	88044	81	42	AN960-416	88044	228	35
AN960-416	88044	81	58	AN960-416	88044	228	43
AN960-416	88044	81	75	AN960-416	88044	228	49
AN960-416	88044	81	79	AN960-416	88044	228	5
AN960-416	88044	81	83	AN960-416	88044	228	63
AN960-416	88044	83	115	AN960-416	88044	228	73
AN960-416	88044	83	120	AN960-416	88044	228	97
AN960-416	88044	83	133	AN960-416	88044	229	23
AN960-416	88044	83	138	AN960-416	88044	229	34
AN960-416	88044	83	154	AN960-416	88044	235	5
AN960-416	88044	83	187	AN960-416	88044	235	9
AN960-416	88044	83	218	AN960-416	88044	237	22
AN960-416	88044	83	219	AN960-416	88044	237	50
AN960-416	88044	83	234	AN960-416	88044	239	116
AN960-416	88044	83	298	AN960-416	88044	239	130
AN960-416	88044	83	324	AN960-416	88044	239	96
AN960-416	88044	83	372	AN960-416	88044	240	19
AN960-416	88044	83	62	AN960-416	88044	240	27
AN960-416	88044	88	24A	AN960-416	88044	242	11
AN960-416	88044	88	28	AN960-416	88044	244	17
AN960-416	88044	88	3A	AN960-416	88044	244	18
AN960-416	88044	88	50	AN960-416	88044	244	26
AN960-416	88044	88	57	AN960-416	88044	244	27
AN960-416	88044	89	3	AN960-416	88044	245	18B
AN960-416	88044	89	99	AN960-416	88044	246	3A
AN960-416	88044	91	6	AN960-416	88044	262	2
AN960-416	88044	91	8	AN960-416	88044	265	249
AN960-416	88044	92	31	AN960-416	88044	265	303
AN960-416	88044	92	85	AN960-416	88044	268	264
AN960-416	88044	95		AN960-416	88044	273	17A
AN960-416	88044	95	113B	AN960-416	88044	280	2
AN960-416	88044	95	157	AN960-416	88044	281	
AN960-416	88044	95	160	AN960-416	88044	37A	46
AN960-416	88044	95	178B	AN960-416	88044	37A	62
AN960-416	88044	95	38B	AN960-416	88044	37A	92
AN960-416	88044	F15	22	AN960-416	88044	42A	10
AN960-416	88044	F17	11	AN960-416	88044	42A	14
AN960-416	88044	F17	18	AN960-416	88044	42B	9
AN960-416	88044	F17	22	AN960-416	88044	42C	11
AN960-416	88044	F17	4	AN960-416	88044	42C	15
AN960-416	88044	102	7E	AN960-416	88044	KITS	
AN960-416	88044	103	6C	AN960-416L		KITS	
AN960-416	88044	118		AN960-416L	88044	11	45
AN960-416	88044	118	3	AN960-416L	88044	11	46
AN960-416	88044	135	16	AN960-416L	88044	16	26B
AN960-416	88044	149	19	AN960-416L	88044	16	6C
AN960-416	88044	222		AN960-416L	88044	18	147
AN960-416	88044	222	138	AN960-416L	88044	20	109
AN960-416	88044	222	14	AN960-416L	88044	21	83
AN960-416	88044	222	145	AN960-416L	88044	21	90
AN960-416	88044	222	3	AN960-416L	88044	24	6C
AN960-416	88044	222	36	AN960-416L	88044	25	168
AN960-416	88044	223	137	AN960-416L	88044	31	
AN960-416	88044	223	16	AN960-416L	88044	33	4
AN960-416	88044	223	23	AN960-416L	88044	33	44C
AN960-416	88044	223	3	AN960-416L	88044	34	44
AN960-416	88044	223	31	AN960-416L	88044	37	1
AN960-416	88044	223	40	AN960-416L	88044	49	42

REFERENCE NUMBER	MFG CODE	FIG NUMBER	ITEM NUMBER
AN960-416L	88044	51	3A
AN960-416L	88044	57	6
AN960-416L	88044	59	12
AN960-416L	88044	62	
AN960-416L	88044	71	114
AN960-416L	88044	71	139
AN960-416L	88044	71	41
AN960-416L	88044	71	44A
AN960-416L	88044	75	101
AN960-416L	88044	75	120
AN960-416L	88044	75	129
AN960-416L	88044	75	90
AN960-416L	88044	76	157
AN960-416L	88044	81	166A
AN960-416L	88044	89	26
AN960-416L	88044	89	67
AN960-416L	88044	F17	23
AN960-416L	88044	F17	5
AN960-416L	88044	F19	5
AN960-416L	88044	QC1	26A
AN960-416L	88044	119	
AN960-416L	88044	119	125
AN960-416L	88044	119	228
AN960-416L	88044	119	272
AN960-416L	88044	119	330
AN960-416L	88044	119	377
AN960-416L	88044	183	37
AN960-416L	88044	210	23
AN960-416L	88044	210	57
AN960-416L	88044	210	61
AN960-416L	88044	210	9
AN960-416L	88044	211	14
AN960-416L	88044	211	18A
AN960-416L	88044	211	21A
AN960-416L	88044	212	12
AN960-416L	88044	222	
AN960-416L	88044	222	139
AN960-416L	88044	222	14
AN960-416L	88044	222	146
AN960-416L	88044	222	19C
AN960-416L	88044	222	37
AN960-416L	88044	222	4
AN960-416L	88044	223	10
AN960-416L	88044	223	138
AN960-416L	88044	223	17
AN960-416L	88044	223	18
AN960-416L	88044	223	24
AN960-416L	88044	223	25
AN960-416L	88044	223	32
AN960-416L	88044	223	33
AN960-416L	88044	223	4
AN960-416L	88044	223	42
AN960-416L	88044	223	78
AN960-416L	88044	226	5
AN960-416L	88044	228	10
AN960-416L	88044	228	115
AN960-416L	88044	228	121
AN960-416L	88044	228	14
AN960-416L	88044	228	176
AN960-416L	88044	228	187
AN960-416L	88044	228	36
AN960-416L	88044	228	44
AN960-416L	88044	228	50
AN960-416L	88044	228	6
AN960-416L	88044	228	62
AN960-416L	88044	228	68
AN960-416L	88044	228	74
AN960-416L	88044	228	98
AN960-416L	88044	229	24
AN960-416L	88044	229	28
AN960-416L	88044	229	33
AN960-416L	88044	229	39
AN960-416L	88044	235	10
AN960-416L	88044	237	19
AN960-416L	88044	237	47
AN960-416L	88044	239	117
AN960-416L	88044	239	131
AN960-416L	88044	239	97
AN960-416L	88044	240	20
AN960-416L	88044	240	28
AN960-416L	88044	242	16
AN960-416L	88044	242	27
AN960-416L	88044	244	16
AN960-416L	88044	244	18
AN960-416L	88044	244	25
AN960-416L	88044	244	27
AN960-416L	88044	246	3
AN960-416L	88044	280	9
AN960-416L	88044	37A	102
AN960-416L	88044	37A	14
AN960-416L	88044	37A	45
AN960-416L	88044	37A	62
AN960-416L	88044	37A	91
AN960-416L	88044	42B	10
AN960-416L	88044	42B	52
AN960-416L	88044	42B	72
AN960-416L	88044	KITS	
AN960-516	88044	11	129
AN960-516	88044	16	1A
AN960-516	88044	21	26B
AN960-516	88044	24	7
AN960-516	88044	33	
AN960-516	88044	59	7A
AN960-516	88044	60	2
AN960-516	88044	61	6
AN960-516	88044	63	31
AN960-516	88044	71	129
AN960-516	88044	76	139
AN960-516	88044	76	142B
AN960-516	88044	76	21
AN960-516	88044	76	24A
AN960-516	88044	76	30
AN960-516	88044	76	38A
AN960-516	88044	76	57
AN960-516	88044	76	85
AN960-516	88044	78	50
AN960-516	88044	80	1A
AN960-516	88044	81	143A
AN960-516	88044	81	156
AN960-516	88044	83	13
AN960-516	88044	83	170
AN960-516	88044	83	20B
AN960-516	88044	83	278
AN960-516	88044	83	285
AN960-516	88044	83	304
AN960-516	88044	83	328
AN960-516	88044	83	368
AN960-516	88044	83	4
AN960-516	88044	83	96
AN960-516	88044	87	12
AN960-516	88044	87	15
AN960-516	88044	87	2
AN960-516	88044	87	9
AN960-516	88044	91	11
AN960-516	88044	92	2
AN960-516	88044	92	60
AN960-516	88044	F20	14
AN960-516	88044	QC1	2B
AN960-516	88044	11B	12A
AN960-516	88044	11B	4
AN960-516	88044	149	48
AN960-516	88044	222	109

REFERENCE NUMBER	MFG CODE	FIG NUMBER	ITEM NUMBER
AN960-516	88044	222	38
AN960-516	88044	223	103
AN960-516	88044	223	125
AN960-516	88044	223	190
AN960-516	88044	223	205
AN960-516	88044	229	21
AN960-516	88044	235	16
AN960-516	88044	237	2
AN960-516	88044	237	30
AN960-516	88044	238	7
AN960-516	88044	239	10
AN960-516	88044	239	152
AN960-516	88044	239	16
AN960-516	88044	242	14
AN960-516	88044	242	18
AN960-516	88044	242	9
AN960-516	88044	243	4C
AN960-516	88044	244	10
AN960-516	88044	244	2
AN960-516	88044	274	17
AN960-516	88044	42A	27
AN960-516	88044	42C	28
AN960-516	88044	KITS	
AN960-516L		KITS	
AN960-516L	88044	11	107
AN960-516L	88044	11	49
AN960-516L	88044	71	129A
AN960-516L	88044	75	101
AN960-516L	88044	75	94
AN960-516L	88044	89	31
AN960-516L	88044	89	78
AN960-516L	88044	118	12B
AN960-516L	88044	118	5
AN960-516L	88044	222	108
AN960-516L	88044	222	39
AN960-516L	88044	223	104
AN960-516L	88044	223	126
AN960-516L	88044	223	148
AN960-516L	88044	223	149
AN960-516L	88044	223	191
AN960-516L	88044	223	206
AN960-516L	88044	223	77
AN960-516L	88044	229	20
AN960-516L	88044	229	6
AN960-516L	88044	237	29
AN960-516L	88044	239	11
AN960-516L	88044	239	153
AN960-516L	88044	239	17
AN960-516L	88044	242	10
AN960-516L	88044	242	12
AN960-516L	88044	242	15
AN960-516L	88044	242	17
AN960-516L	88044	243	4D
AN960-516L	88044	244	3
AN960-516L	88044	245	10A
AN960-516L	88044	246	
AN960-516L	88044	284	22
AN960-516L	88044	285	22
AN960-6	88044	100	14
AN960-6	88044	184	9
AN960-6	88044	188	
AN960-6	88044	215	47
AN960-6	88044	BULK	
AN960-6L	88044	193	42
AN960-6L	88044	193	44B
AN960-6L	88044	193	46
AN960-6L	88044	193	88
AN960-6L	88044	194	17
AN960-6L	88044	194	40
AN960-6L	88044	210	12
AN960-6L	88044	210	15
AN960-6L	88044	210	75
AN960-6L	88044	210	94
AN960-6L	88044	223	93
AN960-61	88044	210	36
AN960-616	88044	11	23
AN960-616	88044	11	59
AN960-616	88044	11	96
AN960-616	88044	16	5A
AN960-616	88044	43	13A
AN960-616	88044	45	10A
AN960-616	88044	49	29
AN960-616	88044	49	56B
AN960-616	88044	61	20
AN960-616	88044	62	70
AN960-616	88044	75	15
AN960-616	88044	75	54
AN960-616	88044	75	64
AN960-616	88044	75	68
AN960-616	88044	76	114A
AN960-616	96906	76	126C
AN960-616	88044	81	62
AN960-616	88044	83	202
AN960-616	88044	83	27
AN960-616	88044	83	34
AN960-616	88044	88	1A
AN960-616	88044	89	1A
AN960-616	88044	QC1	173A
AN960-616	88044	QC1	78A
AN960-616	88044	222	174
AN960-616	88044	222	92A
AN960-616	88044	238	4
AN960-616	88044	238	55
AN960-616	88044	238	57
AN960-616	88044	239	3
AN960-616	88044	239	85
AN960-616	88044	240	10
AN960-616	88044	240	38
AN960-616	88044	240	49
AN960-616	88044	244	101
AN960-616	88044	244	112
AN960-616	88044	244	133
AN960-616	88044	244	64
AN960-616	88044	42A	18
AN960-616	88044	42A	7
AN960-616	88044	42C	19
AN960-616	88044	42C	5
AN960-616	88044	42C	8
AN960-616	88044	KITS	
AN960-616L	88044	11	103
AN960-616L	88044	11	44
AN960-616L	88044	11	84C
AN960-616L	88044	11	93
AN960-616L	88044	20	
AN960-616L	88044	44	25C
AN960-616L	88044	45	11
AN960-616L	88044	45	12C
AN960-616L	88044	51	74
AN960-616L	88044	60	18
AN960-616L	88044	61	15
AN960-616L	88044	61	3
AN960-616L	88044	75	166
AN960-616L	88044	75	54
AN960-616L	88044	75	64
AN960-616L	88044	75	68
AN960-616L	88044	223	162
AN960-616L	88044	223	163
AN960-616L	88044	223	55
AN960-616L	88044	238	13
AN960-616L	88044	239	4
AN960-616L	88044	239	86
AN960-616L	88044	242	13

REFERENCE NUMBER	MFG CODE	FIG NUMBER	ITEM NUMBER
AN960-616L	96906	242	19
AN960-616L	88044	243	9C
AN960-616L	88044	244	111
AN960-716	88044	11	24
AN960-716	88044	49	50A
AN960-716	88044	60	36
AN960-716	88044	61	37
AN960-716	88044	81	133
AN960-716	88044	83	292
AN960-716	88044	91	11
AN960-716	88044	115	17
AN960-716	88044	115	41
AN960-716	88044	115	50
AN960-716	88044	117	13A
AN960-716	88044	119	
AN960-716	88044	119	184
AN960-716	88044	119	185
AN960-716	88044	222	45
AN960-716	88044	222	48
AN960-716	88044	236	17
AN960-716	88044	236	4
AN960-716	88044	243	22C
AN960-716	88044	244	122
AN960-716	88044	244	42
AN960-716L	88044	139	118
AN960-716L	88044	222	49
AN960-716L	88044	243	15C
AN960-716L	88044	243	22D
AN960-716L	88044	244	37
AN960-716L	88044	244	43
AN960-8	88044	20	98
AN960-8	88044	37	
AN960-8	88044	45	19
AN960-8	88044	83	35F
AN960-8	88044	92	51C
AN960-8	88044	198	
AN960-8	88044	209	
AN960-8	88044	212	17
AN960-8	88044	215	52
AN960-8	88044	252	14
AN960-8	88044	252	9
AN960-8	88044	264	9
AN960-8	88044	275	26
AN960-8L	88044	18	
AN960-8L	88044	92	51C
AN960-8L	88044	QC1	
AN960-8L	88044	189	12
AN960-8L	88044	198	
AN960-8L	88044	210	38
AN960-8L	88044	210	72
AN960-8L	88044	36A	24
AN960-8L	88044	KITS	
AN960-816	88044	53	1A
AN960-816	88044	62	18
AN960-816	88044	62	6B
AN960-816	88044	75	15
AN960-816	88044	75	46
AN960-816	88044	F15	34
AN960-816	88044	F15	40
AN960-816	88044	F20	22
AN960-816	88044	QC1	126A
AN960-816	88044	QC1	184B
AN960-816	88044	11B	36
AN960-816	88044	222	115
AN960-816	88044	222	127
AN960-816	88044	222	160
AN960-816	88044	222	165
AN960-816	88044	222	179
AN960-816	88044	222	194
AN960-816	88044	222	205
AN960-816	88044	222	55
AN960-816	88044	222	60
AN960-816	88044	222	74
AN960-816	88044	222	87
AN960-816	88044	237	35
AN960-816	88044	237	7
AN960-816	88044	238	38
AN960-816	88044	238	60
AN960-816	88044	239	103
AN960-816	88044	239	165
AN960-816	88044	240	103
AN960-816	88044	244	49
AN960-816	88044	244	53A
AN960-816	88044	244	58
AN960-816	88044	244	64
AN960-816	88044	244	69
AN960-816	88044	244	81
AN960-816	88044	244	86
AN960-816	88044	244	92
AN960-816	88044	244	97
AN960-816	88044	252	3
AN960-816	88044	KITS	
AN960-816L		KITS	
AN960-816L	88044	11	40
AN960-816L	88044	11	41
AN960-816L	88044	59	20B
AN960-816L	88044	62	27
AN960-816L	88044	75	15
AN960-816L	88044	75	46
AN960-816L	88044	F15	11
AN960-816L	88044	F15	7
AN960-816L	88044	QC1	18A
AN960-816L	88044	11B	36B
AN960-816L	88044	222	
AN960-816L	88044	222	114
AN960-816L	88044	222	126
AN960-816L	88044	222	166
AN960-816L	88044	222	180
AN960-816L	88044	222	193
AN960-816L	88044	222	204
AN960-816L	88044	222	75
AN960-816L	88044	222	84
AN960-816L	88044	237	36
AN960-816L	88044	237	8
AN960-816L	88044	239	104
AN960-816L	88044	244	49
AN960-816L	88044	244	69
AN960-816L	88044	244	86
AN960-816L	88044	244	97
AN960-816L	88044	KITS	
AN960-916	88044	49	32B
AN960-916	88044	75	54
AN960-916	88044	92	23
AN960-916	88044	92	64
AN960-916	88044	92	9
AN960-916	88044	QC1	122
AN960-916	88044	143	33
AN960-916	88044	238	46
AN960-916	88044	239	52
AN960-916	88044	KITS	
AN960-916L		KITS	
AN960B10L	88044	182	
AN96086	88044	100	24
AN960C10	88044	21	16B
AN960C10	88044	31	
AN960C10	88044	33	10D
AN960C10	88044	33	16B
AN960C10	88044	33	26B
AN960C10	88044	62	46
AN960C10	88044	62	51
AN960C10	88044	134	2
AN960C10	88044	134	44

REFERENCE NUMBER	MFG CODE	FIG NUMBER	ITEM NUMBER
AN960C10	88044	228	
AN960C10	88044	265	219
AN960C10	88044	270	24A
AN960C10	88044	270	4A
AN960C10	88044	KITS	
AN960C10L	88044	13	89
AN960C10L	88044	18	
AN960C10L	88044	21	
AN960C10L	88044	21	14B
AN960C10L	88044	34	
AN960C10L	88044	47	2
AN960C10L	88044	49	
AN960C10L	88044	66	29
AN960C10L	88044	66	30
AN960C10L	88044	66	34
AN960C10L	88044	66	37
AN960C10L	88044	QC1	
AN960C10L	88044	QC1	150B
AN960C10L	88044	188	65B
AN960C10L	88044	228	83
AN960C10L	88044	248	56
AN960C10L	88044	251	46B
AN960C10L	88044	268	215
AN960C10L	88044	275	
AN960C10L	88044	42B	3
AN960C10L	88044	64A	17
AN960C10L	88044	64A	2
AN960C10L	88044	KITS	
AN960C10L	88044	183A	6
AN960C101	88044	QC1	153
AN960C1016	88044	72	10
AN960C1016L	88044	244	81
AN960C1016L	88044	244	92
AN960C1016L	88044	42B	79
AN960C1216	88044	44	3
AN960C1216	88044	45	3
AN960C1216	88044	144	12
AN960C1216	88044	258	3B
AN960C1216L	88044	44	4
AN960C1216L	88044	45	2
AN960C1216L	88044	KITS	
AN960C1416	88044	269	6A
AN960C3	88044	BULK	
AN960C4L	88044	176	25
AN960C4L	88044	176	42
AN960C4L	88044	177	24
AN960C4L	88044	177	49
AN960C4L	88044	248	7
AN960C4L	88044	248	92
AN960C4L	88044	64A	59
AN960C416	88044	22	55
AN960C416	88044	31	
AN960C416	88044	QC1	37C
AN960C416	88044	268	179
AN960C416	88044	269	15A
AN960C416	88044	270	15
AN960C416	88044	270	30B
AN960C416	88044	270	46
AN960C416	88044	42B	34
AN960C416	88044	42B	72
AN960C416	88044	KITS	
AN960C416L	88044	18	
AN960C416L	88044	21	24
AN960C416L	88044	25	12A
AN960C416L	88044	31	25B
AN960C416L	88044	66	24
AN960C416L	88044	66	41
AN960C416L	88044	89	95
AN960C416L	88044	97	11B
AN960C416L	88044	97	17
AN960C416L	88044	97	4
AN960C416L	88044	97	7B
AN960C416L	88044	98	3
AN960C416L	88044	98	6
AN960C416L	88044	99	3
AN960C416L	88044	QC1	
AN960C416L	88044	QC1	37D
AN960C416L	88044	QC1	39A
AN960C416L	88044	218	12C
AN960C416L	88044	218	8B
AN960C416L	88044	268	177A
AN960C416L	88044	270	36A
AN960C416L	88044	270	39A
AN960C416L	88044	273	2B
AN960C416L	88044	273	27
AN960C416L	88044	284	39
AN960C416L	88044	285	3
AN960C416L	88044	42B	34
AN960C416L	88044	KITS	
AN960C416L	88044	219A	133
AN960C416L	88044	219A	140
AN960C416L	88044	219A	28
AN960C416L	88044	219A	31
AN960C516	88044	25	25A
AN960C516	88044	25	29B
AN960C516	88044	33	10C
AN960C516	88044	248	41
AN960C516	88044	42B	11
AN960C516L	88044	137	13
AN960C516L	88044	137	3
AN960C516L	88044	42B	45
AN960C516L	88044	248	3
AN960C6	88044	228	147A
AN960C6L	88044	248	12
AN960C6L		KITS	
AN960C616	88044	45	17
AN960C616	88044	153	6
AN960C616	88044	265	225
AN960C616	88044	20	
AN960C616L	88044	43	13C
AN960C616L	88044	45	8A
AN960C616L	88044	263	2
AN960C616L	88044	268	220
AN960C616L	88044	KITS	
AN960C716	88044	31	
AN960C716	88044	119	208
AN960C716	88044	KITS	
AN960C716L	88044	34	29
AN960C716L	88044	34	39
AN960C716L	88044	115	59
AN960C716L	88044	KITS	
AN960C8	88044	34	
AN960C8	88044	248	18
AN960C8	88044	248	37
AN960C8L	88044	64A	64
AN960C8L	88044	KITS	
AN960C816	88044	20	46
AN960C816	88044	34	49
AN960C816	88044	62	
AN960C816	88044	72	8
AN960C816	88044	QC1	188A
AN960C816	88044	263	5
AN960C816	88044	270	14
AN960C816	88044	270	20B
AN960C816	88044	270	23B
AN960C816	88044	270	4B
AN960C816L	88044	20	47
AN960C816L	88044	45	29E
AN960C816L	88044	F15	17
AN960C816L	88044	F15	47
AN960C816L	88044	F15	49
AN960C816L	88044	KITS	

REFERENCE NUMBER	MFG CODE	FIG NUMBER	ITEM NUMBER
AN960C916	88044	263	11A
AN960C916L	88044	BULK	
AN960C916L	88044	KITS	
AN960D10L	88044	F16	31
AN960D10L	88044	F16	49
AN960D10L	88044	F16	6
AN960D10L	88044	257	15B
AN960D1616L	88044	BULK	
AN960D4L	88044	76	112B
AN960D4L	88044	191	32
AN960D416L	88044	F16	12
AN960D416L	88044	F16	42
AN960D416L	88044	F16	45
AN960D416L	88044	F16	9
AN960D616	88044	F16	37
AN960PD10	88044	11	100
AN960PD10	88044	11	39
AN960PD10	88044	13	13
AN960PD10	88044	13	22
AN960PD10	88044	13	31
AN960PD10	88044	13	40E
AN960PD10	88044	13	47
AN960PD10	88044	13	59
AN960PD10	88044	13	73
AN960PD10	88044	13	82
AN960PD10	88044	15	10A
AN960PD10	88044	15	45C
AN960PD10	88044	15	48A
AN960PD10	88044	17	14
AN960PD10	88044	17	22
AN960PD10	88044	21	50
AN960PD10	88044	22	
AN960PD10	88044	22	41E
AN960PD10	88044	28	
AN960PD10	88044	28	24G
AN960PD10	88044	29	28
AN960PD10	88044	31	
AN960PD10	88044	31	
AN960PD10	88044	32	
AN960PD10	88044	32	35
AN960PD10	88044	33	39C
AN960PD10	88044	33	41B
AN960PD10	88044	34	
AN960PD10	88044	45	11A
AN960PD10	88044	66	38
AN960PD10	88044	75	111
AN960PD10	88044	81	5A
AN960PD10	88044	88	84G
AN960PD10	88044	88	87A
AN960PD10	88044	95	23
AN960PD10	88044	95	27
AN960PD10	88044	QC1	
AN960PD10	88044	109	
AN960PD10	88044	109	77B
AN960PD10	88044	110	
AN960PD10	88044	112	34
AN960PD10	88044	112	78
AN960PD10	88044	116	
AN960PD10	88044	117	
AN960PD10	88044	119	
AN960PD10	88044	119	23
AN960PD10	88044	119	34
AN960PD10	88044	119	381
AN960PD10	88044	119	49
AN960PD10	88044	129	
AN960PD10	88044	129	23A
AN960PD10	88044	129	23F
AN960PD10	88044	129	23I
AN960PD10	88044	139	
AN960PD10	88044	154	2
AN960PD10	88044	178	71
AN960PD10	88044	182	
AN960PD10	88044	182	
AN960PD10	88044	188	
AN960PD10	88044	188	42
AN960PD10	88044	196	49C
AN960PD10	88044	201	60
AN960PD10	88044	204	1A
AN960PD10	88044	207	
AN960PD10	88044	207	
AN960PD10	88044	217	
AN960PD10	88044	217	4
AN960PD10	88044	218	
AN960PD10	88044	218	73C
AN960PD10	88044	218	73D
AN960PD10	88044	218	73E
AN960PD10	88044	218	74A
AN960PD10	88044	218	74C
AN960PD10	88044	220	
AN960PD10	88044	223	71
AN960PD10	88044	226	21
AN960PD10	88044	228	80
AN960PD10	88044	228	88
AN960PD10	88044	229	3
AN960PD10	88044	251	2
AN960PD10	88044	253	1B
AN960PD10	88044	255	
AN960PD10	88044	255	1A
AN960PD10	88044	255	10A
AN960PD10	88044	255	11C
AN960PD10	88044	255	16A
AN960PD10	88044	255	18A
AN960PD10	88044	256	19A
AN960PD10	88044	257	2C
AN960PD10	88044	275	
AN960PD10	88044	275	
AN960PD10	96906	279	
AN960PD10	88044	37B	14
AN960PD10	88044	37B	44
AN960PD10	88044	42A	3
AN960PD10	88044	42C	2
AN960PD10	88044	KITS	
AN960PD10C	88044	95	100
AN960PD10C	88044	95	110
AN960PD10C	88044	95	123
AN960PD10C	88044	95	13
AN960PD10C	88044	95	138
AN960PD10C	88044	95	163
AN960PD10C	88044	95	40
AN960PD10C	88044	95	41
AN960PD10C	88044	95	42
AN960PD10C	88044	95	43
AN960PD10C	88044	95	49
AN960PD10C	88044	95	52
AN960PD10C	88044	95	57
AN960PD10C	88044	95	7
AN960PD10C	88044	95	71
AN960PD10C	88044	95	82
AN960PD10C	88044	95	84
AN960PD10C	88044	95	88
AN960PD10C	88044	95	90
AN960PD10C	88044	95	99
AN960PD10L		KITS	
AN960PD10L	88044	10	
AN960PD10L	88044	10	
AN960PD10L	88044	11	39
AN960PD10L	88044	11	61B
AN960PD10L	88044	11	99
AN960PD10L	88044	13	16
AN960PD10L	88044	13	37
AN960PD10L	88044	13	61
AN960PD10L	88044	13	94

REFERENCE NUMBER	MFG CODE	FIG NUMBER	ITEM NUMBER
AN960PD10L	88044	13	97
AN960PD10L	88044	15	3B
AN960PD10L	88044	16	50
AN960PD10L	88044	18	
AN960PD10L	88044	18	
AN960PD10L	88044	18	
AN960PD10L	88044	18	30
AN960PD10L	88044	18	80
AN960PD10L	88044	19	9
AN960PD10L	88044	20	
AN960PD10L	88044	20	10
AN960PD10L	88044	20	19
AN960PD10L	88044	20	31
AN960PD10L	88044	20	36
AN960PD10L	88044	20	57
AN960PD10L	88044	20	6
AN960PD10L	88044	20	72
AN960PD10L	88044	22	
AN960PD10L	88044	25	8A
AN960PD10L	88044	28	
AN960PD10L	88044	28	14E
AN960PD10L	88044	28	33
AN960PD10L	88044	31	
AN960PD10L	88044	32	
AN960PD10L	88044	32	
AN960PD10L	88044	32	
AN960PD10L	88044	32	23
AN960PD10L	88044	32	36
AN960PD10L	88044	32	41
AN960PD10L	88044	32	53
AN960PD10L	88044	32	78
AN960PD10L	88044	33	23B
AN960PD10L	88044	33	38
AN960PD10L	88044	34	
AN960PD10L	88044	34	
AN960PD10L	88044	34	
AN960PD10L	88044	36	
AN960PD10L	88044	42	
AN960PD10L	88044	42	9B
AN960PD10L	88044	51	38A
AN960PD10L	88044	53	31A
AN960PD10L	88044	54	14
AN960PD10L	88044	62	
AN960PD10L	88044	62	38
AN960PD10L	88044	62	80
AN960PD10L	88044	66	34
AN960PD10L	88044	66	37
AN960PD10L	88044	71	2
AN960PD10L	88044	71	21B
AN960PD10L	88044	71	52
AN960PD10L	88044	75	7
AN960PD10L	88044	88	84E
AN960PD10L	88044	95	150
AN960PD10L	88044	95	161
AN960PD10L	88044	QC1	
AN960PD10L	88044	QC1	44
AN960PD10L	88044	QC1	52A
AN960PD10L	88044	109	
AN960PD10L	88044	11A	18B
AN960PD10L	88044	110	36A
AN960PD10L	88044	110	37A
AN960PD10L	88044	110	40A
AN960PD10L	88044	110	46A
AN960PD10L	88044	110	54
AN960PD10L	88044	110	57
AN960PD10L	88044	110	58
AN960PD10L	88044	110	63
AN960PD10L	88044	110	66
AN960PD10L	88044	110	67
AN960PD10L	88044	110	74
AN960PD10L	88044	110	75
AN960PD10L	88044	112	10
AN960PD10L	88044	112	105
AN960PD10L	88044	112	106
AN960PD10L	88044	112	108
AN960PD10L	88044	112	109
AN960PD10L	88044	112	110
AN960PD10L	88044	112	113
AN960PD10L	88044	112	116
AN960PD10L	88044	112	20
AN960PD10L	88044	112	26
AN960PD10L	88044	112	27
AN960PD10L	88044	112	28
AN960PD10L	88044	112	37
AN960PD10L	88044	112	4
AN960PD10L	88044	112	41
AN960PD10L	88044	112	45
AN960PD10L	88044	112	47
AN960PD10L	88044	112	5
AN960PD10L	88044	112	50
AN960PD10L	88044	112	53
AN960PD10L	88044	112	57
AN960PD10L	88044	112	61
AN960PD10L	88044	112	63
AN960PD10L	88044	112	69
AN960PD10L	88044	112	79
AN960PD10L	88044	112	9
AN960PD10L	88044	112	91
AN960PD10L	88044	115	
AN960PD10L	88044	116	
AN960PD10L	88044	117	
AN960PD10L	88044	119	
AN960PD10L	88044	119	256
AN960PD10L	88044	129	
AN960PD10L	88044	129	22B
AN960PD10L	88044	139	
AN960PD10L	88044	139	100
AN960PD10L	88044	139	102
AN960PD10L	88044	139	104
AN960PD10L	88044	139	107
AN960PD10L	88044	139	110
AN960PD10L	88044	139	112
AN960PD10L	88044	139	114
AN960PD10L	88044	139	115
AN960PD10L	88044	139	116
AN960PD10L	88044	143	
AN960PD10L	88044	151	2
AN960PD10L	88044	178	106
AN960PD10L	88044	178	126
AN960PD10L	88044	178	147
AN960PD10L	88044	179	46
AN960PD10L	88044	182	
AN960PD10L	88044	188	
AN960PD10L	88044	188	19A
AN960PD10L	88044	188	4
AN960PD10L	88044	188	42
AN960PD10L	88044	188	49C
AN960PD10L	88044	188	60
AN960PD10L	88044	191	2
AN960PD10L	88044	191	35
AN960PD10L	88044	191	39
AN960PD10L	88044	191	41
AN960PD10L	88044	191	7
AN960PD10L	88044	191	9
AN960PD10L	88044	195	
AN960PD10L	88044	195	2
AN960PD10L	88044	195	24
AN960PD10L	88044	195	27
AN960PD10L	88044	195	41
AN960PD10L	88044	195	45
AN960PD10L	88044	195	49
AN960PD10L	88044	195	5

REFERENCE NUMBER	MFG CODE	FIG NUMBER	ITEM NUMBER
AN960PD10L	88044	196	
AN960PD10L	88044	196	14
AN960PD10L	88044	196	37
AN960PD10L	88044	196	49B
AN960PD10L	88044	196	7C
AN960PD10L	88044	198	
AN960PD10L	88044	198	48
AN960PD10L	88044	200	
AN960PD10L	88044	204	
AN960PD10L	88044	204	25A
AN960PD10L	88044	204	6
AN960PD10L	88044	207	
AN960PD10L	88044	207	
AN960PD10L	88044	207	
AN960PD10L	88044	207	
AN960PD10L	88044	208	28
AN960PD10L	88044	208	32
AN960PD10L	88044	208	35
AN960PD10L	88044	208	4
AN960PD10L	88044	208	41
AN960PD10L	88044	209	1
AN960PD10L	88044	213	
AN960PD10L	88044	213	5
AN960PD10L	88044	217	
AN960PD10L	88044	218	
AN960PD10L	88044	219	
AN960PD10L	88044	220	
AN960PD10L	88044	221	
AN960PD10L	88044	221	10
AN960PD10L	88044	221	101
AN960PD10L	88044	221	102
AN960PD10L	88044	221	107
AN960PD10L	88044	221	111
AN960PD10L	88044	221	113
AN960PD10L	88044	221	114
AN960PD10L	88044	221	116
AN960PD10L	88044	221	119
AN960PD10L	88044	221	120
AN960PD10L	88044	221	127
AN960PD10L	88044	221	13
AN960PD10L	88044	221	130
AN960PD10L	88044	221	132
AN960PD10L	88044	221	138
AN960PD10L	88044	221	18
AN960PD10L	88044	221	18A
AN960PD10L	88044	221	20A
AN960PD10L	88044	221	21
AN960PD10L	88044	221	23
AN960PD10L	88044	221	31
AN960PD10L	88044	221	32
AN960PD10L	88044	221	33
AN960PD10L	88044	221	36
AN960PD10L	88044	221	40
AN960PD10L	88044	221	41
AN960PD10L	88044	221	43
AN960PD10L	88044	221	47
AN960PD10L	88044	221	51
AN960PD10L	88044	221	54
AN960PD10L	88044	221	55
AN960PD10L	88044	221	56
AN960PD10L	88044	221	57
AN960PD10L	88044	221	58
AN960PD10L	88044	221	6
AN960PD10L	88044	221	68
AN960PD10L	88044	221	69
AN960PD10L	88044	221	72
AN960PD10L	88044	221	75
AN960PD10L	88044	221	78
AN960PD10L	88044	221	83
AN960PD10L	88044	221	84
AN960PD10L	88044	221	88
AN960PD10L	88044	221	94
AN960PD10L	88044	228	57
AN960PD10L	88044	228	83
AN960PD10L	88044	229	11
AN960PD10L	88044	248	95
AN960PD10L	88044	249	28
AN960PD10L	88044	251	21
AN960PD10L	88044	253	24C
AN960PD10L	88044	253	27B
AN960PD10L	88044	253	43A
AN960PD10L	88044	255	3A
AN960PD10L	88044	256	10
AN960PD10L	88044	256	22C
AN960PD10L	88044	257	22F
AN960PD10L	88044	258	7B
AN960PD10L	88044	259	15D
AN960PD10L	88044	265	100
AN960PD10L	88044	265	102
AN960PD10L	88044	265	129
AN960PD10L	88044	265	13
AN960PD10L	88044	265	31
AN960PD10L	88044	265	33
AN960PD10L	88044	268	106
AN960PD10L	88044	268	119
AN960PD10L	88044	268	126
AN960PD10L	88044	268	182A
AN960PD10L	88044	268	52
AN960PD10L	88044	268	53
AN960PD10L	88044	268	80
AN960PD10L	88044	270	28A
AN960PD10L	88044	270	61C
AN960PD10L	88044	273	11B
AN960PD10L	88044	273	18D
AN960PD10L	88044	275	
AN960PD10L	88044	275	
AN960PD10L	88044	275	
AN960PD10L	88044	275	
AN960PD10L	88044	276	
AN960PD10L	88044	277	
AN960PD10L	88044	278	
AN960PD10L	88044	36A	15
AN960PD10L	88044	36A	34
AN960PD10L	88044	36A	40
AN960PD10L	88044	36B	
AN960PD10L	88044	36B	18
AN960PD10L	88044	37B	13
AN960PD10L	88044	37B	45
AN960PD10L	88044	KITS	
AN960PD10L	88044	217A	13
AN960PD10L	88044	217A	14
AN960PD10L	88044	217A	15
AN960PD10L	88044	217A	23
AN960PD10L	88044	217A	6
AN960PD10L	88044	217A	7
AN960PD10L	88044	217A	8
AN960PD10L	88044	217B	10
AN960PD10L	88044	217B	11
AN960PD10L	88044	217B	16
AN960PD10L	88044	217B	17
AN960PD10L	88044	217B	2
AN960PD10L	88044	217B	24
AN960PD10L	88044	217B	27
AN960PD10L	88044	217B	28
AN960PD10L	88044	217B	3
AN960PD10L	88044	217B	5
AN960PD10L	88044	217B	6
AN960PD10L	88044	219A	177
AN960PD10L	88044	219A	180
AN960PD10L	88044	219A	72
AN960PD10L	88044	219A	75
AN960PD10L	88044	219A	81

REFERENCE NUMBER	MFG CODE	FIG NUMBER	ITEM NUMBER
AN960PD1016	88044	21	3A
AN960PD1016	88044	11B	
AN960PD1016	88044	11B	84
AN960PD1016	88044	KITS	
AN960PD1016L	88044	21	3
AN960PD1016L	88044	11B	36A
AN960PD1016L	88044	KITS	
AN960PD1216	88044	109	48
AN960PD1216	88044	117	
AN960PD1216	88044	117	43A
AN960PD1216	88044	117	86
AN960PD1216	88044	117	87
AN960PD1216	88044	119	264
AN960PD1216	88044	129	
AN960PD1216	88044	129	102A
AN960PD1216	88044	129	112A
AN960PD1216	88044	129	39
AN960PD1216	88044	139	30
AN960PD1216	88044	139	31
AN960PD1216	88044	139	78
AN960PD1416	88044	117	
AN960PD1416	88044	119	260
AN960PD1416	88044	129	
AN960PD1416	88044	139	33
AN960PD1416	88044	139	81
AN960PD1416	88044	219	16
AN960PD1416	88044	219	90
AN960PD1416	88044	219A	153
AN960PD1416	88044	219A	54
AN960PD1416L	88044	129	56A
AN960PD1416L	88044	KITS	
AN960PD1616	88044	218	23
AN960PD1616	88044	219	19
AN960PD1616	88044	219	87
AN960PD1616	88044	219A	157
AN960PD1616	88044	219A	50
AN960PD1616L	88044	KITS	
AN960PD1716	88044	34	
AN960PD1716	88044	95	58
AN960PD1716	88044	129	102B
AN960PD1716	88044	139	51
AN960PD1716	88044	139	52
AN960PD1716	88044	139	98
AN960PD1716L	88044	76	28A
AN960PD1716L	88044	81	48
AN960PD1716L	88044	83	113
AN960PD2016L	88044	95	130
AN960PD2116	88044	129	45A
AN960PD2116	88044	213	
AN960PD2116	88044	213	18
AN960PD2116	88044	220	
AN960PD2116	88044	220	
AN960PD2116	88044	220	
AN960PD2116	88044	221	26
AN960PD2116	88044	221	28
AN960PD2116	88044	221	34
AN960PD2116	88044	221	67
AN960PD2116	88044	221	73
AN960PD2116	88044	221	76
AN960PD2116L	88044	213	
AN960PD2116L	88044	220	
AN960PD2116L	88044	BULK	
AN960PD2116L	88044	KITS	
AN960PD3	88044	265	160
AN960PD3	88044	265	162
AN960PD3	88044	265	168
AN960PD3	88044	265	227
AN960PD3	88044	265	229
AN960PD3	88044	265	27
AN960PD3	88044	265	42
AN960PD3	88044	265	44
AN960PD3	88044	265	70
AN960PD3	88044	268	
AN960PD3	88044	268	137A
AN960PD3	88044	268	42A
AN960PD3	88044	268	60
AN960PD3	88044	268	66
AN960PD3L	88044	BULK	
AN960PD4	88044	KITS	
AN960PD4L	88044	62	76
AN960PD4L	88044	QC1	
AN960PD4L	88044	188	
AN960PD4L	88044	195	33D
AN960PD4L	88044	204	
AN960PD4L	88044	204	13B
AN960PD4L	88044	268	151A
AN960PD4L	88044	275	
AN960PD4L	88044	275	28
AN960PD4L	88044	KITS	
AN960PD416	88044	11	145
AN960PD416	88044	11	149
AN960PD416	88044	13	39
AN960PD416	88044	13	66
AN960PD416	88044	13	9
AN960PD416	88044	15	17B
AN960PD416	88044	15	21B
AN960PD416	88044	15	27B
AN960PD416	88044	15	28C
AN960PD416	88044	15	31C
AN960PD416	88044	15	36A
AN960PD416	88044	15	43
AN960PD416	88044	15	6A
AN960PD416	88044	17	
AN960PD416	88044	17	2
AN960PD416	88044	17	7
AN960PD416	88044	18	
AN960PD416	88044	18	113
AN960PD416	88044	18	63
AN960PD416	88044	18	66
AN960PD416	88044	20	106
AN960PD416	88044	21	
AN960PD416	88044	21	27E
AN960PD416	88044	21	50A
AN960PD416	88044	21	61C
AN960PD416	88044	22	25B
AN960PD416	88044	22	5B
AN960PD416	88044	25	2B
AN960PD416	88044	25	35
AN960PD416	88044	28	40
AN960PD416	88044	31	
AN960PD416	88044	33	35A
AN960PD416	88044	36	11B
AN960PD416	88044	36	12C
AN960PD416	88044	36	18B
AN960PD416	88044	36	9A
AN960PD416	88044	62	
AN960PD416	88044	75	2
AN960PD416	88044	75	3
AN960PD416	88044	75	4
AN960PD416	88044	F16	20
AN960PD416	88044	F16	34
AN960PD416	88044	QC1	
AN960PD416	88044	QC1	32C
AN960PD416	88044	QC1	32D
AN960PD416	88044	109	13B
AN960PD416	88044	109	58C
AN960PD416	88044	109	61B
AN960PD416	88044	11A	14
AN960PD416	88044	117	
AN960PD416	88044	129	
AN960PD416	88044	139	
AN960PD416	88044	139	

REFERENCE NUMBER	MFG CODE	FIG NUMBER	ITEM NUMBER
AN960PD416	88044	158	9
AN960PD416	88044	207	
AN960PD416	88044	213	
AN960PD416	88044	218	11A
AN960PD416	88044	218	2
AN960PD416	88044	218	37
AN960PD416	88044	218	42
AN960PD416	88044	218	47
AN960PD416	88044	218	54
AN960PD416	88044	218	7
AN960PD416	88044	219	
AN960PD416	88044	219	21
AN960PD416	88044	219	36
AN960PD416	88044	219	40
AN960PD416	88044	219	49
AN960PD416	88044	219	5
AN960PD416	88044	219	56
AN960PD416	88044	219	66
AN960PD416	88044	219	81
AN960PD416	88044	219	96
AN960PD416	88044	220	
AN960PD416	88044	223	91
AN960PD416	88044	256	7
AN960PD416	88044	257	19D
AN960PD416	88044	258	11D
AN960PD416	88044	273	28
AN960PD416	88044	378	20
AN960PD416	88044	378	27
AN960PD416	88044	BULK	
AN960PD416	88044	KITS	
AN960PD416L	88044	13	91A
AN960PD416L	88044	15	6B
AN960PD416L	88044	18	
AN960PD416L	88044	18	107
AN960PD416L	88044	18	58
AN960PD416L	88044	18	70
AN960PD416L	88044	18	74
AN960PD416L	88044	20	
AN960PD416L	88044	20	
AN960PD416L	88044	20	24
AN960PD416L	88044	20	34
AN960PD416L	88044	20	36
AN960PD416L	88044	20	45
AN960PD416L	88044	20	59
AN960PD416L	88044	22	25A
AN960PD416L	88044	22	5A
AN960PD416L	88044	28	
AN960PD416L	88044	28	24U
AN960PD416L	88044	29	
AN960PD416L	88044	31	
AN960PD416L	88044	33	4
AN960PD416L	88044	34	
AN960PD416L	88044	62	
AN960PD416L	88044	66	41
AN960PD416L	88044	QC1	46A
AN960PD416L	88044	109	54B
AN960PD416L	88044	109	58B
AN960PD416L	88044	109	61C
AN960PD416L	88044	110	16
AN960PD416L	88044	112	39
AN960PD416L	88044	129	77
AN960PD416L	88044	139	
AN960PD416L	88044	207	
AN960PD416L	88044	208	25
AN960PD416L	88044	208	38
AN960PD416L	88044	213	
AN960PD416L	88044	218	
AN960PD416L	88044	218	11A
AN960PD416L	88044	218	18
AN960PD416L	88044	218	2
AN960PD416L	88044	218	28
AN960PD416L	88044	218	32
AN960PD416L	88044	218	37A
AN960PD416L	88044	218	42C
AN960PD416L	88044	218	7
AN960PD416L	88044	219	11
AN960PD416L	88044	219	24
AN960PD416L	88044	219	45
AN960PD416L	88044	219	62
AN960PD416L	88044	219	70
AN960PD416L	88044	219	92
AN960PD416L	88044	220	
AN960PD416L	88044	221	
AN960PD416L	88044	255	5B
AN960PD416L	88044	265	157
AN960PD416L	88044	265	184
AN960PD416L	88044	265	186
AN960PD416L	88044	265	274
AN960PD416L	88044	265	3
AN960PD416L	88044	265	47
AN960PD416L	88044	265	49
AN960PD416L	88044	265	51
AN960PD416L	88044	265	60
AN960PD416L	88044	265	62
AN960PD416L	88044	265	64
AN960PD416L	88044	265	9
AN960PD416L	88044	268	11
AN960PD416L	88044	268	147
AN960PD416L	88044	268	173A
AN960PD416L	88044	268	203A
AN960PD416L	88044	268	209
AN960PD416L	88044	268	230
AN960PD416L	88044	268	240A
AN960PD416L	88044	268	31
AN960PD416L	88044	268	4
AN960PD416L	88044	268	76
AN960PD416L	88044	273	22
AN960PD416L	88044	273	4A
AN960PD416L	88044	278	
AN960PD416L	88044	378	22
AN960PD416L	88044	378	29
AN960PD416L	88044	378	33
AN960PD416L	88044	KITS	
AN960PD416L	88044	219A	107
AN960PD416L	88044	219A	117
AN960PD416L	88044	219A	12
AN960PD416L	88044	219A	122
AN960PD416L	88044	219A	127
AN960PD416L	88044	219A	143
AN960PD416L	88044	219A	162
AN960PD416L	88044	219A	165
AN960PD416L	88044	219A	17
AN960PD416L	88044	219A	2
AN960PD416L	88044	219A	22
AN960PD416L	88044	219A	42
AN960PD416L	88044	219A	57
AN960PD416L	88044	219A	60
AN960PD516	88044	11	32
AN960PD516	88044	11	89
AN960PD516	88044	13	2C
AN960PD516	88044	21	54
AN960PD516	88044	21	61B
AN960PD516	88044	22	12A
AN960PD516	88044	22	17A
AN960PD516	88044	22	19A
AN960PD516	88044	22	22B
AN960PD516	88044	22	3A
AN960PD516	88044	22	32A
AN960PD516	88044	22	36
AN960PD516	88044	22	41C
AN960PD516	88044	22	6B
AN960PD516	88044	22	9A

REFERENCE NUMBER	MFG CODE	FIG NUMBER	ITEM NUMBER
AN960PD516	88044	36	
AN960PD516	88044	71	12
AN960PD516	88044	129	
AN960PD516	88044	264	
AN960PD516	88044	264	10A
AN960PD516	88044	KITS	
AN960PD516L	88044	11	88
AN960PD516L	88044	20	
AN960PD516L	88044	20	30
AN960PD516L	88044	20	55
AN960PD516L	88044	21	5
AN960PD516L	88044	21	54
AN960PD516L	88044	22	22A
AN960PD516L	88044	22	41B
AN960PD516L	88044	22	6A
AN960PD6	88044	13	97
AN960PD6	88044	18	132A
AN960PD6	88044	62	5
AN960PD6	88044	157	69
AN960PD6	88044	157	72
AN960PD6	88044	157	77
AN960PD6	88044	157	81
AN960PD6	88044	157	90
AN960PD6	88044	158	69
AN960PD6	88044	158	73
AN960PD6	88044	158	76
AN960PD6	88044	167	25
AN960PD6	88044	182	
AN960PD6	88044	188	
AN960PD6	88044	188	15
AN960PD6	88044	188	47A
AN960PD6	88044	189	7
AN960PD6	88044	196	
AN960PD6	88044	196	13B
AN960PD6	88044	196	26
AN960PD6	88044	196	34
AN960PD6	88044	196	51B
AN960PD6	88044	196	56
AN960PD6	88044	200	
AN960PD6	88044	204	
AN960PD6	88044	207	
AN960PD6	88044	228	
AN960PD6	88044	234	14
AN960PD6	88044	234	25
AN960PD6	88044	234	28
AN960PD6	88044	234	31
AN960PD6	88044	275	
AN960PD6	88044	275	
AN960PD6	88044	275	
AN960PD6	88044	275	
AN960PD6	88044	276	
AN960PD6	88044	277	
AN960PD6	88044	278	
AN960PD6	88044	KITS	
AN960PD6	88044	189A	26
AN960PD6L	88044	196	51C
AN960PD6L	88044	196	57
AN960PD6L	88044	265	211
AN960PD6L	88044	265	78
AN960PD6L	88044	268	158E
AN960PD6L	88044	268	36
AN960PD616	88044	11	127B
AN960PD616	88044	11	31
AN960PD616	88044	15	12
AN960PD616	88044	15	23A
AN960PD616	88044	15	8C
AN960PD616	88044	28	24N
AN960PD616	88044	43	13B
AN960PD616	88044	45	10A
AN960PD616	88044	75	64
AN960PD616	88044	F20	4
AN960PD616	88044	196	
AN960PD616	88044	207	
AN960PD616	88044	222	97
AN960PD616	88044	244	69
AN960PD616	88044	256	1
AN960PD616	88044	256	16
AN960PD616	88044	265	138
AN960PD616	88044	268	94
AN960PD616	88044	273	14A
AN960PD616	88044	KITS	
AN960PD616L	88044	20	66
AN960PD616L	88044	43	13D
AN960PD616L	88044	45	88
AN960PD616L	88044	KITS	
AN960PD716	88044	28	3A
AN960PD716	88044	28	4A
AN960PD716	88044	95	155
AN960PD716	88044	109	10
AN960PD716	88044	109	32
AN960PD716	88044	11B	122
AN960PD716	88044	110	
AN960PD716	88044	110	20
AN960PD716	88044	110	25
AN960PD716	88044	110	30
AN960PD716	88044	110	38
AN960PD716	88044	110	39
AN960PD716	88044	110	42
AN960PD716	88044	110	51
AN960PD716	88044	110	68
AN960PD716	88044	110	82
AN960PD716	88044	110	85
AN960PD716	88044	115	
AN960PD716	88044	115	1
AN960PD716	88044	115	10
AN960PD716	88044	115	11
AN960PD716	88044	115	13
AN960PD716	88044	115	15
AN960PD716	88044	115	19
AN960PD716	88044	115	22
AN960PD716	88044	115	26
AN960PD716	88044	115	3
AN960PD716	88044	115	34
AN960PD716	88044	115	8
AN960PD716	88044	116	
AN960PD716	88044	117	
AN960PD716	88044	117	19D
AN960PD716	88044	117	19I
AN960PD716	88044	117	25A
AN960PD716	88044	117	28B
AN960PD716	88044	119	
AN960PD716	88044	119	117
AN960PD716	88044	119	120
AN960PD716	88044	119	136
AN960PD716	88044	119	139
AN960PD716	88044	119	172
AN960PD716	88044	119	208
AN960PD716	88044	119	219
AN960PD716	88044	119	368
AN960PD716	88044	119	89
AN960PD716	88044	129	
AN960PD716	88044	129	35A
AN960PD716	88044	129	41A
AN960PD716	88044	129	53
AN960PD716	88044	129	61A
AN960PD716	88044	129	81A
AN960PD716	88044	129	84A
AN960PD716	88044	135	7
AN960PD716	88044	139	6
AN960PD716	88044	178	16
AN960PD716	88044	178	41
AN960PD716	88044	179	25B

REFERENCE NUMBER	MFG CODE	FIG NUMBER	ITEM NUMBER
AN960PD716	88044	179	9B
AN960PD716	88044	180	15A
AN960PD716	88044	180	20A
AN960PD716	88044	180	25A
AN960PD716	88044	213	
AN960PD716	88044	220	
AN960PD716	88044	KITS	
AN960PD716L	88044	32	58B
AN960PD716L	88044	95	155
AN960PD716L	88044	KITS	
AN960PD8	88044	18	
AN960PD8	88044	24	19B
AN960PD8	88044	28	14A
AN960PD8	88044	34	
AN960PD8	88044	37	46
AN960PD8	88044	42	
AN960PD8	88044	42	2A
AN960PD8	88044	110	64C
AN960PD8	88044	188	
AN960PD8	88044	188	63
AN960PD8	88044	189	40
AN960PD8	88044	196	
AN960PD8	88044	196	10B
AN960PD8	88044	204	
AN960PD8	88044	204	2B
AN960PD8	88044	253	4C
AN960PD8	88044	253	41
AN960PD8	88044	255	2B
AN960PD8	88044	255	21
AN960PD8	88044	265	134
AN960PD8	88044	265	22
AN960PD8	88044	268	
AN960PD8	88044	268	158
AN960PD8	88044	268	54
AN960PD8	88044	268	89
AN960PD8	88044	276	
AN960PD8	88044	276	
AN960PD8	88044	277	
AN960PD8	88044	278	
AN960PD8L	88044	10	1B
AN960PD8L	88044	20	
AN960PD8L	88044	31	
AN960PD8L	88044	39	
AN960PD8L	88044	188	
AN960PD8L	88044	188	
AN960PD8L	88044	188	
AN960PD8L	88044	188	58
AN960PD8L	88044	191	28
AN960PD8L	88044	191	3
AN960PD8L	88044	191	36
AN960PD8L	88044	195	
AN960PD8L	88044	195	31
AN960PD8L	88044	195	32A
AN960PD8L	88044	195	36
AN960PD8L	88044	195	39
AN960PD8L	88044	196	
AN960PD8L	88044	196	2A
AN960PD8L	88044	198	
AN960PD8L	88044	198	43
AN960PD8L	88044	204	
AN960PD8L	88044	204	19B
AN960PD8L	88044	251	58C
AN960PD8L	88044	255	12B
AN960PD8L	88044	255	15B
AN960PD8L	88044	265	282
AN960PD8L	88044	268	245A
AN960PD8L	88044	275	
AN960PD8L	88044	277	
AN960PD8L	88044	279	
AN960PD8L	88044	KITS	
AN960PD816	88044	F20	10
AN960PD816	88044	QC1	19A
AN960PD816	88044	222	60
AN960PD816	88044	222	97
AN960PD816	88044	244	
AN960PD816	88044	244	69
AN960PD816	88044	257	16B
AN960PD816	88044	257	18B
AN960PD816	88044	257	5B
AN960PD816	88044	257	7B
AN960PD816	88044	257	9B
AN960PD816	88044	264	14A
AN960PD816L	88044	11	91
AN960PD816L	88044	F15	28
AN960PD816L	88044	187	21
AN960PD816L	88044	222	60
AN960PD816L	88044	222	97
AN960PD816L	88044	244	
AN960PD816L	88044	244	69
AN960PD816L	88044	264	14
AN960PD816L	88044	KITS	
AN960PD916	88044	109	18
AN960PD916	88044	109	20
AN960PD916	88044	109	23
AN960PD916	88044	109	27
AN960PD916	88044	109	29
AN960PD916	88044	109	35
AN960PD916	88044	109	38
AN960PD916	88044	109	70
AN960PD916	88044	109	73
AN960PD916	88044	109	74
AN960PD916	88044	109	8
AN960PD916	88044	109	86
AN960PD916	88044	110	34
AN960PD916	88044	110	35
AN960PD916	88044	110	64
AN960PD916	88044	110	80
AN960PD916	88044	110	84
AN960PD916	88044	112	62
AN960PD916	88044	115	55
AN960PD916	88044	115	57
AN960PD916	88044	116	
AN960PD916	88044	117	
AN960PD916	88044	117	58E
AN960PD916	88044	117	91
AN960PD916	88044	117	98
AN960PD916	88044	119	237
AN960PD916	88044	119	242
AN960PD916	88044	119	247
AN960PD916	88044	119	250
AN960PD916	88044	129	37
AN960PD916	88044	129	41C
AN960PD916	88044	129	68A
AN960PD916	88044	139	105
AN960PD916	88044	139	108
AN960PD916	88044	139	13
AN960PD916	88044	139	15
AN960PD916	88044	139	18
AN960PD916	88044	139	27
AN960PD916	88044	139	28
AN960PD916	88044	139	43
AN960PD916	88044	139	47
AN960PD916	88044	139	59
AN960PD916	88044	139	67
AN960PD916	88044	139	74
AN960PD916	88044	178	131
AN960PD916	88044	178	38
AN960PD916	88044	178	80
AN960PD916	88044	213	
AN960PD916	88044	220	
AN960PD916	88044	221	133
AN960PD916	88044	221	19

REFERENCE NUMBER	MFG CODE	FIG NUMBER	ITEM NUMBER
AN960PD916	88044	221	22
AN960PD916	88044	221	25
AN960PD916	88044	221	63
AN960PD916	88044	221	66
AN960PD916	88044	221	7
AN960PD916	88044	221	95
AN960PD916	88044	251	18B
AN960PD916	88044	273	10B
AN960PD916	88044	KITS	
AN960PD916L	88044	51	25D
AN960PD916L	88044	62	27
AN960PD916L	88044	75	54
AN960PD916L	88044	117	100
AN960PD916L	88044	117	94
AN960PD916L	88044	119	232
AN960PD916L	88044	239	53
AN960PD916L	88044	251	36A
AN960PD916L	88044	KITS	
AN96010L		KITS	
AN961-4T	88044	190	11B
AN961-516	88044	193	7
AN961-6	88044	178	103
AN961-8	88044	262A	4
AN970-3	88044	210	66
AN970-3	88044	BULK	
AN970-4	88044	275	
AN970-4	88044	37A	38
AN970-4	88044	BULK	
AN970-7	88044	BULK	
AN970-8	88044	BULK	
AN975-3	88044	20	41
AN975-3	88044	20	81
AN975-3	88044	20	94
AN975-3	88044	253	44B
AN975-3	88044	255	4B
AN975-3	88044	256	14
AN975-3	88044	42B	18
AN9924-12D	88044	95	97
AN995C20		KITS	
AN996-22	88044	49	57D
AN996-22	88044	51	69
AP222T	61349	162	10
AP222U	61349	162	11
ARU12A	81349	157	37
ARU12A	77272	158	34
AR1247	98391	153	
AR1247	98391	KITS	
AR1248	98391	153	
AR1248	98391	KITS	
AS111-01-3	96124	150	3
AS112-23-05	96124	150	18
AS113-23-018	96124	150	8
AT10063	91929	268	
AT1061-9	81039	A24	
AT1890	81039	A27	5
AT1890-7	81039	A27	7
AT1901-6	81039	A17	3
AT2037	81039	A22	3
AT2037-8	81039	A22	4
AT2103	81039	A28	8
AT2652-4	81039	A27	9
AT3042	81039	A29	2
AT3281	77272	A13	7
AT916	81039	A24	6
AU621V18	61349	162	36
AU621V18	61349	162	39
AVR869	74063	198	26
AYRD367	05624	192	107
AYRD367	05624	233	13
AYRD590	05624	192	85
AYRD619	05624	192	63
AYRD690	05624	67A	67
AYRS365	05624	67A	38
AYRS366	05624	67A	52
AZ31B	81348	BULK	
A02CS023-1	77272	234	20
A02E5828-5	77272	F5	2
A02E5864-14	77272	F19	2
A02E5864-15	77272	F14	17
A02E5864-15	77272	F19	1
A02E5864-16	77272	F19	6
A02E5864-3	77272	F19	7
A02E5864-4	77272	F19	8
A02E5864-5	77272	F19	9
A02E5865-10	77272	F18	18
A02E5865-12	77272	F18	3
A02E5865-14	77272	F18	8
A02E5865-15	77272	F18	5
A02E5865-16	77272	F18	4
A02E5865-17	77272	F18	6
A02E5865-20	77272	F18	19
A02E5865-22	77272	F18	9
A02E5865-23	77272	F18	10
A02E5865-24	77272	F18	7
A02E5865-25	77272	F18	11
A02E5865-26	77272	F18	12
A02E5865-27	77272	F14	16
A02E5865-27	77272	F18	1
A02E5865-28	77272	F18	14
A02E5865-29	77272	F18	15
A02E5865-3	77272	F18	2
A02E5865-30	77272	F18	31
A02E5865-31	77272	F18	32
A02E5865-32	77272	F18	21
A02E5865-33	77272	F18	26
A02E5865-34	77272	F18	28
A02E5865-35	77272	F18	29
A02E5865-36	77272	F18	30
A02E5865-37	77272	F18	36
A02E5865-38	77272	F18	23A
A02E5865-39	77272	F18	33
A02E5865-5	77272	F18	20
A02E5865-6	77272	F18	17
A02E5865-9	77272	F18	16
A02E5876-15	77272	F20	29
A02E5876-24	77272	F20	25A
A02E5876-25	77272	F20	25
A02E5876-6	77272	F20	27
A02HS139-2	77272	100	1
A02HS139-3	77272	100	1
A02HS139-4	77272	100	1
A02HS139-5	77272	100	1
A02RS161-6	77272	69	3A
A02RS161-6	77272	70	18
A02R4050-1	77272	71	126
A02R4050-2	77272	71	126
A02R4051-1	77272	71	125
A02R4051-2	77272	71	125
A02S7103-12	77272	42A	24
A02S7103-12	77272	42C	24
A02S7103-13	77272	42A	29
A02S7103-13	77272	42C	30
A02S7103-17	77272	42A	30
A02S7103-17	77272	42B	85
A02S7103-17	77272	42C	31
A02S7103-29	77272	42A	32
A02S7103-29	77272	42C	33
A02S7103-4	77272	42A	5
A02S7103-48	77272	42A	22
A02S7103-48	77272	42C	25
A02S7103-6	77272	42A	21
A02S7103-6	77272	42C	22

REFERENCE NUMBER	MFG CODE	FIG NUMBER	ITEM NUMBER
A02S7103-7	77272	42A	23
A02S7103-7	77272	42C	23
A02S7128-7	77272	42A	39
A02S7128-7	77272	42C	36
A02S7136-3	77272	42A	32
A02S7136-3	77272	42C	33
A02S7136-4	77272	42A	32
A02S7136-4	77272	42C	33
A02S8109-1	77272	18	
A0508-0	61349	162	44
A0508W	61349	162	43
A075-100041-03	73949	226	35
A075-100041-04	73949	226	35
A1-4318-1	71643	BULK	
A10W500	91637	192	24
A1000	80510	160	58
A1001	80510	160	
A1003	80510	160	59
A1007	80510	160	65
A1010	80510	160	1
A1021	80510	160	75
A1022	80510	160	84A
A1023	80510	160	85
A104-1	80510	160	71
A104-2	80510	160	71
A104-3	80510	160	71
A104-4	80510	160	71
A1048	80510	160	62
A1049	80510	160	
A1050	01278	158	10
A1052	80510	160	
A1055	06275	160	82
A1056	06275	160	92
A1057	06275	160	91
A1058	80510	160	93
A1061	80510	160	17
A1063	80510	160	18
A1065	80510	160	
A1066	80510	160	9
A1068	80510	160	5
A1070	80510	160	12
A1071	80510	160	16
A1072	80510	160	19
A1073	80510	160	21
A1074	80510	160	20
A1082	80510	160	44
A1083	80510	160	45
A1084	80510	160	46
A1085	80510	160	42A
A1095	80510	160	32
A11-63-1A	36922	157	45
A11-63F	36922	157	45
A11C30	89513	251	31
A11C30	89513	260	
A1104	80510	160	
A1108	80510	160	2
A1110	80510	160	57
A1111	80510	160	50
A1112	80510	160	38
A1113	80510	160	41
A1114	80510	160	36
A112-1	70417	192	
A1120	80510	160	25
A1122	80510	160	22
A1126	80510	160	26
A1127	80510	160	47
A1134	80510	160	4
A1135	80510	160	
A1136	80510	160	3
A1137-1	80510	160	81
A1137-2	06275	160	81

REFERENCE NUMBER	MFG CODE	FIG NUMBER	ITEM NUMBER
A1137-3	80510	160	81
A1137-4	80510	160	81
A1137-5	80510	160	81
A1137-6	80510	160	81
A1137-7	80510	160	81
A1137-8	80510	160	81
A117SR290-75	90166	65	68
A1183-1	08242	190A	5
A13C86	58588	260	46
A1372	80510	160	7
A15D7527	83843	215	54A
A1554	80510	160	
A15778P211	00736	79	13
A1701	57771	169	18
A1701	57771	169	44
A1701	57771	169	53
A1701	57771	173	13
A1701	57771	173	28
A1701	57771	173	49
A1717	80510	160	68
A175-2SP	07936	189A	32
A1767	80510	160	69
A17715	00736	83	21H
A18D3284	83843	215	45
A18D3764	83843	215	54B
A182-000396-00	73949	205	23
A190586	25140	190	174
A19789-173	00736	96	16
A2A627	25140	190	172
A2IC14	89513	251	14
A2IC9934	83843	215	53
A218-101042-00	73949	226	43
A218-101043-00	73949	226	44
A218-101060-03	73949	226	12
A218-101060-03	73949	226	48
A219A52436-01	73949	205	41
A24110	12511	190A	24
A2501-02	72962	BULK	
A2560	12511	190A	40
A2728-3	72914	190	150
A2781-412	18965	135	18
A2888775-5	83843	215	45A
A297-1	08844	18	91E
A297-1	08844	18	98E
A297-1	08844	275	14E
A3-20	72794	182	
A3-20	72794	183	10
A3-20	72794	209	
A3-20	72794	KITS	
A3A1113	76912	36A	20
A3A1233	76912	36A	21
A3A1234	76912	36A	22
A3A1275	76912	36A	18
A3A1277	76912	36A	
A3A1586	76912	378	6
A3A1593	76912	378	5
A3A1641	76912	368	16
A3A1642	76912	368	
A3A1652	76912	368	10
A3A1657	76912	368	5
A3A415	76912	368	22
A3A421	76912	368	23
A3A618	76912	36A	13
A3A881	76912	368	15
A3B1279	76912	36A	10
A3B1280	76912	36A	
A3B1282	76912	36A	9
A3B1611	76912	378	8
A3B1624	76912	378	9
A3B1627	76912	378	10
A3B1644	76912	368	

REFERENCE NUMBER	MFG CODE	FIG NUMBER	ITEM NUMBER
A3B1645	76912	36B	
A3B1646	76912	36B	12
A3B1647	76912	36B	7
A3B1653	76912	36B	25
A3B1656	76912	36B	6
A3B897	76912	36A	4
A3B898	76912	36A	5
A3C1115A	76912	36A	3
A3C1601	76912	37B	11
A3C1623	76912	37B	
A3C1655	76912	36B	3
A31180	12511	190A	31
A3135-017-24A	78553	BULK	
A32C94	89513	260	1
A35AAU8AA	98810	157	57
A35AAU8AA	98810	158	52
A3551	72914	33	
A3801	97484	95	
A3801	97484	95	15B
A4-45	72794	196	
A4S4B2-095	77272	10	
A4S4B2-095	77272	10	31B
A40D553	25140	190	173
A4004	71984	MSUP	
A40176	12511	190A	29
A40177	12511	190A	30
A4405	04347	MSUP	
A45A28	58588	261	29
A451-33	99145	183	54
A47163	12511	190A	48
A4812	99145	183	61
A5S2B2-125	84256	11B	115A
A51141	12511	190A	33
A52A26	89513	262	56
A5326	72914	190	12
A56109	12511	190A	46
A5774	72914	190	
A5781	72914	190	
A60A48	89513	261	20
A6147	72914	197	27
A6265-8Z3	78553	42	5
A6287A	97404	95	167B
A6339	72914	190	
A65304	12511	190A	12
A65307	12511	190A	26
A6540	72914	190	105A
A6541	72914	190	
A6573	72914	190	71
A6574	72914	190	
A6576	72914	190	
A6577	72914	190	152
A6580	72914	190	69
A6582	72914	190	72
A6583	72914	190	
A6584	72914	190	
A6585A	72914	190	77
A6588	72914	190	131
A6590	72914	190	144
A6594	72914	190	152
A6595	72914	190	130
A6596	72914	190	139
A6597	72914	190	145
A6598	72914	190	138
A6627-10	15814	37B	31
A6627-20	15814	37B	24
A6632-1	15814	37B	38
A6632-2	15814	37B	39
A6728	15814	37B	41
A6776W	97484	89	14
A6786	15814	37B	21
A6786	15814	37B	28
A6870	72914	190	90
A6873	72914	190	148
A6873	72914	190	80
A6877	72914	190	87
A6878	72914	190	84
A6892	72914	190	136
A6901	72914	190	38
A6909	72914	190	122
A6910	72914	190	140
A6910	72914	190	23
A6912	72914	190	121
A6913	72914	190	125
A6914	72914	190	115
A6915	72914	190	101
A6916	72914	190	114
A6917	72914	190	110
A6918	72914	190	126
A6919A	72914	190	146
A6922	72914	190	
A6926	72914	190	33
A6927	72914	190	132
A6927	72914	190	30
A6928	72914	190	39
A6930	72914	190	37A
A6932	72914	190	57
A6933	72914	190	53
A6934	72914	190	52
A6939	72914	190	111
A6939-1032-24J	78553	157	39
A6939-1032-24J	78553	158	36
A6939-1032-24J	78553	KITS	
A6943	72914	190	147
A6944-1	72914	190	
A6944-1	72914	190	79
A6946	72914	190	49
A6947	72914	190	56
A6948	72914	190	55
A6954	72914	190	68A
A7-192	72121	182A	48
A7C3755	83843	215	61
A700AQ4	74063	209	32
A7033WB	97484	88	9
A73C65	89513	262	32
A73C65	89513	262A	
A7472	15814	37B	35
A7479	15814	37B	37
A7484	15814	37B	30
A7485	15814	37B	26
A7592	72914	197	30
A77C03	89513	251	33
A7739	72914	197	38
A7797	72914	190	
A7798	72914	190	74
A7799	72914	190	149
A7858-10	15814	36B	30
A7860	15814	36A	25
A7869-30	15814	36B	28
A7869-40	15814	36B	29
A8-4307	04347	MSUP	
A8C6308	83843	215	64
A80AAU8A	98810	157	57
A80AAU8A	98810	158	52
A80AAU8AA	98810	157	57
A80AAU8AA	98810	158	52
A80MA1	98810	157	57
A80MA1	98810	158	52
A80MB	98810	157	57
A80MB	98810	158	52
A8031-10	15814	36A	26
A8031-20	15814	36A	27
A810	97484	76	76

REFERENCE NUMBER	MFG CODE	FIG NUMBER	ITEM NUMBER
A8108A	72914	197	
A81420	96881	42A	16
A81420	96881	42C	17
A8155-30	15814	36B	32
A8155-40	15814	36A	42
A8201-70	15814	36A	36
A8201-80	15814	36A	37
A8202-40	15814	36B	33
A8299	97484	89	10
A8318	97484	75	86
A8404A3	72914	197	28
A8473-1	72914	197	23
A8477	72914	197	22
A8484	72914	197	19
A854A	97484	88	5
A8540-5-307	72914	188	46
A8540-5-307	72914	196	12
A8540-6-307	72914	188	45
A8540-6-307	72914	196	11
A86C35	89513	135	
A8824-4	72914	157	16
A8824-4	72914	158	17
A8950-1	72914	157	7
A8950-1	72914	158	7
A8950-1	72914	167	42
A8950-1	72914	182	
A8950-1	72914	201	55
A8970-1-327	72914	157	5
A8970-1-327	72914	158	5
A9D5630		215	44
A9D680	25140	190	171
A9D729	25140	190	165
A9106-1	72914	190	64
A9116-1	72914	190	157
A9116-2	72914	190	157
A9122-1	72914	197	48
A9123-1	72914	197	50
A93A75	89513	261	30
A96	03683	A2	
A97	77272	70	43
A9802-1	72914	197	13
A9921-1	72914	197	31
BACB10J2	81205	275	
BACB28T4-06	81205	BULK	
BACB28T4-13	77272	239	30
BACB28T4-13	77272	239	64
BACB28T4-15	77272	239	140
BACB28T4-18	77272	239	36
BACB28T4-18	77272	239	71
BACB28T4-23	77272	239	148
BACB28T4-25	77272	239	125
BACB28T4-35	77272	239	141
BACB28T5-22	77272	239	44
BACB28T5-27	77272	239	173
BACB28T6-21	77272	239	68
BACB28T6-24	77272	239	79
BACB28T6-30	77272	239	82
BACB28T6-35	77272	239	139
BACB28T8-19	77272	239	108
BACB28T8-38	77272	239	171
BACB28T9-24	77272	239	34
BACB28T9-35	77272	239	48
BACB30CC10W10	81205	BULK	
BACB30CC10W12	81205	BULK	
BACB30CC10W14	81205	BULK	
BACB30AY5W2	81205	BULK	
BACB30AY6W19	81205	BULK	
BACB30AY6W20	81205	BULK	
BACB30AY6W21	81205	BULK	
BACB30CCBW5	81205	BULK	
BACB30CC10W11	81205	BULK	
BACB30CC10W13	81205	BULK	
BACB30CC10W16	81205	BULK	
BACB30CC10W17	81205	BULK	
BACB30CC10W18	81205	BULK	
BACB30CC10W19	81205	BULK	
BACB30CC10W3	81205	BULK	
BACB30CC10W9	81205	BULK	
BACB30CC12W14	81205	BULK	
BACB30CC12W17	81205	BULK	
BACB30CC5-3	81205	BULK	
BACB30CC5W2	81205	BULK	
BACB30CC5W4	81205	BULK	
BACB30CC5W5	81205	BULK	
BACB30CC5W9	81205	BULK	
BACB30CC6-4	81205	BULK	
BACB30CC6W10	81205	BULK	
BACB30CC6W16	81205	BULK	
BACB30CC6W18	81205	BULK	
BACB30CC6W2	81205	21	22A
BACB30CC6W3	81205	BULK	
BACB30CC6W4	81205	BULK	
BACB30CC6W5	81205	BULK	
BACB30CC6W7	81205	BULK	
BACB30CC6W9	77272	BULK	
BACB30CC8-24	81205	118	
BACB30CC8W4	81205	BULK	
BACB30CC8W7	81205	BULK	
BACB30CG10-14	81205	BULK	
BACB30CG10-18	81205	BULK	
BACB30CG10-22	81205	BULK	
BACB30CG10-26	81205	BULK	
BACB30CG10-4	81205	BULK	
BACB30CG10-6	81205	BULK	
BACB30CG12-12	81205	BULK	
BACB30CG12-16	81205	BULK	
BACB30CG12-20	81205	BULK	
BACB30CG12-4	81205	BULK	
BACB30CG12-8	81205	BULK	
BACB30CG6-10	81205	BULK	
BACB30CG6-2	81205	BULK	
BACB30CG6-3	81205	BULK	
BACB30CG6-5	81205	BULK	
BACB30CG6-6	81205	BULK	
BACB30CG6-7	81205	BULK	
BACB30CG6-8	81205	BULK	
BACB30CG8-10	81205	BULK	
BACB30CG8-11	81205	BULK	
BACB30CG8-14	81205	BULK	
BACB30CG8-18	81205	BULK	
BACB30CG8-2	81205	BULK	
BACB30CG8-22	81205	BULK	
BACB30CG8-26	81205	BULK	
BACB30CG8-4	81205	BULK	
BACB30CG8-5	81205	BULK	
BACB30CG8-6	81205	BULK	
BACB30CG8-8	81205	BULK	
BACB30CH6-4	81205	BULK	
BACB30CW4-8	81205	81	149
BACB30CW5-14	81205	89	104
BACB30CW6-12	81205	76	165A
BACB30CW7-12	81205	76	165A
BACB30FD4H4	81205	75	102
BACB30FD5-18	77272	11	36
BACB30FD5H4	81205	75	96
BACB30FD6-18	81205	11	35
BACB30FM8-6	81205	71	115
BACB30HW10-12	81205	BULK	
BACB30HW10-16	81205	BULK	
BACB30HW10-20	81205	BULK	

REFERENCE NUMBER	MFG CODE	FIG NUMBER	ITEM NUMBER
BACB30HW10-4	81205	BULK	
BACB30HW10-8	81205	BULK	
BACB30HW12-12	81205	BULK	
BACB30HW12-16	81205	BULK	
BACB30HW12-20	81205	BULK	
BACB30HW12-4	81205	BULK	
BACB30HW12-8	81205	BULK	
BACB30JC8-14	81205	71	140
BACB30LC10-34D	81205	244	84
BACB30LC10-34D	81205	244	95
BACB30LC10-38D	81205	244	90
BACB30LC10-38D	81205	KITS	
BACB30LC10-40D	81205	244	79
BACB30LC10-55D	81205	244	56
BACB30LC12-132D	81205	75	47
BACB30LC12-26D	77272	72	1
BACB30LC12-32D	81205	72	40
BACB30LC12-32D	81205	72	72
BACB30LC12-40D	81205	72	41
BACB30LC12-40D	81205	72	73
BACB30LC5-85D	81205	71	131
BACB30LC6-31D	81205	222	172
BACB30LC6-31D	81205	222	91
BACB30LC6-31D	81205	244	62
BACB30LC6-33	81205	75	163
BACB30LC6-36DH	81205	75	66
BACB30LC6-42D	81205	KITS	
BACB30LC6-43D	81205	75	17
BACB30LC6-43D	81205	75	18
BACB30LC6-46D	81205	222	95
BACB30LC6-46D	81205	244	67
BACB30LC6-91D	81205	75	55
BACB30LC7-23D	81205	222	45
BACB30LC7-23D	81205	244	35
BACB30LC7-30D	81205	222	46
BACB30LC7-30D	81205	244	40
BACB30LC8-122D	81205	75	47
BACB30LC8-122D	81205	KITS	
BACB30LC8-31D	81205	222	198
BACB30LC8-31D	81205	222	209
BACB30LC8-31D	81205	222	78
BACB30LC8-31D	81205	222	82
BACB30LC8-31D	81205	244	52
BACB30LC8-31D	81205	244	62
BACB30LC8-31D	81205	244	84
BACB30LC8-31D	81205	244	95
BACB30LC8-34D	81205	222	208
BACB30LC8-34D	81205	222	81
BACB30LC8-35D	81205	222	158
BACB30LC8-35D	81205	222	53
BACB30LC8-35D	81205	244	47
BACB30LC8-38D	81205	222	197
BACB30LC8-38D	81205	222	77
BACB30LC8-38D	81205	244	90
BACB30LC8-4DH	81205	KITS	
BACB30LC8-40D	81205	244	79
BACB30LC8-50D	81205	222	58
BACB30LC8-50D	81205	244	56
BACB30LC8-53D	81205	222	163
BACB30LC8-53D	81205	222	177
BACB30LC8-53D	81205	222	58
BACB30LC8-53D	81205	222	95
BACB30LC8-53D	81205	244	56
BACB30LC8-53D	81205	244	67
BACB30LC8-56D	81205	75	18
BACB30LC9-91D	81205	75	55
BACB30L010-55D	81205	244	67
BACB30MT6T11	81205	81	183
BACB30MT6T11	81205	83	316
BACB30ST10-40	81205	244	79
BACB30ST10-40	81205	KITS	
BACB30ST12-25	81205	72	1
BACB30ST12-31	81205	72	40
BACB30ST12-31	81205	72	72
BACB30ST12-31	77272	KITS	
BACB30ST12-31	81205	72	41
BACB30ST12-39	81205	72	73
BACB30ST12-39	77272	KITS	
BACB30ST12-39	81205	222	172
BACB30ST6-31	81205	222	91
BACB30ST6-31	81205	244	62
BACB30ST6-31	81205	222	81
BACB30ST8-34	81205	KITS	
BACB30ST8-34	81205	244	79
BACB30ST8-40	81205	222	208
BACB30S78-34	81205	95	13
BACC10BA20	81205	45	
BACC10BF1350-05	81205	45	
BACC10BF1400-05	81205	28	24B
BACC13Y3-60	81205	BULK	
BACC13Y3-65	81205	28	14C
BACC15AF8A	81205	204	
BACD5C605	81205	BULK	
BACE10E1	81205	28	24C
BACF22U2	81205	BULK	
BACF22U3	81205	220	
BACG10AD16	81205	221	32
BACG10AD16	81205	221	36
BACG10AD16	81205	221	56
BACG10AD16	81205	221	57
BACG10AD16	81205	221	69
BACG10AD16	81205	KITS	
BACG20AA1	81205	62	
BACJ40A20-5	77272	33	
BACJ40A20-5	77272	34	
BACJ40CF12E	81205	275	
BACJ40W1-7	81205	16	
BACM10L4WH	81205	196	6
BACM10M1BLX	81205	74	25
BACM10V2AWA	81205	196	60
BACM10V2AWB	81205	196	61
BACNDZ3-300	81205	BULK	
BACN10A02	81205	20	12
BACN10BL4L	81205	62	
BACN10BL4L	77272	QC1	26
BACN10BL4L	81205	11B	1
BACN10BL4L	81205	KITS	
BACN10BL4L	77272	11	29
BACN10BL6L	81205	11	78
BACN10BL8L	81205	240	3
BACN10BL8L	81205	43	2
BACN10B17	81205	43	1
BACN10B482	81205	229	44
BACN10CP3L	81205	42B	24
BACN10CP3L	81205	42B	25
BACN10CP4L	81205	21	
BACN10CP5L	81205	11	104
BACN10CP6L	81205	11	84A
BACN10CP6L	81205	11	96
BACN10CP6L	81205	11	92
BACN10CP8H	81205	81	149A
BACN10CT4	81205	89	102
BACN10CT5	77272	76	164A
BACN10CT6	81205	76	164A
BACN10CT7	81205	95	5
BACN10DR20D	81205	BULK	
BACN10DZ3-100	81205	BULK	
BACN10DZ3-120	81205	BULK	
BACN10DZ3-140	81205	BULK	
BACN10DZ3-150	81205	BULK	
BACN10DZ3-160	81205	BULK	
BACN10DZ3-20	81205	BULK	
BACN10DZ3-200	81205	BULK	

REFERENCE NUMBER	MFG CODE	FIG NUMBER	ITEM NUMBER
BACN10DZ3-220	77272	BULK	
BACN10DZ3-240	77272	BULK	
BACN10DZ3-260	77272	BULK	
BACN10DZ3-280	81205	BULK	
BACN10DZ3-30	81205	BULK	
BACN10DZ3-60	72962	42	
BACN10DZ3-80	81205	BULK	
BACN10ENTB3	81205	BULK	
BACN10EN34	81205	180	41
BACN10EN55	81205	BULK	
BACN10FC5A4	81205	BULK	
BACN10FX1	81205	KITS	
BACN10GH3-1	81205	BULK	
BACN10GH3-10	81205	258	9A
BACN10GH3-12	81205	BULK	
BACN10GH3-14	81205	253	29A
BACN10GH3-14	81205	258	11A
BACN10GH3-15	81205	BULK	
BACN10GH3-16	81205	258	7A
BACN10GH3-18	81205	BULK	
BACN10GH3-2	81205	BULK	
BACN10GH3-28	77272	253	30D
BACN10GH3-3	81205	BULK	
BACN10GH3-4	81205	BULK	
BACN10GH3-8	81205	BULK	
BACN10GR1	81205	83	144
BACN10GR1	81205	83	340
BACN10GR10	81205	76	171
BACN10GR13	81205	83	312
BACN10GR14	81205	81	140
BACN10GR14	77272	83	272
BACN10GR15	81205	81	159
BACN10GR16	81205	91	19
BACN10GR17	81205	81	161
BACN10GR18	77272	83	241
BACN10GR2	81205	81	189
BACN10GR20	81205	81	138
BACN10GR20	81205	83	269
BACN10GR4	81205	76	137
BACN10GR4	81205	83	199
BACN10GR6	81205	76	64
BACN10GR6	81205	76	90
BACN10GR7	81205	81	177
BACN10GR7	81205	83	330
BACN10GR8	81205	83	311
BACN10GR9	81205	81	179
BACN10GR9	81205	83	185
BACN10MK3-45	81205	253	30E
BACN10MK3-65	81205	42	
BACN10MK3-65	81205	253	24D
BACN10MK3-85	77272	223	
BACN10MS15-10	81205	BULK	
BACN10MS3-10	81205	BULK	
BACN10MS3-12	81205	BULK	
BACN10MS3-14	81205	11	19
BACN10MS3-16	81205	BULK	
BACN10MS3-18	77272	BULK	
BACN10MS3-20	81205	BULK	
BACN10MS3-22	81205	BULK	
BACN10MS3-24	81205	BULK	
BACN10M53-8	81205	BULK	
BACN10NX32-12	77272	BULK	
BACN10NX32-14	81205	BULK	
BACN10NX32-4	77272	BULK	
BACN10NX32-8	77272	BULK	
BACN10RJ6	81205	90	1
BACN10RJ6	81205	90	9
BACN10RJ6	81205	90	9A
BACN10RJ6	81205	KITS	
BACN10RJ9N	81205	76	130A
BACN10RJ9N	81205	92	14A
BACN10RJ9N	81205	92	15
BACN10RJ9N	81205	92	22
BACN10RJ9N	81205	92	40
BACN10RJ9N	81205	92	40A
BACN10RJ9N	81205	92	46
BACN10RJ9N	81205	92	54
BACN10RJ9N	81205	92	54A
BACN10RJ9N	81205	92	63
BACN10RJ9N	81205	92	70
BACN10RJ9N	81205	92	70A
BACN10RJ9N	81205	92	8
BACN10RJ9N	81205	92	93
BACN10RJ9N	81205	92	98
BACN10RJ9N	81205	92	98A
BACN10RJ9N	81205	KITS	
BACN10TR14	81205	91	1
BACN10TR14	81205	KITS	
BACN10TR18	81205	81	2
BACN10TR18	81205	83	1A
BACN10TR18	81205	KITS	
BACN10TR8	81205	76	1A
BACN10TW6	81205	81	182
BACN10TW6	81205	83	318
BACN12M1UH	81205	76	
BACN12W2T	81205	28	24D
BACP10C5	77272	182	16
BACP10U0300AB	81205	BULK	
BACP11P112	81205	76	144E
BACP11P119	81205	KITS	
BACP11P13	81205	71	38A
BACP11P13	81205	71	89
BACP11P13	81205	KITS	
BACP11P144	81205	KITS	
BACP11P19	81205	KITS	
BACP11P228		KITS	
BACP11P228	81205	71	103
BACP11P239	81205	76	150
BACP11P239	81205	76	87
BACP11P246	81205	76	124
BACP11P248	81205	76	168B
BACP11P248	81205	76	62
BACP11P248	81205	89	75
BACP11P249	81205	76	125
BACP11P249	81205	76	69
BACP11P249	81205	89	69
BACP11P252		KITS	
BACP11P252	81205	71	100
BACP11P255		KITS	
BACP11P255	81205	71	29
BACP11P255	81205	89	6
BACP11P258		KITS	
BACP11P258	81205	71	21F
BACP11P259	81205	76	75
BACP11P262		KITS	
BACP11P262	81205	71	19
BACP11P262	81205	71	21D
BACP11P265	81205	76	53
BACP11P327	81205	89	132
BACP11P362		KITS	
BACP11P362	81205	71	29A
BACP20B43	81205	198	16
BACP20B43	81205	198	17
BACP20B43	81205	198	18
BACP20B43	81205	201	
BACP20B43	81205	209	12
BACR10V3	81020	229	43
BACR10V3	81205	BULK	
BACR11X1C	77272	BULK	
BACR11X1DK	77272	BULK	
BACR11Y3C	81205	62	7C

REFERENCE NUMBER	MFG CODE	FIG NUMBER	ITEM NUMBER
BACR12A12S	81205	59	16
BACR14CJ910	77272	191	
BACR14CJ910	77272	195	
BACS11U2SK	81205	76	179D
BACS11U2SK	77272	76	58B
BACS11U2SK	81205	83	107
BACS11U2SK	81205	88	24D
BACS11U2SK	81205	88	84H
BACS11U2SK	77272	88	87B
BACS11U2SK	81205	89	118
BACS11W-3C	77272	178	105
BACS11W3C	77272	275	
BACS11W4AH	81205	219A	141
BACS11W4A11	81205	219A	29
BACS11W4C	77272	BULK	
BACS18P3A2P	81205	15	
BACS21AR1	81205	BULK	
BACS21DB1B	81205	81	203
BACS21DB2	81205	76	31A
BACS21DB3	81205	87	30A
BACS21DB4	81205	87	31
BACS21DB9	81205	87	27A
BACS21DD1	81205	BULK	
BACS21Y3R	81205	33	57
BACS21Y6R	81205	33	56
BACS21Y6R	81205	62	7E
BACS40L16-52	81205	BULK	
BACS40L16-60	81205	BULK	
BACS40R7B26	81205	BULK	
BACS40SD10-104	81205	BULK	
BACS40SD16-38	81205	BULK	
BACT12C15	81205	BULK	
BACT63A59-0	81205	BULK	
BACW10AKC4	81205	81	149C
BACW10AKC5	81205	89	105
BACW10AKC6	81205	76	165B
BACW10AKC6	81205	81	183A
BACW10AKC6	81205	83	317
BACW10AKC7	81205	76	165B
BACW10AKC8	81205	69	1A
BACW10AKC8	81205	70	15A
BACW10AKP4	81205	81	149B
BACW10AKP6	81205	76	165
BACW10AKP7	81205	76	165
BACW10AKR5	81205	89	103
BACW10BD1	81205	BULK	
BACW10BP6P	81205	81	182B
BACW10BP6P	81205	83	319
BACW10P16S	81205	11B	79
BACW10P45S	81205	42B	63
BACW10P63S	81205	70	4
BACW10P63S	81205	229	18
BACW10P63S	81205	KITS	
BACW10UC102	81205	BULK	
BACW10X2S	77272	62	7D
BACW10X4	81204	KITS	
BAC10DZ3-20	81205	BULK	
BAC1503-100043	81205	BULK	
BAC1503-1420	81205	BULK	
BAC1503-1491	81205	BULK	
BAC1503-5814	81205	BULK	
BAC1505-100023	81205	BULK	
BAC1505-100104	81205	BULK	
BAC1505-100511	81205	BULK	
BAC1505-100515	81205	BULK	
BAC1506-1698	81205	BULK	
BAC1517-1521X8FT	81205	BULK	
BAC1521-669-120	81205	BULK	
BAC1521-69	81205	BULK	
BAC1530-36	81205	BULK	
BAC1530-43	81205	BULK	
BAC1530-48	81205	BULK	
BA10A1H	92215	BULK	
BA10A15H	92215	BULK	
BA10A5H	92215	BULK	
BA10A6H	92215	BULK	
BA10A8H	92215	BULK	
BA10326-302	64959	BULK	
BA12A12H	92215	BULK	
BA6A11H	92215	BULK	
BA6A14H	98524	BULK	
BA6A5F	92215	BULK	
BB432A	80058	207	14
BB432A	80058	208	15
BC30C03	89513	262	16
BD30C03	89513	262	14
BE30C03	89513	262	15
BF13305	99539	34	
BLFR4	81376	228	135
BLYH57	05624	192	106
BMA169	73949	205	33
BM4002-0	71286	BULK	
BM482-1	73949	226	41
BR1174	73949	225	23
BR140AB	74063	198	35
BR1428L	73949	226	52
BR1428R	73949	226	51
BSSR8420	81376	62	
BSSR8420	81376	118	20
BS78403	83058	BULK	
BUA9-1	77949	205	35
BU304	70436	100	4
BX2520	85323	157	66
BYLH168	05624	233	9
BYLH502-3	05624	233	5
BYLH523-7	05624	233	16
BYLH554-35	05624	233	8
BYLH554-51	05624	233	12
BYLH554-59	05624	233	8
BYLH554-60	05624	233	7
BYLH554-61	05624	233	9
BYLH554-62	05624	233	10
BYLH57	05624	192	103
BYLH72	05624	233	10
BYLH74	05624	192	104
BYLH76	05624	233	11
BYRB338	05624	233	
BYRF1023	05624	192	65
BYRF1040	05624	67A	33
BYRF1075	05624	67A	30
BYRF1109	05624	192	90
BYRF1244	05624	67A	69
BYRF2056	05624	192	97
BYRF2697	05624	67A	19
BYRF2698	05624	67A	20
BYRF2726	05624	67A	6
BYRF298	05624	67A	43
BYRF647	05624	192	67
BYRF732	43999	192	72
BYRF78	03624	67A	16
BYRG180	05624	233	26
BYRG293	05624	192	121
B0020-14211	13903	157	57
B0020-14211	13903	158	52
B0310	70436	100	3
B08D31		260	62
B08D31		KITS	
B09C00	89513	251	19
B09C33	89513	251	25
B11C30	89513	251	31
B11C30	89513	260	
B118-138	36536	167	39

REFERENCE NUMBER	MFG CODE	FIG NUMBER	ITEM NUMBER	REFERENCE NUMBER	MFG CODE	FIG NUMBER	ITEM NUMBER
B12017	36536	186	23	B6908-1	72914	190	94
B13750	01121	204A	5A	B6921-3	72914	190	106
B138AT	74063	198	34	B6925	72914	190	135
B140AA	74063	198	37	B7669B	97484	76	108
B140AC	74063	198	38	B7669B	97484	81	32A
B17999	00736	96	4	B7669B	97484	83	109A
B18019	00736	79	14	B7672	97484	76	109B
B1845	02121	184	39	B7672	97484	81	33B
B18698	00736	83	21G	B7672	97484	83	1108
B19475	00736	79	14	B7674A	97484	76	109
B20C71	89513	261	16	B7674A	97484	81	33
B2278	99866	A6		B7674A	97484	83	110
B267-14	36536	167	45	B777128-1	19315	165	39
B3140-2	99866	A6		B777128-2	19315	165	39
B3550-307	72914	33	34G	B83A25	89513	262	37
B401	61864	18		B8500-23D1683	72914	196	67
B401	61864	18	93F	B8729	72914	157	14
B401	61864	18	96A	B8729	72914	158	15
B401	61864	18	99F	B96A55	89513	260	63
B401	61864	KITS		B9730-1	72914	196	
B42-624SP4	97393	BULK		CABOSILGDM5-10LBBG	80798	MSUP	
B4420		KITS		CAP2171	92798	BULK	
B45AS	60380	233	3	CAY682	99200	68	65
B478-4	36536	182	32	CCCF46CL2-36-50YD	81348	BULK	
B478-4	36536	186		CD4	95760	BULK	
B479-2	36536	211		CEC3335	07060	62	
B52C98	89513	251	41	CET20-11	71468	189A	
B52C98	89513	261		CF11-4MILG3278	92563	F15	12
B539DDFS160	38443	265	259	CH109AZ	94988	210	27
B539DDFS160	38443	265	263	CH109AZR	94988	210	30
B539DDFS160	38443	268	188	CH22	75543	192	
B540DD	21335	223	66	CH4360D	61349	162	48
B541DD	21335	25	19	CI103A	55719	A53	
B541DD	21335	25	9				
B541ZZ	21335	25	19				
B541ZZ	21335	25	9	CK05CW471K	81349	189	21
B541ZZ	38443	223	176	CK05CW471K	81349	189A	109
B541ZZ	38443	223	185	CK05CW471K	81349	189A	55
B542DD	21335	223	225	CK06CW332K	81349	189A	115
B542DD	21335	223	229	CK17AX104K	81349	189A	73
B542DD	21335	223	231	CK4D	82402	265	287
B542DD	21335	223	235	CLARCOJEC	91608	MSUP	
B542DD	21335	223	237	CLM1159-1C	08844	18	91J
B542DD	21335	235	21	CLM1159-1C	08844	18	98J
B542DD	21335	235	25	CLM1159-1C	08844	275	14J
B542DD	21335	235	31	CL032-1	46384	BULK	
B542DD	21335	235	36	CL1HK2A	99862	281	11
B542DDFS160	21335	BULK		CL100-3-60	99862	BULK	
B543DDFS10160S3	21335	239	32	CL104	08844	18	91
B543DDFS10160S3	21335	239	66	CL104	08844	18	98
B543ZZ	38443	239	32	CL104	08844	11A	1A
B543ZZ	38443	239	66	CL21BJ180TPE	81349	192	42
B544DD	21335	239	28	CL21BL120TPE	81349	184	44
B544DD	21335	239	62	CL53	73949	226	39
B6529-1	72914	190		CL65BN4R7KPE	81349	173	19
B6529-1	72914	190	60	CM15FD101G03	81349	190	158
B6530-1	72914	190		CR13F685KL	81349	194	108
B6530-1	72914	190	98	CR13F685KL	81349	194	112
B6618	72914	157	17	CR13F685KL	81349	194	189
B6618	72914	157	23	CR13F685KL	81349	204A	36
B6618	72914	157	32	CSR13E156KL	81349	192	38
B6618	7291-	157	55	CSR13E276KM	81349	189A	75
B6618	72914	157	61	CSR13F226KL	81349	189	34
B6618	72914	158	25	CSR13G475KM	81349	189A	89
B6618	72914	158	32	CS13BF105K	02567	194	113
B6618	72914	158	50	CS13BF105K	02567	194	131
B6618	72914	158	56	CS138A	73949	225	11
B6626-1	72914	157	49	CS259	73949	225	15
B6626-1	72914	158	44	CS395	73949	226	55
B6702	72914	190	17	CVA1224M	12427	BULK	
B6880-4	72914	190	83A	CVC754-220D13	80378	57	13

REFERENCE NUMBER	MFG CODE	FIG NUMBER	ITEM NUMBER
CVC754-220D13	80378	58	12
CVC754-248D17	80378	20	59
CV4-10	05972	MSUP	
CYLH539-7	05624	233	1
CYLH541-2	05624	233	17
CYLH553-11	05624	233	14
CYLH568	05624	233	4
CYLZ1103-1	05624	192	
CYRB126	05624	232	36
CYRB278-1	05624	67A	51
CYRB279-1	05624	67A	55A
CYRB280-1	05624	67A	27
CYRB285	05624	67A	77
CYRB286	05624	67A	76
CYRB66-1	05624	192	122
CYRD188	05624	192	73
CYRD190	05624	192	71
CYRD21	05624	192	13
CYRD235	05624	192	83
CYRD238	05624	233	15
CYRD245	05624	192	
CYRD247	05624	67A	13
CYRD257	05624	192	101
CYRD257	05624	192	99
CYRD310-1	05624	67A	32
CYRD310-5	05624	67A	32
CYRD331	05624	232	11
CYRD347	05624	67A	53
CYRD379	05624	192	105
CYRD379	05624	233	6
CYRD379	05624	67A	65
CYRD446	05624	67A	61
CYRD446	05624	67A	65
CYRD456	05624	192	
CYRD484	05624	192	
CYRD500	05624	67A	50
CYRD501	05624	67A	50
CYRD53	05624	192	
CYRD53	05624	192	31
CYRD53	05624	192	48
CYRD627	05624	67A	25
CYRD633	05624	232	35
CYRD634	05624	67A	28
CYRD708	05624	192	123
CYRD815	05624	67A	50
CYRD816	05624	67A	54
CYRD817	05624	67A	54
CYRD818	05624	67A	28
CYRD822	05624	67A	65
CYRS24	05624	67A	74
CYZP403-1	05624	192	78
CYZP453	05624	232	16
CYZP457	05624	67A	21
CYZP458	05624	67A	21A
CYZR372	05624	192	
CYZR446	05624	192	16
CYZR485	05624	192	88
CYZR641	05624	232	30
CYZR833	05624	67A	14
COSMOLUBE615	73277	MSUP	
C08D31	89513	260	61
C08D31		KITS	
C115-11-1	14672	37	
C115-15-13	14672	37	10
C115-15-14	14672	37	10
C115-15-17	14672	37	21
C115-15-18	14672	37	21
C115-16-101	14672	37	
C115-17-101	14672	37	
C115-23-1	14672	37	31
C115-27-1	14672	37	

REFERENCE NUMBER	MFG CODE	FIG NUMBER	ITEM NUMBER
C115-28-17	14672	37	
C115-28-5	14672	37	
C115-29-1	14672	37	6
C115-29-2	14672	37	6
C115-35-1	14672	37	8
C115-35-11	14672	37	9
C115-35-15	14672	37	
C115-35-17	14672	37	
C115-35-2	14672	37	8
C115-35-21	14672	37	
C115-36-1	14672	37	12
C115-38-13	14672	37	19
C115-5-1	14672	37	8
C115-5-15	14672	37	
C115-5-2	14672	37	8
C115-5-3	14672	37	9
C115-6-113	14672	37	13
C115-6-115	14672	37	16
C115-6-121	14672	37	
C115-6-123	14672	37	
C115-6-125	14672	37	15
C115-6-27	14672	37	17
C115-6-31	14672	37	18
C115-8-13	14672	37	
C115-8-3	14672	37	24
C115-9-1	14672	37	27
C115-9-13	14672	37	
C115-9-21	14672	37	
C115-9-23	14672	37	29
C115-9-37	14672	37	
C115-9-41	14672	37	
C115-9-5	14672	37	
C115-9-7	14672	37	28
C1254ARN30		182	4
C13C86	58588	260	47
C1517ARC51X		182	56
C1611AIC		182	47
C1736T170	01014	F23	
C1827ARC55		182	15
C2275ARN59	80058	182	5
C25A523	25140	190	
C26601-1	99215	123	19
C26601-15	99215	123	16
C26601-17	99215	123	3
C26601-18	99215	123	4
C26601-3	99215	123	7
C26601-4	99215	123	10
C26601-7	99215	123	6
C26601-8	99215	123	13
C26602-1	99215	123	8
C26602-2	99215	123	5
C26602-4	99215	123	7
C26603-11	99215	123	3
C26603-2	99215	123	8
C26603-3	99215	123	9
C26603-4	99215	123	7
C26603-5	99215	123	10
C26603-7	99215	123	5
C26605-16	99215	123	8
C26605-17	99215	123	5
C2714APX44		182	18
C2893410007	89944	157	57
C2893410007	89944	158	52
C3A1203	25140	190	
C312009277	81996	192	
C319RTV	71643	MSUP	
C32C94	89513	260	2
C320	70752	MSUP	
C3436AARN30D		182	53
C3436ARN30D		182	40
C3835ARC54		182	64

REFERENCE NUMBER	MFG CODE	FIG NUMBER	ITEM NUMBER
C4	79934	50	16
C4F10511-1	71867	34	
C4013ARC51X		182	56
C4677ARC51X		182	56
C6280APX72		182	70
C6287ARC51BX		182	56
C62928	06275	160	56
C63109	80510	160	29
C63501	80510	160	37
C63501	80510	160	43
C63502X	80510	160	55
C63504	80510	160	42
C63506	80510	160	30
C63507	80510	160	49
C63508	80510	160	54
C63903	80510	160	48
C63909	80510	160	53
C63909	80510	160	61
C64104-1	80510	160	11
C64104-2	80510	160	11
C64104-3	80510	160	11
C6873ARN82		182	66
C6899ARN83		182	53
C7088ARC131		182	64
C7197ARC134		182	71
C773L	81668	197	36
C80B	80510	182	48
C80B		182	49
C8157ARC		182	69
C93A81	89513	261	33
DBM25P4	71468	189A	39
DBM25P4	71468	189A	83
DCBL304C	08844	270	5
DCBL308C	08844	263	1
DCM37SC33	91146	182	
DC20963	71468	BULK	
DC37PC26	71468	BULK	
DC4563	96717	BULK	
DC510-100	71984	MSUP	
DC510-200	71984	MSUP	
DC510-500	71984	MSUP	
DH9H	74063	198	36
DIRLLUMN0603	99251	MSUP	
DIT240	80223	189A	92
DIT283	80223	189A	112
DL15	43991	151	13
DL15		KITS	
DM103-01MFD	71590	192	94
DM9700-3S045	11193	45	
DM97007-7SB045	11193	45	
DM97007-7S045	11193	45	
DPA24C2-33S	71468	BULK	
DPA24HV2-33S	71468	BULK	
DPA29C1-33SA101	71468	BULK	
DPD2-156-33SM	71468	BULK	
DPD2-156-34PFA95	71468	BULK	
DPD45-33SIL	71468	BULK	
DPE60-33S	71468	BULK	
DW61-1000-22	95135	MSUP	
DX518683-3	14418	BULK	
DYKEMSTEELBLUE	98148	MSUP	
DYLM42901-1	05624	67A	72
DYLM504-22	05624	67A	73
DYLM513-4	78488	67A	75
DYLZ1071	05624	67A	71
DYRA259-2	05624	67A	41
DYRF260	05624	192	15
DYRF375	05624	67A	24
DYRF96	05624	192	82
D070110HB	93712	248	
D070110HB	93712	248	34

REFERENCE NUMBER	MFG CODE	FIG NUMBER	ITEM NUMBER
D1724B	04773	192	
D22061-04-004	89944	157	57
D22061-04-004	89944	158	52
D22061-04-004	89944	170	
D2206104010	89944	157	57
D2206104010	89944	158	52
D2206104010	89944	170	
D236	70622	MSUP	
D4-250	00141	190A	34
D6890-5A	72914	190	
D6890-5A	72914	190	25
D6903-1	72914	190	93
D6923	72914	190	24
D6924	72914	190	15
D6940A1	72914	190	
D6940A1	72914	190	41
D9437-2	72914	197	7
EAB10	81996	MSUP	
EAB1400	81996	BULK	
EAB1405	81996	BULK	
EAB170	81996	BULK	
EAB20	81996	MSUP	
EAB210	81996	BULK	
EAB621	81996	BULK	
EAB622-2	81996	BULK	
EAB623-4	81996	BULK	
EAB665	81996	BULK	
EAB700-10	81996	42	
EAB700-10	81996	QC1	
EAB700-10	81996	143	
EAB700-10	81996	217	
EAB700-10	81996	KITS	
EAB700-10	81996	217B	5
EAB700-10	81996	217B	6
EAB700-11	81996	QC1	
EAB700-11	81996	143	
EAB700-11	81996	217	
EAB700-11	81996	217A	5
EAB700-12	81996	QC1	
EAB700-12	81996	143	
EAB700-12	81996	217	
EAB700-12	81996	217A	5
EAB700-12	81996	217A	6
EAB700-12	81996	217A	7
EAB700-12	81996	217B	10
EAB700-12	81996	217B	5
EAB700-12	81996	217B	9
EAB700-13	81996	BULK	
EAB700-15	81996	QC1	
EAB700-15	81996	BULK	
EAB700-16	81996	QC1	
EAB700-16	81996	143	
EAB700-16	81996	211	
EAB700-16	81996	218	62A
EAB700-16	81996	218	68A
EAB700-16	81996	218	69A
EAB700-16	81996	219	
EAB700-16	81996	249	20C
EAB700-16	81996	KITS	
EAB700-16	81996	217A	13
EAB700-16	81996	217B	16
EAB700-17	81996	BULK	
EAB700-17	81996	217A	22
EAB700-17	81996	217A	23
EAB700-18	81996	QC1	
EAB700-18	81996	BULK	
EAB700-2	81996	62	82
EAB700-2	81996	QC1	
EAB700-2	81996	KITS	
EAB700-20	81996	BULK	
EAB700-25	81996	BULK	

REFERENCE NUMBER	MFG CODE	FIG NUMBER	ITEM NUMBER
EAB700-28	81996	BULK	
EAB700-3	81996	210	92
EAB700-3	81996	270	8
EAB700-4	81996	QC1	
EAB700-4	81996	BULK	
EAB700-4	81996	KITS	
EAB700-5	81996	QC1	
EAB700-5	81996	BULK	
EAB700-5	81996	KITS	
EAB700-5	81996	217B	2
EAB700-5	81996	217B	27
EAB700-5	81996	217B	28
EAB700-5	81996	217B	3
EAB700-6	81996	QC1	
EAB700-6	81996	143	
EAB700-6	81996	217	
EAB700-6	81996	219	
EAB700-6	81996	KITS	
EAB700-6	81996	219A	82
EAB700-6	81996	219A	91
EAB700-7	81996	QC1	
EAB700-7	81996	143	
EAB700-8	81996	QC1	
EAB700-8	81996	117	
EAB700-8	81996	143	
EAB700-8	81996	KITS	
EAB700-8	81996	217A	23
EAB700-8	81996	217B	17
EAB700-8	81996	217B	24
EAB700-8	81996	217B	27
EAB700-9	81996	QC1	
EAB700-9	81996	143	
EAB700-9	81996	217A	13
EAB700D10	81996	62	
EAB700D10	81996	76	12
EAB700D10	81996	109	
EAB700D10	81996	115	
EAB700D10	81996	119	
EAB700D10	81996	129	
EAB700D10	81996	139	
EAB700D10	81996	211	
EAB700D10	81996	213	
EAB700D10	81996	217	
EAB700D10	81996	220	
EAB700D10	81996	221	113
EAB700D10	81996	221	119
EAB700D10	81996	221	120
EAB700D10	81996	221	139
EAB700D10	81996	KITS	
EAB700D11	81996	95	171
EAB700D11	81996	139	
EAB700D11	81996	208	14
EAB700D11	81996	221	128
EAB700D11	81996	221	132
EAB700D11	81996	221	94
EAB700D11	81996	KITS	
EAB700D11	81996	219A	93
EAB700D12	81996	62	
EAB700D12	81996	95	139
EAB700D12	81996	129	
EAB700D12	81996	139	
EAB700D12	81996	182	
EAB700D12	81996	KITS	
EAB700D13	81996	95	49
EAB700D14	81996	112	20
EAB700D14	81996	207	
EAB700D14	81996	208	11
EAB700D14	81996	217	
EAB700D14	81996	KITS	
EAB700D15	81996	62	
EAB700D15	81996	95	100
EAB700D15	81996	95	104
EAB700D15	81996	95	107
EAB700D15	81996	95	108
EAB700D15	81996	95	110
EAB700D15	81996	95	52
EAB700D15	81996	95	83
EAB700D15	81996	95	85
EAB700D15	81996	95	86
EAB700D15	81996	95	87
EAB700D15	81996	95	88
EAB700D15	81996	95	89
EAB700D15	81996	95	90
EAB700D15	81996	95	96
EAB700D15	81996	95	99
EAB700D15	81996	129	
EAB700D16	81996	62	
EAB700D16	81996	129	
EAB700D16	81996	182	
EAB700D16	81996	220	
EAB700D16	81996	220	17
EAB700D16	81996	220	20
EAB700D16	81996	220	23
EAB700D16	81996	221	101
EAB700D16	81996	221	42
EAB700D16	81996	221	43
EAB700D16	81996	221	47
EAB700D16	81996	221	48
EAB700D16	81996	221	51
EAB700D16	81996	221	54
EAB700D16	81996	258	70
EAB700D16	81996	277	
EAB700D16	81996	KITS	
EAB700D17	81996	129	
EAB700D18	81996	95	100
EAB700D18	81996	95	109
EAB700D18	81996	95	84
EAB700D18	81996	95	87
EAB700D18	81996	95	91
EAB700D18	81996	95	99
EAB700D18	81996	129	
EAB700D18	81996	KITS	
EAB700D19	81996	95	57
EAB700D19	81996	129	
EAB700D2	81996	234	29
EAB700D2	81996	256	19B
EAB700D2	81996	256	24
EAB700D2	81996	270	61B
EAB700D20	81996	62	
EAB700D20	81996	95	14
EAB700D20	81996	95	24
EAB700D20	81996	95	28
EAB700D20	81996	95	40
EAB700D20	81996	95	41
EAB700D20	81996	95	42
EAB700D20	81996	95	6
EAB700D20	81996	116	
EAB700D20	81996	221	127
EAB700D20	81996	221	128
EAB700D20	81996	249	30
EAB700D20	81996	KITS	
EAB700D21	81996	BULK	
EAB700D21	81996	KITS	
EAB700D22	81996	62	
EAB700D22	81996	95	43
EAB700D22	81996	95	75
EAB700D22	81996	182	
EAB700D22	81996	95	121
EAB700D23	81996	95	122
EAB700D23	81996	95	123
EAB700D23	81996	95	138
EAB700D23	81996	95	139

REFERENCE NUMBER	MFG CODE	FIG NUMBER	ITEM NUMBER
EAB700D23	81996	95	140
EAB700D23	81996	95	44
EAB700D23	81996	95	7
EAB700D24	81996	182	
EAB700D24	81996	277	
EAB700D24	81996	KITS	
EAB700D25	81996	BULK	
EAB700D26	81996	BULK	
EAB700D27	81996	253	23A
EAB700D28	81996	182	
EAB700D28	81996	253	24A
EAB700D29	81996	BULK	
EAB700D3	81996	109	
EAB700D3	81996	119	
EAB700D3	81996	265	212
EAB700D3	81996	268	158C
EAB700D3	81996	275	30
EAB700D30	81996	BULK	
EAB700D32	81996	109	
EAB700D32	81996	139	
EAB700D32	81996	277	
EAB700D32	81996	KITS	
EAB700D33	81996	253	30C
EAB700D33	81996	BULK	
EAB700D35	81996	BULK	
EAB700D35	81996	KITS	
EAB700D4	81996	62	
EAB700D4	81996	95	158
EAB700D4	81996	95	161
EAB700D4	81996	109	
EAB700D4	81996	110	36A
EAB700D4	81996	110	37A
EAB700D4	81996	110	40A
EAB700D4	81996	110	46A
EAB700D4	81996	110	54
EAB700D4	81996	110	57
EAB700D4	81996	110	58
EAB700D4	81996	110	66
EAB700D4	81996	110	67
EAB700D4	81996	110	71
EAB700D4	81996	110	74
EAB700D4	81996	110	76
EAB700D4	81996	110	87
EAB700D4	81996	110	89
EAB700D4	81996	110	90
EAB700D4	81996	110	94
EAB700D4	81996	110	95
EAB700D4	81996	110	96
EAB700D4	81996	110	97
EAB700D4	81996	110	98
EAB700D4	81996	110	99
EAB700D4	81996	112	105
EAB700D4	81996	112	106
EAB700D4	81996	112	108
EAB700D4	81996	112	109
EAB700D4	81996	112	110
EAB700D4	81996	112	113
EAB700D4	81996	112	116
EAB700D4	81996	112	26
EAB700D4	81996	112	27
EAB700D4	81996	115	
EAB700D4	81996	116	
EAB700D4	81996	116	28B
EAB700D4	81996	117	
EAB700D4	81996	119	
EAB700D4	81996	129	
EAB700D4	81996	139	
EAB700D4	81996	139	115
EAB700D4	81996	139	116
EAB700D4	81996	178	113
EAB700D4	81996	178	72
EAB700D4	81996	179	33
EAB700D4	81996	206	10
EAB700D4	81996	206	7
EAB700D4	81996	206	9
EAB700D4	81996	221	18A
EAB700D4	81996	221	20A
EAB700D4	81996	221	84
EAB700D4	81996	256	23
EAB700D4	81996	257	9D
EAB700D4	81996	37A	12
EAB700D4	81996	37A	23
EAB700D4	81996	KITS	
EAB700D40	81996	95	65
EAB700D40	81996	95	71
EAB700D40	81996	95	75
EAB700D44	81996	95	15
EAB700D5	81996	95	140
EAB700D5	81996	112	4
EAB700D5	81996	115	
EAB700D5	81996	116	
EAB700D5	81996	119	
EAB700D5	81996	273	
EAB700D5	81996	277	
EAB700D5	81996	KITS	
EAB700D6	81996	42	
EAB700D6	81996	109	
EAB700D6	81996	110	63
EAB700D6	81996	110	74
EAB700D6	81996	110	75
EAB700D6	81996	110	76
EAB700D6	81996	110	77
EAB700D6	81996	112	17
EAB700D6	81996	112	37
EAB700D6	81996	112	53
EAB700D6	81996	112	57
EAB700D6	81996	112	61
EAB700D6	81996	112	63
EAB700D6	81996	112	9
EAB700D6	81996	115	
EAB700D6	81996	116	
EAB700D6	81996	117	
EAB700D6	81996	119	
EAB700D6	81996	129	
EAB700D6	81996	139	
EAB700D6	81996	139	102
EAB700D6	81996	139	104
EAB700D6	81996	139	107
EAB700D6	81996	139	110
EAB700D6	81996	139	114
EAB700D6	81996	178	114
EAB700D6	81996	178	140
EAB700D6	81996	206	6
EAB700D6	81996	206	7
EAB700D6	81996	206	8
EAB700D6	81996	206	9
EAB700D6	81996	213	
EAB700D6	81996	220	37
EAB700D6	81996	220	42
EAB700D6	81996	221	14
EAB700D6	81996	221	15
EAB700D6	81996	221	18A
EAB700D6	81996	221	20A
EAB700D6	81996	221	24
EAB700D6	81996	221	65
EAB700D6	81996	221	8
EAB700D6	81996	257	9E
EAB700D6	81996	265	187
EAB700D6	81996	268	233
EAB700D6	81996	KITS	
EAB700D7	81996	62	
EAB700D7	81996	95	144

REFERENCE NUMBER	MFG CODE	FIG NUMBER	ITEM NUMBER
EAB700D7	81996	95	57
EAB700D7	81996	11A	188
EAB700D7	81996	112	10
EAB700D7	81996	116	
EAB700D7	81996	117	
EAB700D7	81996	119	
EAB700D7	81996	221	42
EAB700D7	81996	221	43
EAB700D8	81996	62	
EAB700D8	81996	95	163
EAB700D8	81996	119	
EAB700D8	81996	129	
EAB700D8	81996	139	
EAB700D8	81996	139	100
EAB700D8	81996	182	
EAB700D8	81996	226	23
EAB700D8	81996	269	1A
EAB700D8	81996	270	61B
EAB700D8	81996	277	
EAB700D8	81996	KITS	
EAB700D9	81996	112	4
EAB700D9	81996	112	5
EAB700D9	81996	119	
EAB700D9	81996	139	
EAB700D9	81996	213	
EA1030-070-2	62983	62	71
EA1030-070-3	62983	62	71
EA1030-070-3	62983	63	
EA32180-4	36536	186	3
EA71311-3	36536	186	27
EA71327-2	36536	186	1
EA71327-2	36536	186	22
EA72753	36536	186	13
EA93337-1	36536	186	26
EB048	72962	BULK	
EB070	72962	11B	121
EB080	72962	BULK	
EB098	72962	BULK	
EB108	72962	BULK	
EB126	72962	BULK	
EB616-20	17564	61	11
EB616-20	17564	61	34
EB616-21	17564	60	32
EB616-21	17564	60	6
EC1103-50ZTU	04963	MSUP	
EC1128	04963	MSUP	
EC1130EC1063	76381	BULK	
EC1130EC1063	76381	MSUP	
EC1184	76381	MSUP	
EC1202-032-62	76381	BULK	
EC1202-032THK8750WD200FTLG	76381	BULK	
EC1239B2	76381	MSUP	
EC1252	04963	BULK	
EC1252	04963	MSUP	
EC1357-1QTCN	76381	MSUP	
EC14		KITS	
EC1675B2	04963	MSUP	
EC678-1QTCN	76381	MSUP	
EC750	76381	MSUP	
EC801	76381	MSUP	
EC801-807	76381	MSUP	
EC801ANDEC1063	76381	MSUP	
EC870	76381	MSUP	
EL200AT331K	20932	204A	
EL50AT184K	20932	204A	63
EL50AT393K	20932	204A	44
ENSN22-7	56878	BULK	
EPON934	33564	MSUP	
EPOLUX100E6	93981	MSUP	
EPOLUX100E6AS	93981	MSUP	
EPONVI	86961	MSUP	
EPON8	86961	MSUP	
EPON828-1PTCN	86961	MSUP	
EPON828-1QTCN	86961	MSUP	
EPON901	99515	189A	29
EP36076	83527	MSUP	
EP711TYPEB2	92003	129	
ER784-161610	92003	129	63A
ER784C161612	92003	139	37
ER784D160410	92003	139	85
ER784D160410	62017	192	
ER798	92003	178	77
ER804D060406	92003	139	30
ER804D080810	92003	139	78
ER804D081008	92003	251	
ER816-6	92003	251	35
ER816-6	92003	178	50
ER824D060604	92003	139	35
ER833D0810	92003	139	83
ER833D0810	92003	139	38
ER833D1610	92003	139	86
ER833D1610	92003	178	91
ER834D060406	20309	275	22
ESD195397GP1	20309	275	22
ESD195397GP2	20309	275	20
ESD195397GP3	20309	275	22
ESD195397GP4	56878	270	50
EWB26-4H8	56878	49	50C
EWSB26-7-48	56878	76	38
EWSN22-4	56878	81	78
EWSN22-4	56878	87	10
EWSN22-5	56878	87	13
EWSN22-5	56878	87	16
EWSN22-5	56878	92	1A
EWSN22-5	56878	92	59
EWSN22-5	56878	KITS	
EWSN22-5	56878	81	100
EWSN22-8	56878	83	252
EWSN22-8	92555	74	79
EX38725	92555	74	83
EX39370	05624	192	12
EYZP307	89513	251	43
E08C92		KITS	
E1024	81039	230	31
E1024	81039	230	59
E1024	81039	231	29
E1024	81039	231	74
E1024	81039	231	77
E1024		KITS	
E1356	81039	230	21
E1356		KITS	
E1356M3	81039	230	18
E1356M3		231	95
E1471		KITS	
E1471		KITS	
E1471M1	81039	230	72
E1471M1	81039	231	96
E1471M1		KITS	
E1641	81039	230	65
E1641	81039	231	69
E1641	81039	230	24
E190M15	81039	230	47
E190M19		KITS	
E194M3	81039	230	25
E194M3	81039	231	45
E194M3		231	41
E1943M3		KITS	
E1943M3	81039	230	23
E195M7	81039	230	46
E195M7	81039	231	50
E195M7	81039	230	39
E201M7			

REFERENCE NUMBER	MFG CODE	FIG NUMBER	ITEM NUMBER
E2175M1		KITS	
E2175M1	81039	230	67
E2175M1	81039	231	56
E2206104016	89944	157	57
E2206104016	89944	158	52
E2300M10	81039	230	
E2301M2	81039	230	41
E2460		KITS	
E2460	81039	230	66
E2460	81039	231	55
E2740M39	81039	230	
E2740M40-1	81039	231	125
E2740M40-2	81039	231	126
E2740M41	81039	231	
E2740M47-1	81039	230	79
E2740M47-2	81039	230	80
E2740M48	81039	230	
E2740M57-1	81039	230	
E2833A	16193	MSUP	
E30016	81039	230	
E30016	81039	KITS	
E30017	81039	230	
E30017	81039	KITS	
E30018	81039	231	
E30018	81039	KITS	
E30019-1	81039	231	
E30019-1	81039	KITS	
E30021	81039	230	
E3188	81039	230	56
E3188M1		KITS	
E3188M1	81039	230	
E3188M1	81039	230	43
E322D	24727	188	8
E3270M1	81039	230	
E3270M5	81039	230	
E3274		KITS	
E3274	81039	230	36
E3274	81039	231	84
E3275	81039	230	35
E3275	81039	231	87
E3276	81039	230	30
E3276	81039	231	86
E3462	01881	190	48
E3649M2	81039	231	108
E3789	01881	190	50
E382M1	81039	230	89
E3924	81039	230	29
E3924	81039	231	83
E3928	81039	231	90
E3928		KITS	
E4594M2	81039	230	64
E4594M2	81039	231	76
E4595M5	81039	230	44
E4595M6	81039	230	57
E4624M10	81039	230	73
E4624M12	81039	231	106
E4624M13	81039	230	73
E4624M13-2	81039	230	73
E4627		KITS	
E4627	81039	230	58
E4627	81039	231	73
E4627-1	81039	230	
E4684		KITS	
E4684	81039	230	34
E4684	81039	231	80
E489	81039	230	38
E4965		KITS	
E4965	81039	230	71
E4965	81039	231	94
E5406		231	31
E5406		KITS	
E5604		KITS	
E6011M31	81039	231	17
E621-7	99145	167	13
E7518		KITS	
E7518	81039	230	50
E779		KITS	
E779	81039	230	70
E779	81039	231	93
E7887	81039	230	
E8046	81039	231	28
E878		KITS	
E878	81039	230	10
E878	81039	230	61
E878	81039	230	68
E878	81039	230	7
E878	81039	231	5
E878	81039	231	70
E878	81039	231	8
E878M2	81039	230	62
E878M2	81039	230	69
E878M2	81039	230	8
E878M2	81039	231	6
E878M2	81039	231	71
E878M2	81039	231	97
E878M2		KITS	
E878M2ALT		KITS	
E90Y3	54636	MSUP	
E9091M2	81039	230	9
E9091M2	81039	231	7
E9099-1	81039	231	102
E9100	81039	231	101
E9101-1	81039	231	103
E9101-2	81039	231	104
E9102	81039	231	99
E9106	81039	231	114
E9107M1	81039	231	
E9108M1	81039	231	113
E9112	81039	231	110
E9113	81039	231	
E9118	81039	231	58
E9124	81039	231	100
E9161		KITS	
E9161	81039	230	52
E9165		230	54
E9165		KITS	
E9167	81039	230	51
E9168		KITS	
E9168	81039	230	49
E9172M2	81039	230	3
E9172M2	81039	231	1
E9172M3	81039	231	1
E9172M4	81039	230	3
E9172M5	81039	230	3
E9172M6	81039	231	1
E9172M7	81039	230	3
E9172M7	81039	231	1
E9172M9	81039	230	3
E9176	81039	230	11
E9176	81039	231	14
E9177	81039	230	13
E9177	81039	231	16
E9187	81039	231	88
E9205	81039	231	57
E9526DD632-3	81039	230	76
FA203-2	70152	211	24A
FCB32460	00333	211	53B
FCB32460	00333	218	56B
FCB32460	00333	219	100
FCB32460	00333	219	51B
FCB47217	00333	211	53A
FCB47217	00333	218	56A

REFERENCE NUMBER	MFG CODE	FIG NUMBER	ITEM NUMBER
FCB47217	00333	219	51A
FCB47217	00333	219	99
FCC56310	00333	211	
FCC56310	00333	218	
FCC56310	00333	219	
FCR49800	89616	211	53
FDA4048	98313	263	11B
FDC3605M22	98313	F16	32
FDC3835-8	98313	36	23
FDC3860-24	98313	36	22
FDC3860-27	98313	36	22
FDC4145	98313	11A	62B
FEDGGGC613TY4CLA	81348	A55	
FELPROC5	73165	MSUP	
FFIL0-203SS	19315	165	38
FFIL003	89944	171	63
FFIL207CD	89944	171	62
FFIL212	89944	BULK	
FFIL303	89944	BULK	
FFIL407B	89944	BULK	
FFIL409B	89944	BULK	
FFIL415	89944	BULK	
FFIL609	89944	BULK	
FHS440-4	46384	204A	138
FN22-428	56878	83	254
FN22-428	56878	89	2
FN22-428	56878	89	66
FN22-428	56878	KITS	
FN22-524	56878	75	100
FN22A524	56878	11	14
FN22A524	56878	11	30
FN22A524	56878	89	77
FN22A524	56878	118	12
FN22A524	56878	118	2
FN22A524	56878	KITS	
FN22MH28	56878	81	166
FN22M1414	56878	91	1
FN22M1812	56878	81	2
FN22M1812	56878	83	1A
FN22M428	56878	75	100
FN22M428	56878	75	119
FN22M428	56878	75	128
FN22M428	56878	75	89
FN22M428	56878	88	49
FN22M524	56878	75	100
FN22M524	56878	75	94
FN22M524	56878	81	143
FN22M524	56878	83	277
FN22M524	56878	83	284
FN22M624	56878	75	165
FN22M624	56878	76	164A
FN22M624	56878	81	182
FN22M624	56878	83	318
FN22M624	56878	92	5
FN22M624	56878	11C	50
FN22M624	56878	KITS	
FN22M624	17279	KITS	
FN22M820	56878	76	1A
FORMAGASKET2	77247	MSUP	
FP38-1	73949	205	44
FR23-411973	99539	34	
FT01-0B2	85371	190	78
FT319	70436	100	2
FT99A30	89513	261	22
FYLM10	05624	192	111
FYLM10	05624	233	23
FYLM11-1	05624	192	114
FYLM11-1	05624	233	24
FYLM13	05624	192	116
FYLM23500-6	05624	192	108
FYLM23510-12	05624	232	50
FYLM23510-12	05624	233	
FYLM23510-13	05624	232	50
FYLM23510-13	05624	233	
FYLM45	05624	192	117
FYLM504-7	05624	192	110
FYLM504-7	05624	233	20
FYLM505-007	05624	233	27
FYLM505-024	05624	192	120
FYLM514-1	05624	192	115
FYLM515-2	05624	192	113
FYLM521-1	05624	233	31
FYLM523-29	05624	233	30
FYLM9	05624	192	112
FYLM9	05624	233	22
FYRE12	05624	67A	11
FYRE18	05624	192	14
FYRE33	05624	192	74
FYRE43	05624	192	23
F07C05	89513	251	16
F115	03914	34	
F12NE4753-108	72962	244	82
F22A27M22-40	72962	192	
F22LHA27M22-40	72962	182A	10
F22LHA27M22-40	72962	182A	5
F2452-048	72962	226	27
F2452-126	72962	11	74
F3C1032	85639	KITS	
F3C1032-1	85639	228	137
F3C428-1	85639	228	129B
F3C832-1	85639	228	129D
F30C14	89513	262	58
F30C14		KITS	
F377-1V1	97896	202	1
F377-1V10	97896	202	10
F377-1V12	97896	202	12
F377-1V13	97896	202	13
F377-1V14	97896	202	14
F377-1V15	97896	202	15
F377-1V16	97896	202	16
F377-1V17	97896	202	17
F377-1V18	97896	202	18
F377-1V2	97896	202	3
F377-1V20	97896	202	20
F377-1V21	97896	202	21
F377-1V22	97896	202	21A
F377-1V25	97896	182	
F377-1V25	97896	202	11
F377-1V25	97896	202	8
F377-1V25	97896	202	8A
F377-1V25	97896	202	8B
F377-1V25	97896	202	8C
F377-1V25	97896	202	19
F377-1V26	97896	202	8
F377-1V27	97896	202	8B
F377-1V28	97896	202	8C
F377-1V29	97896	202	4
F377-1V3	97896	182	
F377-1V30	97896	182	
F377-1V31	97896	182	
F377-1V32	97896	202	5
F377-1V4	97896	202	6
F377-1V5	97896	202	7
F377-1V6	97896	202	9
F377-1V9	97896	202	
F377-35-15	97896	202	
F377-52-1	72962	BULK	
F42ND22-080	89513	262	26
F57A88		KITS	
F57A88	03914	34	
F612	00624	KITS	
F68256-6	97484	18	
F910B			

REFERENCE NUMBER	MFG CODE	FIG NUMBER	ITEM NUMBER
F9108	97484	95	151A
F9115	97484	95	177
F92-1660-40	72962	176	24
F92-1660-40	72962	177	23
F92-1660-40	72962	182	
F92-1660-40	72962	184	15
F9218	97484	108	6
F9333	97484	139	53A
F965	97484	18	
F965	97484	81	12
F965	97484	95	152
F983B	97484	81	11
F994B	97484	76	7
F995	97484	76	5
GA2177	86329	82	28
GA3-175	72794	183	11
GA3-200	72794	34	64A
GA3420		KITS	
GA3421	86329	82	30
GA3867	86329	82	31
GA5-312	72794	18	
GA5444	86329	82	13
GA5444	86329	82	34
GA5463	86329	78	2
GA5463	86329	82	2
GA5486	86329	78	47
GA5487	86329	78	42A
GA5488	86329	78	43
GA5489	86329	78	5A
GA5490	86329	78	25A
GA5491	86329	78	26
GA5492	86329	78	9A
GA5493	86329	78	11
GA5494	86329	78	10
GA5495	86329	78	15A
GA5495	86329	78	20A
GA5496	86329	78	17
GA5496	86329	78	22
GA5497	86329	78	16
GA5497	86329	78	21
GA5498	86329	78	28A
GA5499	86329	78	30
GA5500	86329	78	29
GA5501	86329	78	33A
GA5501	86329	78	38A
GA5502	86329	78	35
GA5502	86329	78	40
GA5503	86329	78	34
GA5503	86329	78	39
GA5506	86329	78	25
GA5625	86329	82	4
GA5626	86329	82	5
GA5627	86329	82	9
GA5628	86329	82	11
GA5629	86329	82	7
GA5630	86329	82	6
GA5889	86329	78	6
GA6128	86329	82	17
GA6129	86329	82	18A
GA6130	86329	82	19
GA6131	86329	82	20
GA6132	86329	82	2A
GA6144	86329	82	12
GA6155	86329	78	47
GA6156	86329	78	42A
GA6157	86329	78	
GA6158	86329	78	25A
GA6159	86329	78	26
GA6160	86329	78	9A
GA6161	86329	78	11
GA6162	86329	78	10
GA6163	86329	78	15A
GA6163	86329	78	20A
GA6164	86329	78	17
GA6164	86329	78	22
GA6165	86329	78	16
GA6165	86329	78	21
GA6166	86329	78	28A
GA6167	86329	78	30
GA6168	86329	78	29
GA6169	86329	78	33A
GA6169	86329	78	38A
GA6170	86329	78	35
GA6170	86329	78	40
GA6171	86329	78	34
GA6171	86329	78	39
GA6243	86329	82	
GA6243	86329	KITS	
GA6244	77272	82	
GA6244	86329	KITS	
GA6610	86329	78	50
GB1212	60380	26	6
GB1212X0H	60380	26	6
GB2121	86329	78	8
GB2122	86329	78	15
GB2123	86329	78	20
GB2124	86329	78	28
GB2125	86329	78	33
GB2126	86329	78	38
GB2127	86329	78	5
GB2342	86329	78	4
GB2496	86329	82	33
GB2497	86329	82	32
GB2509	86329	78	8
GB2510	86329	78	15
GB2511	86329	78	20
GB2512	86329	78	28
GB2513	86329	78	33
GB2514	86329	78	38
GB78	78784	26	3
GB78X0H	60380	26	3
GB86	60380	265	87
GB86	60380	268	16
GC1367	86329	78	7
GC1368	86329	78	14
GC1369	86329	78	19
GC1370	86329	78	24
GC1371	86329	78	27
GC1372	86329	78	32
GC1373	86329	78	37
GC1374	86329	78	42
GC1639	86329	78	7
GC1640	86329	78	14
GC1641	86329	78	19
GC1642	86329	78	24
GC1643	86329	78	27
GC1644	86329	78	32
GC1645	86329	78	37
GC1646	86329	78	42
GD312	86329	78	49
GD313	86329	78	46A
GD387	86329	82	36
GD388	86329	78	49
GD391	86329	82	14
GD392	86329	78	46A
GLYPTAL1201-1PT	89954	MSUP	
GMH8121	78784	26	20
GS100E255	00502	137	36
GS100E255	00502	137	43
GT1-8PAC	20060	BULK	
GYN146	73842	50	4
G1032	04714	40	

REFERENCE NUMBER	MFG CODE	FIG NUMBER	ITEM NUMBER
G322A2TON	75535	263	3
G51HA1275	03296	200	
G51HB1275	03296	200	
G59187	73949	226	46
G59187-1	73949	226	45
G6528	72914	190	151
G718754	78385	97	11C
G718755	78385	97	17A
G718756	78385	98	7
G718757	78385	99	5
G719372	78385	97	23
G719373	78385	98	13
G719374	78358	99	12
G94A37	89513	261	10
HD16-1	73949	205	5
HD52-1	73949	225	30
HFX4FGMILG3278	28037	15	32
HFX4FGMILG3278	28037	16	29
HHP96TYICLA-010-36-36	81348	BULK	
HJ486024	60380	49	15
HMX8G	71334	F10	
HN4	79934	50	17
HPC144116	84685	124	
HPC144116	84685	133	
HPC144117	84685	124	
HPC144117	84685	133	
HPC144119	84685	124	
HPC144119	84685	133	44
HPC144125	84685	133	45
HPC144500	84685	133	43
HPC144504	84685	133	
HPS40-3		KITS	
HPS40-4		KITS	
HPS40-4	84685	124	29
HPS40-5		KITS	
HPS40-6		KITS	
HPS40-6	84685	124	45
HP296111	84685	133	16
HP296111	84685	133	36
HP296111	84685	133	64
HP380109	84685	124	64
HP397113	84685	124	8
HP397500	84685	124	12
HP397500	84685	133	42
HP399117	84685	124	13
HP411113		125	10
HP411113		KITS	
HP411116		125	35
HP411116		KITS	
HP466166	84685	124	
HP466167	84685	124	
HP466168	84685	124	
HP466505	84685	124	16
HP466506	84685	124	14
HP466507	84685	124	
HP495105	84685	133	
HP495107	84685	133	21
HP495108	84685	133	26
HP495109	84685	133	27
HP495501	84685	133	28
HP495502	84685	133	
HP502109	84685	133	60
HP559101	84685	133	56
HP559103	84685	133	55
HP559501	84685	133	
HP573119	84685	124	
HP573120	84685	124	
HP573121	84685	124	
HP573121	84685	133	
HP573502	84685	124	9
HP5900TF2	84685	F25	3
HP600-7-6	81872	207	6
HP600-7-6	81872	208	2
HP610101M	84685	133	74
HP610103	84685	133	15
HP610104	84685	133	17
HP610105	84685	133	71
HP610106	84685	133	14
HP610107	84685	133	11
HP610108	84685	133	37
HP610109	84685	133	
HP610110	84685	133	63
HP610111	84685	133	66
HP610112	84685	133	67
HP610113	84685	133	19
HP610119	84685	133	
HP610120	84685	133	35
HP610121	84685	133	
HP610123	84685	133	47
HP610127	84685	133	3
HP610501	84685	133	
HP610504	84685	133	38
HP610505	84685	133	50
HP610506	84685	133	
HP610901	84685	133	68
HP610902	84685	133	69
HP653500	84685	124	74
HP712102	84685	125	25
HP712103	84685	125	12
HP712104	84685	125	17
HP712106	84685	125	28
HP712107	84685	125	23
HP712108	84685	125	19
HP712110	84685	125	37
HP712111	84685	125	32
HP712112	84685	125	8
HP712115		125	49
HP712115		KITS	
HP712116	84685	125	48
HP712117	84685	125	36
HP712118	84685	125	26
HP7124	84685	125	
HP7124	84685	KITS	
HP731106	84685	125	41
HP731112		125	44
HP731112		KITS	
HP772102	84685	124	46
HP772103	84685	124	44
HP772106	84685	124	42
HP772107	84685	124	43
HP810100-3	84685	117	70
HP810100-3	84685	129	151
HP810100-3	84685	133	
HP810108	84685	133	34
HP817101	84685	124	77
HP817101BM	84685	124	
HP817102	84685	124	
HP817103	84685	124	
HP817104	84685	124	31
HP817105	84685	124	55
HP817105		KITS	
HP817106	84685	124	30
HP817106		KITS	
HP817107	84685	124	26
HP817107	84685	124	49
HP817108	84685	124	71
HP817109	84685	124	6
HP817112	84685	124	32A
HP817113	84685	124	19
HP817114	84685	124	22
HP817116	84685	124	38
HP817117	84685	124	36

REFERENCE NUMBER	MFG CODE	FIG NUMBER	ITEM NUMBER
HP817118	84685	124	32B
HP817120	84685	124	70
HP817121	84685	124	68
HP817122	84685	124	61
HP817123	84685	124	56
HP817124	84685	124	59
HP817124		KITS	
HP817201-1	84685	124	78
HP817201-2	84685	124	
HP817500	84685	124	52
HP817501	84685	124	32
HP8176	84685	124	
HP8176	84685	KITS	
HSP779R0041	27914	BULK	
HS15-0-5MA	38315	189	13
HS51400	61864	36	
HS609	90052	F17	33
HS618	90052	F17	37
HYSOL3478	04347	BULK	
HYSOL3478	04347	MSUP	
HYSOL4297	04347	MSUP	
HZA004-001	93190	BULK	
H08C92	89513	251	44
H120P1-025-224	83014	18	125
H120P1-032-071	83014	18	131
H120P1-032-224	83014	18	10
H120P1-040-080	83014	18	141
H120P1-040-224	83014	18	136
H120P1-040-224	83014	18	3
H120P1-040-250	83014	18	157
H120P1-063-071	83014	32	
H13	80226	192	46
H134K474	83014	31	26
H134P1-156-531	83014	10	23
H2-3404	04347	MSUP	
H22-3	75237	BULK	
H312-1	83014	33	7
H312-2	83014	33	8
H313-1	83014	33	6
H313-2	83014	33	5
H334-17	83014	18	
H334-17	83014	18	100
H334-17	83014	18	94
H334-17	83014	18	96
H334-17	83014	32	11
H339-1	83014	28	4
H339-1	83014	28	8A
H346-1	83014	18	54
H353-1	83014	18	
H353-1	83014	18	21
H42L04	15653	204A	11
H42L04	15653	204A	7
H42L06	75237	204A	21
H4600-072-072	83014	40	
H5000-2-032-064	83014	33	32
H5200-096-207		32	67
H5200K950		32	67
H5200K950	83014	31	8
H560-1AE	83014	32	67
H560-1BD	83014	32	37A
H8L3538	04347	MSUP	
H882-1	83014	18	
H9190S	83014	31	12
H976-1	83014	62	7F
ID453ARN30	80058	157	28
IF11-0200-1	93712	A20	3
IN1124A	81349	193	61
IN14	00781	157	28
IN14-1		157	28
IN2814A	82260	182A	44
IN2984B	81483	184	35
IN538	09213	184	38
IS14980-1	75511	262A	9
IS14980-1	75511	262B	
JAIL040S103UA	01121	204A	5
JANIN4153	81349	189A	88
JAN1N1202A	81349	192	22
JAN1N2432	81349	189A	93
JAN1N3023B	81349	189	35
JAN1N3023B	81349	189A	45
JAN1N3611	81349	192	40
JAN1N4153	81349	189A	43
JAN1N645	81349	189	33
JAN1N645	81349	204A	34
JAN1N751A	81349	194	198
JAN2N1132	81349	189A	104
JAN2N1132	81349	189A	80
JAN2N1893	81349	189A	42
JAN2N2219A	81349	176	328
JAN2N2432	81349	189A	81
JAN2N2432	81349	204A	102
JAN2N2907A	81349	204A	104
JAN2N2907A	81349	204A	161
JAN2N930	81349	189	28
JE1	91929	265	231
JE1	91929	265	24
JE1	91929	268	139A
JE1	91929	268	156
JE1	91929	268	64
JJ2A	35344	204A	124
JN17-33718	56289	277	
JS1G048F151UA	01121	187	38
JS1G048F151UA	01121	187	44
JS1G048F151UA	01121	187	50
JT06RE16-26SSR	77820	BULK	
JV10070	91929	183	41
JV9	91929	167	20
JV9	91929	205	29
JYLC129	05624	232	45
JYLC89	05624	232	44
JYRD33	05624	67A	40
J1032	04714	40	
J11643-1	76005	10	
J11643-1	76005	11A	
J11643-1	76005	11A	58A
J11643-1	76005	11A	75A
J11643-2	76005	10	
J14028-1	76005	13	20
J14028-1	76005	13	45
J14028-1	76005	13	71
J200A7	99657	167	17
J3-168-2	19557	188	44
J3-168-2	19557	196	9
J30C13	89513	262	57
J30C13		KITS	
J9104-5	76005	92	17
J9104-5	76005	92	75
KB210-6-2	75237	BULK	
KB210-8-8	75237	BULK	
KB211-6-18	15653	BULK	
KB211-6-6	15653	BULK	
KB211-6-8	15653	BULK	
KB8-1	73949	205	38
KCCL0256	98004	184	
KEX6336		53	39
KEX6336		54	29
KEX6336		KITS	
KEX6340		51	46
KEX6340		KITS	
KNHS428S11	98004	BULK	
KNL624M7SX	98004	49	218

REFERENCE NUMBER	MFG CODE	FIG NUMBER	ITEM NUMBER
KNS428F10	29372	265	299
KNS428F10	29372	268	30A
KP218S	21335	239	180
KP49B	38443	265	300
KR075N35DNS	05397	189A	54
KR016N35DNS	05397	189A	113
KR016N35DNS	05397	189A	57
KR10-15P	99057	24	
KR11N35DNS	81349	189	31
KR11N35DNS	05397	189A	72
KR4AS1	99057	87	25
KR4AS1	99057	76	32
KR4AS1	99057	76	49
KR4AS1	99057	80	19
KR4AS1	99057	81	198
KR4AS1	99057	83	134
KR4AS1	99057	83	177
KR4AS1	99057	83	359
KR4AS1	99057	88	97A
KR4A1	99057	81	119
KR5-1	99057	71	14
KR5-1	99057	71	278
KR5-15		KITS	
KR5-15	99057	82	35
KR5AS1	99057	76	140
KR5AS1	99057	76	31
KR5AS1	99057	76	58
KR5AS1	99057	80	18
KR5AS1	99057	80	7
KR5AS1	99057	81	195
KR5AS1	99057	81	196
KR5AS1	99057	81	197
KR5AS1	99057	81	64
KR5AS1	99057	81	80
KR5AS1	99057	83	100
KR5AS1	99057	83	101
KR5AS1	99057	83	139
KR5AS1	99057	83	174
KR5AS1	99057	83	175
KR5AS1	99057	83	176
KR5AS1	99057	83	207
KR5AS1	99057	83	305
KR5AS1	99057	83	358
KR5AS1	99057	83	99
KR5AS1	99057	88	100A
KR5AS1	99057	88	32A
KR5AS1	99057	88	61
KR5AS1	99057	88	89A
KR5AS1	99057	88	93A
KR5A1	99057	81	121
KR5A1	99057	91	12
KR5S15	99057	83	
KR5S15	99057	83	134
KR5S15	99057	83	177
KR5S15	99057	87	
KR6-1	99057	11	133C
KR6-1	99057	F19	13
KR6AS1	99057	87	27
KR6AS1	99057	76	31A
KR6AS1	99057	76	50
KR6AS1	99057	80	17
KR6AS1	99057	80	6
KR6AS1	99057	83	208
KR6AS1	99057	83	351
KR6AS1	99057	83	354
KR6AS1	99057	83	357
KR6AS1	99057	83	361
KR6AS1	99057	83	98
KR6AS1	99057	92	28A
KR6AS1	99057	92	82A
KR6A15	99057	71	16

REFERENCE NUMBER	MFG CODE	FIG NUMBER	ITEM NUMBER
KR6S1	99057	81	59
KR6S1	99057	83	256
KR6S1	99057	83	257
KR7-1	99057	11C	138
KR7-1	99057	BULK	
KR7AS1	99057	87	30
KR7AS1	99057	81	199
KR7AS1	99057	83	355
KR7A1	99057	78	44
KR7A15	99057	BULK	
KR7S1	99057	76	140
KR7S1	99057	83	97
KR7S1	99057	87	3A
KR75N20KNS	05397	189A	114
KR8-1	99057	81	121A
KR8S15	99057	83	
KR8S15	99057	87	
KSBG6N3	97613	45	
KSBN12-15		KITS	
KSBN12-15	97613	54	2
KS4	21335	42B	54
KS4A	21335	224	27
KS4A	21335	226	10
KS89-12	91836	BULK	
KS89-17	91836	BULK	
KS89-31	91836	BULK	
KS89-36	91836	BULK	
KS89-41	91836	BULK	
KWB12N1		KITS	
KWB12N1	97613	44	20
KWB12N1	97613	53	3
KWB12N4	97613	45	
KWB12N4	97613	54	9
KWB20-1N		KITS	
KWB201N	97613	53	44
K1R1N125KNS	05397	189A	91
K1R1N20KNS	05397	189	25
K1R1N20KNS	05397	189A	77
K11N15KNS	05397	189A	101
K11N15KNS	05397	189A	68
K112-000457	08080	64	10
K12832-2	88379	126	
K12832-2	88379	128	
K12832-2	88379	KITS	
K12852-2	88379	126	
K12852-2	88379	128	
K12852-2	88379	KITS	
K202-000476	08080	64	3
K203-000420	08080	152	9
K203-000420	08080	156	9
K205-000394	08080	64	5
K206-000460	08080	64	14
K206-000653	08080	156	13
K207M12	08080	64	12
K207M12	08080	64	16
K207M32	08080	64	4
K208-000418	08080	152	10
K208-000418	08080	156	10
K208-000461	08080	64	11
K208-000462	08080	64	15
K211-000463	08080	152	
K211-000463	08080	156	5
K212-000454	08080	64	6
K3R4N35KNS	81349	189A	65
K309-000418	08080	64	9
K309-000442	08080	156	1
K310-000501	08080	156	15
K36A47	89513	261	27
K401-000399	08080	64	18
K414-000465	08080	64	2
K6N20KNS	05397	189A	48

REFERENCE NUMBER	MFG CODE	FIG NUMBER	ITEM NUMBER	REFERENCE NUMBER	MFG CODE	FIG NUMBER	ITEM NUMBER
K62601	08080	152	13	L44000-17	17564	60	24
K62602	08080	152	12	L44000-2	17564	60	30
K62602	08080	156	12	L44000-3-24B	17564	60	38
K62603	08080	152	5	L44000-3-24S	17564	61	40
K62603	08080	156	6	L44000-4	17564	61	32
K62606	08080	152	6	MARKSALOTBLACK	71328	MSUP	
K62606	08080	156	7	MA1	81349	157	57
K62608	08080	152	2	MA1	81349	158	52
K795FS8B	18965	135	10	MBC61485-300M	98625	117	10A
LAB252SB1-4	83835	16	49	MBC61485-300M	98625	119	
LAB252SB1-4	83835	19	8	MBH0-204SS	19315	165	68
LAB252SB1-4	83835	21		MBH0-204SS	19315	165	71
LAB252SB1-4	83835	28	32	MB5317S75N430	98625	118	
LAB252SB1-8	83835	21		MB5319S75N450V	98625	118	
LAB600-1B1S2	83835	34		MB9352351	37362	F22	
LCC6	29666	BULK		MB9353361	37362	F22	
LC016B13SS	84830	72	100	MCS1912-903	51600	134	61
LC016B13SS	84830	74	11	MC233FH097	01414	141	6
LC65-326R	31435	193	18	MC233PH089	01414	141	3
LHTM40W	72962	BULK		MC233SH090	01414	140	19
LL505-4-6		KITS		MC233SH093	01414	140	20
LMK168	93712	244		MDFIL0-404SS	19315	165	3
LMK168	93712	248		MEK	86144	MSUP	
LMK168	93712	KITS		MFFIL0-203SS	19315	165	64
LMK169	93712	244		MFIL0-302SS	19315	165	17
LMK169	93712	248		MFIL0-305SS	19315	165	84
LOCQICGRQ60ZSPRAYCN	05972	MSUP		MFIL0-306SS	06840	165	20
LP25J26S5	03038	230	12	MFIL0-30712SS	19315	165	57
LP25J26S5	03038	231	15	MFIL0-308SS	19315	165	97
LP378AMIL6-100-16	81348	BULK		MFIL0-403SS	19315	165	13
LP410A125X36	81348	BULK		MFIL0-405SS	19315	165	10
LP565D4H2	03038	183	24	MFIL0-405SS	19315	165	26
LP565D4H2	03038	183	48	MF004B007A	62983	265	6
LT3178	35351	A54		MF004B007A	62983	267	
LT3292	35351	F23		MF004B007A	62983	268	5A
LW1023-1-8	83014	45		MF36-3909-30Z2	62983	22	40
L1Q1150BP4-4	36536	186	11	MF36-3909-30Z2	62983	154	
L1Q1150BP4-4	36536	186	15	MF6000-08	75237	BULK	
L1Q1150BP4-4	36536	186	4	MF6001-3	75237	70	
L1347-1-6	99057	11C	13C	MF77-3906-20S565-4	62983	265	6
L135-1-5	99057	71	15	MF77-3906-20S565-4	62983	266	
L135-1-5	99057	71	27C	MF77-3906-20S565-4	62983	268	5A
L247-1-7	99057	83	97	MF77-3906-20S565-4A	62983	265	6
L247-1-7	99057	87	4	MF77-3906-20S565-4A	62983	266	
L258-1-6	99057	81	121B	MF77-3906-20S565-4A	62983	268	5A
L258-1-7	99057	BULK		MILC17TYPER3223U	81349	BULK	
L2710-6-9	99057	24		MILH27267-10	81349	KITS	
L33000-3	17564	43		MILH27267-12	81349	KITS	
L33000-5	17564	44		MILH27267-16Z	81349	KITS	
L369-1-8	99057	11	36D	MILH27267-4	81349	KITS	
L44000-11	17564	43	16	MILH27267-6	81349	KITS	
L44000-11	17564	60		MILH27267-8	81349	KITS	
L44000-11-10	17564	60	33	MILI7444SIZE8	81349	162	42
L44000-11-10	17564	61	35	MILR26RW20V150	81349	200	15
L44000-11-3	17564	60	26	MILR26RW24V150	81349	207	34
L44000-11-4	17564	60	29	MILR26R20V240	81349	200	16
L44000-11-4	17564	61	31	MILT26780	81349	F3	
L44000-11-5	17564	60	19	MLSPEU6-3	29666	BULK	
L44000-11-6	17564	60	15	MLSPM4-1	29666	BULK	
L44000-11-7	17564	60	7	MLSPM4-2	29666	BULK	
L44000-11-8	17564	60	4	MLSPM4-3	29666	BULK	
L44000-13	17564	45	33	MLSPM4-4	29666	BULK	
L44000-13	17564	61		MLSPM4-5	29666	BULK	
L44000-13-2	17564	61	27	MLSPM5-2	29666	BULK	
L44000-13-3	17564	61	28	MLSPM5-3	29666	BULK	
L44000-13-4	17564	61	22	MLSPM5-4	29666	BULK	
L44000-13-5	17564	61	25	MLSPM5-5	29666	BULK	
L44000-13-6	17564	61	8	MLSPM5-6	29666	BULK	
L44000-13-7	17564	61	12	MNOIOSS	19315	165	6
L44000-13-8	17564	60	37	MP1505	76374	198	18
L44000-13-8	17564	61	38	MP1505	76374	199	35

REFERENCE NUMBER	MFG CODE	FIG NUMBER	ITEM NUMBER
MP1505	76374	209	11
MP931B	76374	198	
MP931B	76374	198	4
MP931B	76374	198	5
MP931B	76374	209	10
MP934B	76374	198	6
MRA34PJ6	81312	BULK	
MRA34S-JTC6H	81312	BULK	
MRA41SG7	81312	BULK	
MRC204SZ	38443	94	14
MRC205SE	81965	94	13
MRE9SGVL	81312	BULK	
MR4	77896	222	
MR4	77896	228	
MR4	77896	237	25
MR4	77896	237	53
MR5	77896	239	
MSS5310-29	96906	67A	26
MSU7826-6	96906	239	39
MS1042-3	96906	182	
MS115-00609-0100	96906	247	13
MS115-00609-0100	96906	265	84
MS115-00609-0100	96906	268	27
MS122078	96906	64A	72
MS122116	96906	128	45
MS122196	96906	128	43
MS124695		KITS	
MS124695	96906	214	21
MS124695	96906	216	20
MS124696		KITS	
MS124696	96906	125	
MS124736	96906	67	36
MS134351		132	16
MS134351		KITS	
MS134352		KITS	
MS134352	96906	225	12
MS134353		KITS	
MS134353	96906	272	29
MS134354		KITS	
MS134354	96906	64A	9
MS134355	96906	215	9
MS134356	96906	124	60
MS134356	96906	64A	42
MS134378		KITS	
MS134378	96906	79	39
MS134378	96906	96	22
MS134378	96906	122	44
MS134378	96906	125	47
MS134378	96906	130	29
MS15001-1		KITS	
MS15001-1	96906	51	15
MS15001-1	96906	59	46
MS15001-1	96906	92	27
MS15001-1	96906	92	81
MS15001-1	96906	118	76
MS15001-3	96906	49	66
MS15001-3	96906	BULK	
MS15002-1	96906	93	28
MS150452	96906	73	59I
MS150453		KITS	
MS150453	96906	74	45
MS150454	96906	73	39N
MS150454	96906	73	61I
MS150459	96906	133	
MS15795-704		KITS	
MS15795-704	96906	17	
MS15795-704	96906	33	34F
MS15795-704	96906	36	26
MS15795-704	96906	42	
MS15795-704	96906	45	31B
MS15795-704	96906	62	
MS15795-704	96906	157	86
MS15795-704	96906	182	
MS15795-704	96906	183	16
MS15795-704	96906	188	
MS15795-704	96906	188	10
MS15795-704	96906	196	21B
MS15795-704	96906	196	7B
MS15795-704	96906	204	
MS15795-704	96906	231	23
MS15795-704	96906	265	154
MS15795-704	96906	265	173
MS15795-704	96906	265	175
MS15795-704	96906	265	233
MS15795-704	96906	265	75
MS15795-704	96906	268	134A
MS15795-704	96906	268	149D
MS15795-704	96906	268	45
MS15795-704	96906	277	
MS15795-803	96906	137	10
MS15795-803	96906	183A	81B
MS15795-804	96906	18	
MS15795-804	96906	64	8
MS15795-804	96906	268	195C
MS15795-805	96906	221A	7
MS15795-813	96906	BULK	
MS15795-904	96906	100	24
MS15975-801	96906	183A	62
MS15984-8-8		KITS	
MS16535-12	96906	165	74
MS16535-76	96906	193	4
MS16555-20		KITS	
MS16555-622	96906	73	28C
MS16555-624	96906	126	4
MS16555-624	96906	128	17
MS16555-626	96906	148	31
MS16555-630	96906	49	26C
MS16555-630	96906	BULK	
MS16555-642	96906	270	60
MS16562-1	96906	203	2
MS16562-1	96906	230	22
MS16562-1	96906	231	49
MS16562-189	96906	74	66
MS16562-190		KITS	
MS16562-190	96906	52	9
MS16562-190	96906	105	10
MS16562-191	96906	102	7A
MS16562-191	96906	103	8
MS16562-192	96906	184	23C
MS16562-192	96906	247	19
MS16562-192	96906	248	101
MS16562-194	96906	13	2A
MS16562-194	96906	102	15
MS16562-194	96906	103	17
MS16562-194	96906	230	33
MS16562-194	96906	231	79
MS16562-205	96906	102	14
MS16562-205	96906	103	16
MS16562-211	96906	102	39
MS16562-211	96906	103	32
MS16562-218	96906	226	47
MS16562-219	96906	BULK	
MS16562-234	96906	BULK	
MS16562-236	96906	71	64
MS16562-237	96906	36A	
MS16562-28	96906	BULK	
MS16562-3	96906	128	44
MS16562-3	96906	230	40
MS16562-31	96906	20	61
MS16562-31	96906	59	28
MS16562-36	96906	17	25
MS16562-38	96906	BULK	

REFERENCE NUMBER	MFG CODE	FIG NUMBER	ITEM NUMBER
MS16562-4	96906	BULK	
MS16562-43	96906	BULK	
MS16562-44	96906	BULK	
MS16562-52	96906	34	
MS16562-6	96906	203	35
MS16624-1018	96906	248	94
MS16624-1025	96906	BULK	
MS16624-1027	96906	183	25
MS16624-1027	96906	233	29
MS16624-1031	96906	16	1
MS16624-1031	96906	145	6
MS16624-1035	96906	BULK	
MS16624-1037	96906	145	3
MS16624-1075	96906	263	24A
MS16624-1087	96906	223	63
MS16624-1093	96906	BULK	
MS16624-1106	96906	BULK	
MS16624-162	96906	26	
MS16624-19	96906	BULK	
MS16624-3027	96906	83	35K
MS16625-102	96906	26	13
MS16625-1037	96906	216	17
MS16625-1045	96906	267	7
MS16625-1056	96906	192	92
MS16625-1068	96906	216	64
MS16625-1075	96906	72	95
MS16625-1082	96906	74	6
MS16625-1102	96906	BULK	
MS16625-1112	96906	BULK	
MS16625-1125	96906	BULK	
MS16625-1137	96906	59	29
MS16625-187	96906	266	14
MS16625-4043	96906	128	8
MS16625-4050	96906	192	119
MS16625-4050	96906	233	
MS16625-4068	96906	BULK	
MS16625-4100	96906	BULK	
MS16625-4118	96906	42B	78
MS16625-4137	96906	108	2
MS16626-75	96906	26	14
MS16626-75	96906	26	21
MS16627-75	96906	63	34
MS16627-75	96906	138	8
MS16627-87	96906	274	7
MS16628-4025	96906	248	47
MS16629-4087	96906	247	12
MS16629-4100	96906	128	3
MS16629-4102	96906	247	23
MS16631-150		KITS	
MS16632-4037	96906	96	15
MS16632-87		KITS	
MS16632-87	96906	78	13
MS16632-87	96906	78	9
MS16632-87	96906	82	18
MS16632-87	96906	82	22
MS16633-1066	96906	160	10
MS16633-12	96906	BULK	
MS16633-4018	96906	128	7
MS16698-18	96906	BULK	
MS16698-50	96906	BULK	
MS16837-100	96906	BULK	
MS16837-112	96906	BULK	
MS16837-261	96906	BULK	
MS16837-387	96906	BULK	
MS16837-406	96906	BULK	
MS16997-151	96906	BULK	
MS16997-32	96906	267	
MS16997-43	96906	154	1
MS16997-60	96906	BULK	
MS16998-26	96906	149	5
MS16998-26	96906	274	53
MS16998-28	96906	267	15
MS16998-29	96906	149	2
MS16998-29	96906	274	3
MS16998-32	96906	76	169A
MS16998-41	96906	BULK	
MS16998-42	96906	F18	34
MS16998-44	96906	F18	24
MS16998-44	96906	149	18
MS16998-44	96906	274	29
MS16998-45	96906	138	14
MS16998-45	96906	138	22
MS17131-60		59	44
MS17131-7	96906	148	17A
MS171433	96906	197	
MS171436		KITS	
MS171438		KITS	
MS171438	96906	231	37
MS171471		KITS	
MS171471	96906	216	56
MS171496	96906	263	19
MS171522	96906	60	
MS17160-123	96906	BULK	
MS172207	96906	BULK	
MS17245-5	96906	188	26
MS17413-032		KITS	
MS17732-4	96906	284	20
MS17732-4	96906	285	20
MS17732-6	96906	284	35
MS17821-1-0	96906	BULK	
MS17821-1-9	96906	222	156
MS17821-1-9	96906	222	43
MS17821-1-9	96906	244	30B
MS17821-1-9	96906	BULK	
MS17821-9	96906	KITS	
MS17825-10	96906	244	59
MS17825-10	96906	244	70
MS17825-10	96906	244	82
MS17825-10	96906	244	87
MS17825-10	96906	244	93
MS17825-10	96906	244	98
MS17825-3	96906	62	9
MS17825-3	96906	66	28
MS17825-3	96906	228	27
MS17825-3	96906	KITS	
MS17825-4	96906	76	118A
MS17825-4	96906	81	166
MS17825-4	96906	222	2
MS17825-4	96906	222	33
MS17825-4	96906	223	39
MS17825-4	96906	223	76
MS17825-4	96906	226	13
MS17825-4	96906	226	3
MS17825-4	96906	228	119
MS17825-4	96906	228	12
MS17825-4	96906	228	127B
MS17825-4	96906	228	159
MS17825-4	96906	228	174
MS17825-4	96906	228	185
MS17825-4	96906	228	34
MS17825-4	96906	228	4
MS17825-4	96906	228	48
MS17825-4	96906	228	65
MS17825-4	96906	228	67
MS17825-4	96906	228	72
MS17825-4	96906	228	96
MS17825-4	96906	229	32
MS17825-4	96906	229	38
MS17825-4	96906	237	23
MS17825-4	96906	237	51
MS17825-4	96906	244	20
MS17825-4	96906	244	29

REFERENCE NUMBER	MFG CODE	FIG NUMBER	ITEM NUMBER
MS17825-4	96906	245	18A
MS17825-4	96906	246	4
MS17825-4	96906	KITS	
MS17825-6	96906	222	175
MS17825-6	96906	222	93
MS17825-6	96906	244	65
MS17825-6	96906	KITS	
MS17825-7	96906	222	45
MS17825-7	96906	244	38
MS17825-7	96906	KITS	
MS17825-8	96906	222	161
MS17825-8	96906	222	191
MS17825-8	96906	222	202
MS17825-8	96906	222	56
MS17825-8	96906	222	72
MS17825-8	96906	222	85
MS17825-8	96906	244	50
MS17825-8	96906	244	54
MS17825-8	96906	244	65
MS17825-8	96906	244	82
MS17825-8	96906	244	93
MS17825-8	96906	KITS	
MS17826-3	96906	228	56
MS17826-3	96906	245	2
MS17826-3	96906	245	21B
MS17826-3	96906	246	8
MS17826-4	96906	102	7D
MS17826-4	96906	103	6B
MS17826-4	96906	222	137
MS17826-4	96906	222	144
MS17826-4	96906	222	33
MS17826-4	96906	222	34
MS17826-4	96906	235	4
MS17826-4	96906	235	7
MS17826-4	96906	237	20
MS17826-4	96906	237	48
MS17826-4	96906	239	115
MS17826-4	96906	239	129
MS17826-4	96906	239	95
MS17826-4	96906	240	18
MS17826-4	96906	240	26
MS17826-4	96906	242	7
MS17826-4	96906	244	19
MS17826-4	96906	244	20
MS17826-4	96906	244	28
MS17826-4	96906	244	29
MS17826-4	96906	BULK	
MS17826-4	96906	KITS	
MS17826-5	96906	222	110
MS17826-5	96906	222	35
MS17826-5	96906	237	3
MS17826-5	96906	237	31
MS17826-5	96906	239	15
MS17826-5	96906	239	151
MS17826-5	96906	239	9
MS17826-5	96906	242	4
MS17826-5	96906	244	11
MS17826-5	96906	244	4
MS17826-5	96906	KITS	
MS17826-6	96906	239	2
MS17826-6	96906	239	73
MS17826-6	96906	239	84
MS17826-6	96906	240	37
MS17826-6	96906	240	48
MS17826-6	96906	240	9
MS17826-6	96906	244	102
MS17826-6	96906	244	113
MS17826-6	96906	244	134
MS17826-6	96906	KITS	
MS17826-7	96906	236	16
MS17826-7	96906	236	3
MS17826-7	96906	244	123
MS17826-8	96906	222	113
MS17826-8	96906	222	125
MS17826-8	96906	237	37
MS17826-8	96906	237	9
MS17826-8	96906	238	39
MS17826-8	96906	239	102
MS17826-8	96906	239	164
MS17826-8	96906	KITS	
MS17845-1	96906	204	
MS17983-2	96906	188	57
MS17984C306	96906	33	17
MS17984C614	96906	45	
MS17985C819	96906	263	15
MS179856811	96906	BULK	
MS17987C306	96906	BULK	
MS17987C430	96906	BULK	
MS17990C418	96906	284	24
MS17990C418	96906	285	24
MS18001-20-9	96906	BULK	
MS18029-1S10	96906	191	
MS18029-1S10	96906	195	
MS18029-1S10	96906	275	
MS18029-1S14	96906	158	63
MS18029-1S5	96906	196	20
MS18029-1S7	96906	157	82
MS18029-1S8	96906	195	
MS18029-11S20	96906	158	64
MS18029-11S20	96906	275	
MS18029-11S20	96906	277	
MS18029-11S20	96906	BULK	
MS18029-12S16	96906	BULK	
MS18029-2S8	96906	188	
MS18029-21	96906	158	65
MS18029-21	96906	BULK	
MS18029-22	96906	BULK	
MS18029-24	96906	BULK	
MS18121-415	96906	BULK	
MS18209-387	96906	201	49
MS19059-2	96906	230	86
MS19059-57	96906	20	
MS19060-1	96906	64	13
MS19060-16	96906	146	20
MS19060-19	96906	125	9
MS19060-20	96906	126	7
MS19060-20	96906	128	20
MS19060-20	96906	272	19
MS19060-24	96906	134	25
MS19070-063	96906	248	68
MS19081-1	96906	60	39
MS19081-1	96906	61	41
MS2J226-2-20	96906	BULK	
MS20001PH10-7200	96906	BULK	
MS20001PH4-7200	96906	BULK	
MS20001PH5-7200	96906	BULK	
MS20001PH6-7200	96906	BULK	
MS20001PH9-7200	96906	BULK	
MS20001PX12-7200	96906	BULK	
MS20001PX14-7200	96906	BULK	
MS20001PY12-7200	96906	BULK	
MS20001PY4-7200	96906	BULK	
MS20001P12-7200	96906	BULK	
MS20001P4-7200	96906	BULK	
MS20001P5-7200	96906	BULK	
MS20001P6-7200	96906	BULK	
MS20002-10	96906	BULK	
MS20002-12	96906	11	77
MS20002-12	96906	72	39
MS20002-12	96906	72	71
MS20002-12	96906	118	
MS20002-14	96906	91	2

REFERENCE NUMBER	MFG CODE	FIG NUMBER	ITEM NUMBER
MS20002-14	96906	F14	6
MS20002-14	96906	F16	25
MS20002-14	96906	KITS	
MS20002-16	96906	43	4
MS20002-18	96906	43	3
MS20002-4	96906	81	166A
MS20002-4	96906	118	6
MS20002-5	96906	11	15
MS20002-5	96906	18	
MS20002-5	96906	81	143A
MS20002-5	96906	83	278
MS20002-5	96906	83	285
MS20002-5	96906	118	97
MS20002-5	96906	KITS	
MS20002-6	96906	11	25
MS20002-6	96906	50	5
MS20002-6	96906	75	16
MS20002-6	96906	75	65
MS20002-6	96906	76	165
MS20002-6	96906	83	319
MS20002-6	96906	110	49
MS20002-7	96906	11	26
MS20002-8	96906	11	79
MS20002-8	96906	75	16
MS20002-8	96906	75	20
MS20002-8	96906	76	10
MS20002-8	96906	222	195
MS20002-8	96906	222	206
MS20002-8	96906	222	76
MS20002-8	96906	222	86
MS20002-8	96906	240	5
MS20002-8	96906	244	86
MS20002-8	96906	244	97
MS20002-8	96906	KITS	
MS20002-9	96906	45	
MS20002C10	96906	244	80
MS20002C10	96906	244	91
MS20002C10	96906	428	64
MS20002C12	96906	11	76
MS20002C12	96906	72	4
MS20002C12	96906	72	42
MS20002C12	96906	72	74
MS20002C12	96906	75	48
MS20002C12	96906	118	
MS20002C12	96906	KITS	
MS20002C14	96906	91	4
MS20002C14	96906	F14	8
MS20002C14	96906	F16	27
MS20002C14	96906	269	60
MS20002C14	96906	KITS	
MS20002C16	96906	43	7
MS20002C18	96906	43	5
MS20002C20	96906	81	4
MS20002C20	96906	83	2
MS20002C20	96906	244	74
MS20002C20	96906	KITS	
MS20002C4	96906	71	80
MS20002C4	96906	71	91
MS20002C4	96906	75	103
MS20002C4	96906	81	166C
MS20002C4	96906	118	96
MS20002C4	96906	228	105
MS20002C4	96906	287	22
MS20002C4	96906	KITS	
MS20002C5	96906	11	16
MS20002C5	96906	11	34
MS20002C5	96906	18	
MS20002C5	96906	75	97
MS20002C6	96906	11	33
MS20002C6	96906	11	56
MS20002C6	96906	50	7
MS20002C6	96906	75	164
MS20002C6	96906	75	19
MS20002C6	96906	75	56
MS20002C6	96906	75	65
MS20002C6	96906	75	68
MS20002C6	96906	76	165B
MS20002C6	96906	81	183A
MS20002C6	96906	83	317
MS20002C6	96906	110	48
MS20002C6	96906	222	173
MS20002C6	96906	222	92
MS20002C6	96906	222	96
MS20002C6	96906	244	63
MS20002C6	96906	244	68
MS20002C6	96906	KITS	
MS20002C7	96906	222	45
MS20002C7	96906	222	47
MS20002C7	96906	240	4
MS20002C7	96906	244	36
MS20002C7	96906	244	41
MS20002C8	96906	11	82
MS20002C8	96906	75	19
MS20002C8	96906	75	48
MS20002C8	96906	76	18
MS20002C8	96906	81	99A
MS20002C8	96906	83	245
MS20002C8	96906	83	248
MS20002C8	96906	83	250
MS20002C8	96906	222	159
MS20002C8	96906	222	164
MS20002C8	96906	222	178
MS20002C8	96906	222	196
MS20002C8	96906	222	207
MS20002C8	96906	222	54
MS20002C8	96906	222	59
MS20002C8	96906	222	73
MS20002C8	96906	222	83
MS20002C8	96906	222	96
MS20002C8	96906	240	6
MS20002C8	96906	244	48
MS20002C8	96906	244	53
MS20002C8	96906	244	57
MS20002C8	96906	244	63
MS20002C8	96906	244	68
MS20002C8	96906	244	80
MS20002C8	96906	244	85
MS20002C8	96906	244	91
MS20002C8	96906	244	96
MS20002C8	96906	KITS	
MS20002C9	96906	45	27
MS20002C9	96906	75	56
MS20004H22	96906	BULK	
MS20004H30	96906	BULK	
MS20005-19	96906	11	36
MS20005-19	96906	BULK	
MS20005-21	96906	56	9
MS20006-18	96906	11	35
MS20006-20	96906	11	27
MS20006-24	96906	50	6
MS20006-24	96906	KITS	
MS2002-6	96906	81	182B
MS20034-2	96906	219A	139
MS20034-2	96906	219A	27
MS20066-13	96906	22	45
MS20073-03-04	96906	BULK	
MS20073-03-05	96906	BULK	
MS20073-03-07	96906	76	58A
MS20073-04-03	96906	BULK	
MS20073-04-06	96906	280	6
MS20073-04-07	96906	280	3
MS20073-04-10	96906	BULK	

REFERENCE NUMBER	MFG CODE	FIG NUMBER	ITEM NUMBER
MS20073-05-24	96906	BULK	
MS20073-08-11	96906	62	84
MS20073-08-11	96906	QC1	188
MS20073-08-11	96906	KITS	
MS20074-03-03	96906	76	175
MS20074-03-03	96906	83	104
MS20074-03-04	96906	154	10
MS20074-04-04	96906	F19	3
MS20074-04-04	96906	210	7
MS20074-04-05	96906	83	21A
MS20074-04-05	96906	210	4
MS20074-04-05	96906	KITS	
MS20074-05-15	96906	BULK	
MS20074-06-05	96906	BULK	
MS20183N5	96906	11	108
MS20201KP10A	96906	42B	57
MS20201KP6A	96906	22	47
MS20206DSP4	96906	42B	75A
MS20218-2	96906	223	224
MS20221-1	96906	22	33
MS20221A1	96906	22	33
MS20221A1	96906	22	35
MS20221A2	96906	F15	19
MS20221A2	96906	F15	30
MS20221A2	96906	F15	37
MS20221A2	96906	F15	43
MS20221A2	96906	F15	9
MS20221A2	96906	F20	12
MS20221A2	96906	263	16
MS20224-5	96906	223	124
MS20230BS2	96906	BULK	
MS20230B10	96906	BULK	
MS20230WBS2	96906	BULK	
MS20253-2-3600	96906	BULK	
MS20253-2-385	96906	18	126
MS20253-2-385	96906	18	133
MS20253-2-385	96906	18	139
MS20253-2-385	96906	18	4A
MS20253-2-600	96906	33	30
MS20253-2-7100	96906	BULK	
MS20253P2-1600	96906	18	42
MS20253P2-385	96906	18	
MS20253P2-7200	96906	BULK	
MS20253P3-1800	96906	21	13
MS20253P3-1800	96906	21	8
MS20253P3-1800	96906	BULK	
MS20253P3-7200	96906	BULK	
MS20253P4-7200	96906	BULK	
MS20253P4-934	96906	18	34
MS20253P4-934	96906	18	84
MS20253P5-2150	96906	21	13A
MS20253P5-7200	96906	BULK	
MS20257HC4-7200	96906	BULK	
MS20257HP4-7200	96906	BULK	
MS20364-1018		KITS	
MS20364-1032		KITS	
MS20364-1032	96906	F16	4
MS20364-1032	96906	F16	47
MS20364-1032	96906	178	69
MS20364-1032	96906	218	74C
MS20364-1032	96906	219A	179
MS20364-1032	96906	219A	184
MS20364-1032	96906	219A	74
MS20364-1032	96906	219A	84
MS20364-1032C		KITS	
MS20364-524		KITS	
MS20364-820		KITS	
MS20364D720		KITS	
MS20364D720	96906	262	36
MS20364D720	96906	262	48
MS20365-1032	96906	F17	29
MS20365-1032C		KITS	
MS20365-428A		KITS	
MS20365-440C		KITS	
MS20365-918	96906	KITS	
MS20392-1C11	96906	184	7
MS20392-1C11	96906	37A	58
MS20392-1C13	96906	37A	71
MS20392-1C13	96906	37A	78
MS20392-1C15		KITS	
MS20392-1C15	96906	36	26
MS20392-1C15	96906	125	3
MS20392-1C17	96906	BULK	
MS20392-1C19	96906	184	6
MS20392-1C21	96906	18	
MS20392-1C21	96906	37A	85
MS20392-1C23	96906	20	86
MS20392-1C23	96906	20	99
MS20392-1C31	96906	BULK	
MS20392-1C35	96906	BULK	
MS20392-1C51	96906	18	
MS20392-1C61	96906	BULK	
MS20392-1C63	96906	BULK	
MS20392-1C7	96906	BULK	
MS20392-2-11		KITS	
MS20392-2-43	96906	22	38
MS20392-2C11	96906	59	36A
MS20392-2C13	96906	18	31
MS20392-2C13	96906	18	81
MS20392-2C13	96906	37A	53
MS20392-2C13	96906	37A	65
MS20392-2C13	96906	37A	82
MS20392-2C13	96906	33	39A
MS20392-2C15	96906	33	41
MS20392-2C15	96906	KITS	
MS20392-2C17	96906	36A	16
MS20392-2C17	96906	36B	19
MS20392-2C17	96906	BULK	
MS20392-2C19	96906	BULK	
MS20392-2C21	96906	18	
MS20392-2C21	96906	37A	52
MS20392-2C21	96906	37A	59
MS20392-2C21	96906	37A	64
MS20392-2C21	96906	37A	72
MS20392-2C21	96906	37A	79
MS20392-2C23	96906	BULK	
MS20392-2C25	96906	37A	40
MS20392-2C25	96906	KITS	
MS20392-2C29		KITS	
MS20392-2C29	96906	125	5
MS20392-2C31	96906	129	
MS20392-2C31	96906	KITS	
MS20392-2C33	96906	263	21
MS20392-2C35	96906	18	
MS20392-2C35	96906	265	15
MS20392-2C35	96906	268	82
MS20392-2C37	96906	183	52
MS20392-2C39	96906	18	38
MS20392-2C39	96906	18	87
MS20392-2C39	96906	31	
MS20392-2C41	96906	222	
MS20392-2C41	96906	265	179
MS20392-2C41	96906	268	143
MS20392-2C45	96906	BULK	
MS20392-2C47	96906	22	37
MS20392-2C49	96906	BULK	
MS20392-2C53	96906	263	14
MS20392-2C57	96906	BULK	
MS20392-2C7	96906	264	1C
MS20392-3C13	96906	BULK	
MS20392-3C17	96906	18	

REFERENCE NUMBER	MFG CODE	FIG NUMBER	ITEM NUMBER
MS20392-3C17	96906	20	108
MS20392-3C17	96906	207	
MS20392-3C17	96906	208	19
MS20392-3C17	96906	KITS	
MS20392-3C19	96906	BULK	
MS20392-3C21	96906	20	105
MS20392-3C23	96906	15	31
MS20392-3C23	96906	KITS	
MS20392-3C29	96906	18	
MS20392-3C29	96906	28	25
MS20392-3C29	96906	KITS	
MS20392-3C43	96906	37	26
MS20392-3C43	96906	265	10
MS20392-3C43	96906	268	75
MS20392-3C45	96906	17	
MS20392-3C45	96906	17	3
MS20392-3C47	96906	BULK	
MS20392-3C69	96906	265	176
MS20392-3C69	96906	268	146
MS20392-3C69	96906	BULK	
MS20392-3C77	96906	BULK	
MS20392-4C23	96906	16	26
MS20392-9C27	96906	BULK	
MS20395-1C15	96906	263	17
MS20426AD3-10	96906	BULK	
MS20426AD3-12	96906	BULK	
MS20426AD3-16	96906	BULK	
MS20426AD3-3	96906	BULK	
MS20426AD3-4	96906	BULK	
MS20426AD3-5	96906	91	8C
MS20426AD3-5	96906	BULK	
MS20426AD3-6	96906	38	
MS20426AD3-6	96906	BULK	
MS20426AD3-8	96906	BULK	
MS20426AD4-10	96906	BULK	
MS20426AD4-12	96906	269	138
MS20426AD4-16	96906	BULK	
MS20426AD4-4	96906	BULK	
MS20426AD4-5	96906	BULK	
MS20426AD4-6	96906	BULK	
MS20426AD4-7	96906	BULK	
MS20426AD4-8	96906	F14	15B
MS20426AD4-8	96906	BULK	
MS20426AD5-12	96906	BULK	
MS20426AD5-16	96906	BULK	
MS20426AD5-22	96906	BULK	
MS20426AD5-4	96906	BULK	
MS20426AD5-5	96906	BULK	
MS20426AD5-6	96906	255	23A
MS20426AD5-6	96906	BULK	
MS20426AD5-7	96906	BULK	
MS20426AD5-8	96906	BULK	
MS20426AD6-6	96906	BULK	
MS20426AD6-8	96906	BULK	
MS20426AD6-9	96906	BULK	
MS20426A2-4	96906	BULK	
MS20426A3-10	96906	BULK	
MS20426A3-2	96906	BULK	
MS20426A3-4	96906	BULK	
MS20426A3-5	96906	BULK	
MS20426A3-6	96906	BULK	
MS20426A4-10	96906	BULK	
MS20426A4-4	96906	BULK	
MS20426A4-5	96906	BULK	
MS20426A4-7	96906	BULK	
MS20426A4-8	96906	BULK	
MS20426A5-5	96906	BULK	
MS20426A5-6	96906	BULK	
MS20426B3-8	96906	BULK	
MS20426B4-24	96906	BULK	
MS20426B4-3	96906	BULK	
MS20426B6-6	96906	BULK	
MS20426B7-6	96906	BULK	
MS20426DD6-16	96906	BULK	
MS20426D3-4	96906	BULK	
MS20426D3-6	96906	BULK	
MS20426D4-5	96906	BULK	
MS20426D4-6	96906	BULK	
MS20426D4-7	96906	BULK	
MS20426D5-16	96906	102	30A
MS20426D5-16	96906	103	26A
MS20426D5-16	96906	BULK	
MS20427-5C16	96906	102	29A
MS20427-5C16	96906	102	30A
MS20427-5C16	96906	BULK	
MS20427-6C16	96906	BULK	
MS20427F4-7	96906	BULK	
MS20427F6-7	96906	BULK	
MS20427M3-4	96906	BULK	
MS20427M3-6	96906	BULK	
MS20427M4-6	96906	BULK	
MS20427M4-9	96906	BULK	
MS20427M5-10	96906	BULK	
MS20427M5-5	96906	BULK	
MS20427M5-6	96906	BULK	
MS20427M5-7	96906	BULK	
MS20427M5-8	96906	BULK	
MS20427M5-9	96906	BULK	
MS20427M6-6	96906	BULK	
MS2047AD4-12	96906	BULK	
MS20470AD2-4	96906	BULK	
MS20470AD2-6	96906	BULK	
MS20470AD3-16	96906	BULK	
MS20470AD3-18	96906	BULK	
MS20470AD3-20	96906	BULK	
MS20470AD3-22	96906	BULK	
MS20470AD3-3	96906	BULK	
MS20470AD3-4	96906	BULK	
MS20470AD3-5	96906	BULK	
MS20470AD3-6	96906	BULK	
MS20470AD3-8	96906	BULK	
MS20470AD4-10	96906	BULK	
MS20470AD4-14	96906	BULK	
MS20470AD4-16	96906	BULK	
MS20470AD4-24	96906	BULK	
MS20470AD4-3	96906	BULK	
MS20470AD4-4	96906	BULK	
MS20470AD4-5	96906	32	16
MS20470AD4-5	96906	213	
MS20470AD4-5	96906	BULK	
MS20470AD4-6	96906	93	15B
MS20470AD4-6	96906	BULK	
MS20470AD4-7	96906	BULK	
MS20470AD4-8	96906	BULK	
MS20470AD5-10	96906	BULK	
MS20470AD5-12	96906	BULK	
MS20470AD5-16	96906	BULK	
MS20470AD5-4	96906	BULK	
MS20470AD5-5	96906	BULK	
MS20470AD5-6	96906	BULK	
MS20470AD5-7	96906	31	
MS20470AD5-7	96906	F20	26
MS20470AD5-7	96906	BULK	
MS20470AD5-8	96906	BULK	
MS20470AD5-9	96906	BULK	
MS20470AD6-16	96906	BULK	
MS20470AD6-4	96906	BULK	
MS20470AD6-6	96906	BULK	
MS20470AD6-7	96906	BULK	
MS20470A2-3	96906	252	17
MS20470A3-10	96906	BULK	
MS20470A3-16	96906	BULK	

REFERENCE NUMBER	MFG CODE	FIG NUMBER	ITEM NUMBER
MS20470A3-6	96906	BULK	
MS20470A3-7	96906	BULK	
MS20470A3-9	96906	BULK	
MS20470A4-14	96906	BULK	
MS20470A4-4	96906	BULK	
MS20470A4-5	96906	BULK	
MS20470A5-7	96906	BULK	
MS20470A5-9	96906	BULK	
MS20470B3-6	96906	BULK	
MS20470B4-3	96906	BULK	
MS20470B5-5	96906	BULK	
MS20470B5-6	96906	BULK	
MS20470B6-6	96906	BULK	
MS20470B8-8	96906	BULK	
MS20470DD4-14	96906	BULK	
MS20470DD4-8	96906	BULK	
MS20470DD5-7	96906	BULK	
MS20470DD6-10	96906	BULK	
MS20470DD6-12	96906	BULK	
MS20470DD6-16	96906	BULK	
MS20470DD6-4	96906	BULK	
MS20470DD6-6	96906	BULK	
MS20470DD6-7	96906	31	
MS20470DD6-8	96906	BULK	
MS20470DD6-9	96906	BULK	
MS20470DD8-10	96906	92	105
MS20470DD8-10	96906	92	37A
MS20470DD8-10	96906	92	51A
MS20470DD8-10	96906	92	91A
MS20470DD8-10	96906	BULK	
MS20470DD8-12	96906	BULK	
MS20470DD8-28	96906	BULK	
MS20470DD8-8	96906	90	5
MS20470DD8-9	96906	BULK	
MS20470D5-8	96906	BULK	
MS20470D7-8	96906	BULK	
MS20500-428	96906	280	1
MS20503-1414	96906	BULK	
MS20600AD4W1	96906	BULK	
MS20600AD4W2	96906	BULK	
MS20600AD4W3	96906	BULK	
MS20600AD4W4	96906	BULK	
MS20600AD4W5	96906	BULK	
MS20600AD4W6	96906	BULK	
MS20600AD4W8	96906	BULK	
MS20600AD5W2	96906	BULK	
MS20600AD5W3	96906	BULK	
MS20600AD5W4	96906	BULK	
MS20600AD5W5	96906	BULK	
MS20600AD5W6	96906	BULK	
MS20600AD5W7	96906	BULK	
MS20600AD5W8	96906	BULK	
MS20600AD6W1	96906	BULK	
MS20600AD6W12	96906	BULK	
MS20600AD6W2	96906	BULK	
MS20600AD6W3	96906	BULK	
MS20600AD6W4	96906	BULK	
MS20600AD6W5	96906	BULK	
MS20600AD6W6	96906	BULK	
MS20600AD6W7	96906	BULK	
MS20600AD6W8	96906	BULK	
MS20600AD6W9	96906	BULK	
MS20600B4W1	96906	BULK	
MS20600B4W2	96906	BULK	
MS20600B4W3	96906	BULK	
MS20600B4W4	96906	BULK	
MS20600B4W5	96906	BULK	
MS20600B4W6	96906	BULK	
MS20600B5W1	96906	BULK	
MS20600B5W2	96906	BULK	
MS20600B5W3	96906	BULK	
MS20600B5W4	96906	BULK	
MS20600B5W6	96906	BULK	
MS20600B5W7	96906	BULK	
MS20600B6-9	96906	BULK	
MS20600B6W1	96906	BULK	
MS20600B6W10	96906	BULK	
MS20600B6W11	96906	BULK	
MS20600B6W12	96906	BULK	
MS20600B6W2	96906	BULK	
MS20600B6W4	96906	BULK	
MS20600B6W5	96906	BULK	
MS20600B6W6	96906	BULK	
MS20600B6W7	96906	BULK	
MS20600B6W8	96906	BULK	
MS20600MP5W2	96906	BULK	
MS20600M4W1	96906	BULK	
MS20600M4W3	96906	BULK	
MS20600M5W2	96906	BULK	
MS20600M5W3	96906	BULK	
MS20600M5W7	96906	11B	
MS20600M5W7	96906	BULK	
MS20600M8W4	96906	BULK	
MS20600M8W5	96906	BULK	
MS20601AD4W2	96906	BULK	
MS20601AD4W4	96906	BULK	
MS20601AD4W5	96906	BULK	
MS20601AD4W6	96906	BULK	
MS20601AD5W6	96906	BULK	
MS20613-4P5	96906	BULK	
MS20615-3M10	96906	90	8
MS20615-3M12	96906	BULK	
MS20615-3M12	96906	BULK	
MS20615-3M8	96906	BULK	
MS20615-3M9	96906	BULK	
MS20615-4M10	96906	BULK	
MS20615-4M12	96906	BULK	
MS20615-4M14	96906	92	14
MS20615-4M16	96906	92	39
MS20615-4M16	96906	92	53
MS20615-4M16	96906	92	69
MS20615-4M16	96906	92	97
MS20615-4M16	96906	BULK	
MS20615-4M16	96906	75	34
MS20615-4M20	96906	261	15
MS20615-4M4	96906	BULK	
MS20615-4M4	96906	BULK	
MS20615-4M5	96906	BULK	
MS20615-4M6	96906	BULK	
MS20615-4M8	96906	BULK	
MS20615-4M9	96906	BULK	
MS20615-5M10	96906	BULK	
MS20615-5M4	96906	BULK	
MS20615-5M5	96906	BULK	
MS20615-5M6	96906	BULK	
MS20615-5M7	96906	BULK	
MS20615-5M8	96906	BULK	
MS20615-6M12	96906	BULK	
MS20615-6M16	96906	BULK	
MS20615-6M18	96906	71	111A
MS20615-6M18	96906	BULK	
MS20615-6M4	96906	BULK	
MS20615-6M8	96906	BULK	
MS20659-111	96906	BULK	
MS20664C2	96906	BULK	
MS20664C4	96906	270	
MS20667-3	96906	BULK	
MS20667-4	96906	BULK	
MS20668-3	96906	BULK	
MS20756D16	96906	213	7
MS20760D16	96906	213	
MS20760D16	96906	213	10

REFERENCE NUMBER	MFG CODE	FIG NUMBER	ITEM NUMBER
MS20760D16	96906	220	
MS20760D16	96906	221	33
MS20760D16	96906	221	41
MS20760D16	96906	221	56
MS20760D16	96906	221	57
MS20760D16	96906	221	69
MS20760D16	96906	KITS	
MS20760D8	96906	129	23D
MS20762D16	96906	213	8
MS20813-1	96906	50	15
MS20819-16D	96906	BULK	
MS20819-2D	96906	BULK	
MS20819-4	96906	BULK	
MS20819-4D	96906	BULK	
MS20819-4J	96906	BULK	
MS20819-6C	96906	BULK	
MS20819-6D	96906	BULK	
MS20819-8C	96906	BULK	
MS20819-8D	96906	BULK	
MS20822-4	96906	257	2A
MS20822-4D		KITS	
MS20822-4D	96906	262	55
MS20822-6-2D	96906	83	259
MS20913-2S	96906	261	1
MS20913-2S	96906	261	3
MS20913-3D	96906	81	194
MS20913-3D	96906	83	363
MS20913-4D	96906	83	179
MS20995C32	96906	BULK	
MS20995F41	96906	BULK	
MS20995NC32	96906	BULK	
MS21025-20	96906	239	91
MS21025-20	96906	244	76
MS21025-20	96906	KITS	
MS21025-24	96906	239	20
MS21025-24	96906	KITS	
MS21025-28	96906	45	12
MS21035-32	96906	44	22
MS21040-7	96906	34	27
MS21042-02	96906	268	58
MS21042-04	96906	182	
MS21042-04	96906	268	195D
MS21042-06	96906	100	24
MS21042-06	96906	190	4
MS21042-06	96906	190	7
MS21042-06	96906	196	51A
MS21042-06	96906	275	
MS21042-06	96906	KITS	
MS21042-06	96906	182A	28
MS21042-08	96906	18	
MS21042-08	96906	34	
MS21042-08	96906	37	45
MS21042-08	96906	45	19
MS21042-08	96906	188	
MS21042-08	96906	191	3
MS21042-08	96906	191	36
MS21042-08	96906	196	10A
MS21042-08	96906	196	7A
MS21042-08	96906	198	
MS21042-08	96906	209	
MS21042-08	96906	228	129D
MS21042-08	96906	251	58B
MS21042-08	96906	253	48
MS21042-08	96906	253	41
MS21042-08	96906	255	2A
MS21042-08	96906	268	158A
MS21042-08	96906	268	202
MS21042-08	96906	276	
MS21042-08	96906	279	
MS21042-08	96906	KITS	
MS21042-08	96906	189A	2
MS21042-3		KITS	
MS21042-3	96906	15	10
MS21042-3	96906	15	3A
MS21042-3	96906	16	47
MS21042-3	96906	18	
MS21042-3	96906	20	11
MS21042-3	96906	20	18
MS21042-3	96906	20	36
MS21042-3	96906	20	41
MS21042-3	96906	20	5
MS21042-3	96906	20	70
MS21042-3	96906	20	80
MS21042-3	96906	20	93
MS21042-3	96906	25	8
MS21042-3	96906	31	
MS21042-3	96906	31	
MS21042-3	96906	31	20B
MS21042-3	96906	32	
MS21042-3	96906	32	34
MS21042-3	96906	32	40
MS21042-3	96906	32	53
MS21042-3	96906	34	
MS21042-3	96906	36	
MS21042-3	96906	44	11C
MS21042-3	96906	45	21
MS21042-3	96906	47	1
MS21042-3	96906	59	
MS21042-3	96906	62	
MS21042-3	96906	63	37
MS21042-3	96906	73	44A
MS21042-3	96906	76	179C
MS21042-3	96906	76	55B
MS21042-3	96906	76	72A
MS21042-3	96906	76	72D
MS21042-3	96906	95	149
MS21042-3	96906	109	
MS21042-3	96906	11C	71
MS21042-3	96906	115	
MS21042-3	96906	116	
MS21042-3	96906	117	
MS21042-3	96906	119	
MS21042-3	96906	119	22
MS21042-3	96906	119	33
MS21042-3	96906	119	48
MS21042-3	96906	129	
MS21042-3	96906	135	1
MS21042-3	96906	138	10
MS21042-3	96906	139	
MS21042-3	96906	143	
MS21042-3	96906	178	127
MS21042-3	96906	178	148
MS21042-3	96906	179	47
MS21042-3	96906	184	4
MS21042-3	96906	188	
MS21042-3	96906	188	42
MS21042-3	96906	188	49B
MS21042-3	96906	188	52A
MS21042-3	96906	191	39
MS21042-3	96906	191	41
MS21042-3	96906	191	7
MS21042-3	96906	191	9
MS21042-3	96906	196	
MS21042-3	96906	196	37
MS21042-3	96906	196	49A
MS21042-3	96906	198	
MS21042-3	96906	198	
MS21042-3	96906	198	23
MS21042-3	96906	198	28
MS21042-3	96906	204	
MS21042-3	96906	204	25
MS21042-3	96906	207	

REFERENCE NUMBER	MFG CODE	FIG NUMBER	ITEM NUMBER
MS21042-3	96906	207	
MS21042-3	96906	209	
MS21042-3	96906	213	
MS21042-3	96906	220	
MS21042-3	96906	223	47
MS21042-3	96906	226	20
MS21042-3	96906	228	56
MS21042-3	96906	228	81
MS21042-3	96906	228	89
MS21042-3	96906	230	6
MS21042-3	96906	231	4
MS21042-3	96906	249	20
MS21042-3	96906	253	44A
MS21042-3	96906	255	1
MS21042-3	96906	255	10
MS21042-3	96906	255	16
MS21042-3	96906	255	4A
MS21042-3	96906	256	13
MS21042-3	96906	259	15E
MS21042-3	96906	259	6C
MS21042-3	96906	263	23
MS21042-3	96906	268	182
MS21042-3	96906	270	2A
MS21042-3	96906	270	61D
MS21042-3	96906	273	11C
MS21042-3	96906	273	18C
MS21042-3	96906	273	30
MS21042-3	96906	KITS	
MS21042-4		KITS	
MS21042-4	96906	51	3
MS21042-4	96906	212	11
MS21042-4	96906	268	12
MS21042-4	96906	268	209A
MS21042-4	96906	268	229
MS21042-4	96906	268	241
MS21042-4	96906	268	265
MS21042-4	96906	268	32
MS21042-4	96906	268	5
MS21042-4	96906	285	29
MS21042-6	96906	BULK	
MS21042L04	96906	210	81
MS21042L04	96906	210	98
MS21042L06	96906	210	13
MS21042L06	96906	210	14
MS21042L06	96906	210	20
MS21042L06	96906	210	73
MS21042L06	96906	210	78
MS21042L06	96906	210	84
MS21042L06	96906	210	86
MS21042L06	96906	210	95
MS21042L08	96906	210	42
MS21042L3	96906	18	161B
MS21042L3	96906	51	35
MS21042L3	96906	51	38
MS21042L3	96906	53	26A
MS21042L3	96906	53	31
MS21042L3	96906	54	13
MS21042L3	96906	54	22
MS21042L3	96906	210	16
MS21042L3	96906	210	2
MS21042L3	96906	210	67
MS21042L3	96906	265	101
MS21042L3	96906	268	127
MS21042L3	96906	KITS	
MS21042L4	96906	33	35
MS21042L4	96906	KITS	
MS21042L5	96906	BULK	
MS21042L6	96906	BULK	
MS21043-04	96906	68	19
MS21043-04	96906	68	21
MS21043-08	96906	68	42
MS21043-3	96906	62	45
MS21043-3	96906	62	49
MS21043-3	96906	QC1	150A
MS21043-3	96906	QC1	152A
MS21044B04	96906	BULK	
MS21044B06	96906	157	73
MS21044C04	96906	KITS	
MS21044C06	96906	228	147B
MS21044C06	96906	BULK	
MS21044C06	96906	KITS	
MS21044C08	96906	204	19A
MS21044C08	96906	KITS	
MS21044C3	96906	275	
MS21044C3	96906	KITS	
MS21044C4	96906	BULK	
MS21044C4	96906	KITS	
MS21044C5	96906	BULK	
MS21044C6	96906	BULK	
MS21044D04	96906	157	87
MS21044D3	96906	34	
MS21044D4	96906	21	
MS21044D4	96906	21	27D
MS21044LN3		KITS	
MS21044N04	96906	188	
MS21044N04	96906	189	3
MS21044N04	96906	189	5
MS21044N04	96906	204	
MS21044N04	96906	189A	18
MS21044N04	96906	189A	9
MS21044N04	96906	189	9
MS21044N06	96906	197	17
MS21044N06	96906	189A	15
MS21044N06	96906	189A	25
MS21044N06		KITS	
MS21044N04	96906	33	34E
MS21044N04	96906	42	
MS21044N04	96906	62	
MS21044N04	96906	62	75
MS21044N04	96906	76	112A
MS21044N04	96906	QC1	
MS21044N04	96906	157	80
MS21044N04	96906	158	72
MS21044N04	96906	182	
MS21044N04	96906	183	15
MS21044N04	96906	183	38
MS21044N04	96906	183	45
MS21044N04	96906	188	
MS21044N04	96906	188	10
MS21044N04	96906	190	89
MS21044N04	96906	191	33
MS21044N04	96906	192	
MS21044N04	96906	192	10
MS21044N04	96906	192	29
MS21044N04	96906	193	28C
MS21044N04	96906	194	56
MS21044N04	96906	195	33E
MS21044N04	96906	198	
MS21044N04	96906	202	27
MS21044N04	96906	202	29
MS21044N04	96906	202	34
MS21044N04	96906	204	
MS21044N04	96906	204	13A
MS21044N04	96906	204	8
MS21044N04	96906	230	48
MS21044N04	96906	230	74
MS21044N04	96906	231	116
MS21044N04	96906	231	118
MS21044N04	96906	248	79
MS21044N04	96906	248	8
MS21044N04	96906	248	91
MS21044N04	96906	262	18

REFERENCE NUMBER	MFG CODE	FIG NUMBER	ITEM NUMBER
MS21044N04	96906	265	172
MS21044N04	96906	268	135
MS21044N04	96906	268	149B
MS21044N04	96906	275	
MS21044N04	96906	277	
MS21044N04	96906	KITS	
MS21044N04	96906	182A	33
MS21044N04	96906	182A	36
MS21044N06	96906	188	
MS21044N06	96906	188	15
MS21044N06	96906	190	46
MS21044N06	96906	204	
MS21044N06	96906	275	
MS21044N06	96906	275	29
MS21044N06	96906	189A	12
MS21044N08	96906	195	
MS21044N08	96906	195	32
MS21044N08	96906	198	
MS21044N08	96906	264	8
MS21044N08	96906	275	27
MS21044N10	96906	BULK	
MS21044N10	96906	KITS	
MS21044N12	96906	BULK	
MS21044N14	96906	BULK	
MS21044N3	96906	10	
MS21044N3	96906	13	12
MS21044N3	96906	13	90
MS21044N3	96906	21	49
MS21044N3	96906	26	9
MS21044N3	96906	28	38
MS21044N3	96906	31	19
MS21044N3	96906	34	
MS21044N3	96906	36	
MS21044N3	96906	42	
MS21044N3	96906	45	11A
MS21044N3	96906	60	12
MS21044N3	96906	100	5
MS21044N3	96906	110	
MS21044N3	96906	112	77
MS21044N3	96906	117	
MS21044N3	96906	119	
MS21044N3	96906	119	380
MS21044N3	96906	119	94
MS21044N3	96906	167	24
MS21044N3	96906	178	107
MS21044N3	96906	182	
MS21044N3	96906	188	
MS21044N3	96906	195	
MS21044N3	96906	195	24
MS21044N3	96906	195	28
MS21044N3	96906	195	50
MS21044N3	96906	195	6
MS21044N3	96906	198	
MS21044N3	96906	198	23
MS21044N3	96906	198	28
MS21044N3	96906	204	
MS21044N3	96906	204	25
MS21044N3	96906	207	
MS21044N3	96906	207	
MS21044N3	96906	207	
MS21044N3	96906	208	33
MS21044N3	96906	223	70
MS21044N3	96906	229	4
MS21044N3	96906	251	20
MS21044N3	96906	251	9
MS21044N3	96906	261	18
MS21044N3	96906	264	3A
MS21044N3	96906	274	11
MS21044N3	96906	275	
MS21044N3	96906	36A	28
MS21044N3	96906	36A	32
MS21044N3	96906	36A	38
MS21044N3	96906	36A	39
MS21044N3	96906	36B	
MS21044N3	96906	BULK	
MS21044N3	96906	KITS	
MS21044N4	96906	11	45
MS21044N4	96906	11	46
MS21044N4	96906	21	49A
MS21044N4	96906	22	54
MS21044N4	96906	33	3
MS21044N4	96906	37	1
MS21044N4	96906	37	14
MS21044N4	96906	44	12
MS21044N4	96906	61	23
MS21044N4	96906	75	5
MS21044N4	96906	119	376
MS21044N4	96906	207	
MS21044N4	96906	211	13
MS21044N4	96906	211	18
MS21044N4	96906	213	
MS21044N4	96906	219	
MS21044N4	96906	220	
MS21044N4	96906	222	
MS21044N4	96906	262	1
MS21044N4	96906	265	301
MS21044N4	96906	KITS	
MS21044N5	96906	11	48
MS21044N5	96906	21	26C
MS21044N5	96906	60	1
MS21044N5	88044	61	5
MS21044N5	96906	238	8
MS21044N5	96906	KITS	
MS21044N6	96906	11	127C
MS21044N6	96906	11	21
MS21044N6	96906	11	58
MS21044N6	96906	11	90
MS21044N7	96906	11	22
MS21044N7	96906	60	34
MS21044N7	96906	61	36
MS21044N8	96906	11	40
MS21044N8	96906	11	41
MS21044N8	96906	72	7
MS21044N8	96906	240	102
MS21044N8	96906	KITS	
MS21044N9	96906	KITS	
MS21045-08	96906	BULK	
MS21045-3	96906	62	7H
MS21045-3	96906	76	
MS21045-3	96906	76	102
MS21045-3	96906	76	11A
MS21045-3	96906	76	12A
MS21045-3	96906	76	146A
MS21045-3	96906	76	169
MS21045-3	96906	76	39
MS21045-3	96906	81	49
MS21045-3	96906	81	5
MS21045-3	96906	81	8
MS21045-3	96906	81	9
MS21045-3	96906	83	106
MS21045-3	96906	83	127
MS21045-3	96906	83	15
MS21045-3	96906	83	150
MS21045-3	96906	83	162
MS21045-3	96906	83	29
MS21045-3	96906	83	39
MS21045-3	96906	83	48
MS21045-3	96906	83	55
MS21045-3	96906	83	6
MS21045-3	96906	83	74
MS21045-3	96906	88	18
MS21045-3	96906	88	24F

REFERENCE NUMBER	MFG CODE	FIG NUMBER	ITEM NUMBER
MS21045-3	96906	88	46C
MS21045-3	96906	89	18
MS21045-3	96906	89	39
MS21045-3	96906	89	43
MS21045-3	96906	89	89
MS21045-3	96906	204	1A
MS21045-3	96906	249	27
MS21045-3	96906	262	34
MS21045-3	96906	262	47
MS21045-3	96906	37A	31
MS21045-3	96906	37A	96
MS21045-4	96906	37	1
MS21045-4	96906	37	35A
MS21045-4	96906	71	113
MS21045-4	96906	71	138
MS21045-4	96906	76	118A
MS21045-4	96906	76	120
MS21045-4	96906	76	122
MS21045-4	96906	76	126B
MS21045-4	96906	76	134
MS21045-4	96906	76	156
MS21045-4	96906	76	2
MS21045-4	96906	76	56
MS21045-4	96906	76	59
MS21045-4	96906	76	78
MS21045-4	96906	76	8A
MS21045-4	96906	76	81
MS21045-4	96906	81	149A
MS21045-4	96906	81	165
MS21045-4	96906	81	18
MS21045-4	96906	81	187
MS21045-4	96906	81	22
MS21045-4	96906	81	28
MS21045-4	96906	81	35
MS21045-4	96906	81	38
MS21045-4	96906	81	41
MS21045-4	96906	81	57
MS21045-4	96906	81	74
MS21045-4	96906	81	82
MS21045-4	96906	83	114
MS21045-4	96906	83	132
MS21045-4	96906	83	137
MS21045-4	96906	83	153
MS21045-4	96906	83	186
MS21045-4	96906	83	218
MS21045-4	96906	83	233
MS21045-4	96906	83	297
MS21045-4	96906	83	371
MS21045-4	96906	88	24
MS21045-4	96906	88	27
MS21045-4	96906	88	3
MS21045-4	96906	88	56
MS21045-4	96906	89	25
MS21045-4	96906	89	94
MS21045-4	96906	89	98
MS21045-4	96906	37A	103
MS21045-4	96906	37A	15
MS21045-4	96906	37A	47
MS21045-4	96906	37A	62
MS21045-4	96906	37A	69
MS21045-4	96906	37A	93
MS21045-5	96906	56	10
MS21045-5	96906	76	138
MS21045-5	96906	76	142A
MS21045-5	96906	76	20
MS21045-5	96906	76	24
MS21045-5	96906	76	29
MS21045-5	96906	76	38
MS21045-5	96906	76	84
MS21045-5	96906	80	1
MS21045-5	96906	81	143

REFERENCE NUMBER	MFG CODE	FIG NUMBER	ITEM NUMBER
MS21045-5	96906	83	12
MS21045-5	96906	83	169
MS21045-5	96906	83	20A
MS21045-5	96906	83	3
MS21045-5	96906	83	303
MS21045-5	96906	83	327
MS21045-5	96906	83	367
MS21045-5	96906	83	95
MS21045-5	96906	87	1
MS21045-5	96906	89	30
MS21045-6	96906	76	126B
MS21045-6	96906	81	61
MS21045-6	96906	83	201
MS21045-6	96906	83	26
MS21045-6	96906	83	33
MS21045-6	96906	88	1
MS21045-6	96906	89	1
MS21045-6	96906	81	132
MS21045-7	96906	62	6A
MS21045-8	96906	KITS	
MS21045-8	96906	33	16A
MS21045C3	96906	33	23A
MS21045C3	96906	33	26A
MS21045C3	96906	92	18
MS21045C3	96906	92	76
MS21045C3	96906	95	12
MS21045C3	96906	QC1	52
MS21045C3	96906	217	3
MS21045C3	96906	KITS	
MS21045C3	96906	62	
MS21045C4	96906	97	11A
MS21045C4	96906	97	16
MS21045C4	96906	97	3
MS21045C4	96906	98	2
MS21045C4	96906	98	5
MS21045C4	96906	99	2
MS21045C4	96906	218	
MS21045C4	96906	219A	138
MS21045C4	96906	219A	26
MS21045C4	96906	BULK	
MS21045C6	96906	62	16
MS21045C8	96906	QC1	184A
MS21045C8	96906	97	7A
MS21045LC4	96906	BULK	
MS21045L08	96906	KITS	
MS21045L3	96906	83	119
MS21045L4	96906	91	7
MS21045L4	96906	92	30
MS21045L4	96906	92	84
MS21045L4	96906	93	11
MS21045L4	96906	93	4
MS21045L4	96906	93	6
MS21045L4	96906	11B	
MS21045L4	96906	KITS	
MS21045L5	96906	22	43A
MS21045L5	96906	83	277
MS21045L5	96906	83	284
MS21045L5	96906	91	10
MS21045L5	96906	F20	13
MS21045L5	96906	KITS	
MS21045L5	96906	55	13
MS21045L6	96906	69	18
MS21045L6	96906	70	10
MS21045L6	96906	QC1	173
MS21045L6	96906	KITS	
MS21045L6	96906	83	291
MS21045L6	96906	91	10
MS21045L7	96906	BULK	
MS21045L7	96906	184	50
MS21045L8	96906	184	
MS21047-04	96906	BULK	
MS21047-06			
MS21049L4			

REFERENCE NUMBER	MFG CODE	FIG NUMBER	ITEM NUMBER
MS21055L06	96906	BULK	
MS21055L4	96906	BULK	
MS21059L06K	96906	BULK	
MS21059L08K	96906	BULK	
MS21059L4	96906	11	139
MS21059L4	96906	13	10
MS21059L4	96906	13	40
MS21059L4	96906	13	66
MS21059L4	96906	13	91
MS21059L4	96906	18	
MS21059L4	96906	18	108
MS21059L4	96906	18	59
MS21059L4	96906	18	66
MS21059L4	96906	91	8B
MS21059L4	96906	11A	25A
MS21059L4	96906	11A	43
MS21059L4	96906	11A	56
MS21059L4	96906	11A	73
MS21059L4	96906	11B	
MS21059L4	96906	KITS	
MS21059L5	96906	BULK	
MS21059L6	96906	76	
MS21060-3	96906	33	
MS21060-3K	96906	BULK	
MS21060-4	96906	BULK	
MS21061L04	96906	BULK	
MS21061L06	96906	BULK	
MS21061L08	96906	31	
MS21061L08K	96906	BULK	
MS21061L3	96906	10	
MS21061L3	96906	32	81
MS21062-3	96906	BULK	
MS21063L3-10	96906	BULK	
MS21063L3-16	96906	BULK	
MS21063L3-16-10	96906	10	
MS21063L3-16-14	96906	10	
MS21063L3-16-3	96906	10	
MS21063L3-16-4	96906	10	
MS21063L3-16-7	96906	10	
MS21063L3-7	96906	BULK	
MS21063L3-7-2	96906	32	
MS21063L3-8	96906	BULK	
MS21071L08	96906	428	
MS21071L3	96906	BULK	
MS21073L3	96906	BULK	
MS21075-3	96906	BULK	
MS21075L06	96906	BULK	
MS21075L3	96906	13	97
MS21075L4	96906	10	
MS21075L4	96906	69	25
MS21075L4	96906	284	18
MS21075L4	96906	285	15
MS21075L5	96906	11	130
MS21075L5	96906	284	37
MS21075L5	96906	285	56
MS21076-3	96906	BULK	
MS21076L4	96906	BULK	
MS21077-3	96906	69	33
MS21078-3	96906	BULK	
MS21078-4	96906	BULK	
MS2108N10	96906	47	8
MS21082-4	96906	BULK	
MS21083B3	96906	28	
MS21083B3	96906	62	
MS21083B3	96906	182	
MS21083B3	96906	188	
MS21083B3	96906	188	60
MS21083B3	96906	193	62
MS21083B3	96906	196	14
MS21083B3	96906	BULK	
MS21083B3	96906	KITS	
MS21083B4	96906	100	24
MS21083B8	96906	263	5
MS21083D06	96906	203	24
MS21083D3	96906	18	
MS21083D3	96906	213	
MS21083D3	96906	265	34
MS21083D3	96906	268	50
MS21083D3	96906	KITS	
MS21083D6	96906	265	137
MS21083D6	96906	268	93
MS21083D8	96906	BULK	
MS21083M8	96906	53	1
MS21083N06	96906	196	13A
MS21083N06	96906	196	28
MS21083N06	96906	196	30
MS21083N06	96906	196	34A
MS21083N06	96906	196	55A
MS21083N06	96906	197	40
MS21083N04	96906	182A	46
MS21083N04	96906	189A	41
MS21083N04	96906	189A	85
MS21083N06	96906	157	12
MS21083N06	96906	157	68
MS21083N06	96906	157	76
MS21083N06	96906	157	91
MS21083N06	96906	158	13
MS21083N06	96906	158	68
MS21083N06	96906	158	77
MS21083N06	96906	182	
MS21083N06	96906	188	
MS21083N06	96906	188	47A
MS21083N06	96906	200	
MS21083N08	96906	37	
MS21083N08	96906	232	43
MS21083N10	96906	21	3B
MS21083N10	96906	54	4
MS21083N10	96906	11B	83
MS21083N10	96906	261	13
MS21083N10	96906	KITS	
MS21083N12	96906	269	18
MS21083N12	96906	269	8A
MS21083N14	96906	269	6
MS21083N3	96906	11	39
MS21083N3	96906	11	61A
MS21083N3	96906	15	45B
MS21083N3	96906	17	22
MS21083N3	96906	18	
MS21083N3	96906	28	
MS21083N3	96906	28	14D
MS21083N3	96906	33	10B
MS21083N3	96906	42	
MS21083N3	96906	62	79
MS21083N3	96906	95	107
MS21083N3	96906	95	108
MS21083N3	96906	95	110
MS21083N3	96906	95	123
MS21083N3	96906	95	13
MS21083N3	96906	95	139
MS21083N3	96906	95	140
MS21083N3	96906	95	161
MS21083N3	96906	95	163
MS21083N3	96906	95	41
MS21083N3	96906	95	44
MS21083N3	96906	95	49
MS21083N3	96906	95	52
MS21083N3	96906	95	57
MS21083N3	96906	95	7
MS21083N3	96906	95	71
MS21083N3	96906	95	75
MS21083N3	96906	95	82
MS21083N3	96906	95	83

REFERENCE NUMBER	MFG CODE	FIG NUMBER	ITEM NUMBER
MS21083N3	96906	95	85
MS21083N3	96906	95	86
MS21083N3	96906	95	88
MS21083N3	96906	95	90
MS21083N3	96906	95	91
MS21083N3	96906	95	99
MS21083N3	96906	QC1	
MS21083N3	96906	QC1	157A
MS21083N3	96906	100	15
MS21083N3	96906	100	8
MS21083N3	96906	110	36A
MS21083N3	96906	110	37A
MS21083N3	96906	110	40A
MS21083N3	96906	110	46A
MS21083N3	96906	110	54
MS21083N3	96906	110	57
MS21083N3	96906	110	63
MS21083N3	96906	110	66
MS21083N3	96906	110	74
MS21083N3	96906	110	75
MS21083N3	96906	110	7[illegible]
MS21083N3	96906	110	89
MS21083N3	96906	112	10
MS21083N3	96906	112	105
MS21083N3	96906	112	106
MS21083N3	96906	112	108
MS21083N3	96906	112	109
MS21083N3	96906	112	110
MS21083N3	96906	112	113
MS21083N3	96906	112	116
MS21083N3	96906	112	17
MS21083N3	96906	112	20
MS21083N3	96906	112	26
MS21083N3	96906	112	28
MS21083N3	96906	112	32
MS21083N3	96906	112	37
MS21083N3	96906	112	4
MS21083N3	96906	112	41
MS21083N3	96906	112	45
MS21083N3	96906	112	5
MS21083N3	96906	112	57
MS21083N3	96906	112	61
MS21083N3	96906	112	63
MS21083N3	96906	112	69
MS21083N3	96906	112	9
MS21083N3	96906	112	91
MS21083N3	96906	115	
MS21083N3	96906	116	
MS21083N3	96906	129	
MS21083N3	96906	129	23
MS21083N3	96906	129	23E
MS21083N3	96906	139	100
MS21083N3	96906	139	102
MS21083N3	96906	139	114
MS21083N3	96906	143	
MS21083N3	96906	204	6
MS21083N3	96906	206	7
MS21083N3	96906	206	9
MS21083N3	96906	208	
MS21083N3	96906	213	
MS21083N3	96906	217	
MS21083N3	96906	218	
MS21083N3	96906	219	
MS21083N3	96906	220	
MS21083N3	96906	221	
MS21083N3	96906	221	10
MS21083N3	96906	221	102
MS21083N3	96906	221	107
MS21083N3	96906	221	111
MS21083N3	96906	221	113
MS21083N3	96906	221	114

REFERENCE NUMBER	MFG CODE	FIG NUMBER	ITEM NUMBER
MS21083N3	96906	221	116
MS21083N3	96906	221	119
MS21083N3	96906	221	120
MS21083N3	96906	221	128
MS21083N3	96906	221	13
MS21083N3	96906	221	130
MS21083N3	96906	221	138
MS21083N3	96906	221	18
MS21083N3	96906	221	21
MS21083N3	96906	221	23
MS21083N3	96906	221	31
MS21083N3	96906	221	40
MS21083N3	96906	221	42
MS21083N3	96906	221	55
MS21083N3	96906	221	58
MS21083N3	96906	221	6
MS21083N3	96906	221	68
MS21083N3	96906	221	72
MS21083N3	96906	221	75
MS21083N3	96906	221	78
MS21083N3	96906	221	83
MS21083N3	96906	221	88
MS21083N3	96906	223	113
MS21083N3	96906	228	28
MS21083N3	96906	228	37
MS21083N3	96906	229	10
MS21083N3	96906	229	17
MS21083N3	96906	245	13
MS21083N3	96906	245	15
MS21083N3	96906	251	1
MS21083N3	96906	253	
MS21083N3	96906	253	1A
MS21083N3	96906	253	12
MS21083N3	96906	255	
MS21083N3	96906	256	19C
MS21083N3	96906	257	10D
MS21083N3	96906	257	22G
MS21083N3	96906	258	7A
MS21083N3	96906	275	
MS21083N3	96906	36A	11
MS21083N3	96906	36B	13
MS21083N3	96906	37B	12
MS21083N3	96906	37B	36
MS21083N3	96906	37B	43
MS21083N3	96906	KITS	
MS21083N3	96906	217A	13
MS21083N3	96906	217A	15
MS21083N3	96906	217A	23
MS21083N3	96906	217A	6
MS21083N3	96906	217A	7
MS21083N3	96906	217B	10
MS21083N3	96906	217B	16
MS21083N3	96906	217B	17
MS21083N3	96906	217B	2
MS21083N3	96906	217B	24
MS21083N3	96906	217B	27
MS21083N3	96906	217B	28
MS21083N3	96906	217B	3
MS21083N3	96906	217B	5
MS21083N3	96906	217B	6
MS21083N4	96906	15	17A
MS21083N4	96906	15	21A
MS21083N4	96906	15	27A
MS21083N4	96906	15	43
MS21083N4	96906	15	6
MS21083N4	96906	15	8B
MS21083N4	96906	18	
MS21083N4	96906	18	69
MS21083N4	96906	18	73
MS21083N4	96906	20	
MS21083N4	96906	20	25

REFERENCE NUMBER	MFG CODE	FIG NUMBER	ITEM NUMBER
MS21083N4	96906	20	34
MS21083N4	96906	20	36
MS21083N4	96906	20	44
MS21083N4	96906	20	59
MS21083N4	96906	21	82
MS21083N4	96906	21	89
MS21083N4	96906	22	25C
MS21083N4	96906	22	5C
MS21083N4	96906	25	12
MS21083N4	96906	25	16A
MS21083N4	96906	25	2A
MS21083N4	96906	25	34
MS21083N4	96906	31	25A
MS21083N4	96906	36	11A
MS21083N4	96906	36	12B
MS21083N4	96906	36	18A
MS21083N4	96906	36	9
MS21083N4	96906	62	
MS21083N4	96906	62	56
MS21083N4	96906	66	23
MS21083N4	96906	66	40
MS21083N4	96906	71	40
MS21083N4	96906	71	44
MS21083N4	96906	71	48
MS21083N4	96906	QC1	32A
MS21083N4	96906	QC1	32B
MS21083N4	96906	QC1	39
MS21083N4	96906	QC1	46
MS21083N4	96906	11A	15
MS21083N4	96906	188	
MS21083N4	96906	197	66
MS21083N4	96906	209	
MS21083N4	96906	228	42
MS21083N4	96906	257	19E
MS21083N4	96906	265	183
MS21083N4	96906	265	2
MS21083N4	96906	265	273
MS21083N4	96906	265	50
MS21083N4	96906	265	61
MS21083N4	96906	265	63
MS21083N4	96906	268	176
MS21083N4	96906	268	181
MS21083N4	96906	268	207
MS21083N4	96906	270	
MS21083N4	96906	270	30A
MS21083N4	96906	270	32A
MS21083N4	96906	273	17
MS21083N4	96906	273	2A
MS21083N4	96906	273	21
MS21083N4	96906	273	26
MS21083N4	96906	275	
MS21083N4	96906	378	19
MS21083N4	96906	378	32
MS21083N4	96906	42A	9
MS21083N4	96906	42B	30
MS21083N4	96906	42C	10
MS21083N4	96906	KITS	
MS21083N5	96906	21	61A
MS21083N5	96906	22	12B
MS21083N5	96906	22	19B
MS21083N5	96906	22	36
MS21083N5	96906	22	9B
MS21083N5	96906	25	25
MS21083N5	96906	25	29A
MS21083N5	96906	33	
MS21083N5	96906	33	10A
MS21083N5	96906	59	7
MS21083N5	96906	71	11
MS21083N5	96906	QC1	
MS21083N5	96906	QC1	2A
MS21083N5	96906	229	5

REFERENCE NUMBER	MFG CODE	FIG NUMBER	ITEM NUMBER
MS21083N5	96906	235	14
MS21083N5	96906	245	10
MS21083N5	96906	246	
MS21083N5	96906	264	10
MS21083N6	96906	11	
MS21083N6	96906	15	8A
MS21083N6	96906	43	13
MS21083N6	96906	44	
MS21083N6	96906	44	25B
MS21083N6	96906	45	12B
MS21083N6	96906	45	8
MS21083N6	96906	49	47
MS21083N6	96906	62	69
MS21083N6	96906	QC1	78
MS21083N6	96906	100	12
MS21083N6	96906	196	
MS21083N6	96906	207	
MS21083N6	96906	238	14
MS21083N6	96906	238	56
MS21083N6	96906	238	58
MS21083N6	96906	256	1
MS21083N6	96906	256	16
MS21083N6	96906	263	2
MS21083N6	96906	273	14
MS21083N6	96906	42A	6
MS21083N6	96906	42B	28
MS21083N6	96906	42C	7
MS21083N7	96906	KITS	
MS21083N7	96906	60	42
MS21083N7	96906	61	44
MS21083N8	96906	BULK	
MS21083N8	96906	11	41
MS21083N8	96906	11	91
MS21083N8	96906	11B	35
MS21083N8	96906	238	61
MS21083N8	96906	240	101
MS21083N8	96906	252	2
MS21083N8	96906	264	13A
MS21083N8	96906	270	13A
MS21083N8	96906	270	20A
MS21083N8	96906	270	23A
MS21088L4-8-72	96906	270	41
MS21092D6	96906	BULK	
MS21104C16	96906	QC1	133
MS21104C16	96906	218	73D
MS21104C16	96906	218	73E
MS21104C16	96906	218	75A
MS21104C16	96906	219A	178
MS21104C16	96906	219A	73
MS21104C16	96906	219A	83
MS21208C0610	96906	265	95
MS21208C0610	96906	268	33
MS21208C4-10	96906	BULK	
MS21208F1-10	96906	134	77
MS21208F1-10	96906	203	28A
MS21208F1-15	96906	134	47
MS21208F1-20	96906	134	75
MS21208F4-10	96906	BULK	
MS21208F4-20	96906	134	46
MS21209F1-15	96906	59	47
MS21209F1-15	96906	63	5
MS21209F1-15	96906	183	2B
MS21209F1-15	96906	265	279
MS21209F1-15	96906	268	242
MS21209F1-20		KITS	
MS21209F1-20	96906	51	
MS21209F1-20	96906	63	4
MS21209F1-20	96906	63	62
MS21209F1-20	96906	63	85
MS21209F1-20	96906	267	24
MS21209F4-15	96906	212	30

REFERENCE NUMBER	MFG CODE	FIG NUMBER	ITEM NUMBER
MS21209F4-20	96906	63	63
MS21209F4-20	96906	138	25
MS21209F4-20	96906	138	26
MS21209F4-20	96906	149	34
MS21209F4-20	96906	274	33
MS21209F4-20	96906	149	35
MS21209F5-20	96906	274	32
MS21209F5-20	96906	223	84
MS21224-3	96906	66	13
MS21224-4	96906	66	2
MS21224-4	96906	222	14
MS21224-4	96906	222	19B
MS21224-4	96906	223	136
MS21224-4	96906	223	15
MS21224-4	96906	223	2
MS21224-4	96906	223	22
MS21224-4	96906	223	30
MS21224-4	96906	223	9
MS21224-4	96906	228	129B
MS21224-5	96906	223	147
MS21224-5	96906	223	189
MS21224-5	96906	223	204
MS21224-5	96906	223	75
MS21224-5	96906	242	5
MS21224-5	96906	242	6
MS21224-5	96906	243	4B
MS21224-6	96906	75	63
MS21224-6	96906	223	54
MS21224-6	96906	242	8
MS21224-6	96906	243	9B
MS21224-7	96906	243	15B
MS21224-7	96906	243	22B
MS21231-4	96906	190A	25
MS21231-4	96906	190A	41
MS21233-10	96906	21	
MS21233-10	96906	240	81
MS21233-4	96906	239	
MS21233-5	96906	239	
MS21233-8	96906	238	41
MS2124736	96906	67	23
MS21251-3S	96906	22	
MS21251-9L	96906	34	40
MS21251B3S	96906	22	
MS2125189L	96906	34	40
MS21252-5RL	96906	207	
MS21252-5RL	96906	207	17
MS21252-5RL	96906	208	21
MS21254-9LL	96906	34	35
MS21256-1	96906	22	
MS21256-2	96906	BULK	
MS21260S3LH	96906	22	
MS21260S3RH	96906	21	
MS21266-1N	96906	BULK	
MS21318-1		KITS	
MS21318-1	96906	52	22
MS21318-1	96906	122	2
MS21318-1	96906	124	2
MS21318-1	96906	125	50
MS21318-1	96906	133	1
MS21318-1	96906	144	6
MS21318-1	96906	145	2
MS21318-1	96906	148	1
MS21318-1	96906	150	22
MS21318-1	96906	153	24
MS21318-1	96906	212	27
MS21318-1	96906	215	17
MS21318-1	96906	215	19
MS21318-1	96906	247	27
MS21318-13	96906	113	
MS21318-15	96906	BULK	
MS21318-19	96906	73	15
MS21318-19	96906	73	17
MS21318-20	96906	BULK	
MS21318-3	96906	209	
MS21318-3	96906	277	
MS21318-3	96906	KITS	
MS21318-7	96906	63	89
MS21318-7	96906	65	54
MS21318-7	96906	65	94
MS21318-7	96906	102	36
MS21318-7	96906	103	29
MS21318-7	96906	138	28
MS21318-7	96906	138	30
MS21318-7	96906	138	32
MS21318-7	96906	149	66
MS21318-7	96906	149	68
MS21318-7	96906	154	42
MS21318-7	96906	154	44
MS21318-7	96906	184	1
MS21318-7	96906	265	150
MS21318-7	96906	265	269
MS21318-7	96906	266	17
MS21318-7	96906	266	19
MS21318-7	96906	267	26
MS21318-7	96906	267	28
MS21318-7	96906	267	30
MS21318-7	96906	268	152
MS21318-7	96906	268	234
MS21318-7	96906	274	34
MS21318-7	96906	274	36
MS21318-7	96906	274	38
MS21318-8		KITS	
MS21318-8	96906	57	20
MS21318-8	96906	58	18
MS21318-8	96906	94	19
MS21318-8	96906	230	2
MS21318-8	96906	231	64
MS2183D3	96906	18	
MS21900-4	96906	93	16
MS21900D4	96906	135	8
MS21900D4	96906	180	30
MS21900D4	96906	KITS	
MS21902-10	96906	129	7A
MS21902-10C	96906	129	7A
MS21902-10C	96906	KITS	
MS21902-4	96906	KITS	
MS21902-4C	96906	115	53
MS21902-4C	96906	117	
MS21902-4C	96906	117	10B
MS21902-4C	96906	117	3B
MS21902-4C	96906	119	
MS21902-4C	96906	119	189
MS21902-4C	96906	119	193
MS21902-4C	96906	119	195
MS21902-4C	96906	119	199
MS21902-8	96906	117	
MS21902D10	96906	117	
MS21902D10	96906	119	258
MS21902D10	96906	129	
MS21902D10	96906	KITS	
MS21902D12	96906	95	48
MS21902D12	96906	95	55
MS21902D12	96906	95	80
MS21902D12	96906	95	92
MS21902D12	96906	QC1	178
MS21902D12	96906	129	102B
MS21902D12	96906	129	107A
MS21902D12	96906	129	73A
MS21902D12	96906	139	49
MS21902D16	96906	95	106
MS21902D16	96906	95	47
MS21902D16	96906	95	56

REFERENCE NUMBER	MFG CODE	FIG NUMBER	ITEM NUMBER
MS21902D16	96906	95	70
MS21902D16	96906	95	81
MS21902D16	96906	QC1	176
MS21902D16	96906	117	73H
MS21902D16	96906	129	
MS21902D16	96906	129	16A
MS21902D16	96906	129	18
MS21902D16	96906	KITS	
MS21902D20	96906	95	19
MS21902D20	96906	95	29
MS21902D20	96906	95	33
MS21902D20	96906	95	34
MS21902D4	96906	76	144
MS21902D4	96906	93	18
MS21902D4	96906	93	25
MS21902D4	96906	109	58D
MS21902D4	96906	110	
MS21902D4	96906	110	14
MS21902D4	96906	110	42
MS21902D4	96906	110	69
MS21902D4	96906	110	91
MS21902D4	96906	112	12
MS21902D4	96906	112	122
MS21902D4	96906	112	143
MS21902D4	96906	112	87
MS21902D4	96906	112	90
MS21902D4	96906	115	24
MS21902D4	96906	115	29
MS21902D4	96906	115	32
MS21902D4	96906	115	36
MS21902D4	96906	115	39
MS21902D4	96906	115	5
MS21902D4	96906	116	
MS21902D4	96906	117	
MS21902D4	96906	117	198
MS21902D4	96906	117	71A
MS21902D4	96906	119	
MS21902D4	96906	119	130
MS21902D4	96906	119	141
MS21902D4	96906	119	160
MS21902D4	96906	119	180
MS21902D4	96906	119	274
MS21902D4	96906	119	293
MS21902D4	96906	119	76
MS21902D4	96906	129	
MS21902D4	96906	129	138
MS21902D4	96906	129	149
MS21902D4	96906	129	55A
MS21902D4	96906	129	83
MS21902D4	96906	129	85A
MS21902D4	96906	148	4
MS21902D4	96906	178	58
MS21902D4	96906	179	21
MS21902D4	96906	179	6
MS21902D4	96906	180	10
MS21902D4	96906	180	5
MS21902D4	96906	257	12
MS21902D4	96906	257	21
MS21902D4	96906	KITS	
MS21902D5	96906	BULK	
MS21902D6	96906	QC1	132
MS21902D6	96906	109	
MS21902D6	96906	109	22
MS21902D6	96906	109	25
MS21902D6	96906	109	62A
MS21902D6	96906	109	64
MS21902D6	96906	109	77D
MS21902D6	96906	109	88
MS21902D6	96906	112	11
MS21902D6	96906	112	19
MS21902D6	96906	112	30

REFERENCE NUMBER	MFG CODE	FIG NUMBER	ITEM NUMBER
MS21902D6	96906	112	42
MS21902D6	96906	112	52
MS21902D6	96906	116	
MS21902D6	96906	117	
MS21902D6	96906	117	105
MS21902D6	96906	117	58C
MS21902D6	96906	119	234
MS21902D6	96906	119	245
MS21902D6	96906	129	
MS21902D6	96906	129	74A
MS21902D6	96906	129	75A
MS21902D6	96906	139	101
MS21902D6	96906	139	41A
MS21902D6	96906	139	91
MS21902D6	96906	139	93
MS21902D6	96906	143	
MS21902D6	96906	178	139
MS21902D6	96906	178	75
MS21902D6	96906	221	37
MS21902D6	96906	251	18A
MS21902D8	96906	KITS	
MS21902D8	96906	95	165
MS21902D8	96906	95	169
MS21902D8	96906	117	77A
MS21902D8	96906	117	81
MS21902D8	96906	119	311
MS21902D8	96906	119	349
MS21902D8	96906	119	382
MS21902D8	96906	129	
MS21902D8	96906	129	106
MS21902D8	96906	129	11
MS21902D8	96906	139	79
MS21902D8	96906	KITS	
MS21905-10C	96906	129	7E
MS21905-4	96906	BULK	
MS21905D16	96906	129	21A
MS21905D4	96906	112	100
MS21905D4	96906	112	103
MS21905D4	96906	112	111
MS21905D4	96906	112	117
MS21905D4	96906	112	66
MS21905D4	96906	112	92
MS21905D4	96906	119	105
MS21905D4	96906	119	112
MS21905D4	96906	119	151
MS21905D4	96906	119	84
MS21905D4	96906	119	9
MS21905D4	96906	178	31
MS21905D4	96906	179	18
MS21905D4	96906	179	3
MS21905D4	96906	KITS	
MS21905D6	96906	109	80
MS21905D6	96906	116	
MS21905D6	96906	117	102
MS21905D6	96906	117	107
MS21905D6	96906	117	57A
MS21905D6	96906	178	30
MS21905D8	96906	BULK	
MS21906D4	96906	119	371
MS21906D6	96906	BULK	
MS21907-10	96906	129	1A
MS21907-12C	96906	129	65A
MS21907-4C	96906	119	
MS21907-4C	96906	119	185
MS21907-4C	96906	119	208
MS21907-8	96906	QC1	81
MS21907-8	96906	143	2
MS21907D10	96906	119	256
MS21907D12	96906	95	105
MS21907D12	96906	129	98
MS21907D12	96906	139	51

REFERENCE NUMBER	MFG CODE	FIG NUMBER	ITEM NUMBER
MS21907D12	96906	139	97
MS21907D16	96906	95	94
MS21907D16	96906	129	18A
MS21907D16	96906	129	78A
MS21907D20	96906	95	133
MS21907D20	96906	BULK	
MS21907D4	96906	109	1
MS21907D4	96906	110	51
MS21907D4	96906	117	28B
MS21907D4	96906	119	219
MS21907D4	96906	119	89
MS21907D4	96906	129	
MS21907D4	96906	129	61A
MS21907D4	96906	139	6
MS21907D6	96906	109	55
MS21907D6	96906	109	70
MS21907D6	96906	112	35
MS21907D6	96906	112	48
MS21907D6	96906	117	
MS21907D6	96906	119	237
MS21907D6	96906	129	111A
MS21907D6	96906	139	13
MS21907D8	96906	117	73A
MS21907D8	96906	117	87
MS21907D8	96906	129	
MS21907D8	96906	129	112A
MS21907D8	96906	129	97
MS21907D8	96906	139	31
MS21908-10	96906	119	335
MS21908-10	96906	129	10A
MS21908-10	96906	129	75B
MS21908-4	96906	115	46
MS21908-4C	96906	117	2B
MS21908-4C	96906	117	6A
MS21908-4C	96906	119	
MS21908-4C	96906	119	184
MS21908-4C	96906	119	201
MS21908-6	96906	119	313
MS21908-6	96906	119	324
MS21908-8	96906	119	266
MS21908-8	96906	119	339
MS21908D10	96906	KITS	
MS21908D12	96906	95	97
MS21908D12	96906	129	2A
MS21908D12	96906	129	72A
MS21908D12	96906	139	52
MS21908D16	96906	95	93
MS21908D16	96906	95	98
MS21908D16	96906	129	109A
MS21908D16	96906	129	15A
MS21908D20	96906	95	124
MS21908D20	96906	95	137
MS21908D20	96906	95	141
MS21908D20	96906	95	2
MS21908D20	96906	95	34
MS21908D20	96906	95	4
MS21908D4	96906	95	160
MS21908D4	96906	109	1
MS21908D4	96906	109	42
MS21908D4	96906	109	60
MS21908D4	96906	110	20
MS21908D4	96906	110	25
MS21908D4	96906	110	30
MS21908D4	96906	110	38
MS21908D4	96906	110	42
MS21908D4	96906	110	47
MS21908D4	96906	110	7
MS21908D4	96906	110	85
MS21908D4	96906	112	123
MS21908D4	96906	112	137
MS21908D4	96906	112	147
MS21908D4	96906	112	149
MS21908D4	96906	112	151
MS21908D4	96906	112	155
MS21908D4	96906	112	165
MS21908D4	96906	112	169
MS21908D4	96906	112	6
MS21908D4	96906	112	64
MS21908D4	96906	112	71
MS21908D4	96906	112	95
MS21908D4	96906	115	
MS21908D4	96906	115	3
MS21908D4	96906	116	
MS21908D4	96906	117	
MS21908D4	96906	117	25A
MS21908D4	96906	117	75
MS21908D4	96906	117	95F
MS21908D4	96906	119	
MS21908D4	96906	119	129
MS21908D4	96906	119	139
MS21908D4	96906	119	148
MS21908D4	96906	119	162
MS21908D4	96906	119	172
MS21908D4	96906	119	208
MS21908D4	96906	119	214
MS21908D4	96906	119	25
MS21908D4	96906	119	250
MS21908D4	96906	119	344
MS21908D4	96906	119	363
MS21908D4	96906	119	80
MS21908D4	96906	119	97
MS21908D4	96906	129	140
MS21908D4	96906	129	25A
MS21908D4	96906	129	35B
MS21908D4	96906	129	52A
MS21908D4	96906	135	6
MS21908D4	96906	139	2
MS21908D4	96906	139	61
MS21908D4	96906	178	61
MS21908D4	96906	257	9
MS21908D4	96906	KITS	
MS21908D6	96906	109	14
MS21908D6	96906	109	3
MS21908D6	96906	109	38
MS21908D6	96906	109	40
MS21908D6	96906	109	53
MS21908D6	96906	109	8
MS21908D6	96906	110	80
MS21908D6	96906	112	1
MS21908D6	96906	112	22
MS21908D6	96906	112	38
MS21908D6	96906	116	
MS21908D6	96906	117	58E
MS21908D6	96906	117	95A
MS21908D6	96906	117	98
MS21908D6	96906	119	237
MS21908D6	96906	119	242
MS21908D6	96906	119	304
MS21908D6	96906	129	
MS21908D6	96906	129	109B
MS21908D6	96906	129	44A
MS21908D6	96906	129	67B
MS21908D6	96906	139	105
MS21908D6	96906	139	15
MS21908D6	96906	139	27
MS21908D6	96906	139	4
MS21908D6	96906	139	45
MS21908D6	96906	139	47
MS21908D6	96906	139	57
MS21908D6	96906	139	95
MS21908D6	96906	178	129
MS21908D6	96906	178	78

REFERENCE NUMBER	MFG CODE	FIG NUMBER	ITEM NUMBER
MS21908D8	96906	95	172
MS21908D8	96906	109	48
MS21908D8	96906	117	79
MS21908D8	96906	129	144
MS21909-4	96906	44	29
MS21909-4	96906	KITS	
MS21909-4C	96906	115	50
MS21909-4C	96906	117	4A
MS21909-4C	96906	119	197
MS21909-6	96906	251	37
MS21909D4	96906	112	129
MS21909D4	96906	112	133
MS21909D4	96906	112	141
MS21909D4	96906	112	159
MS21909D4	96906	112	167
MS21909D4	96906	119	102
MS21909D4	96906	119	13
MS21909D4	96906	119	27
MS21909D4	96906	119	39
MS21909D4	96906	119	68
MS21909D4	96906	129	95B
MS21909D4	96906	KITS	
MS21909D6	96906	112	44
MS21909D6	96906	116	
MS21909D6	96906	139	99
MS21909D8	96906	BULK	
MS21910-10	96906	QC1	87
MS21910-10	96906	119	332
MS21910-10	96906	143	7
MS21910-10C	96906	143	7
MS21910-12C	96906	119	388
MS21910-4C	96906	BULK	
MS21910-8	96906	BULK	
MS21910D10	96906	KITS	
MS21910D12	96906	95	58
MS21910D12	96906	129	88A
MS21910D16	96906	129	
MS21910D16	96906	129	16A
MS21910D16	96906	129	19A
MS21910D16	96906	129	45A
MS21910D4	96906	119	108
MS21910D4	96906	119	121
MS21910D4	96906	119	36
MS21910D4	96906	119	58
MS21910D4	96906	129	84A
MS21910D4	96906	KITS	
MS21910D6	96906	109	18
MS21910D6	96906	109	23
MS21910D6	96906	109	29
MS21910D6	96906	109	35
MS21910D6	96906	109	50
MS21910D6	96906	110	34
MS21910D6	96906	110	78
MS21910D6	96906	112	18
MS21910D6	96906	117	19M
MS21910D6	96906	117	65
MS21910D6	96906	119	232
MS21910D6	96906	129	85B
MS21910D6	96906	129	90A
MS21910D6	96906	139	23
MS21910D6	96906	139	72
MS21910D6	96906	178	132
MS21910D8	96906	KITS	
MS21910D8	96906	109	16
MS21910D8	96906	109	46
MS21910D8	96906	129	119
MS21910D8	96906	129	39
MS21910D8	96906	129	49
MS21910D8	96906	139	25
MS21910D8	96906	139	76
MS21911-10	96906	129	5A
MS21911-10	96906	129	77
MS21911D12	96906	129	46A
MS21911D12	96906	139	98
MS21911D16	96906	129	
MS21911D16	96906	129	27A
MS21911D4	96906	109	10
MS21911D4	96906	119	127
MS21911D4	96906	119	222
MS21911D4	96906	119	229
MS21911D4	96906	119	290
MS21911D4	96906	119	368
MS21911D4	96906	119	6
MS21911D4	96906	129	53
MS21911D4	96906	129	95G
MS21911D6	96906	109	27
MS21911D6	96906	112	29
MS21911D6	96906	117	50
MS21911D6	96906	117	94
MS21911D6	96906	119	282
MS21911D6	96906	119	309
MS21911D6	96906	119	311
MS21911D6	96906	129	68A
MS21911D8	96906	117	43A
MS21911D8	96906	129	40A
MS21912-10	96906	129	
MS21912-12S	96906	129	66A
MS21912-4	96906	44	28
MS21912-4	96906	115	45
MS21912-4C	96906	117	2A
MS21912-6	96906	BULK	
MS21912D10	96906	129	
MS21912D16	96906	129	79A
MS21912D4	96906	109	57
MS21912D4	96906	112	125
MS21912D4	96906	112	135
MS21912D4	96906	112	143
MS21912D4	96906	112	67
MS21912D4	96906	112	97
MS21912D4	96906	115	15
MS21912D4	96906	115	26
MS21912D4	96906	115	34
MS21912D4	96906	117	
MS21912D4	96906	119	117
MS21912D4	96906	119	12
MS21912D4	96906	119	128
MS21912D4	96906	119	136
MS21912D4	96906	119	175
MS21912D4	96906	119	26
MS21912D4	96906	119	276
MS21912D4	96906	119	40
MS21912D4	96906	119	71
MS21912D4	96906	129	81A
MS21912D4	96906	129	82A
MS21912D4	96906	129	95D
MS21912D4	96906	180	15
MS21912D4	96906	257	18
MS21912D4	96906	KITS	
MS21912D6	96906	109	20
MS21912D6	96906	109	71
MS21912D6	96906	109	74
MS21912D6	96906	110	64
MS21912D6	96906	112	14
MS21912D6	96906	112	33
MS21912D6	96906	117	58A
MS21912D6	96906	117	91
MS21912D6	96906	117	94
MS21912D6	96906	129	
MS21912D6	96906	129	37
MS21912D6	96906	129	70B
MS21912D6	96906	139	111
MS21912D8	96906	95	168

REFERENCE NUMBER	MFG CODE	FIG NUMBER	ITEM NUMBER
MS21913-16	96906	BULK	
MS21913D12	96906	BULK	
MS21913D4	96906	119	
MS21913D4	96906	129	
MS21913D5	96906	BULK	
MS21914-16	96906	BULK	
MS21914-3D	96906	BULK	
MS21914-4	96906	44	27
MS21914-4	96906	117	
MS21914-4	96906	KITS	
MS21914-4C	96906	117	2A
MS21914-4D	96906	119	
MS21914-4D	96906	119	10
MS21914-4D	96906	119	8
MS21914-4D	96906	119	85
MS21914-4D	96906	129	32
MS21914-4D	96906	178	33
MS21914-4D	96906	179	
MS21914-4D	96906	179	18A
MS21914-4D	96906	179	3A
MS21914-6D	96906	178	32
MS21914-8D	96906	BULK	
MS21914D6	96906	139	99
MS21915-12-10C	96906	129	65A
MS21915-12-10C	96906	129	66A
MS21915D10-8	96906	129	1A
MS21915D10-8	96906	129	10A
MS21915D16-12	96906	129	78A
MS21915D6-4	96906	109	29
MS21915D6-4	96906	115	
MS21915D6-4	96906	116	
MS21915D6-4	96906	119	229
MS21915D6-4	96906	129	
MS21915D6-4	96906	139	16
MS21915D6-4	96906	139	67
MS21916-10-6	96906	119	332
MS21916-12-10C	96906	129	
MS21916-12-10C	96906	129	67A
MS21916-12-4C	96906	119	388
MS21916-12-8C	96906	BULK	
MS21916-16-4	96906	BULK	
MS21916-6-4	96906	139	118
MS21916DG6-4	96906	95	154
MS21916D10-4	96906	95	79
MS21916D10-4	96906	139	33
MS21916D10-4	96906	139	81
MS21916D10-6	96906	QC1	96
MS21916D10-6	96906	143	11
MS21916D10-8	96906	119	254
MS21916D10-8	96906	119	391
MS21916D10-8	96906	KITS	
MS21916D12-10	96906	129	66A
MS21916D12-10	96906	BULK	
MS21916D12-4	96906	95	58
MS21916D12-6	96906	129	44
MS21916D12-6	96906	129	46C
MS21916D12-6	96906	KITS	
MS21916D12-8	96906	129	46A
MS21916D12-8	96906	KITS	
MS21916D16-10	96906	129	27A
MS21916D16-12	96906	95	64
MS21916D16-12	96906	95	76
MS21916D16-12	96906	129	17
MS21916D16-12	96906	129	18
MS21916D16-12	96906	129	45A
MS21916D16-12	96906	129	88A
MS21916D16-12	96906	139	98
MS21916D16-12	96906	KITS	
MS21916D16-4	96906	129	
MS21916D16-4	96906	129	18
MS21916D16-4	96906	129	19A
MS21916D16-4	96906	KITS	
MS21916D4-3	96906	109	43
MS21916D4-3	96906	109	5
MS21916D4-3	96906	112	127
MS21916D4-3	96906	112	131
MS21916D4-3	96906	112	139
MS21916D4-3	96906	112	145
MS21916D4-3	96906	112	157
MS21916D4-3	96906	112	163
MS21916D4-3	96906	119	
MS21916D4-3	96906	139	
MS21916D4-3	96906	139	21
MS21916D4-3	96906	139	70
MS21916D4-3	96906	109	
MS21916D6-4	96906	109	12A
MS21916D6-4	96906	109	27
MS21916D6-4	96906	109	61D
MS21916D6-4	96906	110	33
MS21916D6-4	96906	110	34
MS21916D6-4	96906	110	35
MS21916D6-4	96906	110	78
MS21916D6-4	96906	112	24
MS21916D6-4	96906	112	29
MS21916D6-4	96906	116	
MS21916D6-4	96906	117	19M
MS21916D6-4	96906	117	50
MS21916D6-4	96906	119	19
MS21916D6-4	96906	119	223
MS21916D6-4	96906	119	302
MS21916D6-4	96906	119	309
MS21916D6-4	96906	119	311
MS21916D6-4	96906	119	356
MS21916D6-4	96906	129	70A
MS21916D6-4	96906	129	84A
MS21916D6-4	96906	129	85B
MS21916D6-4	96906	139	23
MS21916D6-4	96906	139	72
MS21916D6-4	96906	220	
MS21916D6-4	96906	KITS	
MS21916D8-4	96906	95	143
MS21916D8-4	96906	95	8
MS21916D8-4	96906	109	
MS21916D8-4	96906	119	217
MS21916D8-4	96906	119	311
MS21916D8-4	96906	119	349
MS21916D8-4	96906	119	352
MS21916D8-4	96906	129	40A
MS21916D8-4	96906	139	25
MS21916D8-4	96906	139	76
MS21916D8-4	96906	KITS	
MS21916D8-6	96906	109	
MS21916D8-6	96906	109	29
MS21916D8-6	96906	117	
MS21916D8-6	96906	119	311
MS21916D8-6	96906	119	349
MS21916D8-6	96906	129	110A
MS21916D8-6	96906	129	117
MS21916D8-6	96906	129	39
MS21916D8-6	96906	KITS	
MS21919DG17	96906	95	49
MS21919DG17	96906	95	52
MS21919DG17	96906	95	65
MS21919DG17	96906	95	71
MS21919DG17	96906	95	82
MS21919DG17	96906	95	89
MS21919DG17	96906	95	90
MS21919DG17	96906	95	91
MS21919DG24	96906	BULK	
MS21919DG28	96906	BULK	
MS21919DG8	96906	81	8B
MS21919F16	96906	218	73C

REFERENCE NUMBER	MFG CODE	FIG NUMBER	ITEM NUMBER
MS21919F20	96906	BULK	
MS21919F20	96906	219A	94
MS21919F28	96906	218	75
MS21919H15	96906	217A	14
MS21919H15	96906	217A	15
MS21919H15	96906	217B	17
MS21919H20	96906	217B	23
MS21919H20	96906	217B	24
MS21919H20	96906	217B	28
MS21919H20	96906	217B	6
MS21919WDF16	96906	219A	186
MS21919WDF16	96906	219A	86
MS21919WDF2	96906	219A	187
MS21919WDF2	96906	219A	92
MS21919WDF9	96906	219A	87
MS21919WDG11	96906	BULK	
MS21919WDG13	96906	BULK	
MS21919WDG14	96906	BULK	
MS21919WDG17	96906	BULK	
MS21919WDG2	96906	BULK	
MS21919WDG23	96906	BULK	
MS21919WDG3	96906	BULK	
MS21919WDG6	96906	219A	89
MS21919WG6	96906	BULK	
MS21920-26	96906	119	394
MS21920-45R	96906	251	23
MS21920-57R	96906	273	8
MS21920-59R	96906	BULK	
MS21921-10D	96906	BULK	
MS21921-12D	96906	BULK	
MS21921-16D	96906	BULK	
MS21921-20D	96906	BULK	
MS21921-4	96906	BULK	
MS21921-4D	81349	BULK	
MS21921-6	96906	BULK	
MS21921-6D	96906	BULK	
MS21921-8	96906	BULK	
MS21921-8D	96906	BULK	
MS21921D4	96906	BULK	
MS21922-10	96906	BULK	
MS21922-12	96906	BULK	
MS21922-16	96906	BULK	
MS21922-20	96906	BULK	
MS21922-4	96906	BULK	
MS21922-5	96906	BULK	
MS21922-6	96906	BULK	
MS21922-8	96906	BULK	
MS21923-4	96906	93	23
MS21924-10	96906	129	
MS21924-10	96906	129	56A
MS21924-10C	96906	129	9
MS21924-4C	96906	115	17
MS21924-4C	96906	115	41
MS21924-4C	96906	117	13A
MS21924-8	96906	117	
MS21924-8	96906	119	264
MS21924D10	96906	117	
MS21924D10	96906	119	260
MS21924D10	96906	139	33
MS21924D10	96906	139	81
MS21924D10	96906	BULK	
MS21924D10	96906	KITS	
MS21924D12	96906	95	51
MS21924D12	96906	129	46C
MS21924D12	96906	129	71A
MS21924D16	96906	95	50
MS21924D16	96906	KITS	
MS21924D20	96906	95	125
MS21924D20	96906	95	5
MS21924D4	96906	95	155
MS21924D4	96906	95	157
MS21924D4	96906	109	32
MS21924D4	96906	110	
MS21924D4	96906	110	39
MS21924D4	96906	110	68
MS21924D4	96906	110	82
MS21924D4	96906	115	
MS21924D4	96906	115	1
MS21924D4	96906	115	10
MS21924D4	96906	115	11
MS21924D4	96906	115	13
MS21924D4	96906	115	19
MS21924D4	96906	115	22
MS21924D4	96906	115	8
MS21924D4	96906	117	
MS21924D4	96906	117	19I
MS21924D4	96906	117	83
MS21924D4	96906	119	
MS21924D4	96906	119	120
MS21924D4	96906	119	143
MS21924D4	96906	119	212
MS21924D4	96906	119	247
MS21924D4	96906	119	396
MS21924D4	96906	119	88
MS21924D4	96906	129	
MS21924D4	96906	129	35A
MS21924D4	96906	129	41A
MS21924D4	96906	139	63
MS21924D4	96906	178	39
MS21924D4	96906	180	20
MS21924D4	96906	180	25
MS21924D4	96906	257	16
MS21924D4	96906	257	5
MS21924D4	96906	257	7
MS21924D4	96906	KITS	
MS21924D6	96906	QC1	124
MS21924D6	96906	QC1	127
MS21924D6	96906	QC1	135
MS21924D6	96906	QC1	93
MS21924D6	96906	109	70
MS21924D6	96906	109	73
MS21924D6	96906	109	86
MS21924D6	96906	110	35
MS21924D6	96906	110	84
MS21924D6	96906	112	15
MS21924D6	96906	112	62
MS21924D6	96906	115	55
MS21924D6	96906	115	57
MS21924D6	96906	117	
MS21924D6	96906	117	100
MS21924D6	96906	117	19D
MS21924D6	96906	119	239
MS21924D6	96906	129	41C
MS21924D6	96906	129	70A
MS21924D6	96906	139	
MS21924D6	96906	139	108
MS21924D6	96906	139	18
MS21924D6	96906	139	28
MS21924D6	96906	139	43
MS21924D6	96906	139	59
MS21924D6	96906	139	67
MS21924D6	96906	139	74
MS21924D6	96906	139	8
MS21924D6	96906	143	31
MS21924D6	96906	178	135
MS21924D6	96906	178	36
MS21924D6	96906	221	63
MS21924D8	96906	117	86
MS21924D8	96906	129	102A
MS21926-4D	96906	146	6A
MS21937-4H	96906	62	60A
MS21937-4H	96906	QC1	68

REFERENCE NUMBER	MFG CODE	FIG NUMBER	ITEM NUMBER
MS21937-4H	96906	217	17
MS21937-4H	96906	217A	3
MS21937-4H	96906	217B	7
MS21937-4L	96906	112	143
MS21937-4L	96906	112	153
MS21937-4L	96906	112	161
MS21937-4L	96906	112	82
MS21937-4L	96906	119	62
MS21937-4L	96906	178	7
MS21937-4L	96906	KITS	
MS21937-4L	96906	217B	30
MS21937-6H	96906	117	69
MS21937-6H	96906	119	299
MS21937-6H	96906	129	129
MS21937-6H	96906	KITS	
MS21937-8H	96906	117	89
MS21937-8H	96906	129	124
MS21938-4L	96906	112	143
MS21938-4L	96906	112	153
MS21938-4L	96906	112	161
MS21938-4L	96906	112	81
MS21938-4L	96906	119	62
MS21938-4L	96906	KITS	
MS21938-6H	96906	BULK	
MS21938-8H	96906	117	69C
MS21938-8H	96906	119	297
MS21938-8H	96906	129	132
MS21938-8H	96906	KITS	
MS21939-6H8	96906	117	89
MS21939-6H8	96906	129	124
MS21939-6H8	96906	KITS	
MS21942-8H	96906	117	89
MS21943-4L	96906	BULK	
MS21944-8H	96906	129	124
MS21945-4L	96906	112	153
MS21945-4L	96906	112	161
MS21945-4L	96906	119	62
MS21945-4L	96906	KITS	
MS21945-6H	96906	117	69A
MS21945-6H	96906	129	130
MS21950-4L4	96906	178	5
MS21950-4L4	96906	217B	30
MS21950-5L4	96906	178	5
MS21952-10H4	96906	62	60B
MS21952-10H4	96906	QC1	67
MS21952-10H4	96906	217	16
MS21952-10H4	96906	217A	3
MS21952-10H4	96906	217B	7
MS21953-8H	96906	62	60D
MS21953-8H	96906	QC1	71
MS21953-8H	96906	217	20
MS21953-8H	96906	217A	3
MS21953-8H	96906	217B	7
MS21954-4L	96906	178	2
MS21954-4L	96906	217B	30
MS21955-4H	96906	62	60C
MS21955-4H	96906	QC1	69
MS21955-4H	96906	217	18
MS21955-4H	96906	217A	3
MS21955-4H	96906	217B	7
MS21955-4H	96906	112	80
MS21959-4L	96906	119	301
MS21959-6H	96906	KITS	
MS21959-6H	96906	112	143
MS21960-4L	96906	BULK	
MS21981-080	96906	BULK	
MS21981-22	96906	95	130
MS219924D20	96906	42	11
MS22025-1	96906	198	21
MS24143D2	96906	182	29
MS24149D1	96906	188	37
MS24149D1	96906	188	41
MS24149D1	96906	188	50
MS24149D1	96906	188	7
MS24149D1	96906	191	38
MS24149D1	96906	191	5
MS24149D1	96906	195	37
MS24149D1	96906	196	
MS24149D1	96906	204	
MS24149D1	96906	204	18
MS24149D1	96906	204	5
MS24149D1	96906	209	35
MS24149D1	96906	277	13
MS24149D1	96906	277	14
MS24171D1	96906	208	23
MS24183D1	96906	207	25
MS24183D1	96906	208	23
MS24187D1	96906	207	26
MS24187D1	96906	208	26
MS24253-22	96906	33	34B
MS24254-12P	96906	BULK	
MS24254-16P	96906	BULK	
MS24254-20P	96906	BULK	
MS24255-12S	96906	BULK	
MS24255-16S	96906	BULK	
MS24255-20S	96906	BULK	
MS24331-1	96906	76	115
MS24331-1	96906	270	16A
MS24331-1	96906	270	62
MS24335-12	96906	129	2
MS24335-12	96906	129	98
MS24335-8	96906	129	1
MS24335-8	96906	129	97
MS24367-715AS15	96906	176	10
MS24367-715AS15	96906	177	9
MS24388D16	96906	213	
MS24388D16	96906	213	22
MS24388D16	96906	213	31
MS24388D6	96906	213	
MS24388D6	96906	220	29
MS24389D16	96906	213	20
MS24389D16	96906	213	28
MS24390D4	96906	BULK	
MS24390D8	96906	BULK	
MS24391-2L	96906	71	93
MS24391D2L	96906	71	30
MS24391D2L	96906	71	55
MS24391D2L	96906	71	83
MS24391D2L	96906	102	22
MS24391D2L	96906	103	20
MS24391D2L	96906	126	13
MS24391D2L	96906	128	12
MS24391D2L	96906	133	61
MS24391D2L	96906	148	2
MS24391D2L	96906	228	141
MS24391D4L	96906	63	91
MS24391D4L	96906	72	23
MS24391D4L	96906	72	54
MS24391D4L	96906	73	13
MS24391D4L	96906	81	116
MS24391D4L	96906	87	19
MS24391D4L	96906	119	
MS24391D4L	96906	119	37
MS24391D4L	96906	119	81
MS24391D4L	96906	129	
MS24391D4L	96906	134	81
MS24391D4L	96906	213	
MS24391D4L	96906	220	
MS24391D4L	96906	221	30
MS24391D4L	96906	221	70
MS24391D4L	96906	265	106
MS24391D4L	96906	268	121

REFERENCE NUMBER	MFG CODE	FIG NUMBER	ITEM NUMBER
MS24391D4L	96906	273	18A
MS24391D5L	96906	54	10
MS24391D5L	96906	71	24
MS24391D5L	96906	71	7
MS24391D5L	96906	76	106
MS24391D5L	96906	76	41
MS24391D5L	96906	81	54
MS24391D5L	96906	83	166
MS24391D5L	96906	83	261
MS24391D5L	96906	83	59
MS24391D5L	96906	88	21
MS24391D5L	96906	89	23
MS24391D6L	96906	63	93
MS24391D6L	96906	72	88
MS24391D6L	96906	74	13
MS24391D6L	96906	119	
MS24391D6L	96906	129	
MS24391D6L	96906	134	49
MS24391D6L	96906	138	1
MS24391D6L	96906	139	55
MS24391D6L	96906	149	31
MS24391D6L	96906	218	
MS24391D6L	96906	274	1
MS24391D8L	96906	51	20
MS24391D8L	96906	53	4
MS24391D8L	96906	83	157
MS24391D8L	96906	88	100C
MS24391D8L	96906	88	95
MS24392-4	96906	BULK	
MS24392C4	96906	BULK	
MS24392C8	96906	QC1	100
MS24392C8	96906	143	15
MS24392C8	96906	BULK	
MS24392D10	96906	BULK	
MS24392D16	96906	211	
MS24392D16	96906	213	
MS24392D16	96906	213	24
MS24392D16	96906	218	
MS24392D16	96906	220	
MS24392D16	96906	220	21
MS24392D16	96906	221	100
MS24392D16	96906	221	125
MS24392D16	96906	221	135
MS24392D16	96906	221	49
MS24392D16	96906	221	89
MS24392D16	96906	221	90
MS24392D16	96906	221	96
MS24392D16	96906	221	98
MS24392D16	96906	BULK	
MS24392D16	96906	KITS	
MS24392D4	96906	178	10
MS24392D4	96906	178	25
MS24392D4	96906	178	3
MS24392D4	96906	179	12
MS24392D4	96906	179	28
MS24392D4	96906	180	32
MS24392D4	96906	213	
MS24392D4	96906	217	
MS24392D4	96906	262	42
MS24392D5	96906	KITS	
MS24392D6	96906	BULK	
MS24392D6	96906	115	41
MS24392D6	96906	213	
MS24392D6	96906	220	31
MS24392D6	96906	221	107
MS24392D6	96906	221	11
MS24392D6	96906	221	88
MS24392D6	96906	221	89
MS24392D6	96906	BULK	
MS24392D6	96906	KITS	
MS24392D6	96906	219A	102

REFERENCE NUMBER	MFG CODE	FIG NUMBER	ITEM NUMBER
MS24392D6	96906	219A	168
MS24392D6	96906	219A	63
MS24392D8	96906	BULK	
MS24393D16	96906	220	
MS24393D16	96906	221	35
MS24393D16	96906	221	59
MS24393D16	96906	KITS	
MS24393D4	96906	179	24
MS24393D4	96906	179	9
MS24393D4	96906	213	
MS24393D4	96906	262	40
MS24393D4	96906	262	49
MS24393D4	96906	KITS	
MS24393D8	96906	BULK	
MS24394-4	96906	BULK	
MS24394C4	96906	BULK	
MS24394D12	96906	34	
MS24394D16	96906	213	
MS24394D16	96906	213	17
MS24394D16	96906	220	
MS24394D16	96906	220	28
MS24394D16	96906	221	26
MS24394D16	96906	221	61
MS24394D16	96906	221	76
MS24394D4	96906	QC1	62
MS24394D4	96906	178	15
MS24394D4	96906	179	25
MS24394D4	96906	217	
MS24394D4	96906	217A	11
MS24394D4	96906	217B	14
MS24394D6	96906	221	135
MS24394D6	96906	221	59
MS24394D6	96906	221	89
MS24395D16	96906	218	65
MS24395D4	96906	178	20
MS24396D10	96906	BULK	
MS24396D16	96906	213	30
MS24396D4	96906	221	81
MS24396D6	96906	221	125
MS24396D6	96906	221	19
MS24396D6	96906	221	25
MS24396D6	96906	221	79
MS24396D6	96906	221	90
MS24396D8	96906	BULK	
MS24397D12	96906	119	286
MS24397D12	96906	KITS	
MS24397D13	96906	129	70B
MS24397D14	96906	213	
MS24397D151	96906	BULK	
MS24397D16	96906	117	73E
MS24397D16	96906	129	71A
MS24397D16	96906	221	59
MS24397D2	96906	QC1	107
MS24397D2	96906	QC1	117
MS24397D2	96906	112	85
MS24397D2	96906	117	65
MS24397D2	96906	119	17
MS24397D2	96906	119	280
MS24397D2	96906	119	44
MS24397D2	96906	129	90A
MS24397D2	96906	143	29
MS24397D2	96906	KITS	
MS24397D3	96906	129	
MS24397D31	96906	KITS	
MS24397D5	96906	BULK	
MS24398D16-12	96906	213	
MS24398D4-2	96906	218	
MS24398J8-6	96906	BULK	
MS24398T8-6	96906	143	16
MS24399D13	96906	QC1	99
	96906	QC1	137

REFERENCE NUMBER	MFG CODE	FIG NUMBER	ITEM NUMBER
MS24399D22	96906	BULK	
MS24399D24	96906	258	6
MS24399D7	96906	BULK	
MS24400-10	96906	129	56A
MS24400-10	96906	129	77
MS24400-8	96906	117	
MS24400-8	96906	119	264
MS24400D10	96906	117	
MS24400D10	96906	119	256
MS24400D10	96906	119	260
MS24400D10	96906	129	
MS24400D10	96906	139	33
MS24400D10	96906	139	81
MS24400D10	96906	KITS	
MS24400D2	96906	95	51
MS24400D24	96906	BULK	
MS24400D4	96906	95	155
MS24400D4	96906	95	157
MS24400D4	96906	95	160
MS24400D4	96906	QC1	63
MS24400D4	96906	109	10
MS24400D4	96906	109	32
MS24400D4	96906	110	
MS24400D4	96906	110	20
MS24400D4	96906	110	25
MS24400D4	96906	110	30
MS24400D4	96906	110	38
MS24400D4	96906	110	39
MS24400D4	96906	110	42
MS24400D4	96906	110	51
MS24400D4	96906	110	68
MS24400D4	96906	110	82
MS24400D4	96906	110	85
MS24400D4	96906	112	125
MS24400D4	96906	112	135
MS24400D4	96906	112	147
MS24400D4	96906	112	155
MS24400D4	96906	112	165
MS24400D4	96906	112	169
MS24400D4	96906	115	
MS24400D4	96906	115	1
MS24400D4	96906	115	10
MS24400D4	96906	115	11
MS24400D4	96906	115	13
MS24400D4	96906	115	15
MS24400D4	96906	115	19
MS24400D4	96906	115	22
MS24400D4	96906	115	26
MS24400D4	96906	115	3
MS24400D4	96906	115	34
MS24400D4	96906	115	59
MS24400D4	96906	115	8
MS24400D4	96906	116	
MS24400D4	96906	117	
MS24400D4	96906	117	19I
MS24400D4	96906	117	25A
MS24400D4	96906	117	288
MS24400D4	96906	119	
MS24400D4	96906	119	117
MS24400D4	96906	119	120
MS24400D4	96906	119	136
MS24400D4	96906	119	139
MS24400D4	96906	119	143
MS24400D4	96906	119	172
MS24400D4	96906	119	208
MS24400D4	96906	119	212
MS24400D4	96906	119	220
MS24400D4	96906	119	248
MS24400D4	96906	119	251
MS24400D4	96906	119	368
MS24400D4	96906	119	89
MS24400D4	96906	129	41A
MS24400D4	96906	129	53
MS24400D4	96906	129	61A
MS24400D4	96906	129	81A
MS24400D4	96906	129	84A
MS24400D4	96906	135	4
MS24400D4	96906	139	6
MS24400D4	96906	139	63
MS24400D4	96906	178	17
MS24400D4	96906	178	40
MS24400D4	96906	179	25A
MS24400D4	96906	179	9A
MS24400D4	96906	180	15B
MS24400D4	96906	180	20B
MS24400D4	96906	180	25B
MS24400D4	96906	213	
MS24400D4	96906	217	
MS24400D4	96906	221	81
MS24400D4	96906	257	16A
MS24400D4	96906	257	18A
MS24400D4	96906	257	5A
MS24400D4	96906	257	7A
MS24400D4	96906	257	9A
MS24400D4	96906	217A	11
MS24400D4	96906	217B	14
MS24400D6	96906	QC1	123
MS24400D6	96906	109	18
MS24400D6	96906	109	20
MS24400D6	96906	109	23
MS24400D6	96906	109	27
MS24400D6	96906	109	29
MS24400D6	96906	109	35
MS24400D6	96906	109	38
MS24400D6	96906	109	70
MS24400D6	96906	109	73
MS24400D6	96906	109	74
MS24400D6	96906	109	8
MS24400D6	96906	109	86
MS24400D6	96906	110	34
MS24400D6	96906	110	35
MS24400D6	96906	110	64
MS24400D6	96906	110	80
MS24400D6	96906	110	84
MS24400D6	96906	112	62
MS24400D6	96906	115	55
MS24400D6	96906	115	57
MS24400D6	96906	116	
MS24400D6	96906	117	
MS24400D6	96906	117	100
MS24400D6	96906	117	19D
MS24400D6	96906	117	58E
MS24400D6	96906	117	91
MS24400D6	96906	117	94
MS24400D6	96906	117	98
MS24400D6	96906	119	233
MS24400D6	96906	119	238
MS24400D6	96906	119	240
MS24400D6	96906	119	243
MS24400D6	96906	129	35A
MS24400D6	96906	129	37
MS24400D6	96906	129	41C
MS24400D6	96906	129	68A
MS24400D6	96906	139	
MS24400D6	96906	139	105
MS24400D6	96906	139	108
MS24400D6	96906	139	13
MS24400D6	96906	139	15
MS24400D6	96906	139	18
MS24400D6	96906	139	27
MS24400D6	96906	139	28
MS24400D6	96906	139	43

REFERENCE NUMBER	MFG CODE	FIG NUMBER	ITEM NUMBER
MS24400D6	96906	139	47
MS24400D6	96906	139	59
MS24400D6	96906	139	67
MS24400D6	96906	139	74
MS24400D6	96906	139	8
MS24400D6	96906	139	95
MS24400D6	96906	143	32
MS24400D6	96906	178	130
MS24400D6	96906	178	37
MS24400D6	96906	178	79
MS24400D6	96906	213	
MS24400D6	96906	220	
MS24400D6	96906	221	105
MS24400D6	96906	221	130
MS24400D6	96906	221	133
MS24400D6	96906	221	135
MS24400D6	96906	221	19
MS24400D6	96906	221	22
MS24400D6	96906	221	25
MS24400D6	96906	221	37
MS24400D6	96906	221	59
MS24400D6	96906	221	63
MS24400D6	96906	221	66
MS24400D6	96906	221	7
MS24400D6	96906	221	79
MS24400D6	96906	221	89
MS24400D6	96906	221	95
MS24400D6	96906	273	10A
MS24400D8	96906	95	172
MS24400D8	96906	109	48
MS24400D8	96906	117	35
MS24400D8	96906	117	43A
MS24400D8	96906	117	86
MS24400D8	96906	117	87
MS24400D8	96906	119	262
MS24400D8	96906	129	
MS24400D8	96906	129	102A
MS24400D8	96906	129	112A
MS24400D8	96906	129	39
MS24400D8	96906	139	30
MS24400D8	96906	139	31
MS24400D8	96906	139	78
MS24402D16	96906	213	13
MS24402D16	96906	219	76
MS24402D16	96906	219A	197
MS24402D4	96906	178	97
MS24402D4	96906	262	13
MS24402D8	96906	QC1	55
MS24402D8	96906	217	8
MS24420-1	96906	BULK	
MS24423-10	96906	119	258
MS24423-10	96906	129	5
MS24423-10	96906	129	7A
MS24423-10	96906	129	77
MS24423-10	96906	129	9
MS24423-10	96906	139	33
MS24423-10	96906	139	81
MS24423-16	96906	129	30
MS24423-16	96906	129	64
MS24423-4	96906	109	
MS24423-4	96906	109	30
MS24423-4	96906	110	100
MS24423-4	96906	110	72
MS24423-4	96906	119	109
MS24423-4	96906	119	289
MS24423-4	96906	119	368
MS24423-4	96906	119	373
MS24423-4	96906	119	59
MS24423-4	96906	119	7
MS24423-4	96906	139	10
MS24423-4	96906	139	37
MS24423-4	96906	139	65
MS24423-4	96906	139	85
MS24423-6	96906	QC1	109
MS24423-6	96906	QC1	121
MS24423-6	96906	109	33
MS24423-6	96906	109	36
MS24423-6	96906	117	94
MS24423-6	96906	119	229
MS24423-6	96906	119	320
MS24423-6	96906	119	359
MS24423-6	96906	129	135
MS24423-6	96906	129	70A
MS24423-6	96906	139	12
MS24423-6	96906	143	22
MS24423-8	96906	117	43A
MS24423-8	96906	117	72
MS24423-8	96906	119	
MS24423-8	96906	129	110A
MS24423-8	96906	129	114
MS24423-8	96906	129	48
MS24423-8	96906	129	71A
MS24465-8	96906	270	58
MS24478-2	96906	117	83
MS24478-2	96906	119	395
MS24478-2	96906	129	93
MS24523-21	96906	201	23
MS24523-21	96906	201	35
MS24523-21	96906	201	74
MS24523-21	96906	201	75
MS24523-21	96906	201	9
MS24523-22	96906	188	32
MS24523-23	96906	157	40
MS24523-23	96906	158	37
MS24523-23	96906	187	13
MS24523-23	96906	187	20
MS24523-23	96906	187	21
MS24523-23	96906	187	42
MS24523-23	96906	196	19
MS24523-23	96906	196	53
MS24523-24	96906	187	43
MS24523-24	96906	187	49
MS24523-24	96906	187	6
MS24523-24	96906	201	10
MS24523-24	96906	201	108
MS24523-24	96906	201	83
MS24523-24	96906	201	97
MS24523-27	96906	187	24
MS24523-30	96906	201	18
MS24523-31	96906	204	16
MS24523-33	96906	201	33
MS24523-33	96906	201	48
MS24523-33	96906	201	98
MS24524-21	96906	201	73
MS24524-23	96906	157	27
MS24524-23	96906	158	27
MS24524-23	96906	187	36
MS24524-23	96906	201	95
MS24524-24	96906	201	93
MS24524-26	96906	167	8
MS24524-27	96906	183	12
MS24524-27	96906	189	16
MS24524-27	96906	183A	77
MS24524-32	96906	187	11
MS24524-32	96906	187	18
MS24524-32	96906	187	4
MS24524-33	96906	201	46
MS24525-21	96906	201	85
MS24525-23	96906	187	27
MS24525-24	96906	BULK	
MS24547-1	96906	169	13
MS24547-1	96906	173	9

REFERENCE NUMBER	MFG CODE	FIG NUMBER	ITEM NUMBER
MS24547-1	96906	192	79
MS24547-1	96906	232	15
MS24547-1	96906	234	35
MS24568D1	96906	182	21
MS24568D1	96906	188	6
MS24568D1	96906	191	6
MS24568D1	96906	195	34
MS24568D1	96906	196	25
MS24568D1	96906	200	20
MS24568D1	96906	204	
MS24568D1	96906	204	3
MS24568D1	96906	209	34
MS24585-492	96906	BULK	
MS24585C307	96906	20	
MS24585C323	96906	20	
MS24585C419	96906	BULK	
MS24585C55	96906	BULK	
MS24586-109	96906	17	25A
MS24586-141	96906	24	17
MS24586-215	96906	100	22
MS24586-50	96906	15	1
MS24586-77	96906	17	9
MS24586C141	96906	24	
MS24586C272	96906	100	22
MS24586C277	96906	100	22
MS24586C277	96906	BULK	
MS24586C317	96906	100	22
MS24587-16	96906	BULK	
MS24587-6	96906	BULK	
MS24587D12	96906	BULK	
MS24615-153	96906	18	
MS24615-153	96906	229	37
MS24617-10	96906	36B	11
MS24617-10	96906	36B	2
MS24617-10	96906	36B	4
MS24617-10	96906	37B	7
MS24619-12	96906	BULK	
MS24619-13	96906	BULK	
MS24621-17	96906	37	11
MS24621-17	96906	37	22
MS24621-30	96906	42	
MS24621-42	96906	KITS	
MS24621-43	96906	BULK	
MS24621-45	96906	BULK	
MS24625-17	96906	36A	2
MS24653D4	96906	BULK	
MS24658-21E	96906	201	96
MS24658-22F	96906	196	53
MS24658-22F	96906	201	62
MS24658-23G	96906	201	84
MS24658-24E	96906	201	86
MS24658-24F	96906	201	43
MS24658-33E	96906	BULK	
MS24659-21A	96906	200	
MS24659-24E	96906	184	55
MS24659-27E	96906	167	7
MS24659-31F	96906	201	21
MS24659-31F	96906	201	76
MS24659-33E	77272	201	22
MS24659-33K	96906	201	42
MS24659-33K	96906	201	50
MS24660-23D	96906	BULK	
MS24660-23F	96906	187	25
MS24665-12	96906	270	59
MS24665-132		KITS	
MS24665-132	96906	59	36
MS24665-134		KITS	
MS24665-134	96906	34	44
MS24665-134	96906	59	10
MS24665-134	96906	184	10A
MS24665-134	96906	42A	12

REFERENCE NUMBER	MFG CODE	FIG NUMBER	ITEM NUMBER
MS24665-134	96906	42C	13
MS24665-138	96906	18	
MS24665-138	96906	22	22D
MS24665-15	96906	137	
MS24665-151	96906	11	102
MS24665-151	96906	17	
MS24665-151	96906	17	1
MS24665-151	96906	18	
MS24665-151	96906	18	37
MS24665-151	96906	18	86
MS24665-151	96906	20	107
MS24665-151	96906	20	84
MS24665-151	96906	20	97
MS24665-151	96906	37	25
MS24665-151	96906	137	1
MS24665-151	96906	137	11
MS24665-151	96906	256	6
MS24665-151	96906	36A	14
MS24665-151	96906	36B	17
MS24665-151	96906	37A	41
MS24665-151	96906	37A	54
MS24665-151	96906	37A	60
MS24665-151	96906	37A	66
MS24665-151	96906	37A	73
MS24665-151	96906	37A	80
MS24665-151	96906	37A	83
MS24665-151	96906	37A	86
MS24665-151	96906	37B	25
MS24665-151	96906	42B	16
MS24665-151	96906	KITS	
MS24665-153	96906	18	91A
MS24665-153	96906	18	98A
MS24665-153	96906	28	3
MS24665-153	96906	28	5
MS24665-153	96906	31	
MS24665-153	96906	66	1
MS24665-153	96906	66	12
MS24665-153	96906	66	27
MS24665-153	96906	71	117
MS24665-153	96906	76	118
MS24665-153	96906	81	165B
MS24665-153	96906	F16	18
MS24665-153	96906	F16	33
MS24665-153	96906	QC1	37A
MS24665-153	96906	QC1	41A
MS24665-153	96906	222	111
MS24665-153	96906	222	136
MS24665-153	96906	222	14
MS24665-153	96906	222	143
MS24665-153	96906	222	19A
MS24665-153	96906	222	32
MS24665-153	96906	223	1
MS24665-153	96906	223	101
MS24665-153	96906	223	106
MS24665-153	96906	223	123
MS24665-153	96906	223	135
MS24665-153	96906	223	14
MS24665-153	96906	223	146
MS24665-153	96906	223	188
MS24665-153	96906	223	203
MS24665-153	96906	223	21
MS24665-153	96906	223	29
MS24665-153	96906	223	38
MS24665-153	96906	223	74
MS24665-153	96906	223	8
MS24665-153	96906	223	83
MS24665-153	96906	223	88
MS24665-153	96906	228	129A
MS24665-153	96906	228	26
MS24665-153	96906	228	3
MS24665-153	96906	228	33

REFERENCE NUMBER	MFG CODE	FIG NUMBER	ITEM NUMBER
MS24665-153	96906	237	24
MS24665-153	96906	237	32
MS24665-153	96906	237	4
MS24665-153	96906	237	52
MS24665-153	96906	239	114
MS24665-153	96906	239	128
MS24665-153	96906	239	14
MS24665-153	96906	239	150
MS24665-153	96906	239	8
MS24665-153	96906	239	94
MS24665-153	96906	244	12
MS24665-153	96906	244	21
MS24665-153	96906	244	30
MS24665-153	96906	244	5
MS24665-153	96906	255	5A
MS24665-153	96906	275	14A
MS24665-153	96906	42B	
MS24665-153	96906	42B	43
MS24665-153	96906	42B	50
MS24665-153	96906	42B	6
MS24665-153	96906	42B	61
MS24665-153	96906	KITS	
MS24665-153	96906	242	1
MS24665-155	96906	242	2
MS24665-155		KITS	
MS24665-155	96906	15	31B
MS24665-155	96906	16	26A
MS24665-155	96906	16	6A
MS24665-155	96906	18	
MS24665-155	96906	20	
MS24665-155	96906	22	
MS24665-155	96906	22	17C
MS24665-155	96906	22	3C
MS24665-155	96906	22	6D
MS24665-155	96906	24	
MS24665-155	96906	24	19A
MS24665-155	96906	24	6A
MS24665-155	96906	24	7
MS24665-155	96906	28	
MS24665-155	96906	31	
MS24665-155	96906	33	44A
MS24665-155	96906	36	26
MS24665-155	96906	71	127
MS24665-155	96906	75	21
MS24665-155	96906	F15	26
MS24665-155	96906	F15	51
MS24665-155	96906	125	2
MS24665-155	96906	129	
MS24665-155	96906	183	51
MS24665-155	96906	184	6A
MS24665-155	96906	184	7A
MS24665-155	96906	207	
MS24665-155	96906	208	20
MS24665-155	96906	222	
MS24665-155	96906	222	1
MS24665-155	96906	226	12
MS24665-155	96906	226	2
MS24665-155	96906	228	11
MS24665-155	96906	228	118
MS24665-155	96906	228	127A
MS24665-155	96906	228	158
MS24665-155	96906	228	173
MS24665-155	96906	228	184
MS24665-155	96906	228	47
MS24665-155	96906	228	55
MS24665-155	96906	228	64
MS24665-155	96906	228	66
MS24665-155	96906	228	71
MS24665-155	96906	228	95
MS24665-155	96906	229	31
MS24665-155	96906	235	3

REFERENCE NUMBER	MFG CODE	FIG NUMBER	ITEM NUMBER
MS24665-155	96906	235	8
MS24665-155	96906	240	17
MS24665-155	96906	240	25
MS24665-155	96906	243	4
MS24665-155	96906	245	1
MS24665-155	96906	245	18C
MS24665-155	96906	245	21A
MS24665-155	96906	246	4A
MS24665-155	96906	253	43
MS24665-155	96906	255	23
MS24665-155	96906	255	3
MS24665-155	96906	256	9
MS24665-155	96906	263	10
MS24665-155	96906	263	22
MS24665-155	96906	264	1B
MS24665-155	96906	265	156
MS24665-155	96906	265	236
MS24665-155	96906	265	238
MS24665-155	96906	265	241
MS24665-155	96906	265	248
MS24665-155	96906	265	8
MS24665-155	96906	268	145
MS24665-155	96906	268	77
MS24665-155	96906	270	4
MS24665-155	96906	KITS	
MS24665-155	96906	268	270
MS24665-155	96906	BULK	
MS24665-155	96906	18	
MS24665-155	96906	62	8A
MS24665-155	96906	QC1	21A
MS24665-155	96906	231	109
MS24665-155	96906	BULK	
MS24665-155	96906	KITS	
MS24665-155	96906	33	39B
MS24665-155	96906	33	41A
MS24665-155	96906	KITS	
MS24665-155	96906	18	29
MS24665-155	96906	18	79
MS24665-155	96906	76	160
MS24665-155	96906	248	42
MS24665-155	96906	28	24F
MS24665-155	96906	BULK	
MS24665-155	96906	BULK	
MS24665-155	96906	49	31
MS24665-155	96906	49	56
MS24665-155	96906	51	72
MS24665-155		KITS	
MS24665-155	96906	59	20
MS24665-155	96906	59	1
MS24665-155	96906	92	12
MS24665-155	96906	92	67
MS24665-155	96906	KITS	
MS24665-155	96906	45	29C
MS24665-155	96906	49	49
MS24665-155	96906	F15	20
MS24665-155	96906	KITS	
MS24665-155	96906	36	
MS24665-155	96906	60	8
MS24665-155	96906	61	1
MS24665-155	96906	61	13
MS24665-155	96906	61	18
MS24665-155	96906	75	13
MS24665-155	96906	75	52
MS24665-155	96906	75	61
MS24665-155	96906	90	15C
MS24665-155	96906	222	99
MS24665-155	96906	236	15
MS24665-155	96906	236	2
MS24665-155	96906	237	10
MS24665-155	96906	237	38
MS24665-302	96906	239	101

REFERENCE NUMBER	MFG CODE	FIG NUMBER	ITEM NUMBER
MS24665-302	96906	239	163
MS24665-302	96906	240	36
MS24665-302	96906	240	47
MS24665-302	96906	240	8
MS24665-302	96906	244	103
MS24665-302	96906	244	114
MS24665-302	96906	244	124
MS24665-302	96906	244	135
MS24665-302	96906	244	71
MS24665-302	96906	270	53
MS24665-302	96906	KITS	
MS24665-304	96906	34	36
MS24665-304	96906	34	47
MS24665-304	96906	45	10A
MS24665-304	96906	45	11
MS24665-304	96906	75	13
MS24665-304	96906	75	44
MS24665-304	96906	75	52
MS24665-304	96906	75	61
MS24665-304	96906	75	62
MS24665-304	96906	F16	14
MS24665-304	96906	F16	36
MS24665-304	96906	222	112
MS24665-304	96906	222	124
MS24665-304	96906	222	162
MS24665-304	96906	222	168
MS24665-304	96906	222	176
MS24665-304	96906	222	182
MS24665-304	96906	222	190
MS24665-304	96906	222	201
MS24665-304	96906	222	45
MS24665-304	96906	222	51
MS24665-304	96906	222	57
MS24665-304	96906	222	62
MS24665-304	96906	222	70
MS24665-304	96906	222	89
MS24665-304	96906	222	94
MS24665-304	96906	222	99
MS24665-304	96906	223	160
MS24665-304	96906	223	53
MS24665-304	96906	239	1
MS24665-304	96906	239	101
MS24665-304	96906	239	163
MS24665-304	96906	239	38
MS24665-304	96906	239	72
MS24665-304	96906	239	83
MS24665-304	96906	242	3
MS24665-304	96906	243	15A
MS24665-304	96906	243	22A
MS24665-304	96906	243	9A
MS24665-304	96906	244	103
MS24665-304	96906	244	114
MS24665-304	96906	244	124
MS24665-304	96906	244	135
MS24665-304	96906	244	39
MS24665-304	96906	244	45
MS24665-304	96906	244	51
MS24665-304	96906	244	55
MS24665-304	96906	244	60
MS24665-304	96906	244	66
MS24665-304	96906	244	71
MS24665-304	96906	244	83
MS24665-304	96906	244	88
MS24665-304	96906	244	94
MS24665-304	96906	244	99
MS24665-304	96906	KITS	
MS24665-309	96906	KITS	
MS24665-355		KITS	
MS24665-357	96906	44	18
MS24665-359	96906	44	14
MS24665-362	96906	51	66

REFERENCE NUMBER	MFG CODE	FIG NUMBER	ITEM NUMBER
MS24665-372		KITS	
MS24665-372	96906	49	32
MS24665-372	96906	51	25E
MS24665-372	96906	239	50
MS24665-372	96906	34	30
MS24665-374	96906	69	5
MS24665-374	96906	70	20
MS24665-374	96906	75	52
MS24665-374	96906	239	19
MS24665-374	96906	239	50
MS24665-374	96906	239	90
MS24665-374	96906	244	60
MS24665-374	96906	244	71
MS24665-374	96906	244	83
MS24665-374	96906	244	88
MS24665-374	96906	244	94
MS24665-374	96906	244	99
MS24665-374	96906	KITS	
MS24665-376	96906	72	2
MS24665-376	96906	72	36
MS24665-376	96906	72	68
MS24665-376	96906	75	44
MS24665-376	96906	75	52
MS24665-376	96906	F14	4
MS24665-376	96906	F16	23
MS24665-376	96906	KITS	
MS24665-377	96906	51	4A
MS24665-377	96906	72	2
MS24665-377	96906	222	185
MS24665-377	96906	222	65
MS24665-377	96906	238	16
MS24665-377	96906	238	40
MS24665-377	96906	238	48
MS24665-377	96906	240	74
MS24665-377	96906	KITS	
MS24665-378	96906	44	25E
MS24665-378	96906	244	77
MS24665-380	96906	45	13
MS24665-380	96906	45	14
MS24665-380	96906	45	9
MS24665-380	96906	49	58
MS24665-380	96906	KITS	
MS24665-4	96906	59	13
MS24665-444	96906	BULK	
MS24665-446	96906	44	21
MS24665-447	96906	45	12
MS24665-448	96906	BULK	
MS24665-5	96906	BULK	
MS24665-502		KITS	
MS24665-516	96906	KITS	
MS24665-520	96906	51	62A
MS24665-520	96906	60	25
MS24665-520	96906	61	26
MS24665-520	96906	KITS	
MS24665-86	96906	13	2B
MS24665-86	96906	21	23A
MS24665-88	96906	137	18
MS24665-88	96906	137	40
MS24671-21	96906	156	14
MS24671-9	96906	183A	25
MS24673-2	96906	49	51
MS24673-2	96906	72	26
MS24673-2	96906	72	57
MS24673-2	96906	73	1
MS24673-2	96906	74	15
MS24673-2	96906	148	6
MS24673-2	96906	KITS	
MS24673-7	96906	228	143
MS24673-9	96906	BULK	
MS24674-12	96906	BULK	
MS24674-15	96906	148	12

REFERENCE NUMBER	MFG CODE	FIG NUMBER	ITEM NUMBER
MS24674-15	96906	228	139
MS24674-7	96906	BULK	
MS24674-8	96906	BULK	
MS24675-11	96906	64A	16
MS24675-13	96906	64A	68
MS24676-6	96906	64A	31
MS24677-15	96906	134	59
MS24677-17	96906	149	72
MS24677-22	96906	BULK	
MS24677-24	96906	71	21A
MS24677-37	96906	138	16
MS24678-10	96906	67	1
MS24678-10	96906	67	12
MS24678-10	96906	272	9
MS24678-11	96906	BULK	
MS24678-17	96906	190A	20
MS24678-19	96906	71	136
MS24678-20	96906	71	142
MS24678-24	96906	67	22
MS24678-24	96906	67	36
MS24678-25	96906	71	115
MS24678-9	96906	BULK	
MS24695S4	96906	211	40
MS24690	96906	117	84
MS24690	96906	119	403
MS24690	96906	129	
MS24693-275	96906	37A	10
MS24693-275	96906	37A	21
MS24693-275	96906	37A	75
MS24693-30	96906	BULK	
MS24693A26	96906	18	
MS24693A269	96906	BULK	
MS24693A270	96906	21	
MS24693BB28	96906	157	26
MS24693BB28	96906	157	67
MS24693BB28	96906	157	79
MS24693BB28	96906	158	71
MS24693BB28	96906	167	23
MS24693BB28	96906	KITS	
MS24693BB29	96906	167	47
MS24693BB52	96906	BULK	
MS24693BB6	96906	157	85
MS24693BB8	96906	BULK	
MS24693C1	96906	29	
MS24693C25	96906	BULK	
MS24693C268	96906	BULK	
MS24693C273	96906	196	
MS24693C273	96906	204	33D
MS24693C29	96906	BULK	
MS24693C30	96906	KITS	
MS24693C33	96906	KITS	
MS24693C4	96906	68	32
MS24693C52	96906	KITS	
MS24693C6	96906	KITS	
MS24693C8	96906	BULK	
MS24693C8	96906	KITS	
MS24693S14	96906	BULK	
MS24693S2	96906	192	64
MS24693S2	96906	192	86
MS24693S2	96906	193	6
MS24693S2	96906	203	21
MS24693S2	96906	203	28
MS24693S2	96906	203	7
MS24693S2	96906	228	94
MS24693S2	96906	231	121
MS24693S2	96906	231	122A
MS24693S2	96906	182A	2
MS24693S2	96906	182A	7
MS24693S25	96906	BULK	
MS24693S26	96906	194	43
MS24693S26	96906	203	23

REFERENCE NUMBER	MFG CODE	FIG NUMBER	ITEM NUMBER
MS24693S27	96906	189	17
MS24693S270	96906	182	
MS24693S272	96906	34	
MS24693S272	96906	183	1
MS24693S272	96906	183	14
MS24693S272	96906	281	
MS24693S272	96906	282	12
MS24693S273	96906	196	
MS24693S273	96906	204	
MS24693S273	96906	KITS	
MS24693S274	96906	10	
MS24693S275	96906	204	
MS24693S28	96906	190	107
MS24693S28	96906	190	35
MS24693S29	96906	BULK	
MS24693S3	96906	184	54
MS24693S30	96906	190	26
MS24693S31	96906	190	18
MS24693S32	96906	62	
MS24693S32	96906	204	
MS24693S32	96906	230	17
MS24693S33	96906	BULK	
MS24693S34	96906	157	20
MS24693S34	96906	157	29
MS24693S34	96906	157	52
MS24693S34	96906	157	58
MS24693S34	96906	158	22
MS24693S34	96906	158	29
MS24693S34	96906	158	47
MS24693S34	96906	158	53
MS24693S34	96906	190	51
MS24693S4	96906	183	17
MS24693S4	96906	184	14
MS24693S4	96906	184	45
MS24693S4	96906	190	102
MS24693S4	96906	193	77
MS24693S4	96906	193	82
MS24693S4	96906	194	24
MS24693S4	96906	194	28
MS24693S4	96906	194	32
MS24693S4	96906	194	34
MS24693S4	96906	196	
MS24693S4	96906	202	26
MS24693S4	96906	202	28
MS24693S4	96906	203	34
MS24693S4	96906	182A	1
MS24693S4	96906	182A	6
MS24693S46	96906	201	107
MS24693S46	96906	201	32
MS24693S46	96906	201	72
MS24693S48	96906	30	41
MS24693S48	96906	183	23A
MS24693S50	96906	BULK	
MS24693S51	96906	167	9
MS24693S52	96906	BULK	
MS24693S6	96906	183	46
MS24693S6	96906	185	1
MS24693S8	96906	BULK	
MS24694A66	96906	21	47
MS24694C48	96906	428	87
MS24694C52	96906	32	
MS24694C56	96906	32	
MS24694C56	96906	180	39
MS24694C56	96906	KITS	
MS24694C80	96906	BULK	
MS24694S101	96906	69	15
MS24694S102	96906	BULK	
MS24694S105	96906	10	43
MS24694S105	96906	11	138
MS24694S105	96906	11A	24
MS24694S105	96906	11A	42

REFERENCE NUMBER	MFG CODE	FIG NUMBER	ITEM NUMBER
MS24694S105	96906	11A	68
MS24694S105	96906	11B	51
MS24694S105	96906	11B	56A
MS24694S105	96906	271	2
MS24694S105	96906	271	5
MS24694S105	96906	271	7
MS24694S105	96906	KITS	
MS24694S107	96906	11	138A
MS24694S107	96906	11A	25
MS24694S107	96906	11A	42A
MS24694S107	96906	11A	53
MS24694S107	96906	11A	67
MS24694S107	96906	11B	52
MS24694S107	96906	271	3
MS24694S107	96906	271	4
MS24694S107	96906	271	6
MS24694S107	96906	271	8
MS24694S108	96906	BULK	
MS24694S109	96906	11A	41
MS24694S109	96906	11A	72A
MS24694S109	96906	271	9
MS24694S111	96906	11A	54
MS24694S111	96906	11A	69
MS24694S112	96906	20	
MS24694S113	96906	BULK	
MS24694S115	96906	BULK	
MS24694S116	96906	10	
MS24694S116	96906	11A	39
MS24694S116	96906	11A	55
MS24694S116	96906	11A	70
MS24694S117	96906	11A	40
MS24694S117	96906	11A	55A
MS24694S117	96906	11A	71
MS24694S119	96906	21	88
MS24694S121	96906	21	88
MS24694S121	96906	11A	38
MS24694S121	96906	11A	72
MS24694S121	96906	KITS	
MS24694S123	96906	BULK	
MS24694S126	96906	21	81
MS24694S129	96906	21	81
MS24694S13	96906	BULK	
MS24694S332	96906	BULK	
MS24694S48	96906	14	37
MS24694S48	96906	14	51
MS24694S48	96906	219	
MS24694S48	96906	KITS	
MS24694S58	96906	229	2
MS24694S50	96906	10	
MS24694S50	96906	10	
MS24694S50	96906	10	
MS24694S50	96906	13	40E
MS24694S50	96906	69	16
MS24694S50	96906	218	4
MS24694S50	96906	37A	98
MS24694S50	96906	219A	110
MS24694S50	96906	219A	5
MS24694S51	96906	BULK	
MS24694S52	96906	10	
MS24694S52	96906	10	
MS24694S52	96906	20	16
MS24694S52	96906	20	3
MS24694S52	96906	20	57
MS24694S52	96906	20	75
MS24694S52	96906	211	
MS24694S52	96906	211	35
MS24694S52	96906	211	4
MS24694S52	96906	211	9
MS24694S52	96906	218	13
MS24694S52	96906	218	4
MS24694S52	96906	218	44A

REFERENCE NUMBER	MFG CODE	FIG NUMBER	ITEM NUMBER
MS24694S52	96906	218	9
MS24694S52	96906	219	
MS24694S52	96906	219	2
MS24694S52	96906	219	53
MS24694S52	96906	219	58
MS24694S52	96906	219	7
MS24694S52	96906	279	
MS24694S52	96906	KITS	
MS24694S52	96906	219A	114
MS24694S52	96906	219A	160
MS24694S52	96906	219A	40
MS24694S52	96906	219A	9
MS24694S54	96906	10	
MS24694S54	96906	10	
MS24694S54	96906	10	
MS24694S54	96906	17	
MS24694S54	96906	17	17
MS24694S54	96906	17	22
MS24694S54	96906	17	27
MS24694S54	96906	20	
MS24694S54	96906	20	77
MS24694S54	96906	218	39
MS24694S54	96906	218	44
MS24694S54	96906	218	49
MS24694S54	96906	219	
MS24694S54	96906	219	38
MS24694S54	96906	219	42
MS24694S54	96906	219	83
MS24694S54	96906	KITS	
MS24694S54	96906	219A	120
MS24694S54	96906	219A	15
MS24694S56	96906	17	15
MS24694S56	96906	17	22
MS24694S56	96906	279	
MS24694S58	96906	10	
MS24694S58	96906	37	23
MS24694S58	96906	KITS	
MS24694S60	96906	20	76
MS24694S60	96906	264	3C
MS24694S62	96906	BULK	
MS24694S66	96906	BULK	
MS24694S68	96906	BULK	
MS24694S69	96906	21	48
MS24694S7	96906	279	
MS25002-1	96906	201	34
MS25008-1	96906	100	10
MS25008-1	96906	100	20
MS25010-A11A	96906	1 99	30
MS25010-11B	96906	1 84	58
MS25010-2A	96906	1[illegible]2	
MS25010-2A	96906	20 1	29
MS25010A11A	96906	15[illegible]	63
MS25010A11A	96906	158	61
MS25010A11A	96906	167	2
MS25010A11A	96906	182	
MS25010A11A	96906	187	16
MS25010A11A	96906	187	23
MS25010A11A	96906	187	[illegible]29
MS25010A11A	96906	187	3
MS25010A11A	96906	187	3[illegible]
MS25010A11A	96906	187	45
MS25010A11A	96906	187	51
MS25010A11A	96906	187	9
MS25010A11A	96906	199	18
MS25010A11A	96906	199	5
MS25010A11A	96906	201	103
MS25010A11A	96906	201	20
MS25010A11A	96906	201	39
MS25010A11A	96906	201	4
MS25010A11A	96906	201	47
MS25010A11A	96906	201	56

REFERENCE NUMBER	MFG CODE	FIG NUMBER	ITEM NUMBER
MS25010A11A	9690[illegible]5	201	67
MS25010A11A	9690 5	201	81
MS25010A11A	9690 6	201	91
MS25010A11A327	9690 6	183A	75
MS25010B11A	9690[illegible]6	183	3
MS25010B11A	9690[illegible]6	187	29
MS25010C	9690[illegible]6	184	58
MS25027-1	9690[illegible]6	188	13
MS25027-2	969 06	188	30
MS25027-2	969 06	196	50
MS25027-2	969 06	196	54
MS25028-1	969 06	BULK	
MS25035-1	969 06	188	36
MS25036-101	969 06	197	
MS25036-101	969 06	BULK	
MS25036-101	969 06	BULK	
MS25036-102	969[illegible]06	BULK	
MS25036-102	96 906	182A	41A
MS25036-103	96 906	BULK	
MS25036-106	96[illegible]906	BULK	
MS25036-107	9 6906	BULK	
MS25036-108	9 6906	BULK	
MS25036-110	[illegible]6906	BULK	
MS25036-111	[illegible]96906	BULK	
MS25036-112	96906	197	
MS25036-113	96906	BULK	
MS25036-115	96906	BULK	
MS25036-116	96906	BULK	
MS25036-117	96906	BULK	
MS25036-120	96906	BULK	
MS25036-122	96906	BULK	
MS25036-125	96906	BULK	
MS25036-145	96906	210	101
MS25036-145	96906	BULK	
MS25036-145	96906	189A	23
MS25036-148	96906	183	
MS25036-148	96906	194	58
MS25036-148	96906	BULK	
MS25036-149	96906	BULK	
MS25036-150	96906	210	52
MS25036-150	96906	BULK	
MS25036-153	96906	190	10
MS25036-15[illegible]3	96906	210	17
MS25036-15 3	96906	BULK	
MS25036-1[illegible]56	96906	BULK	
MS25036-1 57	96906	BULK	
MS25036-1 .8	96906	BULK	
MS25036- 2	96906	277	
MS25036- .49	96906	210	51
MS25036 -52	96906	192	89
MS25036 .-9	96906	BULK	
MS2503 9-1	96906	275	
MS250 .1-2	96906	BULK	
MS250 41-3	96906	157	43
MS250 .41-3	96906	158	39
MS25 041-3	96906	167	48
MS25 041-4	96906	167	49
MS2 5041-4	96906	201	49
MS2 5041-6	96906	201	58
MS 25041-6	96906	201	7
MS 25041-7	96906	167	51
M 525041-7	96906	201	8
M S25041-8	96906	167	52
MS25041-8	96906	196	
MS25041-8 -327	96906	196	
MS25042-1 .2C	96906	BULK	
MS25042- 14C	96906	62	
MS25042- 14C	96906	QC1	
MS25043- 16D	96906	BULK	
MS25054- 1B	96906	275	23
MS25054- 1B	96906	BULK	
MS25055-1B	96906	275	24
MS25055-1B	96906	BULK	
MS25056-1B	96906	275	25
MS25056-1B	96906	BULK	
MS25069-1495	96906	188	
MS25069-1495	96906	188	18D
MS25069-1495	96906	188	31
MS25069-1495	96906	196	
MS25081-1	96906	183A	79
MS25082-1	96906	188	
MS25082-1	96906	228	
MS25082-1	96906	BULK	
MS25082-3	96906	228	
MS25082-3	96906	228	83
MS25082-3	96906	228	85
MS25082-3	96906	BULK	
MS25082-8	96906	183	3C
MS25082-8	96906	183A	76
MS25082-8	96906	197A	13
MS25082B20	96906	BULK	
MS25083-1AD10	96906	15	
MS25083-2AA12	96906	232	4
MS25083-2AA3	96906	18	
MS25083-2AA4	96906	18	
MS25083-2AA4	96906	33	
MS25083-2AA6	96906	18	
MS25083-2AB12	96906	11	122B
MS25083-2AB12	96906	KITS	
MS25083-2AB3	96906	28	
MS25083-2AB3	96906	213	
MS25083-2AB3	96906	220	
MS25083-2AB3	96906	KITS	
MS25083-2AB4	96906	18	
MS25083-2AB4	96906	33	
MS25083-2AB4	96906	188	
MS25083-2AB5	96906	18	
MS25083-2AB5	96906	KITS	
MS25083-2AB6	96906	31	
MS25083-2AB7	96906	18	
MS25083-2AB7	96906	32	
MS25083-2AB9	96906	32	
MS25083-2AD10	96906	15	
MS25083-2BA4	96906	213	
MS25083-2BB10	96906	32	
MS25083-2BB11	96906	117	
MS25083-2BB2	96906	116	
MS25083-2BB3	96906	95	144
MS25083-2BB3	96906	116	
MS25083-2BB3	96906	119	
MS25083-2BB3	96906	213	
MS25083-2BB3	96906	220	
MS25083-2BB3	96906	221	18
MS25083-2BB3	96906	221	21
MS25083-2BB3	96906	221	23
MS25083-2BB3	96906	221	78
MS25083-2BB3	96906	KITS	
MS25083-2BB4	96906	109	
MS25083-2BB4	96906	112	28
MS25083-2BB4	96906	112	32
MS25083-2BB4	96906	112	41
MS25083-2BB4	96906	112	45
MS25083-2BB4	96906	112	69
MS25083-2BB4	96906	112	91
MS25083-2BB4	96906	117	
MS25083-2BB4	96906	119	
MS25083-2BB4	96906	213	
MS25083-2BB4	96906	220	
MS25083-2BB4	96906	220	11
MS25083-2BB4	96906	220	39
MS25083-2BB4	96906	221	10
MS25083-2BB4	96906	221	102

REFERENCE NUMBER	MFG CODE	FIG NUMBER	ITEM NUMBER
MS25083-2BB4	96906	221	13
MS25083-2BB4	96906	221	138
MS25083-2BB4	96906	221	23
MS25083-2BB4	96906	221	40
MS25083-2BB4	96906	221	55
MS25083-2BB4	96906	221	68
MS25083-2BB4	96906	221	72
MS25083-2BB4	96906	221	75
MS25083-2BB4	96906	KITS	
MS25083-2BB5	96906	117	
MS25083-2BB5	96906	221	114
MS25083-2BB5	96906	221	116
MS25083-2BB6	96906	31	
MS25083-2BB6	96906	117	
MS25083-2BB6	96906	119	
MS25083-2BB6	96906	188	51
MS25083-2BB6	96906	196	14
MS25083-2BB6	96906	221	21
MS25083-2BB6	96906	221	83
MS25083-2BB6	96906	257	10
MS25083-2BB6	96906	KITS	
MS25083-2BB7	96906	119	
MS25083-2BB8	96906	117	
MS25083-2BC29	96906	219A	77
MS25083-2BC30	96906	219A	182
MS25083-2BC31	96906	218	62B
MS25083-2BC31	96906	218	64A
MS25083-2BC31	96906	218	69B
MS25083-2BC37	96906	218	68B
MS25085-1	96906	190	109
MS25085-1	96906	190	54
MS25089-3C	96906	188	39
MS25089-3GR	96906	167	8
MS25089-3GR	96906	201	14
MS25089-4AR	96906	205	11
MS25089-4AR	96906	205	25
MS25160-1	96906	83	35C
MS25165-1	96906	167	44
MS25165-1	96906	201	102
MS25165-1	96906	201	28
MS25165-1	96906	201	3
MS25165-1	96906	201	71
MS25165-1	96906	201	80
MS25171-1S	96906	189A	22
MS25171-2S	96906	BULK	
MS25171-3S	96906	275	
MS25171-3S	96906	KITS	
MS25171-4S	96906	KITS	
MS25181-1	96906	191	
MS25181-1	96906	277	
MS25181-2	96906	BULK	
MS25181-3	96906	BULK	
MS25182-2	96906	207	13
MS25182-2	96906	208	16
MS25183A10SL3S	96906	BULK	
MS25183A10SL4S	96906	BULK	
MS25183A12-5S	96906	BULK	
MS25190A12	96906	BULK	
MS25190A16	96906	BULK	
MS25190A20	96906	BULK	
MS25190A22	96906	BULK	
MS25190B10	96906	BULK	
MS25190B12	96906	BULK	
MS25190B14	96906	BULK	
MS25190B16	96906	BULK	
MS25190B18	96906	BULK	
MS25190B2	96906	BULK	
MS25190B20	96906	BULK	
MS25190B22	96906	BULK	
MS25190B4	96906	BULK	
MS25190B6	96906	BULK	

REFERENCE NUMBER	MFG CODE	FIG NUMBER	ITEM NUMBER
MS25190B8	96906	BULK	
MS25190C16	96906	BULK	
MS25190C18	96906	BULK	
MS25191-4B	96906	BULK	
MS25192B181	96906	BULK	
MS25192B182	96906	BULK	
MS25192B201	96906	BULK	
MS25192B202	96906	BULK	
MS25192B203	96906	BULK	
MS25192B223	96906	BULK	
MS25201-4	96906	201	12
MS25201-4	96906	201	94
MS25201-6	96906	187	12
MS25201-6	96906	187	5
MS25201-6	96906	188	38
MS25201-6	96906	196	5
MS25206-246	96906	278	
MS25224-1	96906	187	21
MS25224-1	96906	187	27
MS25225-3	96906	201	19
MS25226-2-16	96906	182	
MS25226-2-2	96906	182	
MS25226-2-2	96906	204	
MS25226-2-2	96906	277	23
MS25226-2-3	96906	182	
MS25226-2-4	96906	182	
MS25226-2-4	96906	277	24
MS25226-2-5	96906	157	83
MS25226-2-5	96906	158	66
MS25226-2-5	96906	275	
MS25226-2-6	96906	277	25
MS25226-2-8	96906	182	
MS25226-4-2	96906	BULK	
MS25226-4-3	96906	BULK	
MS25226-4-6	96906	BULK	
MS25227-1A	96906	196	21C
MS25227-2A	96906	277	
MS25227-3A	96906	204	
MS25227-3A	96906	BULK	
MS25227-4A	96906	204	
MS25231-313	96906	157	42
MS25231-313	96906	158	38
MS25231-313	96906	188	18D
MS25231-313	96906	188	26A
MS25235R311	96906	188	
MS25235R311	96906	188	18B
MS25235R311	96906	196	
MS25235R311	96906	204	
MS25237-327	96906	157	15
MS25237-327	96906	157	18
MS25237-327	96906	157	24
MS25237-327	96906	157	33
MS25237-327	96906	157	44
MS25237-327	96906	157	50
MS25237-327	96906	157	56
MS25237-327	96906	157	6
MS25237-327	96906	157	62
MS25237-327	96906	157	64
MS25237-327	96906	158	16
MS25237-327	96906	158	26
MS25237-327	96906	158	33
MS25237-327	96906	158	39
MS25237-327	96906	158	45
MS25237-327	96906	158	51
MS25237-327	96906	158	57
MS25237-327	96906	158	6
MS25237-327	96906	158	60
MS25237-327	96906	167	15
MS25237-327	96906	167	3
MS25237-327	96906	182	
MS25237-327	96906	183	4

REFERENCE NUMBER	MFG CODE	FIG NUMBER	ITEM NUMBER
MS25237-327	96906	184	58
MS25237-327	96906	187	16
MS25237-327	96906	187	23
MS25237-327	96906	187	29
MS25237-327	96906	187	3
MS25237-327	96906	187	39
MS25237-327	96906	187	45
MS25237-327	96906	187	51
MS25237-327	96906	187	9
MS25237-327	96906	188	
MS25237-327	96906	188	18A
MS25237-327	96906	196	
MS25237-327	96906	199	
MS25237-327	96906	199	18
MS25237-327	96906	199	30
MS25237-327	96906	201	103
MS25237-327	96906	201	20
MS25237-327	96906	201	29
MS25237-327	96906	201	39
MS25237-327	96906	201	4
MS25237-327	96906	201	47
MS25237-327	96906	201	56
MS25237-327	96906	201	58
MS25237-327	96906	201	67
MS25237-327	96906	201	8
MS25237-327	96906	201	81
MS25237-327	96906	201	91
MS25237-327	96906	202	2
MS25237-327	96906	203	30
MS25237-327	96906	204	
MS25237-327	96906	182A	19
MS25237-327	96906	197A	4
MS25241-4581	96906	188	
MS25241-4581	96906	190	20
MS25244-10	96906	198	10
MS25244-10	96906	199	21
MS25244-10	96906	199	34
MS25244-10	96906	199	8
MS25244-10	96906	209	8
MS25244-15	96906	209	6
MS25244-20	96906	BULK	
MS25244-25	96906	198	11
MS25244-25	96906	199	9
MS25244-25	96906	209	9
MS25244-35	96906	199	10
MS25244-35	96906	209	5
MS25244-5	96906	196	63
MS25244-5	96906	198	18A
MS25244-5	96906	198	8
MS25244-5	96906	198	9
MS25244-5	96906	199	20
MS25244-5	96906	199	32
MS25244-5	96906	199	7
MS25244-5	96906	209	7
MS25244-50	96906	199	11
MS25244-50	96906	209	4
MS25244-7	96906	198	9A
MS25244-7	96906	199	
MS25244-7	96906	199	33
MS25244-7	96906	209	13
MS25253-1	96906	167	21
MS25253-1	96906	183	40
MS25253-1	96906	205	27
MS25253-1	96906	226	53
MS25274-2	96906	201	
MS25274-2	96906	BULK	
MS25274-3	96906	BULK	
MS25309-7512	96906	204	
MS25313A201	96906	BULK	
MS25313A202	96906	BULK	
MS25313A203	96906	BULK	
MS25313A221	96906	BULK	
MS25313A222	96906	BULK	
MS25331-7	96906	157	41
MS25331-7	96906	158	38
MS25338-7079	96906	197	67
MS25358-3	96906	188	
MS25358-3	96906	196	
MS25358-3	96906	204	
MS25358-4	96906	188	
MS25358-4	96906	196	
MS25358-4	96906	204	
MS25358-5	96906	188	
MS25358-5	96906	196	
MS25358-5	96906	204	
MS25358-6	96906	188	
MS25358-6	96906	196	
MS25358-6	96906	204	
MS25358-8	96906	188	29
MS25358-8	96906	196	42
MS25358-8	96906	204	30
MS25381-1	96906	184	57
MS25381-1	96906	187	10
MS25381-1	96906	187	17
MS25381-1	96906	187	28
MS25381-1	96906	201	15
MS25381-1	96906	201	25
MS25381-1	96906	201	51
MS25435-27	96906	BULK	
MS25454-3	96906	157	51
MS25454-3	96906	158	46
MS26556-1	96906	34	7
MS27039-0806	96906	BULK	
MS27039-0809	96906	BULK	
MS27039-0815	96906	37	
MS27039-0815	96906	KITS	
MS27039-1-05	96906	BULK	
MS27039-1-06	96906	18	
MS27039-1-07	96906	BULK	
MS27039-1-08	96906	13	15
MS27039-1-08	96906	32	79
MS27039-1-09	96906	KITS	
MS27039-1-10	96906	18	
MS27039-1-10	96906	33	23
MS27039-1-10	96906	279	
MS27039-1-10	96906	KITS	
MS27039-1-11	96906	13	30
MS27039-1-11	96906	13	60
MS27039-1-11	96906	13	81
MS27039-1-11	96906	34	
MS27039-1-12	96906	18	
MS27039-1-12	96906	32	
MS27039-1-13	96906	18	
MS27039-1-14	96906	BULK	
MS27039-1-15	96906	31	
MS27039-4-08	96906	F18	27
MS27039-4-12	96906	18	
MS27039-4-12	96906	18	71
MS27039-4-12	96906	18	75
MS27039-4-12	96906	KITS	
MS27039-4-13	96906	18	
MS27039-4-20	96906	76	156A
MS27039C0819	96906	228	129E
MS27039C1-07	96906	70	3
MS27039C1-09	96906	13	21
MS27039C1-09	96906	13	46
MS27039C1-09	96906	13	72
MS27039C1-10	96906	18	42A
MS27039C1-10	96906	18	45A
MS27039C1-12	96906	13	29
MS27039C1-12	96906	13	58
MS27039C1-12	96906	13	80

REFERENCE NUMBER	MFG CODE	FIG NUMBER	ITEM NUMBER
MS27039C1-12	96906	70	2
MS27039C1-12	96906	KITS	
MS27039C1-27	96906	32	37
MS27039DD1-16	96906	BULK	
MS27039DD1-18	96906	BULK	
MS27039DD4-10	96906	13	92
MS27039DD4-11	96906	BULK	
MS27039DD4-13	96906	13	65A
MS27039DD4-13	96906	13	90A
MS27039DD4-18	96906	18	
MS27053-10C	96906	BULK	
MS27053-12C	96906	BULK	
MS27053-16	96906	BULK	
MS27053-16C	96906	BULK	
MS27053-4C	96906	BULK	
MS27053-4C	96906	KITS	
MS27053-6C	96906	BULK	
MS27053-6C	96906	KITS	
MS27055-10	96906	BULK	
MS27055-10C	96906	BULK	
MS27055-10C	96906	KITS	
MS27057-12C	96906	KITS	
MS27057-16	96906	BULK	
MS27059-4C	96906	BULK	
MS27059-4C	96906	KITS	
MS27059-5C	96906	BULK	
MS27059-6C	96906	BULK	
MS27059-6C	96906	KITS	
MS27060-4C	96906	BULK	
MS27060-4C	96906	KITS	
MS27060-6C	96906	BULK	
MS27060-6C	96906	KITS	
MS27061-16	96906	BULK	
MS27062-12C	96906	BULK	
MS27062-8C	96906	BULK	
MS27063-10C	96906	BULK	
MS27063-12	96906	BULK	
MS27065-10	96906	BULK	
MS27065-10C	96906	BULK	
MS27065-12	96906	BULK	
MS27065-12C	96906	BULK	
MS27065-20C	96906	BULK	
MS27067-4C	96906	BULK	
MS27067-5C	96906	BULK	
MS27067-6C	96906	BULK	
MS27068-4C	96906	BULK	
MS27068-5C	96906	BULK	
MS27068-6C	96906	BULK	
MS27068-8C	96906	BULK	
MS27069-5C	96906	BULK	
MS27070-20C	96906	BULK	
MS27070-5C	96906	BULK	
MS27111-7	96906	118	84
MS27130-13	96906	BULK	
MS27130-19K	96906	20	
MS27130-20K	96906	19	
MS27130-20K	96906	BULK	
MS27130-21K	96906	BULK	
MS27130-24K	96906	BULK	
MS27130-25K	96906	BULK	
MS27130-27K	96906	BULK	
MS27183-10	96906	197A	17
MS27183-11	96906	265	302
MS27183-11	96906	265	310
MS27183-11	96906	268	262
MS27183-14	96906	KITS	
MS27183-15	96906	60	43
MS27183-15	96906	61	45
MS27183-4	96906	20	85
MS27183-4	96906	20	98
MS27183-4	96906	185	4
MS27183-4	96906	193	9
MS27183-4	96906	197	55
MS27183-4	96906	198	
MS27183-4	96906	205	28C
MS27183-4	96906	215	49
MS27183-4	96906	252	7
MS27183-4	96906	263	18
MS27183-5	96906	182A	41
MS27183-5	96906	197A	11
MS27183-5	96906	197A	16
MS27212-1-10	96906	191	
MS27212-1-10	96906	195	
MS27212-1-10	96906	275	
MS27212-1-15	96906	277	16
MS27212-1-16	96906	182	23
MS27212-1-2	96906	188	27
MS27212-1-2	96906	204	
MS27212-1-20	96906	182	
MS27212-1-20	96906	182	22
MS27212-1-20	96906	182	26
MS27212-1-20	96906	204	
MS27212-1-20	96906	277	18
MS27212-1-20	96906	277	20
MS27212-1-20	96906	277	21
MS27212-1-20	96906	BULK	
MS27212-1-3	96906	204	
MS27212-1-5	96906	196	21
MS27212-1-5	96906	275	
MS27212-1-7	96906	157	84
MS27212-1-8	96906	195	
MS27212-1-8	96906	204	12
MS27212-1-8	96906	228	
MS27212-2-10	96906	204	
MS27212-2-16	96906	BULK	
MS27212-2-6	96906	198	40
MS27212-2-6	96906	204	
MS27212-2-8	96906	188	24
MS27224-10	96906	BULK	
MS27224-16	96906	BULK	
MS27224-6	96906	BULK	
MS27226-16	96906	BULK	
MS27253-1	96906	42B	
MS27363E0220	96906	BULK	
MS27369E0116	96906	117	11
MS27369E0116	96906	117	5
MS27369E0122	96906	119	188
MS27369E0130	96906	117	13
MS27369E0132	96906	119	187
MS27369E0134	96906	117	7
MS27369E0150	96906	119	
MS27369E0154	96906	109	2
MS27369E0160	96906	139	60
MS27369E0170	96906	119	137
MS27369E0176	96906	119	140
MS27369E0204	96906	109	41
MS27369E0300	96906	119	178
MS27369E0310	96906	119	206
MS27369E0320	96906	119	179
MS27369E0324	96906	119	207
MS27369E0360	96906	119	173
MS27369G0090	96906	116	17
MS27369G0130	96906	116	10
MS27369G0130	96906	116	8
MS27369G0154	96906	109	4
MS27369G0200	96906	139	3
MS27369G0274	96906	112	2
MS27369G0330	96906	139	56
MS27369H0130	96906	117	80
MS27369H0140	96906	129	112
MS27370E0134	96906	129	55

REFERENCE NUMBER	MFG CODE	FIG NUMBER	ITEM NUMBER
MS27371E0156	96906	129	24
MS27371E0200	96906	129	139
MS27371E0220	96906	117	76
MS27371E0460	96906	269	3
MS27371H0300	96906	117	73
MS27381-10	96906	BULK	
MS27381-10	96906	KITS	
MS27381-12	96906	BULK	
MS27381-12	96906	KITS	
MS27381-16	96906	BULK	
MS27381-16	96906	KITS	
MS27381-4C	96906	BULK	
MS27381-4C	96906	KITS	
MS27381-6C	96906	BULK	
MS27381-6C	96906	KITS	
MS27381-8	96906	BULK	
MS27381-8	96906	KITS	
MS27381-8C	96906	BULK	
MS27382-10	96906	BULK	
MS27382-10	96906	KITS	
MS27382-12	96906	BULK	
MS27382-12	96906	KITS	
MS27382-16	96906	BULK	
MS27382-16	96906	KITS	
MS27383-10	96906	BULK	
MS27383-10	96906	KITS	
MS27383-12	96906	BULK	
MS27383-12	96906	KITS	
MS27383-16	96906	BULK	
MS27383-16	96906	KITS	
MS27384-4C	96906	BULK	
MS27384-4C	96906	KITS	
MS27384-6C	96906	BULK	
MS27384-8	96906	BULK	
MS27384-8	96906	KITS	
MS27385-4C	96906	BULK	
MS27385-4C	96906	KITS	
MS27385-6C	96906	BULK	
MS27385-6C	96906	KITS	
MS27385-8	96906	BULK	
MS27385-8	96906	KITS	
MS27407-1	96906	201	12
MS27407-1	96906	201	94
MS27407-2	96906	201	61
MS27407-3	96906	187	12
MS27407-3	96906	187	19
MS27407-3	96906	188	38
MS27407-3	96906	196	5
MS27408-4M	96906	187	30
MS27429-3	96906	BULK	
MS27576-3-25	96906	223	86
MS27576-4-14	96906	66	16
MS27576-4-14	96906	66	5
MS27576-4-15	96906	222	18
MS27576-4-15	96906	223	12
MS27576-4-16	96906	223	11
MS27576-4-16	96906	223	35
MS27576-4-16	96906	228	129C
MS27576-4-17	96906	223	34
MS27576-4-17	96906	223	6
MS27576-4-18	96906	223	19
MS27576-4-18	96906	223	26
MS27576-4-18	96906	KITS	
MS27576-4-19	96906	223	5
MS27576-4-31	96906	222	19
MS27576-4-37	96906	222	14
MS27576-4-39	96906	222	14
MS27576-4-39	96906	223	139
MS27576-5-106	96906	223	207
MS27576-5-17	96906	242	31
MS27576-5-20	96906	242	23
MS27576-5-20	96906	242	32
MS27576-5-20	96906	243	1
MS27576-5-23	96906	242	30
MS27576-5-24	96906	242	29
MS27576-5-26	96906	223	150
MS27576-5-35	96906	242	35
MS27576-5-47	96906	223	127
MS27576-5-53	96906	223	80
MS27576-5-81	96906	223	192
MS27576-6-34	96906	242	34
MS27576-6-46	96906	223	56
MS27576-6-82	96906	243	9
MS27576-7-113	96906	243	22
MS27576-7-50	96906	243	15
MS27641-10	96906	240	83
MS27641-10	96906	428	57
MS27641-12	96906	239	46
MS27641-12	96906	239	80
MS27641-4	96906	223	143
MS27641-4	96906	226	30
MS27641-4	96906	228	166
MS27641-4	96906	228	179
MS27641-4	96906	228	190
MS27641-4	96906	265	245
MS27641-4	96906	265	247
MS27641-4	96906	265	252
MS27641-4	96906	268	174
MS27641-4	96906	268	191
MS27641-4	96906	268	212
MS27641-5	96906	71	134
MS27641-5	96906	223	133
MS27641-5	96906	223	200
MS27641-5	96906	223	217
MS27641-6	96906	223	59
MS27641-8	96906	222	123
MS27641-8	96906	222	135
MS27641-8	96906	237	16
MS27641-8	96906	237	44
MS27641-8	96906	239	126
MS27641-8	96906	239	149
MS27641-8	96906	239	178
MS27642-21	96906	238	29
MS27642-21	96906	239	113
MS27642-21	96906	239	142
MS27642-21	96906	239	160
MS27642-21	96906	240	64
MS27642-21	96906	240	71
MS27642-21	96906	240	89
MS27642-21	96906	240	95
MS27642-21	96906	240	98
MS27642-23	96906	238	24
MS27642-49	96906	265	300
MS27642-49	96906	265	311
MS27642-49	96906	268	260
MS27645-3A	96906	228	
MS27645-3A	96906	234	12
MS27645-3A	96906	234	47
MS27645-3A	96906	234	58
MS27645-3A	96906	245	
MS27645-3A	96906	245	3
MS27645-4	96906	428	54
MS27645-4A	96906	224	27
MS27645-4A	96906	246	8A
MS27645-5A	96906	229	14
MS27708-3	96906	226	40
MS27758-1	96906	34	
MS27885-009		KITS	
MS27975-1	96906	BULK	
MS27975-2	96906	25	
MS27976-10	96906	24	
MS27976-12	96906	BULK	

REFERENCE NUMBER	MFG CODE	FIG NUMBER	ITEM NUMBER
MS27977-1B	96906	37	
MS27977-2N	96906	BULK	
MS27977-2N	96906	KITS	
MS27977-29N	96906	BULK	
MS27977-3B	96906	36	
MS27977-3N	96906	32	18
MS27977-3N	96906	37	
MS27982-2N	96906	BULK	
MS28005-3	96906	62	5A
MS28005-5	96906	117	77
MS28005-5	96906	129	137
MS28005-5	96906	129	56
MS28005-8	96906	117	77
MS28005-8	96906	129	137
MS28005-8	96906	129	56
MS28009-1	96906	167	31
MS28010-3	96906	167	32
MS28010-5	96906	167	36
MS28021-4	96906	157	19
MS28021-4	96906	158	21
MS28027-1	96906	158	28
MS28028-1	96906	188	64
MS28041-1	96906	157	9
MS28041-1B	96906	157	9A
MS28041-1B	96906	158	10
MS28041W1	96906	157	9
MS28041W1	96906	158	10
MS28042-1	96906	167	41
MS28042-1	96906	201	59
MS28042-1	96906	KITS	
MS28042-2	96906	157	4
MS28042-2	96906	158	4
MS28042-2	96906	KITS	
MS28042-3	96906	KITS	
MS28044-1	96906	157	57
MS28044L1A	96906	157	57
MS28044L1A	96906	158	52
MS28045T1	96906	158	21
MS28045T2	96906	158	21
MS28105-10	96906	165	40
MS28105-17	96906	170	11
MS28105-17	96906	171	13
MS28700-5	96906	119	393
MS28741-12-0300	96906	218	67
MS28741-16-0154	96906	218	71
MS28741-16-0164	96906	221	108
MS28741-16-0224	96906	219	73
MS28741-16-0224	96906	219A	192
MS28741-16-0240	96906	219	26
MS28741-16-0240	96906	219	72
MS28741-16-0240	96906	219A	191
MS28741-16-0240	96906	219A	98
MS28741-16-0266	96906	218	72A
MS28741-16-0276	96906	211	10
MS28741-16-0322	96906	221	126
MS28741-6-0096	96906	221	129
MS28741-6-0170	96906	219	31
MS28741-6-0170	96906	221	80
MS28741-6-0170	96906	221	87
MS28741-6-0170	96906	257	
MS28741-6-0170	96906	219A	100
MS28741-6-0196	96906	221	131
MS28772-339		KITS	
MS28772-339	96906	51	54
MS28773-04	96906	139	113
MS28774-006		KITS	
MS28774-007		KITS	
MS28774-007	96906	272	34
MS28774-008	96906	133	4
MS28774-009		KITS	
MS28774-009	96906	124	48
MS28774-009	96906	132	36
MS28774-010		KITS	
MS28774-010		KITS	
MS28774-010	96906	59	16D
MS28774-010	96906	122	46
MS28774-010	96906	123	15
MS28774-010	96906	125	30
MS28774-010	96906	125	34
MS28774-010	96906	125	39
MS28774-010	96906	125	43
MS28774-010	96906	126	2
MS28774-010	96906	127	7
MS28774-010	96906	128	19A
MS28774-010	96906	130	31
MS28774-010	96906	133	49
MS28774-010	96906	142	3
MS28774-010	96906	151	10
MS28774-011		KITS	
MS28774-011	96906	49	39
MS28774-011	96906	122	17
MS28774-011	96906	122	33
MS28774-011	96906	124	18
MS28774-011	96906	127	2
MS28774-011	96906	130	21
MS28774-011	96906	136	14
MS28774-011	96906	151	16
MS28774-012		KITS	
MS28774-012		KITS	
MS28774-012		KITS	
MS28774-012	96906	49	4
MS28774-012	96906	123	2
MS28774-012	96906	125	14
MS28774-012	96906	126	2
MS28774-012	96906	127	4
MS28774-012	96906	128	19A
MS28774-012	96906	142	3
MS28774-012	96906	153	22
MS28774-012	96906	KITS	
MS28774-013		KITS	
MS28774-013	96906	121	21
MS28774-013	96906	124	34
MS28774-013	96906	124	40
MS28774-013	96906	124	54
MS28774-013	96906	127	10
MS28774-013	96906	137	31
MS28774-014		KITS	
MS28774-014	96906	63	15
MS28774-014	96906	124	58
MS28774-015	96906	123	18
MS28774-015	96906	140	21
MS28774-015	96906	141	
MS28774-015	96906	142	10
MS28774-016		KITS	
MS28774-016	96906	63	29
MS28774-016	96906	125	16
MS28774-016	96906	125	21
MS28774-016	96906	130	27
MS28774-016	96906	133	10
MS28774-016	96906	152	3
MS28774-016	96906	153	9
MS28774-016	96906	156	2
MS28774-017	96906	123	12
MS28774-018		KITS	
MS28774-018	96906	67	15
MS28774-018	96906	120	20
MS28774-018	96906	127	13
MS28774-018	96906	128	35
MS28774-018	96906	146	5
MS28774-018	96906	153	3
MS28774-018	96906	224	38
MS28774-019		KITS	

REFERENCE NUMBER	MFG CODE	FIG NUMBER	ITEM NUMBER
MS28774-019	96906	124	28
MS28774-019	96906	124	51
MS28774-019	96906	127	17
MS28774-020		KITS	
MS28774-020	96906	130	9
MS28774-020	96906	132	38
MS28774-020	96906	136	18
MS28774-021		KITS	
MS28774-021	96906	132	22
MS28774-021	96906	132	31
MS28774-021	96906	146	26
MS28774-022		124	73
MS28774-022		KITS	
MS28774-022	96906	65	8
MS28774-023	96906	BULK	
MS28774-026	96906	117	
MS28774-026	96906	129	
MS28774-028	96906	142	1
MS28774-111		KITS	
MS28774-111	96906	124	76
MS28774-111	96906	133	52
MS28774-111	96906	137	25
MS28774-111	96906	137	37
MS28774-112	96906	133	24
MS28774-114	96906	144	10
MS28774-115	96906	137	23
MS28774-116	96906	133	58
MS28774-121		KITS	
MS28774-121	96906	126	12
MS28774-121	96906	128	16
MS28774-124	96906	BULK	
MS28774-125		KITS	
MS28774-125	96906	126	12
MS28774-125	96906	128	16
MS28774-126	96906	102	68
MS28774-128	96906	102	42
MS28774-128	96906	103	35
MS28774-131	96906	102	52
MS28774-131	96906	103	45
MS28774-132		KITS	
MS28774-132	96906	124	21
MS28774-136	96906	102	46
MS28774-136	96906	103	39
MS28774-142	96906	BULK	
MS28774-16	96906	122	24
MS28774-16	96906	122	40
MS28774-210		KITS	
MS28774-210	96906	59	18
MS28774-210	96906	132	26
MS28774-210	96906	146	29
MS28774-211	96906	133	13
MS28774-212	96906	144	3
MS28774-213		KITS	
MS28774-213	96906	49	26
MS28774-213	96906	59	15
MS28774-213	96906	136	2
MS28774-214	96906	73	37
MS28774-216		KITS	
MS28774-216	96906	47	15A
MS28774-218		KITS	
MS28774-219	96906	133	72
MS28774-220		KITS	
MS28774-220	96906	47	9A
MS28774-220	96906	102	6
MS28774-220	96906	102	68
MS28774-220	96906	103	6
MS28774-221	96906	74	57
MS28774-233	96906	74	33
MS28774-237	96906	74	52
MS28774-240		KITS	
MS28774-240	96906	51	51
MS28774-326		KITS	
MS28774-326	96906	57	7A
MS28774-326	96906	272	55
MS28774-328		KITS	
MS28774-328	96906	53	23
MS28774-328	96906	54	47
MS28774-332		KITS	
MS28774-332	96906	51	62
MS28774-333		KITS	
MS28774-333	96906	53	16
MS28774-333	96906	54	39
MS28774-336		KITS	
MS28774-336	96906	53	18
MS28774-336	96906	54	36
MS28774-339		KITS	
MS28774-339	96906	51	55
MS28774-344		KITS	
MS28774-344	96906	272	48
MS28774-344	96906	272	53
MS28775-004		KITS	
MS28775-004	96906	52	12
MS28775-004	96906	105	12
MS28775-004	96906	122	16
MS28775-005		KITS	
MS28775-005	96906	124	37
MS28775-005	96906	128	39
MS28775-006		KITS	
MS28775-006	96906	121	19
MS28775-006	96906	121	23
MS28775-006	96906	124	10
MS28775-006	96906	124	67
MS28775-006	96906	125	45
MS28775-006	96906	133	40
MS28775-006	96906	133	53
MS28775-006	96906	133	7
MS28775-006	96906	136	5
MS28775-006	96906	147	8
MS28775-006	96906	153	21
MS28775-006	96906	170	50
MS28775-006	96906	171	50
MS28775-006	96906	224	48A
MS28775-006	96906	247	22
MS28775-006	96906	272	8
MS28775-007		KITS	
MS28775-007	96906	65	39
MS28775-007	96906	272	35
MS28775-007	96906	272	8
MS28775-008		KITS	
MS28775-008	96906	18	132A
MS28775-008	96906	65	29
MS28775-008	96906	133	25
MS28775-008	96906	133	5
MS28775-008	96906	133	65
MS28775-008	96906	134	48
MS28775-008	96906	224	32
MS28775-009		KITS	
MS28775-009	96906	124	47
MS28775-009	96906	130	4
MS28775-009	96906	132	35
MS28775-009	96906	148	15
MS28775-009	96906	154	8
MS28775-010		KITS	
MS28775-010		KITS	
MS28775-010		KITS	
MS28775-010	96906	52	
MS28775-010	96906	57	9
MS28775-010	96906	59	16E
MS28775-010	96906	65	17
MS28775-010	96906	65	36
MS28775-010	96906	73	60
MS28775-010	96906	73	62

REFERENCE NUMBER	MFG CODE	FIG NUMBER	ITEM NUMBER
MS28775-010	96906	105	27
MS28775-010	96906	113	7
MS28775-010	96906	122	47
MS28775-010	96906	123	14
MS28775-010	96906	124	15
MS28775-010	96906	125	29
MS28775-010	96906	125	33
MS28775-010	96906	125	38
MS28775-010	96906	125	42
MS28775-010	96906	126	14
MS28775-010	96906	126	3
MS28775-010	96906	127	8
MS28775-010	96906	128	13
MS28775-010	96906	128	19
MS28775-010	96906	130	32
MS28775-010	96906	132	14
MS28775-010	96906	133	39
MS28775-010	96906	133	48
MS28775-010	96906	142	4
MS28775-010	96906	146	18
MS28775-010	96906	148	3
MS28775-010	96906	151	9
MS28775-010	96906	183	35
MS28775-010	96906	247	2
MS28775-010	96906	265	116
MS28775-010	96906	265	118
MS28775-010	96906	265	120
MS28775-010	96906	268	115
MS28775-011		KITS	
MS28775-011	96906	18	132A
MS28775-011	96906	49	39A
MS28775-011	96906	65	42
MS28775-011	96906	65	43
MS28775-011	96906	65	45
MS28775-011	96906	73	40
MS28775-011	96906	102	27
MS28775-011	96906	103	23
MS28775-011	96906	122	18
MS28775-011	96906	122	34
MS28775-011	96906	124	17
MS28775-011	96906	127	3
MS28775-011	96906	130	22
MS28775-011	96906	134	32
MS28775-011	96906	136	15
MS28775-011	96906	138	4
MS28775-011	96906	148	11
MS28775-011	96906	151	15
MS28775-011	96906	265	74
MS28775-011	96906	266	3
MS28775-011	96906	266	30
MS28775-011	96906	266	6
MS28775-011	96906	267	9
MS28775-011	96906	268	44
MS28775-011	96906	272	4
MS28775-012		KITS	
MS28775-012		KITS	
MS28775-012		KITS	
MS28775-012	96906	49	5
MS28775-012	96906	73	46
MS28775-012	96906	105	21
MS28775-012	96906	107	10
MS28775-012	96906	120	18
MS28775-012	96906	123	1
MS28775-012	96906	125	13
MS28775-012	96906	126	3
MS28775-012	96906	127	5
MS28775-012	96906	128	19
MS28775-012	96906	134	18
MS28775-012	96906	134	23
MS28775-012	96906	134	29
MS28775-012	96906	134	37
MS28775-012	96906	135	9
MS28775-012	96906	142	4
MS28775-012	96906	148	5
MS28775-012	96906	148	9
MS28775-012	96906	152	11
MS28775-012	96906	153	23
MS28775-012	96906	156	11
MS28775-012	96906	272	18
MS28775-012	96906	272	22
MS28775-012	96906	272	30
MS28775-012	96906	KITS	
MS28775-013		KITS	
MS28775-013	96906	102	
MS28775-013	96906	103	16A
MS28775-013	96906	121	10
MS28775-013	96906	121	22
MS28775-013	96906	124	33
MS28775-013	96906	124	39
MS28775-013	96906	124	53
MS28775-013	96906	124	62
MS28775-013	96906	127	11
MS28775-013	96906	132	9
MS28775-013	96906	137	30
MS28775-013	96906	146	14
MS28775-013	96906	148	28
MS28775-013	96906	152	8
MS28775-013	96906	153	12
MS28775-013	96906	156	8
MS28775-014		KITS	
MS28775-014	96906	63	16
MS28775-014	96906	124	57
MS28775-014	96906	130	16
MS28775-014	96906	132	3
MS28775-014	96906	140	23
MS28775-014	96906	141	
MS28775-014	96906	142	12
MS28775-014	96906	142	8
MS28775-014	96906	152	7
MS28775-014	96906	156	4
MS28775-015	96906	65	48
MS28775-015	96906	121	17
MS28775-015	96906	123	17
MS28775-015	96906	140	22
MS28775-015	96906	141	
MS28775-015	96906	142	11
MS28775-015	96906	148	10
MS28775-016		KITS	
MS28775-016	96906	49	63
MS28775-016	96906	63	28
MS28775-016	96906	63	36
MS28775-016	96906	65	22
MS28775-016	96906	65	24
MS28775-016	96906	121	4
MS28775-016	96906	122	25
MS28775-016	96906	122	41
MS28775-016	96906	125	15
MS28775-016	96906	125	20
MS28775-016	96906	130	28
MS28775-016	96906	133	9
MS28775-016	96906	134	53
MS28775-016	96906	138	9
MS28775-016	96906	152	4
MS28775-016	96906	153	10
MS28775-016	96906	156	3
MS28775-017	96906	65	27
MS28775-017	96906	103	2
MS28775-017	96906	123	11
MS28775-018		KITS	
MS28775-018	96906	51	43
MS28775-018	96906	53	35
MS28775-018	96906	54	24

REFERENCE NUMBER	MFG CODE	FIG NUMBER	ITEM NUMBER
MS28775-018	96906	63	27
MS28775-018	96906	67	16
MS28775-018	96906	120	19
MS28775-018	96906	122	43
MS28775-018	96906	127	14
MS28775-018	96906	128	34
MS28775-018	96906	146	6
MS28775-018	96906	149	3
MS28775-018	96906	153	4
MS28775-018	96906	224	37
MS28775-018	96906	274	5
MS28775-019		KITS	
MS28775-019	96906	67	4
MS28775-019	96906	124	27
MS28775-019	96906	124	50
MS28775-019	96906	127	18
MS28775-019	96906	134	80
MS28775-019	96906	136	12
MS28775-020		KITS	
MS28775-020	96906	49	44A
MS28775-020	96906	65	21
MS28775-020	96906	102	2
MS28775-020	96906	102	20
MS28775-020	96906	103	18
MS28775-020	96906	130	10
MS28775-020	96906	132	39
MS28775-020	96906	132	8
MS28775-020	96906	136	19
MS28775-020	96906	146	13
MS28775-020	96906	274	9
MS28775-021		KITS	
MS28775-021	96906	65	15
MS28775-021	96906	74	63
MS28775-021	96906	132	23
MS28775-021	96906	132	32
MS28775-021	96906	140	13
MS28775-021	96906	146	27
MS28775-022		KITS	
MS28775-022	96906	65	20
MS28775-022	96906	65	7
MS28775-022	96906	124	72
MS28775-022	96906	127	16
MS28775-022	96906	140	7
MS28775-022	96906	141	20
MS28775-022	96906	224	41
MS28775-022	96906	KITS	
MS28775-023	96906	127	15
MS28775-023	96906	134	12
MS28775-023	96906	148	25
MS28775-023	96906	224	19
MS28775-023	96906	KITS	
MS28775-024	96906	267	19
MS28775-024	96906	274	47
MS28775-025	96906	266	13
MS28775-025	96906	267	6
MS28775-025	96906	190A	4
MS28775-026	96906	117	
MS28775-026	96906	129	
MS28775-026	96906	148	24
MS28775-026	96906	KITS	
MS28775-028		KITS	
MS28775-028	96906	45	31C
MS28775-028	96906	111	3
MS28775-028	96906	142	1A
MS28775-110	96906	73	45
MS28775-111		KITS	
MS28775-111	96906	124	75
MS28775-111	96906	133	51
MS28775-111	96906	133	70
MS28775-111	96906	137	26
MS28775-111	96906	137	38
MS28775-111	96906	224	15
MS28775-112		KITS	
MS28775-112	96906	59	35
MS28775-112	96906	133	23
MS28775-112	96906	154	19
MS28775-113		KITS	
MS28775-113	96906	74	67
MS28775-113	96906	102	10
MS28775-113	96906	103	12
MS28775-113	96906	113	11
MS28775-113	96906	113	5
MS28775-113	96906	134	20
MS28775-113	96906	134	27
MS28775-113	96906	134	35
MS28775-113	96906	247	26
MS28775-113	96906	265	111
MS28775-113	96906	265	114
MS28775-113	96906	268	113
MS28775-114	96906	144	11
MS28775-114	96906	151	8
MS28775-114	96906	224	8
MS28775-115	96906	137	24
MS28775-115	96906	137	28
MS28775-116	96906	102	57
MS28775-116	96906	113	3
MS28775-116	96906	133	57
MS28775-117		KITS	
MS28775-117	96906	102	57
MS28775-117	96906	103	50
MS28775-117	96906	130	7
MS28775-118		KITS	
MS28775-118	96906	47	11
MS28775-118	96906	74	69
MS28775-120		KITS	
MS28775-120	96906	73	49
MS28775-120	96906	126	11
MS28775-120	96906	128	15
MS28775-120	96906	KITS	
MS28775-121		KITS	
MS28775-121	96906	49	65
MS28775-121	96906	247	16
MS28775-122	96906	102	4
MS28775-122	96906	103	4
MS28775-123	96906	73	36
MS28775-123	96906	102	11
MS28775-123	96906	103	13
MS28775-123	96906	107	2
MS28775-123	96906	KITS	
MS28775-124		KITS	
MS28775-124	96906	126	11
MS28775-124	96906	128	15
MS28775-126	96906	74	37
MS28775-126	96906	102	6A
MS28775-127		KITS	
MS28775-127	96906	47	7
MS28775-127	96906	73	27
MS28775-127	96906	73	32
MS28775-128	96906	63	127
MS28775-128	96906	102	43
MS28775-128	96906	103	36
MS28775-128	96906	138	71
MS28775-128	96906	140	11
MS28775-128	96906	151	4
MS28775-128	96906	224	7
MS28775-128	96906	258A	7
MS28775-130		KITS	
MS28775-130	96906	49	7A
MS28775-131		KITS	
MS28775-131	96906	63	101
MS28775-131	96906	102	53
MS28775-131	96906	103	46

REFERENCE NUMBER	MFG CODE	FIG NUMBER	ITEM NUMBER
MS28775-131	96906	134	4
MS28775-132		KITS	
MS28775-132	96906	124	20
MS28775-133	96906	267	42
MS28775-134	96906	72	35
MS28775-134	96906	72	66
MS28775-134	96906	73	11
MS28775-134	96906	139	53C
MS28775-134	96906	KITS	
MS28775-135	96906	274	58
MS28775-136		KITS	
MS28775-136	96906	102	47
MS28775-136	96906	103	40
MS28775-136	96906	134	6
MS28775-137	96906	BULK	
MS28775-138	96906	72	30
MS28775-138	96906	72	61
MS28775-138	96906	73	6
MS28775-138	96906	KITS	
MS28775-140	96906	138	18
MS28775-141		KITS	
MS28775-141	96906	134	41
MS28775-142	96906	73	58
MS28775-143	96906	140	5
MS28775-143	96906	141	17
MS28775-143	96906	KITS	
MS28775-144	96906	274	18
MS28775-145	96906	63	42
MS28775-145	96906	63	52
MS28775-145	96906	63	57
MS28775-147	96906	63	87
MS28775-149	96906	73	31
MS28775-21	96906	258A	4
MS28775-210		KITS	
MS28775-210	96906	59	17
MS28775-210	96906	124	65
MS28775-210	96906	132	25
MS28775-210	96906	145	15
MS28775-210	96906	146	30
MS28775-210	96906	KITS	
MS28775-211	96906	26	18
MS28775-211	96906	62	60E
MS28775-211	96906	QC1	70
MS28775-211	96906	117	69B
MS28775-211	96906	117	89
MS28775-211	96906	119	300
MS28775-211	96906	129	124
MS28775-211	96906	129	131
MS28775-211	96906	133	12
MS28775-211	96906	217	19
MS28775-211	96906	217	21
MS28775-211	96906	KITS	
MS28775-211	96906	217A	3
MS28775-211	96906	217B	7
MS28775-212	96906	144	4
MS28775-213		KITS	
MS28775-213	96906	49	26A
MS28775-213	96906	59	14
MS28775-213	96906	59	6
MS28775-213	96906	136	3
MS28775-214	96906	73	38
MS28775-214	96906	145	24
MS28775-216		KITS	
MS28775-216	96906	47	16
MS28775-217	96906	127	12
MS28775-218		KITS	
MS28775-218	96906	74	38
MS28775-218	96906	111	11
MS28775-218	96906	124	23
MS28775-218	96906	224	12
MS28775-218	96906	272	44
MS28775-218	96906	272	49
MS28775-219	96906	133	73
MS28775-220		KITS	
MS28775-220	96906	47	10
MS28775-220	96906	102	45A
MS28775-220	96906	102	5
MS28775-220	96906	102	6A
MS28775-220	96906	103	40A
MS28775-220	96906	103	5
MS28775-221	96906	74	56
MS28775-221	96906	102	49
MS28775-221	96906	103	42
MS28775-223	96906	266	46
MS28775-224	96906	57	8
MS28775-225	96906	BULK	
MS28775-226		KITS	
MS28775-226	96906	155	3
MS28775-229		KITS	
MS28775-229	96906	49	37
MS28775-233	96906	73	29
MS28775-233	96906	74	34
MS28775-234		KITS	
MS28775-234	96906	49	13A
MS28775-234	96906	138	38
MS28775-236		KITS	
MS28775-236	96906	49	17
MS28775-237	96906	74	18
MS28775-237	96906	74	32
MS28775-237	96906	74	53
MS28775-240		KITS	
MS28775-240	96906	51	52
MS28775-240	96906	274	41
MS28775-242		KITS	
MS28775-242	96906	272	41
MS28775-243	96906	140	3
MS28775-243	96906	141	15
MS28775-243	96906	KITS	
MS28775-326		KITS	
MS28775-326	96906	57	10
MS28775-326	96906	155	9
MS28775-326	96906	272	54
MS28775-328		KITS	
MS28775-328	96906	53	22
MS28775-328	96906	54	48
MS28775-328	96906	58	5
MS28775-330	96906	BULK	
MS28775-332		KITS	
MS28775-332	96906	51	61
MS28775-333		KITS	
MS28775-333	96906	53	15
MS28775-333	96906	54	40
MS28775-336		KITS	
MS28775-336	96906	53	17
MS28775-336	96906	53	40
MS28775-336	96906	54	30
MS28775-336	96906	54	37
MS28775-340		KITS	
MS28775-340	96906	51	47
MS28775-344		KITS	
MS28775-344	96906	272	47
MS28775-344	96906	272	52
MS28776-11		KITS	
MS28776-11	96906	47	18
MS28776-13		KITS	
MS28776-13	96906	272	43
MS28776-25		53	12
MS28776-25		54	43
MS28776-25		KITS	
MS28776-31		KITS	
MS28776-31	96906	51	59
MS28777-10	96906	QC1	89

REFERENCE NUMBER	MFG CODE	FIG NUMBER	ITEM NUMBER
MS28777-10	96906	119	337
MS28777-10	96906	129	1A
MS28777-10	96906	129	10A
MS28777-10	96906	129	75B
MS28777-10	96906	129	9
MS28777-10	96906	143	8
MS28777-12	96906	129	2A
MS28777-12	96906	129	46A
MS28777-12	96906	129	46C
MS28777-12	96906	129	65A
MS28777-12	96906	129	66A
MS28777-12	96906	129	71A
MS28777-12	96906	129	72A
MS28777-12	96906	129	98
MS28777-12	96906	KITS	
MS28777-16	96906	129	109A
MS28777-16	96906	129	15A
MS28777-16	96906	129	18A
MS28777-16	96906	129	63A
MS28777-16	96906	129	78A
MS28777-16	96906	139	37
MS28777-16	96906	139	38
MS28777-16	96906	139	85
MS28777-16	96906	139	86
MS28777-3	96906	KITS	
MS28777-4		KITS	
MS28777-4	96906	44	31
MS28777-4	96906	51	
MS28777-4	96906	QC1	105
MS28777-4	96906	QC1	115
MS28777-4	96906	109	1
MS28777-4	96906	109	42
MS28777-4	96906	109	57B
MS28777-4	96906	109	60B
MS28777-4	96906	110	47
MS28777-4	96906	110	7
MS28777-4	96906	112	123
MS28777-4	96906	112	129
MS28777-4	96906	112	133
MS28777-4	96906	112	137
MS28777-4	96906	112	141
MS28777-4	96906	112	143
MS28777-4	96906	112	149
MS28777-4	96906	112	151
MS28777-4	96906	112	159
MS28777-4	96906	112	167
MS28777-4	96906	112	6
MS28777-4	96906	112	64
MS28777-4	96906	112	67
MS28777-4	96906	112	72
MS28777-4	96906	112	95
MS28777-4	96906	112	97
MS28777-4	96906	115	46
MS28777-4	96906	117	
MS28777-4	96906	117	2A
MS28777-4	96906	117	2B
MS28777-4	96906	117	4A
MS28777-4	96906	117	6A
MS28777-4	96906	117	75B
MS28777-4	96906	117	83
MS28777-4	96906	117	95G
MS28777-4	96906	119	
MS28777-4	96906	119	121
MS28777-4	96906	119	132
MS28777-4	96906	119	148
MS28777-4	96906	119	15
MS28777-4	96906	119	164
MS28777-4	96906	119	197
MS28777-4	96906	119	201
MS28777-4	96906	119	214
MS28777-4	96906	119	223
MS28777-4	96906	119	229
MS28777-4	96906	119	278
MS28777-4	96906	119	29
MS28777-4	96906	119	346
MS28777-4	96906	119	365
MS28777-4	96906	119	398
MS28777-4	96906	119	42
MS28777-4	96906	119	71
MS28777-4	96906	119	80
MS28777-4	96906	119	99
MS28777-4	96906	129	
MS28777-4	96906	129	142
MS28777-4	96906	129	25A
MS28777-4	96906	129	35B
MS28777-4	96906	129	52A
MS28777-4	96906	129	82A
MS28777-4	96906	129	95B
MS28777-4	96906	129	95D
MS28777-4	96906	129	95G
MS28777-4	96906	139	2
MS28777-4	96906	139	61
MS28777-4	96906	143	27
MS28777-4	96906	146	9
MS28777-4	96906	KITS	
MS28777-6	96906	QC1	129
MS28777-6	96906	QC1	94
MS28777-6	96906	109	14B
MS28777-6	96906	109	3
MS28777-6	96906	109	40
MS28777-6	96906	109	50
MS28777-6	96906	109	53B
MS28777-6	96906	109	55B
MS28777-6	96906	109	71B
MS28777-6	96906	112	1
MS28777-6	96906	112	14
MS28777-6	96906	112	18
MS28777-6	96906	112	22
MS28777-6	96906	112	29
MS28777-6	96906	112	33
MS28777-6	96906	112	35
MS28777-6	96906	112	38
MS28777-6	96906	112	44
MS28777-6	96906	112	48
MS28777-6	96906	116	
MS28777-6	96906	117	58A
MS28777-6	96906	117	95C
MS28777-6	96906	119	284
MS28777-6	96906	119	306
MS28777-6	96906	119	315
MS28777-6	96906	119	326
MS28777-6	96906	129	
MS28777-6	96906	129	109B
MS28777-6	96906	129	111A
MS28777-6	96906	129	44A
MS28777-6	96906	129	67B
MS28777-6	96906	129	70A
MS28777-6	96906	129	70B
MS28777-6	96906	139	23
MS28777-6	96906	139	4
MS28777-6	96906	139	45
MS28777-6	96906	139	57
MS28777-6	96906	139	72
MS28777-6	96906	143	
MS28777-6	96906	KITS	
MS28777-8	96906	QC1	83
MS28777-8	96906	109	16
MS28777-8	96906	109	46
MS28777-8	96906	117	73C
MS28777-8	96906	117	79B
MS28777-8	96906	119	268
MS28777-8	96906	119	341

REFERENCE NUMBER	MFG CODE	FIG NUMBER	ITEM NUMBER
MS28777-8	96906	129	121
MS28777-8	96906	129	146
MS28777-8	96906	129	97
MS28777-8	96906	139	25
MS28777-8	96906	139	35
MS28777-8	96906	139	76
MS28777-8	96906	139	83
MS28777-8	96906	139	97
MS28777-8	96906	143	4
MS28777-8	96906	KITS	
MS28778-10	96906	QC1	88
MS28778-10	96906	117	
MS28778-10	96906	119	254
MS28778-10	96906	119	258
MS28778-10	96906	119	332
MS28778-10	96906	119	336
MS28778-10	96906	129	
MS28778-10	96906	129	1A
MS28778-10	96906	129	10A
MS28778-10	96906	129	13
MS28778-10	96906	129	27A
MS28778-10	96906	129	5
MS28778-10	96906	129	66A
MS28778-10	96906	129	67A
MS28778-10	96906	129	7A
MS28778-10	96906	129	75B
MS28778-10	96906	129	77
MS28778-10	96906	129	9
MS28778-10	96906	139	33
MS28778-10	96906	139	81
MS28778-10	96906	143	12
MS28778-10	96906	143	9
MS28778-10	96906	KITS	
MS28778-12	96906	81	34
MS28778-12	96906	81	47
MS28778-12	96906	117	73F
MS28778-12	96906	119	388
MS28778-12	96906	129	111A
MS28778-12	96906	129	17
MS28778-12	96906	129	2A
MS28778-12	96906	129	44
MS28778-12	96906	129	45A
MS28778-12	96906	129	46A
MS28778-12	96906	129	46C
MS28778-12	96906	129	65A
MS28778-12	96906	129	66A
MS28778-12	96906	129	70B
MS28778-12	96906	129	71A
MS28778-12	96906	129	72A
MS28778-12	96906	129	73A
MS28778-12	96906	129	78A
MS28778-12	96906	129	88A
MS28778-12	96906	129	98
MS28778-12	96906	139	49
MS28778-12	96906	139	98
MS28778-12	96906	KITS	
MS28778-16		KITS	
MS28778-16	96906	49	23
MS28778-16	96906	59	16C
MS28778-16	96906	117	73J
MS28778-16	96906	129	
MS28778-16	96906	129	109A
MS28778-16	96906	129	15A
MS28778-16	96906	129	16A
MS28778-16	96906	129	17
MS28778-16	96906	129	18
MS28778-16	96906	129	18A
MS28778-16	96906	129	19A
MS28778-16	96906	129	27A
MS28778-16	96906	129	30
MS28778-16	96906	129	63A
MS28778-16	96906	129	78A
MS28778-16	96906	139	37
MS28778-16	96906	139	38
MS28778-16	96906	139	85
MS28778-16	96906	139	86
MS28778-16	96906	KITS	
MS28778-2	96906	102	23
MS28778-2	96906	103	21
MS28778-2	96906	133	62
MS28778-2	96906	228	
MS28778-2	96906	272	6
MS28778-20	96906	72	87
MS28778-20	96906	74	20
MS28778-20	96906	140	9
MS28778-20	96906	KITS	
MS28778-3	96906	109	43
MS28778-3	96906	109	5
MS28778-3	96906	112	127
MS28778-3	96906	112	131
MS28778-3	96906	112	139
MS28778-3	96906	112	145
MS28778-3	96906	112	157
MS28778-3	96906	112	163
MS28778-3	96906	119	
MS28778-3	96906	139	
MS28778-3	96906	139	21
MS28778-3	96906	139	70
MS28778-3	96906	224	48
MS28778-4		KITS	
MS28778-4	96906	44	30
MS28778-4	96906	51	
MS28778-4	96906	57	16B
MS28778-4	96906	58	15B
MS28778-4	96906	63	92
MS28778-4	96906	72	24
MS28778-4	96906	72	55
MS28778-4	96906	73	14
MS28778-4	96906	93	17
MS28778-4	96906	QC1	106
MS28778-4	96906	QC1	116
MS28778-4	96906	QC1	50
MS28778-4	96906	109	
MS28778-4	96906	109	1
MS28778-4	96906	109	42
MS28778-4	96906	109	57A
MS28778-4	96906	109	58E
MS28778-4	96906	109	60A
MS28778-4	96906	110	
MS28778-4	96906	110	14
MS28778-4	96906	110	42
MS28778-4	96906	110	47
MS28778-4	96906	110	7
MS28778-4	96906	112	122
MS28778-4	96906	112	123
MS28778-4	96906	112	129
MS28778-4	96906	112	133
MS28778-4	96906	112	137
MS28778-4	96906	112	141
MS28778-4	96906	112	143
MS28778-4	96906	112	149
MS28778-4	96906	112	151
MS28778-4	96906	112	153
MS28778-4	96906	112	159
MS28778-4	96906	112	161
MS28778-4	96906	112	167
MS28778-4	96906	112	24
MS28778-4	96906	112	6
MS28778-4	96906	112	64
MS28778-4	96906	112	67
MS28778-4	96906	112	73
MS28778-4	96906	112	84

REFERENCE NUMBER	MFG CODE	FIG NUMBER	ITEM NUMBER
MS28778-4	96906	112	88
MS28778-4	96906	112	90
MS28778-4	96906	112	95
MS28778-4	96906	112	97
MS28778-4	96906	115	46
MS28778-4	96906	115	53
MS28778-4	96906	116	
MS28778-4	96906	117	
MS28778-4	96906	117	2A
MS28778-4	96906	117	2B
MS28778-4	96906	117	3B
MS28778-4	96906	117	4A
MS28778-4	96906	117	6A
MS28778-4	96906	117	65
MS28778-4	96906	117	71B
MS28778-4	96906	117	75A
MS28778-4	96906	117	83
MS28778-4	96906	117	95H
MS28778-4	96906	119	
MS28778-4	96906	119	100
MS28778-4	96906	119	109
MS28778-4	96906	119	121
MS28778-4	96906	119	133
MS28778-4	96906	119	141
MS28778-4	96906	119	148
MS28778-4	96906	119	16
MS28778-4	96906	119	161
MS28778-4	96906	119	197
MS28778-4	96906	119	201
MS28778-4	96906	119	214
MS28778-4	96906	119	223
MS28778-4	96906	119	229
MS28778-4	96906	119	277
MS28778-4	96906	119	289
MS28778-4	96906	119	30
MS28778-4	96906	119	345
MS28778-4	96906	119	353
MS28778-4	96906	119	357
MS28778-4	96906	119	364
MS28778-4	96906	119	37
MS28778-4	96906	119	399
MS28778-4	96906	119	43
MS28778-4	96906	119	59
MS28778-4	96906	119	7
MS28778-4	96906	119	71
MS28778-4	96906	119	80
MS28778-4	96906	119	81
MS28778-4	96906	129	
MS28778-4	96906	129	138
MS28778-4	96906	129	141
MS28778-4	96906	129	150
MS28778-4	96906	129	25A
MS28778-4	96906	129	35B
MS28778-4	96906	129	52A
MS28778-4	96906	129	53
MS28778-4	96906	129	55A
MS28778-4	96906	129	7A
MS28778-4	96906	129	82A
MS28778-4	96906	129	83
MS28778-4	96906	129	84A
MS28778-4	96906	129	85A
MS28778-4	96906	129	9
MS28778-4	96906	129	90A
MS28778-4	96906	129	95B
MS28778-4	96906	129	95D
MS28778-4	96906	129	95G
MS28778-4	96906	134	82
MS28778-4	96906	139	113
MS28778-4	96906	139	118
MS28778-4	96906	139	2
MS28778-4	96906	139	37
MS28778-4	96906	139	61
MS28778-4	96906	139	85
MS28778-4	96906	139	86
MS28778-4	96906	143	28
MS28778-4	96906	146	8
MS28778-4	96906	178	4
MS28778-4	96906	178	6
MS28778-4	96906	178	8
MS28778-4	96906	217	
MS28778-4	96906	224	45
MS28778-4	96906	270	17A
MS28778-4	96906	KITS	
MS28778-4	96906	258A	11
MS28778-5		KITS	
MS28778-5	96906	53	43
MS28778-5	96906	54	11
MS28778-5	96906	178	6
MS28778-5	96906	KITS	
MS28778-5	96906	258A	2
MS28778-6	96906	72	102
MS28778-6	96906	72	29
MS28778-6	96906	72	60
MS28778-6	96906	72	89
MS28778-6	96906	72	94
MS28778-6	96906	73	5
MS28778-6	96906	74	14
MS28778-6	96906	74	5
MS28778-6	96906	QC1	108
MS28778-6	96906	QC1	118
MS28778-6	96906	QC1	120
MS28778-6	96906	QC1	128
MS28778-6	96906	QC1	136
MS28778-6	96906	QC1	138
MS28778-6	96906	QC1	92
MS28778-6	96906	QC1	97
MS28778-6	96906	102	28
MS28778-6	96906	103	24
MS28778-6	96906	109	
MS28778-6	96906	109	12B
MS28778-6	96906	109	14A
MS28778-6	96906	109	27
MS28778-6	96906	109	29
MS28778-6	96906	109	3
MS28778-6	96906	109	36
MS28778-6	96906	109	40
MS28778-6	96906	109	50
MS28778-6	96906	109	53A
MS28778-6	96906	109	55C
MS28778-6	96906	109	61E
MS28778-6	96906	109	62B
MS28778-6	96906	109	71A
MS28778-6	96906	109	77E
MS28778-6	96906	110	34
MS28778-6	96906	110	35
MS28778-6	96906	110	78
MS28778-6	96906	112	1
MS28778-6	96906	112	14
MS28778-6	96906	112	19
MS28778-6	96906	112	22
MS28778-6	96906	112	29
MS28778-6	96906	112	30
MS28778-6	96906	112	33
MS28778-6	96906	112	35
MS28778-6	96906	112	38
MS28778-6	96906	112	42
MS28778-6	96906	112	44
MS28778-6	96906	112	48
MS28778-6	96906	112	86
MS28778-6	96906	115	
MS28778-6	96906	116	
MS28778-6	96906	117	50

REFERENCE NUMBER	MFG CODE	FIG NUMBER	ITEM NUMBER
MS28778-6	96906	117	58A
MS28778-6	96906	117	65
MS28778-6	96906	117	94
MS28778-6	96906	117	95D
MS28778-6	96906	119	
MS28778-6	96906	119	18
MS28778-6	96906	119	229
MS28778-6	96906	119	232
MS28778-6	96906	119	281
MS28778-6	96906	119	283
MS28778-6	96906	119	303
MS28778-6	96906	119	305
MS28778-6	96906	119	309
MS28778-6	96906	119	311
MS28778-6	96906	119	314
MS28778-6	96906	119	321
MS28778-6	96906	119	325
MS28778-6	96906	119	45
MS28778-6	96906	129	
MS28778-6	96906	129	109B
MS28778-6	96906	129	111A
MS28778-6	96906	129	44A
MS28778-6	96906	129	67B
MS28778-6	96906	129	68A
MS28778-6	96906	129	70A
MS28778-6	96906	129	70B
MS28778-6	96906	129	75A
MS28778-6	96906	129	85B
MS28778-6	96906	129	90A
MS28778-6	96906	134	50
MS28778-6	96906	139	111
MS28778-6	96906	139	16
MS28778-6	96906	139	23
MS28778-6	96906	139	4
MS28778-6	96906	139	41B
MS28778-6	96906	139	45
MS28778-6	96906	139	55A
MS28778-6	96906	139	57
MS28778-6	96906	139	72
MS28778-6	96906	139	91
MS28778-6	96906	139	99
MS28778-6	96906	143	
MS28778-6	96906	143	13
MS28778-6	96906	143	17
MS28778-6	96906	143	20
MS28778-6	96906	143	23
MS28778-6	96906	143	30
MS28778-6	96906	143	34
MS28778-6	96906	178	133
MS28778-6	96906	272	28
MS28778-6	96906	274	2
MS28778-6	96906	KITS	
MS28778-8		KITS	
MS28778-8	96906	51	21
MS28778-8	96906	53	5
MS28778-8	96906	57	16
MS28778-8	96906	57	18
MS28778-8	96906	58	15
MS28778-8	96906	58	17
MS28778-8	96906	QC1	101
MS28778-8	96906	QC1	82
MS28778-8	96906	108	5
MS28778-8	96906	109	
MS28778-8	96906	109	16
MS28778-8	96906	109	46
MS28778-8	96906	117	
MS28778-8	96906	117	69D
MS28778-8	96906	117	72A
MS28778-8	96906	117	73D
MS28778-8	96906	117	77B
MS28778-8	96906	117	79A

REFERENCE NUMBER	MFG CODE	FIG NUMBER	ITEM NUMBER
MS28778-8	96906	119	217
MS28778-8	96906	119	267
MS28778-8	96906	119	287
MS28778-8	96906	119	298
MS28778-8	96906	119	340
MS28778-8	96906	119	349
MS28778-8	96906	119	383
MS28778-8	96906	119	392
MS28778-8	96906	129	
MS28778-8	96906	129	1A
MS28778-8	96906	129	11
MS28778-8	96906	129	110A
MS28778-8	96906	129	115
MS28778-8	96906	129	118
MS28778-8	96906	129	120
MS28778-8	96906	129	133
MS28778-8	96906	129	14
MS28778-8	96906	129	147
MS28778-8	96906	129	39
MS28778-8	96906	129	48
MS28778-8	96906	129	71A
MS28778-8	96906	129	97
MS28778-8	96906	137	33
MS28778-8	96906	139	25
MS28778-8	96906	139	35
MS28778-8	96906	139	76
MS28778-8	96906	139	83
MS28778-8	96906	139	97
MS28778-8	96906	143	18
MS28778-8	96906	143	3
MS28778-8	96906	KITS	
MS28778-8	96906	265	112
MS28778-8	96906	265	115
MS28778-8	96906	268	112
MS28778-8		KITS	
MS28778-8	96906	145	10
MS28778-8	96906	151	7
MS28778-8		KITS	
MS28778-8	96906	145	21
MS28778-8		KITS	
MS28778-8	96906	124	11
MS28778-8	96906	125	46
MS28778-8	96906	128	37
MS28778-8	96906	133	41
MS28778-8	96906	133	54
MS28778-8	96906	133	6
MS28778-8	96906	136	6
MS28778-8	96906	153	20
MS28778-8		KITS	
MS28778-8	96906	124	24
MS28778-8	96906	272	45
MS28778-8	96906	272	50
MS28778-8	96906	265	117
MS28778-8	96906	265	119
MS28778-8	96906	265	121
MS28778-8	96906	268	116
MS28778-8	96906	218	228
MS28778-8	96906	218	63
MS28778-8		KITS	
MS28778-8	96906	51	80
MS28778-8	96906	53	41
MS28778-8	96906	54	3
MS28778-8	96906	59	22
MS28778-8	96906	117	84
MS28778-8	96906	119	402
MS28778-8	96906	129	92
MS28778-8	96906	270	23C
MS28778-8	96906	KITS	
MS28778-8	96906	112	24
MS28778-8	96906	129	95F
MS28778-8		KITS	

REFERENCE NUMBER	MFG CODE	FIG NUMBER	ITEM NUMBER
MS28778-8	96906	117	58A
MS28778-8	96906	117	65
MS28778-8	96906	117	94
MS28778-8	96906	117	95D
MS28778-8	96906	119	
MS28778-8	96906	119	18
MS28778-8	96906	119	229
MS28778-8	96906	119	232
MS28778-8	96906	119	281
MS28778-8	96906	119	283
MS28778-8	96906	119	303
MS28778-8	96906	119	305
MS28778-8	96906	119	309
MS28778-8	96906	119	311
MS28778-8	96906	119	314
MS28778-8	96906	119	321
MS28778-8	96906	119	325
MS28778-8	96906	119	45
MS28778-8	96906	129	
MS28778-8	96906	129	109B
MS28778-8	96906	129	111A
MS28778-8	96906	129	44A
MS28778-8	96906	129	67B
MS28778-8	96906	129	68A
MS28778-8	96906	129	70A
MS28778-8	96906	129	70B
MS28778-8	96906	129	75A
MS28778-8	96906	129	85B
MS28778-8	96906	129	90A
MS28778-8	96906	134	50
MS28778-8	96906	139	111
MS28778-8	96906	139	16
MS28778-8	96906	139	23
MS28778-8	96906	139	4
MS28778-8	96906	139	41B
MS28778-8	96906	139	45
MS28778-8	96906	139	55A
MS28778-8	96906	139	57
MS28778-8	96906	139	72
MS28778-8	96906	139	91
MS28778-8	96906	139	99
MS28778-8	96906	143	
MS28778-8	96906	143	13
MS28778-8	96906	143	17
MS28778-8	96906	143	20
MS28778-8	96906	143	23
MS28778-8	96906	143	30
MS28778-8	96906	143	34
MS28778-8	96906	178	133
MS28778-8	96906	272	28
MS28778-8	96906	274	2
MS28778-8	96906	KITS	
MS28778-8		KITS	
MS28778-8	96906	51	21
MS28778-8	96906	53	5
MS28778-8	96906	57	16
MS28778-8	96906	57	18
MS28778-8	96906	58	15
MS28778-8	96906	58	17
MS28778-8	96906	QC1	101
MS28778-8	96906	QC1	82
MS28778-8	96906	108	5
MS28778-8	96906	109	
MS28778-8	96906	109	16
MS28778-8	96906	109	46
MS28778-8	96906	117	
MS28778-8	96906	117	69D
MS28778-8	96906	117	72A
MS28778-8	96906	117	73D
MS28778-8	96906	117	77B
MS28778-8	96906	117	79A

REFERENCE NUMBER	MFG CODE	FIG NUMBER	ITEM NUMBER
MS28778-8	96906	119	217
MS28778-8	96906	119	267
MS28778-8	96906	119	287
MS28778-8	96906	119	298
MS28778-8	96906	119	340
MS28778-8	96906	119	349
MS28778-8	96906	119	383
MS28778-8	96906	119	392
MS28778-8	96906	129	
MS28778-8	96906	129	1A
MS28778-8	96906	129	11
MS28778-8	96906	129	110A
MS28778-8	96906	129	115
MS28778-8	96906	129	118
MS28778-8	96906	129	120
MS28778-8	96906	129	133
MS28778-8	96906	129	14
MS28778-8	96906	129	147
MS28778-8	96906	129	39
MS28778-8	96906	129	48
MS28778-8	96906	129	71A
MS28778-8	96906	129	97
MS28778-8	96906	137	33
MS28778-8	96906	139	25
MS28778-8	96906	139	35
MS28778-8	96906	139	76
MS28778-8	96906	139	83
MS28778-8	96906	139	97
MS28778-8	96906	143	18
MS28778-8	96906	143	3
MS28778-8	96906	KITS	
MS28778-8	96906	265	112
MS28778-8	96906	265	115
MS28778-8	96906	268	112
MS28778-8		KITS	
MS28778-8	96906	145	10
MS28778-8	96906	151	7
MS28778-8		KITS	
MS28778-8	96906	145	21
MS28778-8		KITS	
MS28778-8	96906	124	11
MS28778-8	96906	125	46
MS28778-8	96906	128	37
MS28778-8	96906	133	41
MS28778-8	96906	133	54
MS28778-8	96906	133	6
MS28778-8	96906	136	6
MS28778-8	96906	153	20
MS28778-8		KITS	
MS28778-8	96906	124	24
MS28778-8	96906	272	45
MS28778-8	96906	272	50
MS28778-8	96906	265	117
MS28778-8	96906	265	119
MS28778-8	96906	265	121
MS28778-8	96906	268	116
MS28778-8	96906	218	228
MS28778-8	96906	218	63
MS28778-8		KITS	
MS28778-8	96906	51	80
MS28778-8	96906	53	41
MS28778-8	96906	54	3
MS28778-8	96906	59	22
MS28778-8	96906	117	84
MS28778-8	96906	119	402
MS28778-8	96906	129	92
MS28778-8	96906	270	23C
MS28778-8	96906	KITS	
MS28778-8	96906	112	24
MS28778-8	96906	129	95F
MS28778-8		KITS	

REFERENCE NUMBER	MFG CODE	FIG NUMBER	ITEM NUMBER
MS28932-1	96906	BULK	
MS28932C04-8	96906	137	6
MS28932C09	96906	53	13
MS28932C09	96906	54	41
MS28932C12		KITS	
MS28932C12	96906	51	57
MS29512-02	96906	KITS	
MS29512-03	96906	KITS	
MS29512-04	96906	QC1	59
MS29512-04	96906	QC1	64
MS29512-04	96906	213	
MS29512-04	96906	213	
MS29512-04	96906	217	
MS29512-04	96906	220	
MS29512-04	96906	221	30
MS29512-04	96906	221	70
MS29512-04	96906	221	81
MS29512-04	96906	257	18C
MS29512-04	96906	257	21A
MS29512-04	96906	262	41
MS29512-04	96906	262	50
MS29512-04	96906	273	18B
MS29512-04	96906	KITS	
MS29512-04	96906	217A	11
MS29512-04	96906	217B	14
MS29512-06	96906	115	41
MS29512-06	96906	213	
MS29512-06	96906	218	
MS29512-06	96906	220	
MS29512-06	96906	221	105
MS29512-06	96906	221	107
MS29512-06	96906	221	11
MS29512-06	96906	221	125
MS29512-06	96906	221	130
MS29512-06	96906	221	135
MS29512-06	96906	221	37
MS29512-06	96906	221	59
MS29512-06	96906	221	61
MS29512-06	96906	221	79
MS29512-06	96906	221	88
MS29512-06	96906	221	89
MS29512-06	96906	221	90
MS29512-06	96906	251	18C
MS29512-06	96906	KITS	
MS29512-06	96906	219A	169
MS29512-06	96906	219A	64
MS29512-08	96906	211	49
MS29512-08	96906	KITS	
MS29512-08	96906	219A	124
MS29512-08	96906	219A	19
MS29512-12	96906	62	
MS29512-12	96906	QC1	76
MS29512-12	96906	217	
MS29512-12	96906	KITS	
MS29512-12	96906	217A	24
MS29512-12	96906	217B	25
MS29512-16	96906	211	
MS29512-16	96906	213	
MS29512-16	96906	218	
MS29512-16	96906	220	
MS29512-16	96906	221	125
MS29512-16	96906	221	135
MS29512-16	96906	221	30
MS29512-16	96906	221	31
MS29512-16	96906	221	35
MS29512-16	96906	221	59
MS29512-16	96906	221	70
MS29512-16	96906	221	89
MS29512-16	96906	221	90
MS29512-16	96906	221	96
MS29512-16	96906	221	98
MS29512-16	96906	KITS	
MS29512-16	96906	219A	172
MS29512-16	96906	219A	67
MS29512-4		KITS	
MS29512-8	96906	218	52
MS29512-8	96906	219	47
MS29512-8	96906	219	94
MS29513-007	96906	BULK	
MS29513-008	96906	214	20
MS29513-008	96906	216	58
MS29513-009	96906	BULK	
MS29513-010	96906	213	
MS29513-010	96906	214	16
MS29513-010	96906	220	
MS29513-010	96906	KITS	
MS29513-011	96906	215	27
MS29513-012	96906	216	60
MS29513-013	96906	BULK	
MS29513-015	96906	216	66
MS29513-016		KITS	
MS29513-016	96906	KITS	
MS29513-018	96906	213	
MS29513-018	96906	220	
MS29513-019	96906	BULK	
MS29513-019	96906	KITS	
MS29513-020	96906	KITS	
MS29513-021	96906	KITS	
MS29513-022	96906	214	9
MS29513-022	96906	KITS	
MS29513-024	96906	219	15
MS29513-024	96906	219	89
MS29513-024	96906	KITS	
MS29513-024	96906	219A	154
MS29513-024	96906	219A	55
MS29513-026	96906	216	39
MS29513-026	96906	218	24
MS29513-027	96906	216	69
MS29513-028	96906	216	33C
MS29513-028	96906	219	18
MS29513-028	96906	219	86
MS29513-028	96906	KITS	
MS29513-028	96906	219A	158
MS29513-028	96906	219A	51
MS29513-111	96906	215	24
MS29513-114	96906	262	54B
MS29513-115	96906	262D	3
MS29513-12		KITS	
MS29513-121	96906	204	
MS29513-121	96906	219A	148
MS29513-121	96906	219A	47
MS29513-126	96906	BULK	
MS29513-145	96906	BULK	
MS29513-15		KITS	
MS29513-21	96906	216	33H
MS29513-217	96906	215	23
MS29513-219		KITS	
MS29513-219	96906	260	39
MS29513-222	96906	262	54C
MS29513-222	96906	219A	125
MS29513-222	96906	219A	20
MS29513-223	96906	218	22A
MS29513-223	96906	219A	137
MS29513-223	96906	219A	147
MS29513-223	96906	219A	35
MS29513-223	96906	219A	46
MS29513-224	96906	218	5
MS29513-224	96906	219A	109
MS29513-224	96906	219A	4
MS29513-227	96906	260	40
MS29513-229	96906	218	22
MS29513-229	96906	218	8F

REFERENCE NUMBER	MFG CODE	FIG NUMBER	ITEM NUMBER
MS29513-229	96906	219A	145
MS29513-229	96906	219A	150
MS29513-229	96906	219A	33
MS29513-229	96906	219A	44
MS29513-233		KITS	
MS29513-233	96906	218	12E
MS29513-233	96906	218	8D
MS29513-233	96906	KITS	
MS29513-234	96906	KITS	
MS29513-241	96906	218	45B
MS29513-241	96906	219A	10
MS29513-241	96906	219A	115
MS29513-26		KITS	
MS29513-267	96906	81	172
MS29513-268	96906	81	171
MS29513-27		KITS	
MS29513-274		KITS	
MS29513-274	96906	262	9
MS29513-8		KITS	
MS29561-006	96906	BULK	
MS29561-008		KITS	
MS29561-008	96906	82	8
MS29561-011	96906	83	50
MS29561-012	96906	183A	34
MS29561-013	96906	71	38A
MS29561-013	96906	71	89
MS29561-013	96906	76	103
MS29561-013	96906	81	135
MS29561-013	96906	81	52
MS29561-013	96906	83	164
MS29561-013	96906	83	296
MS29561-013	96906	83	57
MS29561-013	96906	88	19
MS29561-013	96906	89	101
MS29561-013	96906	89	21
MS29561-013	96906	KITS	
MS29561-014	96906	76	104
MS29561-014	96906	KITS	
MS29561-015	96906	76	109A
MS29561-015	96906	81	33A
MS29561-015	96906	83	110A
MS29561-016		KITS	
MS29561-016	96906	82	3
MS29561-017	96906	232	27
MS29561-018		KITS	
MS29561-018	96906	82	10
MS29561-020	96906	71	18
MS29561-020	96906	KITS	
MS29561-026	96906	KITS	
MS29561-110	96906	88	55
MS29561-111	96906	76	51B
MS29561-111	96906	89	88
MS29561-112		KITS	
MS29561-112	96906	82	29
MS29561-113	96906	81	173
MS29561-113	96906	83	309
MS29561-114		KITS	
MS29561-114	96906	82	26
MS29561-115	96906	83	183
MS29561-115	96906	83	93
MS29561-115	96906	91	17
MS29561-116	96906	89	85
MS29561-119		KITS	
MS29561-119	96906	71	10
MS29561-119	96906	76	109C
MS29561-119	96906	76	28
MS29561-119	96906	76	32B
MS29561-119	96906	83	111
MS29561-119	96906	83	113
MS29561-119	96906	83	21J
MS29561-119	96906	88	10
MS29561-119	96906	88	6
MS29561-119	96906	88	8
MS29561-119	96906	88	96
MS29561-119	96906	89	11
MS29561-119	96906	89	13
MS29561-119	96906	89	15
MS29561-119	96906	95	105
MS29561-119	96906	95	48
MS29561-119	96906	95	55
MS29561-119	96906	95	58
MS29561-119	76906	95	77
MS29561-119	96906	95	80
MS29561-119	96906	95	92
MS29561-119	96906	95	97
MS29561-119	96906	QC1	179
MS29561-119	96906	KITS	
MS29561-120	96906	BULK	
MS29561-125	96906	BULK	
MS29561-126		KITS	
MS29561-126	96906	95	176
MS29561-129	96906	81	13A
MS29561-129	96906	83	18
MS29561-129	96906	83	9
MS29561-133	96906	71	43
MS29561-133	96906	KITS	
MS29561-133	96906	KITS	
MS29561-136	96906	83	11
MS29561-136	96906	83	130
MS29561-136	96906	83	20
MS29561-136	96906	83	42
MS29561-136	96906	KITS	
MS29561-141	96906	83	44
MS29561-143	96906	71	54
MS29561-212	96906	76	143C
MS29561-212	96906	76	162
MS29561-215	96906	76	143D
MS29561-217	96906	76	182
MS29561-217	96906	81	11A
MS29561-217	96906	KITS	
MS29561-218		KITS	
MS29561-218	96906	82	25
MS29561-222	96906	83	64
MS29561-222	96906	KITS	
MS29561-224	96906	83	109
MS29561-224	96906	83	92
MS29561-225	96906	83	32
MS29561-225	96906	KITS	
MS29561-226	96906	83	373
MS29561-228	96906	71	103
MS29561-228	96906	76	80
MS29561-228	96906	76	83
MS29561-228	96906	83	135
MS29561-228	96906	KITS	
MS29561-229	96906	76	9A
MS29561-231	96906	76	61
MS29561-231	96906	81	31
MS29561-231	96906	83	117
MS29561-231	96906	KITS	
MS29561-233	96906	88	4
MS29561-234		KITS	
MS29561-234	96906	76	136
MS29561-234	96906	76	61A
MS29561-234	96906	81	76
MS29561-234	96906	83	156
MS29561-234	96906	83	21K
MS29561-234	96906	KITS	
MS29561-234	96906	76	150
MS29561-238	96906	89	9
MS29561-238		KITS	
MS29561-239	96906	81	37
MS29561-239	96906	KITS	
MS29561-239			

REFERENCE NUMBER	MFG CODE	FIG NUMBER	ITEM NUMBER
MS29561-240	96906	76	87
MS29561-240	96906	83	369
MS29561-240	96906	KITS	
MS29561-242		KITS	
MS29561-242	96906	81	45
MS29561-242	96906	82	15
MS29561-242	96906	83	21L
MS29561-242	96906	83	25
MS29561-242	96906	KITS	
MS29561-243	96906	BULK	
MS29561-245	96906	76	88
MS29561-245	96906	81	44
MS29561-245	96906	83	24
MS29561-245	96906	KITS	
MS29561-247	96906	76	124
MS29561-247	96906	88	53
MS29561-250	96906	76	125
MS29561-252	96906	71	100
MS29561-252	96906	83	143
MS29561-252	96906	KITS	
MS29561-253	96906	71	28
MS29561-253	96906	88	26
MS29561-253	96906	KITS	
MS29561-255	96906	71	29
MS29561-255	96906	KITS	
MS29561-256	96906	76	62
MS29561-256	96906	76	73A
MS29561-256	96906	KITS	
MS29561-260	96906	88	36
MS29561-261	96906	81	87
MS29561-261	96906	88	35
MS29561-262	96906	71	19
MS29561-262	96906	83	184
MS29561-262	96906	KITS	
MS29561-264	96906	71	4
MS29561-265	96906	81	81
MS29561-266	96906	76	53
MS29561-266	96906	81	91
MS29561-267	96906	BULK	
MS29561-268	96906	81	21
MS29561-268	96906	83	301
MS29561-269	96906	83	300
MS29561-273	96906	81	73
MS29561-273	96906	83	212
MS29561-274	96906	76	143
MS29561-326	96906	88	37A
MS29561-326	96906	KITS	
MS3057-16A	96906	BULK	
MS3057-3B	96906	262	24
MS3057-4A	96906	262	22
MS3057-6A	96906	BULK	
MS3100R10SL3P	96906	BULK	
MS3100R10SL3S	96906	BULK	
MS3100R10SL4P	96906	BULK	
MS3100R12S3P	96906	62	78
MS3100R14S6P	96906	76	111
MS3100R18-8S	96906	BULK	
MS3100R20-29P	96906	BULK	
MS3100R28-21P	96906	BULK	
MS3100R28-21S	96906	BULK	
MS3100R28-9P	96906	BULK	
MS3100R32-7S	96906	BULK	
MS3100R36-7SYC	96906	BULK	
MS3100R8S1P	96906	BULK	
MS3101A28-21P	96906	BULK	
MS3102R12S3P	96906	197	
MS3102R12S3S	96906	BULK	
MS3102R14S5P	96906	262	20
MS3102R18-1P	96906	230	14A
MS3102R18-1P	96906	230	15B
MS3102R18-1P	96906	231	9

REFERENCE NUMBER	MFG CODE	FIG NUMBER	ITEM NUMBER
MS3102R18-11P	96906	252	5
MS3102R20-17P	96906	210	79
MS3102R28-21P	96906	196	33
MS3106R10SL3P	96906	BULK	
MS3106R10SL3S	96906	BULK	
MS3106R10SL4S	96906	BULK	
MS3106R10SL4S	96906	BULK	
MS3106R10S2SC	96906	BULK	
MS3106R12-5SC	96906	BULK	
MS3106R12S3P	96906	BULK	
MS3106R12S3S	96906	BULK	
MS3106R14S2S	96906	BULK	
MS3106R14S5S	96906	BULK	
MS3106R14S6P	96906	BULK	
MS3106R14S6S	96906	BULK	
MS3106R14S7S	96906	BULK	
MS3106R16-11S	96906	BULK	
MS3106R16S1SC	96906	BULK	
MS3106R18-1S	96906	BULK	
MS3106R18-11S	96906	BULK	
MS3106R18-8S	96906	BULK	
MS3106R18-9P	96906	BULK	
MS3106R20-17S	96906	BULK	
MS3106R20-27S	96906	BULK	
MS3106R20-29S	96906	BULK	
MS3106R20-4S	96906	BULK	
MS3106R22-14S	96906	BULK	
MS3106R28-12P	96906	BULK	
MS3106R28-21P	96906	BULK	
MS3106R28-21S	96906	BULK	
MS3106R28-9S	96906	BULK	
MS3106R32-7P	96906	BULK	
MS3106R32-7S	96906	BULK	
MS3106R8S1S	96906	BULK	
MS3108A10S2S	96906	262	23
MS3108B10SL3S	96906	BULK	
MS3108B10SL4S	96906	262	21
MS3108R10SL3S	96906	BULK	
MS3108R12S3S	96906	BULK	
MS3108R18-1SC	96906	BULK	
MS3108R20-17S	96906	BULK	
MS3108R24-7SC	96906	BULK	
MS3110P14-19S	96906	BULK	
MS3112E10-6P	96906	215	50
MS3112E10-6P	96906	265	19
MS3112E10-6P	96906	268	71
MS3112E12-3P		KITS	
MS3112E12-3P	96906	122	3
MS3112E12-3P	96906	146	1
MS3112E14-19P	96906	188	10
MS3112E14-19P	96906	192	4
MS3112E14-19P	96906	204	7
MS3112E14-19P	96906	205	3
MS3112E14-19P	96906	183A	2
MS3112E14-5P	96906	124	3
MS3112E14S5P	96906	216	29
MS3112E14S5P	96906	216	33G
MS3112E18-11P	96906	193	30
MS3112E20-41P	96906	202	35
MS3112E20-41SW	96906	BULK	
MS3112E20-41SX	96906	BULK	
MS3112E8-4P	96906	133	30
MS3112E8-4P	96906	230	14
MS3113H14-15PX	96906	169	66
MS3113H14C15P	96906	173	55
MS3113H14C19P	96906	177	52
MS3113H14C19P	96906	186	25
MS3116E14-5S	96906	BULK	
MS3116E16-26P	96906	BULK	
MS3116F10-6S	96906	BULK	
MS3116P10-6S	96906	BULK	

REFERENCE NUMBER	MFG CODE	FIG NUMBER	ITEM NUMBER
MS3116P12-10S	96906	BULK	
MS3116P14-19P	96906	BULK	
MS3116P14-19S	96906	BULK	
MS3116P14-5S	96906	BULK	
MS3116P16-26S	96906	BULK	
MS3116P16-26SW	96906	BULK	
MS3116P16-26SY	96906	BULK	
MS3116P16-26SZ	96906	BULK	
MS3116P16-8S	96906	BULK	
MS3116P16-8SW	96906	BULK	
MS3116P18-11S	96906	BULK	
MS3116P18-32S	96906	BULK	
MS3116P20-41P	96906	BULK	
MS3116P20-41PW	96906	BULK	
MS3116P20-41PX	96906	BULK	
MS3116P20-41S	96906	BULK	
MS3116P22-21S	96906	BULK	
MS3116P22-55P	96906	BULK	
MS3116P22-55S	96906	BULK	
MS3116P24-61SW	96906	BULK	
MS3116P8-4S	96906	BULK	
MS3116P8-4SW	96906	BULK	
MS3119E14-19	96906	204	
MS3119E20-41	96906	62	86
MS3119E20-41	96906	204	
MS3120E14-19P	96906	188	10
MS3120E14-19S	96906	BULK	
MS3120E14-19SW	96906	BULK	
MS3120E16-26S	96906	BULK	
MS3120E18-11P	96906	BULK	
MS3120E20-41S	96906	BULK	
MS3120E22-21P	96906	BULK	
MS3120E22-21S	96906	BULK	
MS3120E22-55P	96906	BULK	
MS3120E24-61SW	96906	BULK	
MS3121F18-11P	96906	BULK	
MS3121F22-21P	96906	BULK	
MS3122E14-19P	96906	189A	7
MS3122E16-26P	96906	182A	38
MS3122E16-26S	96906	194	65
MS3122E18-32P	96906	189	1
MS3122E18-32P	96906	194	66
MS3122E20-41P	96906	182A	35
MS3124E14-19S	96906	BULK	
MS3126E14-15SX	96906	BULK	
MS3126E14-19P	96906	225	1
MS3126E16-26P	96906	226	1
MS3126E16-26S	96906	BULK	
MS3126E16-8S	96906	BULK	
MS3126E16-8SW	96906	BULK	
MS3126E18-32P	96906	BULK	
MS3126E18-32S	96906	BULK	
MS3126E20-39PX	96906	BULK	
MS3126F18-11S	96906	BULK	
MS3126F22-21S	96906	BULK	
MS3127E14-19S	96906	204A	9
MS3127E16-26P	96906	204A	8
MS3137E7-50S	96906	BULK	
MS3192-12A	96906	BULK	
MS3192-16A	96906	BULK	
MS3192A20A	96906	228	129
MS3192A20A	96906	182A	35
MS3192A20A	96906	182A	38
MS3192A20A	96906	204A	
MS3193-12A	96906	BULK	
MS3193-16A	96906	BULK	
MS3193A20A	96906	BULK	
MS3193A20A	96906	204A	
MS32507-263	96906	217B	23
MS33737-12	96906	KITS	
MS3420-6A	96906	BULK	

REFERENCE NUMBER	MFG CODE	FIG NUMBER	ITEM NUMBER
MS35027-263	96906	217A	6
MS35045-84	96906	277	27
MS35058-23	96906	187	34
MS35058-24	96906	187	35
MS35059-24	96906	187	37
MS35059-27	96906	BULK	
MS35190-211	96906	192	118
MS35190-212	96906	184	47
MS35190-212	96906	192	61
MS35190-212	96906	182A	13
MS35190-216	96906	BULK KITS	
MS35190-220	96906	215	39
MS35190-220	96906	230	37
MS35190-220	96906	231	107
MS35190-220	96906	231	85
MS35190-220	96906	190A	10
MS35190-221	96906	190A	13
MS35190-221	96906	67A	15
MS35190-222	96906	BULK	
MS35190-222	96906	QC1	
MS35190-223	96906	216	67
MS35190-223	96906	67A	22
MS35190-224	96906	67A	29
MS35190-224	96906	BULK	
MS35190-227	96906	190	6
MS35190-236	96906	192	3
MS35190-236	96906	192	61A
MS35190-236	96906	192	96
MS35190-236	96906	260	34
MS35190-236	96906	150A	22
MS35190-236	96906	192	3
MS35190-238	96906	192	95
MS35190-238	96906	205	22
MS35190-238	96906	BULK	
MS35190-239	96906	BULK	
MS35190-254	96906	BULK	
MS35190-256	96906	230	27
MS35190-258	96906	231	67
MS35190-258	96906	BULK	
MS35190-278	96906	BULK	
MS35190-279	96906	BULK	
MS35191-273	96906	280	5
MS35191-291	96906	62	77
MS352016-216	96906	192	90
MS35206-201	96906	67A	35
MS35206-201	96906	190	85
MS35206-202	96906	190	44
MS35206-203	96906	205	24
MS35206-204	96906	182A	12
MS35206-204	96906	194	48
MS35206-205	96906	194	7
MS35206-205	96906	BULK	
MS35206-205	96906	190	112
MS35206-207	96906	192	25
MS35206-207	96906	193	49
MS35206-207	96906	205	9
MS35206-207	96906	234	18
MS35206-207	96906	234	33
MS35206-208	96906	190	58
MS35206-209	96906	265	167
MS35206-209	96906	265	226
MS35206-209	96906	268	65
MS35206-209	96906	26	29
MS35206-212	96906	67A	10
MS35206-212	96906	182	
MS35206-213	96906	190	104
MS35206-213	96906	190	119
MS35206-213	96906	190	133
MS35206-213	96906	190	31
MS35206-213	96906	190	95

REFERENCE NUMBER	MFG CODE	FIG NUMBER	ITEM NUMBER
MS35206-213	96906	194	4
MS35206-213	96906	197	32
MS35206-213	96906	204	
MS35206-213	96906	205	2
MS35206-213	96906	205	34
MS35206-213	96906	182A	3
MS35206-213	96906	182A	8
MS35206-213	96906	189A	40
MS35206-213	96906	189A	84
MS35206-214	96906	182	
MS35206-214	96906	194	73
MS35206-214	96906	197	54
MS35206-214	96906	197	9
MS35206-214	96906	182A	34
MS35206-214	96906	182A	37
MS35206-214	96906	182A	47
MS35206-214	96906	189A	17
MS35206-214	96906	189A	30
MS35206-214	96906	189A	33
MS35206-215	96906	QC1	
MS35206-215	96906	182	
MS35206-215	96906	183	34
MS35206-215	96906	188	10
MS35206-215	96906	189	2
MS35206-215	96906	190	155
MS35206-215	96906	190	61
MS35206-215	96906	190	88
MS35206-215	96906	190	99
MS35206-215	96906	191	31
MS35206-215	96906	192	49
MS35206-215	96906	193	91
MS35206-215	96906	195	33C
MS35206-215	96906	198	
MS35206-215	96906	202	33
MS35206-215	96906	203	4
MS35206-215	96906	204	13
MS35206-215	96906	204	8
MS35206-215	96906	210	80
MS35206-215	96906	210	97
MS35206-215	96906	226	34
MS35206-215	96906	228	
MS35206-215	96906	275	
MS35206-215	96906	KITS	
MS35206-216	96906	76	112
MS35206-216	96906	192	30
MS35206-216	96906	194	12
MS35206-216	96906	277	
MS35206-217	96906	33	34D
MS35206-217	96906	42	
MS35206-217	96906	182	
MS35206-217	96906	185	8
MS35206-217	96906	188	
MS35206-217	96906	190	127
MS35206-217	96906	194	60
MS35206-217	96906	196	
MS35206-217	96906	196	21A
MS35206-217	96906	204	
MS35206-217	96906	204	
MS35206-217	96906	KITS	
MS35206-218	96906	188	
MS35206-218	96906	200	
MS35206-219	96906	190	123
MS35206-219	96906	205	28
MS35206-219	96906	277	
MS35206-220	96906	275	
MS35206-221	96906	190	116
MS35206-222	96906	185	16
MS35206-226	96906	232	5
MS35206-226	96906	260	50
MS35206-226	96906	260	52
MS35206-226	96906	197A	10
MS35206-226	96906	197A	15
MS35206-228	96906	182	
MS35206-228	96906	188	
MS35206-228	96906	188	15
MS35206-228	96906	190	3
MS35206-228	96906	190	67
MS35206-228	96906	190	82
MS35206-228	96906	191	22
MS35206-228	96906	192	17
MS35206-228	96906	192	2
MS35206-228	96906	192	69
MS35206-228	96906	194	1
MS35206-228	96906	194	225
MS35206-228	96906	194	42
MS35206-228	96906	195	20
MS35206-228	96906	196	
MS35206-228	96906	196	40
MS35206-228	96906	200	
MS35206-228	96906	204	
MS35206-228	96906	204	4
MS35206-228	96906	210	11
MS35206-228	96906	210	19
MS35206-228	96906	210	34
MS35206-228	96906	210	93
MS35206-228	96906	222	
MS35206-228	96906	226	38
MS35206-228	96906	233	18
MS35206-228	96906	278	
MS35206-229	96906	194	15
MS35206-230	96906	157	89
MS35206-230	96906	158	75
MS35206-230	96906	188	
MS35206-230	96906	193	44A
MS35206-230	96906	194	41
MS35206-230	96906	196	26
MS35206-230	96906	196	34
MS35206-230	96906	196	51
MS35206-230	96906	196	55
MS35206-230	96906	202	25
MS35206-230	96906	204	
MS35206-230	96906	205	4
MS35206-230	96906	207	
MS35206-230	96906	276	
MS35206-230	96906	277	
MS35206-230	96906	278	
MS35206-230	96906	KITS	
MS35206-230	96906	182A	30
MS35206-230	96906	182A	43
MS35206-230	96906	197A	2
MS35206-231	96906	182	
MS35206-231	96906	187	28
MS35206-231	96906	190	141
MS35206-231	96906	210	83
MS35206-231	96906	275	
MS35206-231	96906	277	
MS35206-232	96906	188	47
MS35206-232	96906	196	13
MS35206-232	88044	275	
MS35206-233	96906	BULK	
MS35206-233	96906	182A	29
MS35206-237	96906	157	10
MS35206-237	96906	158	11
MS35206-240	96906	190	21
MS35206-241	96906	188	
MS35206-241	96906	197	42
MS35206-243	96906	30	39
MS35206-243	96906	45	19
MS35206-243	96906	196	7
MS35206-243	96906	197	16
MS35206-243	96906	198	
MS35206-243	96906	210	70

REFERENCE NUMBER	MFG CODE	FIG NUMBER	ITEM NUMBER
MS35206-243	96906	277	
MS35206-244	96906	BULK	
MS35206-245	96906	39	
MS35206-245	96906	182	
MS35206-245	96906	188	
MS35206-245	96906	189	11
MS35206-245	96906	189	6
MS35206-245	96906	196	
MS35206-245	96906	196	10
MS35206-245	96906	196	2
MS35206-245	96906	198	
MS35206-245	96906	200	
MS35206-245	96906	204	
MS35206-245	96906	204	19
MS35206-245	96906	209	
MS35206-245	96906	264	9A
MS35206-245	96906	276	4
MS35206-245	96906	277	
MS35206-245	96906	277	
MS35206-245	96906	279	
MS35206-246	96906	277	
MS35206-246	96906	278	
MS35206-246	96906	189A	6
MS35206-247	96906	204	
MS35206-247	96906	204	2
MS35206-247	96906	251	58D
MS35206-247	96906	277	
MS35206-248	96906	198	42
MS35206-248	96906	KITS	
MS35206-249	96906	BULK	
MS35206-250	96906	200	
MS35206-250	96906	200	
MS35206-253	96906	BULK	
MS35206-257	96906	210	37
MS35206-260	96906	BULK	
MS35206-261	96906	207	
MS35206-263	96906	71	1
MS35206-264	96906	BULK	
MS35206-266	96906	BULK	
MS35206-267	96906	BULK	
MS35206-268	96906	BULK	
MS35206-294	96906	26	
MS35206-322	96906	265	41
MS35206-326	96906	183	39
MS35206-329	96906	100	11
MS35206-329	96906	KITS	
MS35207-226	96906	178	102
MS35207-226	96906	178	104
MS35207-226	96906	182	
MS35207-226	96906	276	
MS35207-230	96906	275	
MS35207-244	96906	BULK	
MS35207-245	96906	195	35
MS35207-245	96906	195	38
MS35207-245	96906	BULK	
MS35207-245	96906	KITS	
MS35207-247	96906	191	28
MS35207-247	96906	191	3
MS35207-247	96906	191	36
MS35207-247	96906	195	
MS35207-247	96906	195	30
MS35207-247	96906	195	32A
MS35207-247	96906	KITS	
MS35207-259	96906	219	
MS35207-260	96906	204	
MS35207-261	96906	58	11
MS35207-261	96906	62	
MS35207-261	96906	F18	13
MS35207-261	96906	QC1	
MS35207-261	96906	109	
MS35207-261	96906	188	

REFERENCE NUMBER	MFG CODE	FIG NUMBER	ITEM NUMBER
MS35207-261	96906	188	49A
MS35207-261	96906	196	49
MS35207-261	96906	196	7C
MS35207-261	96906	209	
MS35207-261	96906	211	
MS35207-261	96906	218	
MS35207-261	96906	218	73C
MS35207-261	96906	218	73D
MS35207-261	96906	218	74A
MS35207-261	96906	219	
MS35207-261	96906	251	42
MS35207-261	96906	275	
MS35207-261	96906	275	
MS35207-261	96906	277	
MS35207-261	96906	278	
MS35207-261	96906	BULK	
MS35207-261	96906	KITS	
MS35207-261	96906	189A	19
MS35207-261	96906	219A	176
MS35207-261	96906	219A	71
MS35207-261	96906	219A	80
MS35207-262	96906	BULK	
MS35207-263	96906	10	
MS35207-263	96906	33	37
MS35207-263	96906	34	
MS35207-263	96906	42	
MS35207-263	96906	44	11C
MS35207-263	96906	45	23
MS35207-263	96906	62	37
MS35207-263	96906	76	11C
MS35207-263	96906	95	123
MS35207-263	96906	95	13
MS35207-263	96906	95	139
MS35207-263	96906	95	14
MS35207-263	96906	95	140
MS35207-263	96906	95	15
MS35207-263	96906	95	49
MS35207-263	96906	95	57
MS35207-263	96906	95	7
MS35207-263	96906	95	71
MS35207-263	96906	95	75
MS35207-263	96906	95	82
MS35207-263	96906	95	99
MS35207-263	96906	QC1	
MS35207-263	96906	109	
MS35207-263	96906	11A	18B
MS35207-263	96906	110	36A
MS35207-263	96906	110	40A
MS35207-263	96906	110	46A
MS35207-263	96906	110	54
MS35207-263	96906	110	57
MS35207-263	96906	110	63
MS35207-263	96906	110	66
MS35207-263	96906	110	74
MS35207-263	96906	110	75
MS35207-263	96906	110	76
MS35207-263	96906	110	77
MS35207-263	96906	110	87
MS35207-263	96906	110	89
MS35207-263	96906	110	90
MS35207-263	96906	110	95
MS35207-263	96906	110	97
MS35207-263	96906	112	106
MS35207-263	96906	112	109
MS35207-263	96906	112	17
MS35207-263	96906	112	28
MS35207-263	96906	112	32
MS35207-263	96906	112	41
MS35207-263	96906	112	45
MS35207-263	96906	112	53
MS35207-263	96906	112	63

REFERENCE NUMBER	MFG CODE	FIG NUMBER	ITEM NUMBER
MS35207-263	96906	112	69
MS35207-263	96906	112	9
MS35207-263	96906	112	91
MS35207-263	96906	115	
MS35207-263	96906	116	
MS35207-263	96906	116	28A
MS35207-263	96906	117	
MS35207-263	96906	119	
MS35207-263	96906	129	
MS35207-263	96906	139	
MS35207-263	96906	139	100
MS35207-263	96906	139	102
MS35207-263	96906	143	
MS35207-263	96906	178	122
MS35207-263	96906	179	39
MS35207-263	96906	182	
MS35207-263	96906	188	
MS35207-263	96906	188	4
MS35207-263	96906	188	42
MS35207-263	96906	195	4
MS35207-263	96906	195	44
MS35207-263	96906	196	
MS35207-263	96906	198	
MS35207-263	96906	198	
MS35207-263	96906	198	22
MS35207-263	96906	198	48
MS35207-263	96906	200	
MS35207-263	96906	204	
MS35207-263	96906	204	1A
MS35207-263	96906	206	10
MS35207-263	96906	206	6
MS35207-263	96906	206	9
MS35207-263	96906	208	
MS35207-263	96906	208	27
MS35207-263	96906	209	
MS35207-263	96906	209	1
MS35207-263	96906	213	
MS35207-263	96906	217	
MS35207-263	96906	218	
MS35207-263	96906	219	
MS35207-263	96906	220	
MS35207-263	96906	221	101
MS35207-263	96906	221	102
MS35207-263	96906	221	107
MS35207-263	96906	221	113
MS35207-263	96906	221	114
MS35207-263	96906	221	116
MS35207-263	96906	221	127
MS35207-263	96906	221	128
MS35207-263	96906	221	130
MS35207-263	96906	221	138
MS35207-263	96906	221	139
MS35207-263	96906	221	18
MS35207-263	96906	221	21
MS35207-263	96906	221	23
MS35207-263	96906	221	40
MS35207-263	96906	221	42
MS35207-263	96906	221	55
MS35207-263	96906	221	58
MS35207-263	96906	221	6
MS35207-263	96906	221	65
MS35207-263	96906	221	68
MS35207-263	96906	221	72
MS35207-263	96906	221	75
MS35207-263	96906	221	78
MS35207-263	96906	221	83
MS35207-263	96906	221	84
MS35207-263	96906	221	88
MS35207-263	96906	221	94
MS35207-263	96906	226	22
MS35207-263	96906	249	20B

REFERENCE NUMBER	MFG CODE	FIG NUMBER	ITEM NUMBER
MS35207-263	96906	249	29
MS35207-263	96906	253	24B
MS35207-263	96906	258	7C
MS35207-263	96906	273	11A
MS35207-263	96906	273	18E
MS35207-263	96906	275	
MS35207-263	96906	277	
MS35207-263	96906	278	
MS35207-263	96906	BULK	
MS35207-263	96906	KITS	
MS35207-263	96906	217A	13
MS35207-263	96906	217A	14
MS35207-263	96906	217A	15
MS35207-263	96906	217A	22
MS35207-263	96906	217A	23
MS35207-263	96906	217A	5
MS35207-263	96906	217A	7
MS35207-263	96906	217B	10
MS35207-263	96906	217B	16
MS35207-263	96906	217B	17
MS35207-263	96906	217B	24
MS35207-263	96906	217B	27
MS35207-263	96906	217B	28
MS35207-263	96906	217B	3
MS35207-263	96906	217B	5
MS35207-263	96906	217B	6
MS35207-263	96906	217B	9
MS35207-263	96906	219A	181
MS35207-263	96906	219A	185
MS35207-263	96906	219A	76
MS35207-263	96906	219A	85
MS35207-264	96906	28	
MS35207-264	96906	34	
MS35207-264	96906	42	9A
MS35207-264	96906	62	
MS35207-264	96906	95	107
MS35207-264	96906	95	108
MS35207-264	96906	95	110
MS35207-264	96906	95	41
MS35207-264	96906	95	44
MS35207-264	96906	95	83
MS35207-264	96906	95	91
MS35207-264	96906	95	96
MS35207-264	96906	QC1	
MS35207-264	96906	109	
MS35207-264	96906	112	20
MS35207-264	96906	112	4
MS35207-264	96906	115	
MS35207-264	96906	116	
MS35207-264	96906	117	
MS35207-264	96906	119	
MS35207-264	96906	129	
MS35207-264	96906	139	
MS35207-264	96906	139	104
MS35207-264	96906	139	115
MS35207-264	96906	143	
MS35207-264	96906	178	123
MS35207-264	96906	179	40
MS35207-264	96906	182	
MS35207-264	96906	188	
MS35207-264	96906	188	11
MS35207-264	96906	188	19
MS35207-264	96906	188	52
MS35207-264	96906	196	
MS35207-264	96906	198	
MS35207-264	96906	198	27
MS35207-264	96906	204	
MS35207-264	96906	204	6
MS35207-264	96906	207	
MS35207-264	96906	207	
MS35207-264	96906	207	

REFERENCE NUMBER	MFG CODE	FIG NUMBER	ITEM NUMBER
MS35207-264	96906	207	
MS35207-264	96906	207	
MS35207-264	96906	208	40
MS35207-264	96906	213	
MS35207-264	96906	218	73E
MS35207-264	96906	220	
MS35207-264	96906	221	
MS35207-264	96906	221	132
MS35207-264	96906	276	
MS35207-264	96906	277	
MS35207-264	96906	KITS	
MS35207-264	96906	217B	2
MS35207-265	96906	62	
MS35207-265	96906	95	161
MS35207-265	96906	95	42
MS35207-265	96906	95	43
MS35207-265	96906	109	
MS35207-265	96906	112	10
MS35207-265	96906	112	110
MS35207-265	96906	115	
MS35207-265	96906	116	
MS35207-265	96906	117	
MS35207-265	96906	119	
MS35207-265	96906	129	
MS35207-265	96906	139	
MS35207-265	96906	178	119
MS35207-265	96906	182	
MS35207-265	96906	182	
MS35207-265	96906	191	1
MS35207-265	96906	191	35
MS35207-265	96906	191	41
MS35207-265	96906	191	9
MS35207-265	96906	195	1
MS35207-265	96906	195	24
MS35207-265	96906	195	3
MS35207-265	96906	195	40
MS35207-265	96906	195	48
MS35207-265	96906	196	
MS35207-265	96906	204	
MS35207-265	96906	206	8
MS35207-265	96906	208	3
MS35207-265	96906	213	
MS35207-265	96906	220	
MS35207-265	96906	221	119
MS35207-265	96906	221	48
MS35207-265	96906	221	8
MS35207-265	96906	222	
MS35207-265	96906	276	
MS35207-265	96906	278	
MS35207-265	96906	KITS	
MS35207-266	96906	95	88
MS35207-266	96906	QC1	
MS35207-266	96906	109	
MS35207-266	96906	112	113
MS35207-266	96906	112	116
MS35207-266	96906	112	57
MS35207-266	96906	119	
MS35207-266	96906	129	
MS35207-266	96906	178	124
MS35207-266	96906	179	41
MS35207-266	96906	220	
MS35207-266	96906	221	54
MS35207-266	96906	276	
MS35207-266	96906	278	
MS35207-266	96906	KITS	
MS35207-266	96906	219A	174
MS35207-266	96906	219A	69
MS35207-267	96906	95	104
MS35207-267	96906	95	161
MS35207-267	96906	95	85
MS35207-267	96906	95	86
MS35207-267	96906	100	8
MS35207-267	96906	109	
MS35207-267	96906	110	58
MS35207-267	96906	110	98
MS35207-267	96906	112	105
MS35207-267	96906	112	26
MS35207-267	96906	112	37
MS35207-267	96906	112	5
MS35207-267	96906	112	61
MS35207-267	96906	115	
MS35207-267	96906	116	
MS35207-267	96906	117	
MS35207-267	96906	119	
MS35207-267	96906	129	
MS35207-267	96906	139	
MS35207-267	96906	139	114
MS35207-267	96906	143	
MS35207-267	96906	178	120
MS35207-267	96906	178	145
MS35207-267	96906	204	24
MS35207-267	96906	206	7
MS35207-267	96906	208	
MS35207-267	96906	208	31
MS35207-267	96906	213	
MS35207-267	96906	220	
MS35207-267	96906	221	43
MS35207-267	96906	277	
MS35207-267	96906	KITS	
MS35207-267	96906	219A	88
MS35207-268	96906	15	45A
MS35207-268	96906	95	122
MS35207-268	96906	109	
MS35207-268	96906	110	96
MS35207-268	96906	117	
MS35207-268	96906	119	
MS35207-268	96906	143	
MS35207-268	96906	178	121
MS35207-268	96906	179	38
MS35207-268	96906	221	120
MS35207-268	96906	257	
MS35207-269	96906	95	163
MS35207-269	96906	95	84
MS35207-269	96906	109	
MS35207-269	96906	115	
MS35207-269	96906	117	
MS35207-269	96906	119	
MS35207-269	96906	129	
MS35207-269	96906	179	42
MS35207-269	96906	213	
MS35207-269	96906	221	14
MS35207-269	96906	253	27A
MS35207-269	96906	277	
MS35207-269	96906	KITS	
MS35207-270	96906	95	138
MS35207-270	96906	95	90
MS35207-270	96906	115	
MS35207-270	96906	117	
MS35207-270	96906	119	
MS35207-270	96906	129	
MS35207-270	96906	178	125
MS35207-270	96906	179	44
MS35207-270	96906	205	7
MS35207-270	96906	275	
MS35207-271	96906	95	52
MS35207-271	96906	109	
MS35207-271	96906	115	
MS35207-271	96906	117	
MS35207-271	96906	119	
MS35207-271	96906	129	
MS35207-271	96906	139	107
MS35207-271	96906	139	110

REFERENCE NUMBER	MFG CODE	FIG NUMBER	ITEM NUMBER
MS35207-271	96906	178	146
MS35207-271	96906	179	
MS35207-271	96906	BULK	
MS35207-272	96906	95	121
MS35207-272	96906	116	
MS35207-272	96906	117	
MS35207-272	96906	119	
MS35207-272	96906	129	
MS35207-272	96906	139	
MS35207-272	96906	139	116
MS35207-272	96906	210	65
MS35207-272	96906	220	
MS35207-272	88044	221	15
MS35207-272	96906	221	47
MS35207-272	96906	KITS	
MS35207-273	96906	115	
MS35207-273	96906	116	
MS35207-273	96906	117	
MS35207-273	96906	129	
MS35207-273	96906	139	
MS35207-274	96906	62	
MS35207-274	96906	QC1	
MS35207-274	96906	116	
MS35207-274	96906	117	
MS35207-275	96906	62	81
MS35207-275	96906	95	100
MS35207-275	96906	95	87
MS35207-275	96906	95	89
MS35207-275	96906	110	71
MS35207-275	96906	221	18A
MS35207-275	96906	221	20A
MS35207-279	96906	209	
MS35207-280	96906	34	
MS35207-280	96906	207	
MS35207-288	96906	BULK	
MS35207-289	96906	20	62
MS35207263	96906	2178	2
MS35207264	96906	112	108
MS35214-13	96906	192	
MS35214-13	96906	192	28
MS35214-13	96906	192	5
MS35214-13	96906	192	51
MS35214-14	96906	BULK	
MS35214-16	96906	BULK	
MS35214-18	96906	BULK	
MS35214-2	96906	160	6
MS35214-2	96906	160	8
MS35214-25	96906	100	24
MS35214-26	96906	157	26
MS35214-26	96906	158	59
MS35214-26	96906	KITS	
MS35214-27	96906	157	75
MS35214-27	96906	184	56
MS35214-27	96906	204	
MS35214-28	96906	158	19
MS35214-28	96906	187	10
MS35214-28	96906	187	17
MS35214-28	96906	201	15
MS35214-28	96906	201	25
MS35214-28	96906	201	51
MS35214-28	96906	KITS	
MS35214-28	96906	183A	23
MS35214-29	96906	157	71
MS35214-29	96906	167	5
MS35214-29	96906	188	58
MS35214-29	96906	KITS	
MS35214-35	96906	BULK	
MS35214-42	96906	188	63
MS35214-57	96906	BULK	
MS35215-42	96906	BULK	
MS35215-55	96906	BULK	
MS35215-58	96906	188	60
MS35218-42	96906	BULK	
MS35219-55	96906	117	
MS35219-55	96906	234	27
MS35219-56	96906	BULK	
MS35219-57	96906	BULK	
MS35219-60	96906	BULK	
MS35263-40	96906	197	43
MS35265-12		KITS	
MS35265-12	96906	122	4
MS35265-12	96906	130	15
MS35265-12	96906	215	41
MS35265-12	96906	230	15
MS35265-12	96906	231	25
MS35265-12	96906	232	23
MS35265-12	96906	232	8
MS35265-13	96906	132	2
MS35265-13	96906	146	2
MS35265-13	96906	212	24
MS35265-13	96906	216	27
MS35265-13	96906	230	15A
MS35265-13	96906	230	20
MS35265-13	96906	231	10
MS35265-13	96906	231	59
MS35265-13	96906	260	18
MS35265-13	96906	265	153
MS35265-13	96906	268	149C
MS35265-13	96906	268	151
MS35265-13	96906	67A	17
MS35265-13	96906	67A	44
MS35265-13	96906	67A	7
MS35265-14	96906	215	48
MS35265-14	96906	216	33E
MS35265-14	96906	230	17A
MS35265-14	96906	231	13
MS35265-14	96906	231	18
MS35265-14	96906	252	6
MS35265-14	96906	268	195B
MS35265-14	96906	190A	8
MS35265-15	96906	265	155
MS35265-15	96906	265	18
MS35265-15	96906	265	232
MS35265-15	96906	268	70
MS35265-16	96906	231	115
MS35265-16	96906	265	174
MS35265-16	96906	268	134
MS35265-16	96906	67A	4
MS35265-16	96906	KITS	
MS35265-18	96906	231	22
MS35265-19	96906	192	66
MS35265-19	96906	214	1
MS35265-19	96906	232	2
MS35265-19	96906	67A	3
MS35265-2	96906	216	74
MS35265-2	96906	230	19
MS35265-2	96906	232	31
MS35265-2	96906	265	37
MS35265-2	96906	268	87
MS35265-2	96906	67A	68
MS35265-20	96906	67A	1
MS35265-26	96906	215	46
MS35265-26	96906	234	13
MS35265-27	96906	83	35H
MS35265-27	96906	212	2
MS35265-27	96906	150A	14
MS35265-28	96906	260	38
MS35265-28	96906	260	41
MS35265-28	96906	260	7
MS35265-28	96906	67A	45
MS35265-3	96906	231	38
MS35265-3	96906	233	25

REFERENCE NUMBER	MFG CODE	FIG NUMBER	ITEM NUMBER
MS35265-3	96906	265	69
MS35265-3	96906	268	42
MS35265-31	96906	BULK	
MS35265-33	96906	247	3A
MS35265-33	96906	247	6
MS35265-33	96906	265	210
MS35265-4	96906	190A	6
MS35265-45	96906	212	16
MS35265-47	96906	BULK	
MS35265-48	96906	228	
MS35265-49	96906	276	2
MS35265-59	96906	75	109
MS35265-6	96906	216	34
MS35265-64	96906	212	9
MS35265-71	96906	83	35A
MS35265-76	96906	247	1
MS35265-77	96906	262	31
MS35266-107	96906	BULK	
MS35266-112	96906	207	
MS35266-12	96906	30	27
MS35266-59	96906	111	13
MS35266-60	96906	57	12
MS35266-61	96906	265	218
MS35266-61	96906	268	214
MS35266-62	96906	BULK	
MS35266-64	96906	215	3
MS35266-64	96906	261	32
MS35266-64	96906	261	8
MS35266-64	96906	262	33
MS35266-64	96906	BULK	
MS35266-68	96906	268	271
MS35266-69	96906	113	2
MS35266-7	96906	261	28
MS35266-79	96906	160	27
MS35273-12	96906	160	23
MS35273-14	96906	160	39
MS35273-2	96906	30	30
MS35273-3	96906	160	63
MS35273-3		KITS	
MS35275-13	96906	BULK	
MS35275-202	96906	BULK	
MS35275-203	96906	68	9
MS35275-204	96906	248	110
MS35275-205	96906	192	77
MS35275-208	96906	70	25
MS35275-212	96906	78	1
MS35275-212	96906	82	1
MS35275-212	96906	248	97
MS35275-212	96906	190A	1
MS35275-212	96906	52	1
MS35275-213	96906	52	2
MS35275-213	96906	105	3
MS35275-213	96906	105	6
MS35275-213	96906	124	4
MS35275-213	96906	133	29
MS35275-213	96906	133	33
MS35275-213	96906	137	4
MS35275-213	96906	137	9
MS35275-213	96906	105	20
MS35275-214	96906	127	1
MS35275-214	96906	133	32
MS35275-214	96906	248	83
MS35275-214	96906	137	15
MS35275-215	96906	100	21
MS35275-220	96906	67A	5
MS35275-222	96906	64A	18
MS35275-226	96906	64A	52
MS35275-226	96906	248	100
MS35275-227	96906	248	11
MS35275-227	96906	248	2
MS35275-227	96906	62	4
MS35275-228	96906	KITS	
MS35275-228	96906	QC1	168
MS35275-241	96906	64A	45
MS35275-241	96906	64A	63
MS35275-243	96906	69	50
MS35275-245	96906	7	28
MS35275-245	96906	96	13
MS35275-245	96906	248	36
MS35275-254	96906	BULK	
MS35275-261	96906	150	6
MS35275-262	96906	150	5
MS35275-263	96906	259	15
MS35275-41	96906	266	2
MS35276-218	96906	KITS	
MS35276-259	96906	BULK	
MS35276-261	96906	BULK	
MS35276-264	96906	BULK	
MS35276-265	96906	248	63
MS35276-60	96906	265	77
MS35277-26	96906	268	35
MS35277-26	96906	265	281
MS35277-44	96906	268	245
MS35277-44	96906	183	
MS35333-121	96906	183	38
MS35333-121	96906	187	21
MS35333-121	96906	183A	74
MS35333-121	96906	183A	78
MS35333-121	96906	160	31
MS35333-35	96906	162	18
MS35333-35	96906	190	113
MS35333-35	96906	190	45
MS35333-35	96906	190	59
MS35333-35	96906	190	86
MS35333-35	96906	197	10
MS35333-36	93609	197	12
MS35333-36	96906	192	18
MS35333-37	96906	260	42
MS35333-37	96906	260	51
MS35333-37	96906	260	53
MS35333-37	96906	197	44
MS35333-38	96906	18	
MS35333-39	96906	275	
MS35333-39	96906	BULK	
MS35333-41	96906	188	
MS35333-43	96906	194	53
MS35333-45	96906	KITS	
MS35333-88	96906	260	28
MS35335-39	96906	280	14
MS35335-39	96906	228	83
MS35335-60	96906	228	86
MS35335-60	96906	275	
MS35335-60	96906	BULK	
MS35335-61	96906	BULK	
MS35336-15	96906	BULK	
MS35336-21	96906	BULK	
MS35336-23	96906	192	
MS35336-3	96906	190	108
MS35336-9	96906	248	116
MS35336-9	96906	260	35
MS35336-9	96906	176	20
MS35338-134	96906	176	8
MS35338-134	96906	177	19
MS35338-134	96906	177	7
MS35338-134	96906	176	27
MS35338-135	96906	176	30
MS35338-135	96906	177	27
MS35338-135	96906	177	28
MS35338-135	96906	197	63
MS35338-137	96906	204	2A
MS35338-138	96906	BULK	
MS35338-139	96906	118	

REFERENCE NUMBER	MFG CODE	FIG NUMBER	ITEM NUMBER
MS35338-139	96906	KITS	
MS35338-39	96906	160	40
MS35338-39	96906	160	52
MS35338-39	96906	160	64
MS35338-39	96906	192	91
MS35338-39	96906	193	51
MS35338-39	96906	194	46
MS35338-39	96906	194	8
MS35338-39	96906	216	75
MS35338-39	96906	232	32
MS35338-40	96906	26	
MS35338-40	96906	30	22
MS35338-40	96906	30	28
MS35338-40	96906	30	33
MS35338-40	96906	76	112B
MS35338-40	96906	160	24
MS35338-40	96906	160	28
MS35338-40	96906	190	100
MS35338-40	96906	190	105
MS35338-40	96906	190	117
MS35338-40	96906	190	120
MS35338-40	96906	190	124
MS35338-40	96906	190	128
MS35338-40	96906	190	134
MS35338-40	96906	190	156
MS35338-40	96906	190	32
MS35338-40	96906	190	62
MS35338-40	96906	190	96
MS35338-40	96906	192	6
MS35338-40	96906	193	55
MS35338-40	96906	193	79
MS35338-40	96906	193	84
MS35338-40	96906	193	93
MS35338-40	96906	194	13
MS35338-40	96906	194	22
MS35338-40	96906	194	26
MS35338-40	96906	194	31
MS35338-40	96906	194	34
MS35338-40	96906	194	71
MS35338-40	96906	197	56
MS35338-40	96906	197	64
MS35338-40	96906	205	2A
MS35338-40	96906	205	28B
MS35338-40	96906	205	34A
MS35338-40	96906	212	25
MS35338-40	96906	215	42
MS35338-40	96906	232	14
MS35338-40	96906	232	26
MS35338-40	96906	67A	12
MS35338-40	96906	189A	31
MS35338-41	96906	83	35I
MS35338-41	96906	167	6
MS35338-41	96906	182	
MS35338-41	96906	189	8
MS35338-41	96906	190	137
MS35338-41	96906	190	27
MS35338-41	96906	190	36
MS35338-41	96906	190	63
MS35338-41	96906	190	68
MS35338-41	96906	190	83
MS35338-41	96906	191	23
MS35338-41	96906	193	41
MS35338-41	96906	194	18
MS35338-41	96906	194	227
MS35338-41	96906	194	3
MS35338-41	96906	194	39
MS35338-41	96906	195	21
MS35338-41	96906	196	41
MS35338-41	96906	202	32
MS35338-41	96906	204	
MS35338-41	96906	205	15A
MS35338-41	96906	205	4A
MS35338-41	96906	210	35
MS35338-41	96906	226	37
MS35338-41	96906	232	40
MS35338-41	96906	232	6
MS35338-41	96906	233	19
MS35338-41	96906	275	
MS35338-41	96906	KITS	
MS35338-41	96906	182A	40
MS35338-41	96906	189A	28
MS35338-42	96906	30	40
MS35338-42	96906	83	35E
MS35338-42	96906	QC1	
MS35338-42	96906	167	12
MS35338-42	96906	190	22
MS35338-42	96906	210	71
MS35338-42	96906	228	
MS35338-43	96906	28	
MS35338-43	96906	94	12A
MS35338-43	96906	188	
MS35338-43	96906	188	52B
MS35338-43	96906	190	47
MS35338-43	96906	191	15
MS35338-43	96906	193	63
MS35338-43	96906	195	12
MS35338-43	96906	195	46
MS35338-43	96906	196	
MS35338-43	96906	196	14
MS35338-43	96906	204	6
MS35338-43	96906	205	7A
MS35338-43	96906	209	
MS35338-43	96906	210	90
MS35338-43	96906	213	
MS35338-43	96906	225	9
MS35338-43	96906	270	16C
MS35338-43	96906	278	
MS35338-43	96906	281	
MS35338-43	96906	KITS	
MS35338-43	96906	189A	20
MS35338-44	96906	197	39
MS35338-44	96906	207	
MS35338-44	96906	210	22
MS35338-44	96906	210	5
MS35338-44	96906	210	56
MS35338-44	96906	210	60
MS35338-44	96906	210	8
MS35338-46	96906	196	
MS35338-46	96906	207	
MS35338-46	96906	210	29
MS35338-46	96906	210	32
MS35338-50	96906	BULK	
MS35338-96	96906	BULK	
MS35338-97	96906	BULK	
MS35338-98	96906	178	68
MS35340-39	96906	234	19
MS35340-39	96906	BULK	
MS35368-306B	96906	KITS	
MS35457-15	96906	BULK	
MS35458-17	96906	267	1
MS35458-36	96906	63	58
MS35458-37	96906	274	16
MS35458-41	96906	63	32
MS35461-1	96906	149	47
MS35478-1683		KITS	
MS35478-307	96906	196	
MS35478-307	96906	33	34H
MS35478-307	96906	188	
MS35478-307	96906	188	18C
MS35478-307	96906	196	
MS35489-10	96906	204	
	96906	BULK	

REFERENCE NUMBER	MFG CODE	FIG NUMBER	ITEM NUMBER
MS35489-109	96906	207	8
MS35489-11	96906	188	23
MS35489-11	96906	188	53
MS35489-11	96906	196	15
MS35489-11	96906	252	15
MS35489-12	96906	117	
MS35489-12	96906	117	19H
MS35489-12	96906	129	41D
MS35489-12	96906	178	138
MS35489-12	96906	221	17
MS35489-12	96906	KITS	
MS35489-120	96906	BULK	
MS35489-13	96906	BULK	
MS35489-135	96906	BULK	
MS35489-14	96906	196	64
MS35489-14	96906	225	3
MS35489-14	96906	KITS	
MS35489-15	96906	207	
MS35489-16	96906	265	23
MS35489-16	96906	268	69
MS35489-17	96906	28	8
MS35489-18	96906	208	14A
MS35489-18	96906	KITS	
MS35489-19	96906	178	111
MS35489-19	96906	251	40
MS35489-2	96906	BULK	
MS35489-22	96906	207	
MS35489-22	96906	KITS	
MS35489-23	96906	BULK	
MS35489-27	96906	198	39
MS35489-27	96906	209	36
MS35489-27	96906	KITS	
MS35489-33	96906	BULK	
MS35489-35	96906	76	113
MS35489-35	96906	KITS	
MS35489-4	96906	190	91
MS35489-40	96906	KITS	
MS35489-43	96906	129	40C
MS35489-43	96906	KITS	
MS35489-46	96906	BULK	
MS35489-5	96906	BULK	
MS35489-6	96906	204	
MS35489-6	96906	213	
MS35489-6	96906	221	85
MS35489-6	96906	256	26
MS35489-6	96906	KITS	
MS35489-6	96906	BULK	
MS35489-7	96906	256	25
MS35489-9	96906	BULK	
MS35489-95	96906	BULK	
MS35490-11	96906	BULK	
MS35490-18	96906	BULK	
MS35490-2	96906	BULK	
MS35490-30	96906	BULK	
MS35490-39	96906	KITS	
MS35490-6	96906	178	112
MS35490-7	96906	BULK	
MS35492-56	96906	MSUP	
MS35522-4	96906	MSUP	
MS35542-1	96906	MSUP	
MS35542-4	96906	MSUP	
MS35542-7	96906	MSUP	
MS35542-8	96906	MSUP	
MS35550-10	96906	MSUP	
MS35550-7	96906	MSUP	
MS35625-1	96906	MSUP	
MS35626-2	96906	MSUP	
MS35637-1	96906	BULK	
MS35649-202	96906	193	52
MS35649-222	96906	194	10
MS35649-222	96906	194	45
MS35649-222			

REFERENCE NUMBER	MFG CODE	FIG NUMBER	ITEM NUMBER
MS35649-242	96906	157	87
MS35649-242	96906	193	54
MS35649-242	96906	193	80
MS35649-242	96906	193	85
MS35649-242	96906	194	14
MS35649-242	96906	194	21
MS35649-242	96906	194	25
MS35649-242	96906	194	30
MS35649-242	96906	194	34
MS35649-242	96906	194	70
MS35649-242	96906	197	11
MS35649-242	96906	197	57
MS35649-242	96906	197	65
MS35649-242	96906	205	28A
MS35649-242	96906	BULK	
MS35649-242	96906	KITS	
MS35649-244	96906	268	204A
MS35649-262	96906	190	37
MS35649-262	96906	193	40
MS35649-262	96906	194	19
MS35649-262	96906	194	38
MS35649-262	96906	226	36
MS35649-262	96906	182A	39
MS35649-262	96906	189A	27
MS35649-262	96906	190	28
MS35649-265	96906	QC1	
MS35649-286	96906	BULK	
MS35649-286	96906	191	14
MS35650-302	96906	195	11
MS35650-302	96906	213	
MS35650-302	96906	275	
MS35650-304	96906	204	6
MS35650-305	96906	167	18
MS35650-322	96906	207	
MS35650-3255	96906	193	69
MS35650-3315T	96906	196	
MS35650-3384	96906	247	10
MS35650-364	96906	89	122
MS35671-16	96906	89	33A
MS35671-16	96906	76	141
MS35671-22	96906	76	142E
MS35671-22	96906	83	203
MS35671-22	96906	88	31
MS35671-22	96906	91	14
MS35671-22	96906	63	86
MS35671-6	96906	267	44
MS35671-6	96906	MSUP	
MS35727-21	96906	190	
MS35756-1	96906	78	12
MS35756-10	96906	78	18
MS35756-3	96906	78	23
MS35756-3	96906	78	31
MS35756-3	96906	78	36
MS35756-3	96906	78	41
MS35756-3	96906	265	262
MS35756-3	96906	268	187A
MS35756-3		KITS	
MS35756-6	96906	82	21
MS35756-6	96906	252	4
MS35756-6	96906	76	19
MS35769-11	96906	81	27
MS35769-11	96906	83	126
MS35769-11	96906	262	38
MS35769-8	96906	193	6A
MS35790-109	96906	MSUP	
MS36031-2	96906	MSUP	
MS36037-3	96906	MSUP	
MS36043-3	96906	MSUP	
MS36047-5	96906	MSUP	
MS36053-6	96906	MSUP	
MS36116-2	96906	MSUP	
MS36117-8			

REFERENCE NUMBER	MFG CODE	FIG NUMBER	ITEM NUMBER
MS37207-226	96906	178	67
MS39086-242	96906	BULK	
MS39100-1	96906	16	49
MS39100-1	96906	19	8
MS45901-4	96906	BULK	
MS4694S54	96906	211	46
MS51023-2	96906	165	49
MS51850-43	96906	36A	23
MS51850-43	96906	36B	26
MS51850-43	96906	37B	40
MS51957-13	96906	BULK	
MS51957-14	96906	248	5
MS51957-14	96906	248	78
MS51957-15	96906	176	26
MS51957-15	96906	177	26
MS51957-15	96906	248	6
MS51957-15	96906	248	90
MS51957-16	96906	BULK	
MS51957-28	96906	BULK	
MS51957-30	96906	183	5
MS51957-30	96906	197	37
MS51957-33	96906	BULK	
MS51957-34	96906	228	147
MS51957-4	96906	176	7
MS51957-4	96906	177	6
MS51957-45	96906	275	
MS51957-45	96906	BULK	
MS51957-54	96906	268	
MS51958-26	96906	KITS	
MS51958-61	96906	BULK	
MS51958-61	96906	KITS	
MS51958-62	96906	13	93
MS51958-62	96906	KITS	
MS51958-64	96906	188	65A
MS51958-64	96906	KITS	
MS51958-65	96906	BULK	
MS51958-65	96906	KITS	
MS51958-66	96906	BULK	
MS51958-66	96906	KITS	
MS51958-67	96906	BULK	
MS51958-71	96906	BULK	
MS51958-80	96906	BULK	
MS51959-18	96906	192	109
MS51959-45	96906	286	11
MS51959-46	96906	286	4
MS51959-47	96906	BULK	
MS51959-51	96906	284	14
MS51959-51	96906	285	13
MS51959-51	96906	287	7
MS51959-52	96906	284	42
MS51959-52	96906	285	43
MS51959-52	96906	286	17
MS51959-54	96906	287	7
MS51959-54	96906	BULK	
MS51959-8	96906	184	41
MS51960-65	96906	BULK	
MS51963-10	96906	190	129
MS51963-10	96906	190	143
MS51963-21	96906	190	75
MS51963-21	96906	197	29
MS51963-21	96906	203	1
MS51963-22	96906	215	54C
MS51963-35	96906	BULK	
MS51963-9	96906	133	22
MS51963-9	96906	197	35
MS51964-48	96906	210	103
MS51964-50	96906	205	39
MS51964-72	96906	20	
MS51973-31	96906	184	
MS51976-46	96906	BULK	
MS63040-3	96906	34	
MS63040-3	96906	62	10
MS63040-3	96906	QC1	21C
MS63040-3	96906	255	22
MS63040-3	96906	263	27B
MS63040-3	96906	219A	175
MS63040-3	96906	219A	70
MS75009-35	96906	188	
MS75009-35	96906	188	49
MS77068-1	96906	248	89
MS8000E166B	96906	217	1
MS8000E166B	96906	217A	1
MS8000E166B	96906	217B	1
MS8001E103C	96906	117	6
MS8001E105A	96906	116	25
MS8001E114C	96906	129	85
MS8001E115B	96906	112	130
MS8001E116B	96906	112	142
MS8001E122C	96906	112	150
MS8001E125C	96906	112	146
MS8001E130C	96906	112	164
MS8001E134A	96906	110	11
MS8001E134A	96906	110	8
MS8001E134A	96906	117	12
MS8001E142A	96906	112	152
MS8001E143C	96906	112	168
MS8001E147C	96906	112	154
MS8001E150A	96906	119	186
MS8001E150B	96906	112	160
MS8001E152C	96906	112	138
MS8001E154A	96906	110	10
MS8001E160C	96906	129	85
MS8001E161A	96906	112	124
MS8001E164A	96906	110	3
MS8001E170C	96906	112	134
MS8001E172A	96906	117	95E
MS8001E180A	96906	110	2
MS8001E192A	96906	110	5
MS8001E194A	96906	110	1
MS8001E194A	96906	129	84
MS8001E200A	96906	110	6
MS8001E200A	96906	119	55
MS8001E200A	96906	129	
MS8001E204A	96906	110	4
MS8001E210C	96906	129	81
MS8001E224B	96906	129	82
MS8001E272C	96906	119	194
MS8001E284A	96906	112	7
MS8001E324C	96906	119	174
MS8001E354E105	96906	129	20
MS8001E374C	96906	117	2
MS8001E480C	96906	143	36
MS8001E577B	96906	115	48
MS8001E600B	96906	115	44
MS8001G116C	96906	139	71
MS8001G124A	96906	116	11
MS8001G124A	96906	116	12
MS8001G124A	96906	116	9
MS8001G133C	96906	139	22
MS8001G146C	96906	109	19
MS8001G162C	96906	129	68
MS8001G166A	96906	129	110
MS8001G166C	96906	109	51
MS8001G190A	96906	116	30
MS8001G216A	96906	117	95
MS8001G466B	96906	143	35
MS8001G490A	96906	143	35
MS8001G600A	96906	143	19
MS8001H156G	96906	139	75
MS8001H164N	96906	139	24
MS8001H170J	96906	109	17
MS8001H174J	96906	109	47

REFERENCE NUMBER	MFG CODE	FIG NUMBER	ITEM NUMBER
MS8001J132G	96906	139	84
MS8001J144H	96906	139	87
MS8001J172G	96906	139	36
MS8001J192J	96906	139	80
MS8001J224H	96906	139	39
MS8001J445H	96906	143	6
MS8001J480G	96906	143	6
MS8001K246J	96906	129	73
MS8001M076N180	96906	129	17A
MS8001M110J	96906	129	20A
MS8001M134J	96906	117	73G
MS8001M206K180	96906	129	65
MS8001M224N180	96906	129	109
MS8001M414H	96906	129	79
MS87018-10	96906	BULK	
MS87018-16	96906	BULK	
MS87018-4	96906	BULK	
MS87018-6	96906	BULK	
MS87018-8	96906	BULK	
MS87019-10	96906	BULK	
MS87019-4	96906	BULK	
MS87019-6	96906	BULK	
MS87020-10	96906	BULK	
MS87020-16	96906	BULK	
MS87020-4	96906	BULK	
MS87020-6	96906	BULK	
MS87020-8	96906	BULK	
MS87021-12	96906	BULK	
MS87021-16	96906	BULK	
MS87021-20	96906	BULK	
MS87021-4	96906	BULK	
MS87021-8	96906	BULK	
MS87022-12	96906	BULK	
MS87022-16	96906	BULK	
MS87022-20	96906	BULK	
MS87023-12	96906	BULK	
MS87023-20	96906	BULK	
MS87023-4	96906	BULK	
MS87027-10	96906	BULK	
MS87027-12	96906	BULK	
MS87027-16	96906	BULK	
MS87027-20	96906	BULK	
MS87027-4	96906	BULK	
MS87027-6	96906	BULK	
MS87027-8	96906	BULK	
MS87027E0100E270	96906	QC1	60
MS87027E0100E270	96906	217	11
MS87027E0100E270	96906	217A	9
MS87027E0100E270	96906	217B	12
MS87028E0052F180	96906	217B	31
MS87028E0054F035	96906	217B	32
MS87028E0077A	96906	217	12
MS87028E0077A	96906	217B	13
MS87028E0077A	96906	217A	10
MS87028E0100A	96906	217B	29
MS87028E0150A	96906	217B	1
MS87028E0240C	96906	217	14
MS87028E0240C	96906	217A	17
MS87028E0246E330	96906	62	73
MS87028E0246E330	96906	217B	19
MS87028E0326F045	96906	217	2
MS87028E0340B	96906	217B	26
MS87028E240C	96906	QC1	139
MS87028E240C	96906	62	73
MS87028G0175C	96906	213	50
MS87028H0060A	96906	QC1	56
MS87028H0060A	96906	217	9
MS87028H0160A	96906	217B	4
MS87028H0180A	96906	217A	2
MS87028H0440A	96906	QC1	57
MS87028H0440A	96906	217	10
MS87028H090A	96906	QC1	54
MS87028H090A	96906	217	7
MS87028J0580E	96906	217A	4
MS87028M0280C	96906	62	62
MS87028M0280C	96906	217	15
MS87028M0280C	96906	217A	20
MS87028M0310C	96906	217B	21
MS87029E0080C	96906	95	60
MS87029E0116C	96906	95	9
MS87029E0144F270	96906	95	156
MS87029E0165A	96906	95	174
MS87029E0200C	96906	95	59
MS87029E0243C	96906	95	145
MS87029G0272E000	96906	81	7
MS87029H0224A	96906	95	166
MS87029H0234A	96906	95	170
MS87029H0344A	96906	95	173
MS87029K0160A	96906	95	46
MS87029K0174A	96906	95	46
MS87029K0294A	96906	95	53
MS87029K0304A	96906	95	101
MS87029K0316A	96906	95	102
MS87029K0575C	96906	95	112
MS87029K0614C	96906	95	113
MS87029M0214B	96906	95	103
MS87029M0630B	96906	95	111
MS87029N0176A	96906	95	38
MS87029N0250A	96906	95	37
MS87029N0404C	96906	95	3
MS87029N0410A	96906	95	3
MS87029N0450E090	96906	95	127
MS87029N0472E270	96906	95	126
MS87029N0606B	96906	95	1
MS87029N0664A	96906	95	1
MS87029N0696A	96906	95	142
MS87033B1	96906	BULK	
MS87033D1	96906	BULK	
MS87033F2	96906	BULK	
MS87033F4	96906	BULK	
MS87033F8	96906	BULK	
MS87033G38	96906	BULK	
MS87033G39	96906	BULK	
MS87033G54	96906	BULK	
MS87033G55	96906	BULK	
MS87033H2	96906	BULK	
MS87033H5	96906	BULK	
MS87033J4	96906	BULK	
MS87033J5	96906	BULK	
MS87033L9	96906	BULK	
MS9014-06		231	47
MS9014-06		KITS	
MS9015-04		KITS	
MS9015-04	96906	262	52
MS9020-08	96906	BULK	
MS9021-015	96906	216	66
MS9021-016	96906	BULK	
MS9021-019		KITS	
MS9021-019	96906	KITS	
MS9021-020		KITS	
MS9021-021		KITS	
MS9021-027	96906	216	69
MS9021-031	96906	148	16
MS9021-036	96906	BULK	
MS9021-039	96906	BULK	
MS9021-042	96906	BULK	
MS9021-113	96906	BULK	
MS90298-1	96906	204	32
MS90298-1	96906	204	33
MS90298-2	96906	204	32
MS90298-2	96906	204	33
MS90362	96906	204	23

REFERENCE NUMBER	MFG CODE	FIG NUMBER	ITEM NUMBER
MS9058-06	96906	KITS	
MS9058-08	96906	BULK	
MS9068-035		KITS	
MS9068-035	96906	49	53
MS9068-253		KITS	
MS9068-253	96906	49	9
MS9068-253	96906	KITS	
MS90707-25	96906	230	91
MS9088-05	96906	134	1
MS9088-05	96906	134	52
MS9088-07	96906	134	13
MS9088-10	96906	BULK	
MS9088-11	96906	134	43
MS9088-22	96906	134	42
MS9088-28	96906	BULK	
MS9089-07	96906	BULK	
MS9089-09	96906	134	40
MS9089-12	96906	BULK	
MS9089-14	96906	BULK	
MS9089-16	96906	134	39
MS9091-13	96906	BULK	
MS9101-06	96906	BULK	
MS9102-40	96906	BULK	
MS9134-01	96906	62	58
MS9134-01	96906	QC1	33
MS9134-01	96906	273	18
MS9134-01	96906	KITS	
MS9136-01	96906	62	
MS9136-01	96906	138	57
MS9136-01	96906	273	15
MS9136-01	96906	KITS	
MS9147-12	96906	BULK	
MS9147-26	96906	BULK	
MS9147-27	96906	BULK	
MS9147-28	96906	BULK	
MS9147-36	96906	BULK	
MS91528-1P2B	96906	189	14
MS91528-5F2B	96906	184	59
MS9201-07	96906	BULK	
MS9226-04	96906	BULK	
MS9226-05	96906	BULK	
MS9243-01	96906	83	
MS9244-01		KITS	
MS9244-01	96906	BULK	
MS9245-23	96906	18	
MS9245-23	96906	20	104
MS9320-10	96906	BULK	
MS9388-008	96906	67	26
MS9388-012	96906	76	144D
MS9388-015	96906	149	57
MS9388-015	96906	267	39
MS9388-019	96906	183A	4
MS9388-024	96906	149	15
MS9388-028	96906	67	61
MS9388-112	96906	67	56
MS9388-127	96906	274	56
MS9388-127	96906	149	8
MS9388-137	96906	67	66
MS9388-143	96906	71	54
MS9388-234	96906	67	24
MS9388-237	96906	149	43
MS9388-258	96906	71	21F
MS9388-264	96906	71	4
MS9388-264	96906	89	50
MS9390-54	96906	83	191
MS9484-04	96906	143	27
MS9484-06	96906	139	111
MS9484-06	96906	139	99
MS9484-10	96906	143	8
MS9484-16	96906	129	18A
MT385	70436	100	7
MV7344	82768	202	37
MOLITHNO2MOLY	73219	MSUP	
MOLYKOTETYPEZ	94499	MSUP	
M1LR26RW20V150	81349	196	35
M18312-2-0495	81349	165	65
M2021	12511	190A	18
M20392-5C21	96906	BULK	
M2603	12511	190A	
M2916	12511	190A	14
M39003-01-2057	81349	204A	25
M39003-01-2244	81349	169	42
M39003-01-2244	81349	173	41
M39003-01-2257	81349	192	
M39003-01-2257	81349	192	56
M39003-01-2303	81349	204A	53
M39003-01-2314	81349	173	33
M39003-01-2344	81349	173	14
M39003-01-2368	81349	192	34
M39003-01-2373	81349	204A	41
M39003-01-2845	81349	194	81
M39003-01-2977	81349	192	
M39003-01-2977	81349	192	56
M39003-01-3003	81349	189A	46
M39003-01-3009	81349	192	38
M39003-01-3024	81349	194	108
M39003-01-3024	81349	194	112
M39003-01-3024	81349	194	147
M39003-01-3024	81349	204A	36
M39003-01-3026	81349	189	34
M39003-01-3073	81349	194	87
M39006-01-3071	81349	192	42
M39006-09-6315	81349	169	20
M39006-09-6315	81349	169	38
M39006-09-6315	81349	173	37
M39012-06-0002	81349	BULK	
M39012-15-0002	81349	BULK	
M39012-16-0001	81349	BULK	
M39014-01-1339	81349	189A	70
M39014-01-1351	81349	189	21
M39014-01-1351	81349	189A	109
M39014-01-1351	81349	189A	56
M39014-02-1345	81349	194	184
M39015-1-006PM	81349	194	78
M39022-01-1671	81349	30	43
M4023	12511	190A	16
M667181C	18965	135	
M74CRB348-2E	02615	248	24
M9134-3MBRE7845	21335	91	20
M9134-4MBRE8771	21335	91	20
NASDD5-48	80205	28	
NAS102IN3	80205	281	
NAS1027A06	80205	BULK	
NAS1031A04	80205	BULK	
NAS1031A06	80205	196	26
NAS1031A06	80205	204	1E
NAS1031A08	80205	BULK	
NAS1031A3	80205	10	
NAS1031A3	80205	13	32
NAS1031A3	80205	13	62
NAS1031A3	80205	13	83
NAS1031A3	80205	13	97
NAS1031A3	80205	14	30
NAS1031A3	80205	14	46
NAS1031A3	80205	17	
NAS1031A3	80205	17	
NAS1031A3	80205	17	17
NAS1031A3	80205	17	27
NAS1031A3	80205	32	
NAS1031A3	80205	32	80
NAS1031A3	80205	33	
NAS1031A3	80205	69	27

REFERENCE NUMBER	MFG CODE	FIG NUMBER	ITEM NUMBER
NAS1031A3	80205	95	94B
NAS1031A3	80205	11B	
NAS1031A3	80205	251	46A
NAS1031A3	80205	270	28B
NAS1031A3	80205	279	
NAS1031A3	80205	287	11
NAS1031A3	80205	42A	
NAS1031A3	80205	42B	
NAS1031A3	80205	42C	
NAS1031A3	80205	KITS	
NAS1031A6	80205	BULK	
NAS1031C08	80205	BULK	
NAS1031C3	80205	BULK	
NAS1031C4	80205	BULK	
NAS1031N8	80205	BULK	
NAS10310A3	80205	228	
NAS1032A06	80205	BULK	
NAS1032A08	80205	BULK	
NAS1032A3	80205	286	26
NAS1032A3	80205	37A	104
NAS1032A4	80205	17	
NAS1032A4	80205	91	8C
NAS1032A4	80205	229	29
NAS1032A5	80205	BULK	
NAS1032C08	80205	BULK	
NAS1068A06	80205	BULK	
NAS1080-10	80205	BULK	
NAS1080-12	80205	BULK	
NAS1080-5	80205	92	38
NAS1080-5	80205	92	52
NAS1080-5	80205	92	92
NAS1080-6	80205	11	124
NAS1080-6	80205	31	
NAS1080-6	80205	32	
NAS1080-6	80205	42A	
NAS1080-6	80205	42C	
NAS1080-6	80205	BULK	
NAS1080-8	80205	BULK	
NAS1080C6	80205	BULK	
NAS1080D5	80205	BULK	
NAS1080E6	80205	BULK	
NAS1080P10	80205	BULK	
NAS1080P12	80205	BULK	
NAS1080R5	80205	BULK	
NAS1080R6	80205	70	38
NAS1080R6	80205	BULK	
NAS1080R8	80205	BULK	
NAS1081-06A7L	80205	BULK	
NAS1081-08B6	80205	184	
NAS1081C04D3N	80205	128	2
NAS1081C3A16	80205	270	37
NAS1090-1	80205	BULK	
NAS1097AD3-3	80205	BULK	
NAS1097AD3-4	80205	BULK	
NAS1097AD3-5	80205	BULK	
NAS1097AD3-6	80205	BULK	
NAS1097AD4-4	80205	BULK	
NAS1097AD4-5	80205	BULK	
NAS1097AD4-6	80205	BULK	
NAS1097AD4-8	80205	BULK	
NAS1097AD5-10	80205	BULK	
NAS1097AD5-5	80205	BULK	
NAS1097DD6-8	80205	BULK	
NAS1132C3	80205	BULK	
NAS1132C4	80205	BULK	
NAS1132C5	80205	BULK	
NAS1132C6	80205	284	15
NAS1133C13	80205	284	12
NAS1133C13	80205	BULK	
NAS1133C14	80205	287	4
NAS1133C15	80205	284	12
NAS1133C16	80205	284	45

REFERENCE NUMBER	MFG CODE	FIG NUMBER	ITEM NUMBER
NAS1133C16	80205	287	1
NAS1133C24	80205	287	3
NAS1133C28	80205	BULK	
NAS1169-10L	80205	13	97
NAS1169-10L	80205	14	25
NAS1169-10L	80205	14	31
NAS1169-10L	80205	14	36
NAS1169-10L	80205	14	45
NAS1169-10L	80205	14	47
NAS1169-10L	80205	14	50
NAS1169-10L	80205	20	74
NAS1169DD10	80205	20	17
NAS1169DD10L	80205	20	4
NAS1172-11L	80205	BULK	
NAS1173-11L	80205	287	14
NAS1173-12L	80205	286	10
NAS1173-13L	80205	BULK	
NAS1173-15L	80205	286	8
NAS1173-3L	80205	BULK	
NAS1173-4	80205	286	12
NAS1173-6	80205	286	14
NAS1173-7L	80205	287	12
NAS1173-9L	80205	BULK	
NAS1189-08P7L	80205	102	30A
NAS1189-3P10L	80205	28	
NAS1189-3P10L	80205	28	
NAS1189-3P12	80205	28	
NAS1189-3P14	80205	BULK	
NAS1189-3P16	80205	BULK	
NAS1189-3P7	80205	18	
NAS1189C04P3	80205	228	
NAS1189C06P5L	80205	228	149
NAS1189C3P10N	80205	BULK	
NAS1189C3P12L	80205	70	1
NAS1189C3P12L	80205	KITS	
NAS1190-045PL	80205	248	
NAS1190-06P5L	80205	248	10
NAS1190-08P5L	80205	248	17
NAS1190-3P7L	80205	BULK	
NAS1190C06P4	80205	228	
NAS1191-3P10	80205	14	24
NAS1191-3P10N	80205	14	24
NAS1191C04P8L	80205	BULK	
NAS1191C08P8N	80205	75	32A
NAS1191C3P10N	80205	KITS	
NAS1191C3P4	80205	119	355
NAS1191C3P4	80205	BULK	
NAS1191C4P6L	80205	270	24
NAS1193-6C	80205	224	3
NAS121B125	80205	37A	20
NAS121B125	80205	37A	74
NAS121B125	80205	37A	9
NAS1222-08E	80205	267	25
NAS1222-08E	80205	267	45
NAS1223-7	80205	BULK	
NAS1223C6L	80205	270	33
NAS1224-15L	80205	BULK	
NAS1224-8L	80205	BULK	
NAS1224C1L	80205	270	54
NAS1224C3L	80205	270	12
NAS1224C6L	80205	270	13
NAS1224C8L	80205	270	36
NAS1224C8L	80205	270	39
NAS1224C9L	80205	270	50
NAS1236A64	80205	72	92
NAS1236A64	80205	74	3
NAS1242D6-10	80205	BULK	
NAS1242D6-12	80205	BULK	
NAS1291-4	80205	287	19
NAS1291C02M	80205	204A	158

REFERENCE NUMBER	MFG CODE	FIG NUMBER	ITEM NUMBER
NAS1291C02M	80205	204A	169
NAS1291C04M	80205	183A	17
NAS1291C04M	80205	204A	119
NAS1291C06M	80205	183A	26
NAS1291C06M	80205	204A	122
NAS1291C06M	80205	204A	129
NAS1291C3	80205	KITS	
NAS1291C3M	80205	183A	15
NAS1291C3M	80205	183A	7
NAS1291X3	80205	285	50
NAS1291X3	80205	285	7
NAS1291X5	80205	284	21
NAS1291X5	80205	285	21
NAS1297-3D15	80205	71	121
NAS1297-3D15	80205	KITS	
NAS1297-3D25	80205	71	122
NAS1297-3D25	80205	KITS	
NAS1304-15	80205	118	7
NAS1304-15	80205	BULK	
NAS1304-8H	80205	81	16
NAS1304-8H	80205	91	5
NAS1305-13	80205	118	9
NAS1305-15	80205	118	8
NAS1305-17	80205	118	12C
NAS1305-25W	80205	22	32
NAS1305-85D	80205	BULK	
NAS1306-12	80205	11	84D
NAS1306-29DW	80205	KITS	
NAS1306-36DW	80205	KITS	
NAS1306-43DW	80205	KITS	
NAS1306-44	80205	11	95
NAS1308-36DHW	80205	BULK	
NAS1308-91DW	80205	BULK	
NAS1314-48	80205	269	6B
NAS1314-50	80205	269	6B
NAS1314-50	80205	KITS	
NAS1329S3KB80	80205	BULK	
NAS1329S3K180	80205	20	
NAS1330A08K106	80205	BULK	
NAS1330A3KB116	80205	BULK	
NAS1330A3KB166	80205	BULK	
NAS1330A3KB216	80205	28	
NAS1330A3K116	80205	BULK	
NAS1330S3K116	80205	20	
NAS1330S3K216	80205	BULK	
NAS1333A3C06	80205	33	17
NAS1333A3C17	80205	21	22
NAS1334A2C04	80205	28	24A
NAS1334A2C14	80205	F19	4
NAS1334A2C14	80205	F19	4
NAS1334A3C05	80205	21	
NAS1334A3C14	80205	36	
NAS1334A3C14	80205	36	2
NAS1334A3C15	80205	34	
NAS1335A3C05	80205	KITS	
NAS1335A3C09	80254	F20	17
NAS1338A2C20	80205	62	6
NAS1338A2C64	80205	F18	20B
NAS1338A3C67	80205	F17	1A
NAS1340A3C07	80205	F15	56
NAS1343A2C67	80205	F18	20A
NAS1343A2C74	80205	F14	
NAS1343A3-66	80205	F20	30
NAS1351-3-14	80205	112	
NAS1351-3H10		KITS	
NAS1351-3H10	80205	51	77
NAS1351-3LN28P	80205	67	53
NAS1351C3H10	80205	BULK	
NAS1352-06H6P	80205	141	5
NAS1352-06H6P	80205	141	8
NAS1352C04H4	80205	45	31D
NAS1352C06H8	80205	BULK	
NAS1354DS7S14D	80205	36	
NAS1354DS7S14D	80205	36	
NAS1354DS7S5D	80205	BULK	
NAS1355DS7S05D	80205	KITS	
NAS1355DS7S05D	80205	31	24
NAS1356DS7S25D	80205	BULK	
NAS1356DS7S27D	80205	BULK	
NAS1358DS7S07D	80205	BULK	
NAS1358DS7S08D	80205	BULK	
NAS1358DS7S20D	80205	BULK	
NAS1360DS7S07D	80205	BULK	
NAS1374A07CB104	80205	253	25
NAS1374A07CB176	80205	253	30A
NAS1374A07CB188	80205	253	30B
NAS1375A04SE014	80205	QC1	8
NAS1375A04SE014	80205	249	22
NAS1375A06SE024	80205	62	31
NAS1375A12SB060	80205	196	4
NAS1376A04SH019	80205	QC1	7
NAS1376A04SH019	80205	249	17
NAS1376A06SE071	80205	62	31
NAS1376A06SE071	80205	QC1	24
NAS1394-3	80205	49	54A
NAS1394C3	80205	49	21A
NAS1394C3	80205	BULK	
NAS1395-3L	80205	BULK	
NAS1395-4L	80205	BULK	
NAS1395C4L	80205	BULK	
NAS1395C4L	80205	219A	38
NAS1395C5	80205	BULK	
NAS1397P2B	80205	192	
NAS1397P3	80205	192	50
NAS1397P3	80205	192	68
NAS1397P3	80205	193	44C
NAS1397P4N	80204	192	47
NAS1398B4-4	80205	BULK	
NAS1398B5-2	80205	BULK	
NAS1398B5-4	80205	BULK	
NAS1398D6-10	80205	18	
NAS1398D6-10	80205	BULK	
NAS1398M5-6	80205	BULK	
NAS1399MW5-4	80205	BULK	
NAS1402-6	80205	285	18
NAS1403-12	80205	285	54
NAS1403-13	80205	285	10
NAS1403-15	80205	285	9
NAS1403-16	80205	285	38
NAS1436-5	80205	BULK	
NAS1436-8	80205	BULK	
NAS144DH2D	80205	287	28
NAS144DH23	80205	287	21
NAS1446-7	80205	BULK	
NAS145A73	80205	248	40
NAS1455B00-6	80205	BULK	
NAS1456-10	80205	BULK	
NAS1456-13	80205	BULK	
NAS1456-14	80205	BULK	
NAS1456-15	80205	31	
NAS1456-3	80205	BULK	
NAS1456-4	80205	BULK	
NAS1456-5	80205	42A	
NAS1456-5	80205	42C	
NAS1456-5	80205	BULK	
NAS1456-6	80205	BULK	
NAS1456-7	80205	BULK	
NAS1456-8	80205	BULK	
NAS1458-17	80205	BULK	
NAS1458-6	80205	BULK	
NAS1458-7	80205	BULK	
NAS1458-8	80205	BULK	

REFERENCE NUMBER	MFG CODE	FIG NUMBER	ITEM NUMBER
NAS1460-8	80205	BULK	
NAS1465-1	80205	BULK	
NAS1465-10	80205	BULK	
NAS1465-2	80205	BULK	
NAS1465-3	80205	BULK	
NAS1465-4	80205	BULK	
NAS1465-5	80205	92	37B
NAS1465-5	80205	92	51B
NAS1465-5	80205	92	91B
NAS1465-5	80205	BULK	
NAS1465-6	80205	BULK	
NAS1465-7	80205	BULK	
NAS1465-8	80205	BULK	
NAS1465-9	80205	BULK	
NAS1466-1	80205	BULK	
NAS1466-10	80205	BULK	
NAS1466-11	80205	BULK	
NAS1466-12	80205	BULK	
NAS1466-13	80205	BULK	
NAS1466-14	80205	BULK	
NAS1466-15	80205	BULK	
NAS1466-16	80205	BULK	
NAS1466-17	80205	BULK	
NAS1466-18	80205	BULK	
NAS1466-2	80205	BULK	
NAS1466-20	80205	BULK	
NAS1466-29	80205	BULK	
NAS1466-3	80205	BULK	
NAS1466-4	80205	BULK	
NAS1466-5	80205	11	125
NAS1466-5	80205	70	39
NAS1466-5	80205	BULK	
NAS1466-6	80205	BULK	
NAS1466-7	80205	BULK	
NAS1466-8	80205	BULK	
NAS1466-9	80205	BULK	
NAS1468-10	80205	BULK	
NAS1468-11	80205	BULK	
NAS1468-12	80205	BULK	
NAS1468-13	80205	BULK	
NAS1468-14	80205	BULK	
NAS1468-16	80205	BULK	
NAS1468-17	80205	BULK	
NAS1468-18	80205	BULK	
NAS1468-19	80205	BULK	
NAS1468-2	80205	BULK	
NAS1468-20	80205	BULK	
NAS1468-21	80205	BULK	
NAS1468-3	80205	BULK	
NAS1468-30	80205	BULK	
NAS1468-4	80205	BULK	
NAS1468-5	80205	BULK	
NAS1468-6	80205	BULK	
NAS1468-7	80205	BULK	
NAS1468-8	80205	BULK	
NAS1468-9	80205	BULK	
NAS1470-10	80205	BULK	
NAS1470-11	80205	BULK	
NAS1470-12	80205	BULK	
NAS1470-13	80205	BULK	
NAS1470-14	80205	BULK	
NAS1470-15	80205	BULK	
NAS1470-16	80205	BULK	
NAS1470-17	80205	BULK	
NAS1470-18	80205	BULK	
NAS1470-19	80205	BULK	
NAS1470-2	80205	BULK	
NAS1470-20	80205	BULK	
NAS1470-3	80205	BULK	
NAS1470-4	80205	BULK	
NAS1470-5	80205	BULK	
NAS1470-6	80205	BULK	
NAS1470-7	80205	BULK	
NAS1470-8	80205	BULK	
NAS1470-9	80205	BULK	
NAS1472-10	80205	BULK	
NAS1472-11	80205	BULK	
NAS1472-12	80205	BULK	
NAS1472-15	80205	BULK	
NAS1472-16	80205	BULK	
NAS1472-17	80205	BULK	
NAS1472-18	80205	BULK	
NAS1472-19	80205	BULK	
NAS1472-2	80205	BULK	
NAS1472-20	80205	BULK	
NAS1472-4	80205	BULK	
NAS1472-5	80205	BULK	
NAS1472-6	80205	BULK	
NAS1472-7	80205	BULK	
NAS1472-8	80205	BULK	
NAS1472-9	80205	BULK	
NAS1473A08	80205	BULK	
NAS1473A3	80205	BULK	
NAS1475-3	80205	BULK	
NAS1475-4	80205	BULK	
NAS1475-6	80205	BULK	
NAS1496-12	80205	BULK	
NAS1496-3	80205	BULK	
NAS1496-4	80205	BULK	
NAS1496-6	80205	BULK	
NAS15-8A	80205	BULK	
NAS152ADH50	80205	BULK	
NAS1525-15	80205	BULK	
NAS1525-2	80205	BULK	
NAS1525-3	80205	BULK	
NAS1525-4	80205	BULK	
NAS1525-6	80205	BULK	
NAS1525-8	80205	BULK	
NAS1525-9	80205	BULK	
NAS1535-3	80205	BULK	
NAS1535-4	80205	BULK	
NAS1535-5	80205	BULK	
NAS1593-005	80205	149	82
NAS1593-014	80205	149	60
NAS1593-017	80205	149	92
NAS1593-019	80205	183A	4
NAS1593-135	80205	149	10
NAS1593-140	80205	149	84
NAS1593-240	80205	149	22
NAS1595-32	80205	95	15C
NAS1595-8	80205	KITS	
NAS1598-4Y	80205	11A	87
NAS1598-6Y	80205	49	48
NAS1598-6Y	80205	49	57
NAS1598-7Y	80205	49	50B
NAS1635-02-16	80205	268	136
NAS1669-3L6	81205	BULK	
NAS1676C2	80205	165	69
NAS1676C2	80205	165	72
NAS1676C2	80205	165	77
NAS173984-2	80205	BULK	
NAS173984-3	80205	BULK	
NAS173985-3	80205	BULK	
NAS221-24	80205	281	
NAS221-6	80205	13	97
NAS221-6	80205	281	
NAS221-6	80205	282	2
NAS221-6	80205	282	21
NAS221-6	80205	282	6
NAS221-9	80205	24	12
NAS221-9	80205	24	14
NAS221-9	80205	24	16

REFERENCE NUMBER	MFG CODE	FIG NUMBER	ITEM NUMBER
NAS221-9	80205	24	20
NAS221-9	80205	271	20
NAS221-9	80205	KITS	
NAS221C10	80205	18	42A
NAS221C10	80205	18	45A
NAS221C10	80205	KITS	
NAS221C19	80205	18	
NAS221C30	80205	31	19
NAS221C30	80205	31	20A
NAS221C30	80205	KITS	
NAS221C8	80205	31	
NAS221C8	80205	KITS	
NAS221C9	80205	31	
NAS221DD11	80205	KITS	
NAS222-11	80205	18	66
NAS222-11	80205	KITS	
NAS222-16	80205	BULK	
NAS222C11	80205	18	112
NAS222C11	80205	18	62
NAS222DD11	80205	13	11
NAS222DD11	80205	13	92
NAS222DD12	80205	13	65
NAS222DD12	80205	13	92
NAS223-29	80205	271	22
NAS223-30	80205	271	21
NAS303-22-0201	80205	BULK	
NAS304-22-0163	80205	31	2
NAS304-22-0190	80205	31	1
NAS304-22-0327	80205	32	58
NAS304-22-0327	80205	KITS	
NAS304-22-0613	80205	31	
NAS306-22-0167	80205	31	
NAS306-22-0184	80205	31	
NAS333CPA10	80205	11	61C
NAS333CPA10	80205	BULK	
NAS333CPA5	80205	11	61C
NAS333CPA5	80205	BULK	
NAS333CPA6	80205	11	61C
NAS333CPA6	80205	42B	
NAS333CPA7	80205	11	61C
NAS333CPA7	80205	BULK	
NAS334CPA14	80205	BULK	
NAS344-53	80205	BULK	
NAS345-134	80205	BULK	
NAS395-17-3	80205	BULK	
NAS397-10	80205	42	
NAS397-10	80205	42	6A
NAS397-12	80205	BULK	
NAS397-30	80205	253	4
NAS397-30	80205	KITS	
NAS398-108	80205	251	50
NAS398-124	80205	251	8
NAS398-42	80205	253	17
NAS398-42	80205	253	7
NAS398-50	80205	251	26
NAS398-50	80205	251	28
NAS398-58	80205	251	54
NAS398-58	80205	253	20
NAS398-58	80205	253	39
NAS398-70	80205	255	6A
NAS398-72	80205	251	52
NAS398-72	80205	255	8
NAS398-74	80205	251	58
NAS42DD4-10A	80205	BULK	
NAS42DD4-11	80205	37	
NAS42DD4-13	80205	BULK	
NAS42DD4-39A	80205	BULK	
NAS42DD4-6A	80205	BULK	
NAS42DD4-8A	80205	BULK	
NAS42DD5-32	80205	BULK	
NAS42DD5-48	80205	28	
NAS42DD6-10	80205	253	44
NAS42DD6-10	80205	255	4
NAS42DD6-10	80205	256	12
NAS42DD6-50	80205	210	91
NAS42DD6-8	80205	34	
NAS42DD6-8	80205	95	
NAS42DD8-24	80205	253	45
NAS42DD8-24	80205	255	5
NAS42HT5-10	80205	BULK	
NAS42HT8-14	80205	BULK	
NAS42HT8-56	80205	21	15
NAS42HT8-72	80205	BULK	
NAS427K13	80205	BULK	
NAS427K15	80205	F15	32
NAS427K17	80205	BULK	
NAS427K18	80205	F15	31
NAS427K18	80205	F20	8
NAS427K34	80205	F15	45
NAS428-4-10	80205	20	39
NAS428-4-11	80205	21	60
NAS428-4-12	80205	21	60
NAS428-4-13	80205	21	61
NAS428-4-14	80205	21	60
NAS428-4-20	80205	11	45
NAS428-4-22	80205	11	46
NAS428-5-11	80205	21	53
NAS428-5-11	80205	KITS	
NAS428-5-12	80205	21	53
NAS428-5-12	80205	KITS	
NAS428-5-20	80205	11	105
NAS428-5-24	80205	11	51
NAS428-5-30	80205	BULK	
NAS428-5-6	80205	BULK	
NAS428-5-6	80205	KITS	
NAS428-6-16	80205	11	42
NAS428-6-20	80205	15	13
NAS428-6-20	80205	KITS	
NAS428-6-22	80205	11	103
NAS428-6-32	80205	11	93
NAS428H4-12	80205	BULK	
NAS428H6-12	80205	BULK	
NAS428K4-22	80205	11	45
NAS428K4-24	80205	11	46
NAS428K5-20	80205	235	13
NAS428K5-20	80205	KITS	
NAS428K6-20	80205	238	54
NAS428K6-24	80205	238	11
NAS428K6-30	80205	BULK	
NAS43-3-8	80205	62	11
NAS43-3-8	80205	QC1	22
NAS43DD0-28	80205	184	
NAS43DD0-8	80205	BULK	
NAS43DD1-16	80205	BULK	
NAS43DD1-20A	80205	100	13
NAS43DD1-20A	80205	KITS	
NAS43DD1-32	80205	BULK	
NAS43DD1-48	80205	BULK	
NAS43DD1-5	80205	275	
NAS43DD12-78	80205	239	47
NAS43DD12-78	80205	239	81
NAS43DD3-10	80205	BULK	
NAS43DD3-112	80205	BULK	
NAS43DD3-12	80205	221	132
NAS43DD3-12	80205	KITS	
NAS43DD3-128	80205	BULK	
NAS43DD3-13	80205	182	
NAS43DD3-14	80205	109	
NAS43DD3-16	80205	95	40
NAS43DD3-16	80205	95	88
NAS43DD3-16	80205	95	96
NAS43DD3-16	80205	109	

REFERENCE NUMBER	MFG CODE	FIG NUMBER	ITEM NUMBER
NAS43DD3-16	80205	115	
NAS43DD3-16	80205	116	
NAS43DD3-16	80205	117	
NAS43DD3-16	80205	119	
NAS43DD3-16	80205	129	
NAS43DD3-16	80205	139	
NAS43DD3-16	80205	178	116
NAS43DD3-16	80205	221	119
NAS43DD3-16	80205	256	21A
NAS43DD3-16	80205	257	9F
NAS43DD3-16	80205	276	
NAS43DD3-16	80205	KITS	
NAS43DD3-16	80205	217B	2
NAS43DD3-16	80205	217B	9
NAS43DD3-17	80205	32	43
NAS43DD3-17	80205	KITS	
NAS43DD3-18	80205	204	
NAS43DD3-18	80205	218	73E
NAS43DD3-18	80205	255	24
NAS43DD3-18	80205	KITS	
NAS43DD3-2	80205	BULK	
NAS43DD3-20	80205	119	
NAS43DD3-20	80205	198	25
NAS43DD3-22	80205	BULK	
NAS43DD3-24	80205	95	161
NAS43DD3-24	80205	95	85
NAS43DD3-24	80205	95	86
NAS43DD3-24	80205	95	87
NAS43DD3-24	80205	109	
NAS43DD3-24	80205	109	77C
NAS43DD3-24	80205	112	105
NAS43DD3-24	80205	112	113
NAS43DD3-24	80205	112	116
NAS43DD3-24	80205	112	57
NAS43DD3-24	80205	115	
NAS43DD3-24	80205	117	
NAS43DD3-24	80205	119	
NAS43DD3-24	80205	139	
NAS43DD3-24	80205	178	117
NAS43DD3-24	80205	179	34
NAS43DD3-24	80205	BULK	
NAS43DD3-24	80205	KITS	
NAS43DD3-28	80205	109	
NAS43DD3-28	80205	119	
NAS43DD3-28	80205	198	44
NAS43DD3-3	80205	BULK	
NAS43DD3-32	80205	62	
NAS43DD3-32	80205	95	100
NAS43DD3-32	80205	QC1	
NAS43DD3-32	80205	109	
NAS43DD3-32	80205	110	98
NAS43DD3-32	80205	112	10
NAS43DD3-32	80205	112	26
NAS43DD3-32	80205	112	37
NAS43DD3-32	80205	112	5
NAS43DD3-32	80205	112	61
NAS43DD3-32	80205	116	
NAS43DD3-32	80205	117	
NAS43DD3-32	80205	119	
NAS43DD3-32	80205	119	96
NAS43DD3-32	80205	129	
NAS43DD3-32	80205	139	107
NAS43DD3-32	80205	139	114
NAS43DD3-32	80205	143	
NAS43DD3-32	80205	178	118
NAS43DD3-32	80205	178	141
NAS43DD3-32	80205	179	35
NAS43DD3-32	80205	182	
NAS43DD3-32	80205	206	7
NAS43DD3-32	80205	208	
NAS43DD3-32	80205	213	
NAS43DD3-32	80205	257	
NAS43DD3-32	80205	277	
NAS43DD3-32	80205	KITS	
NAS43DD3-32	80205	219A	90
NAS43DD3-36	80205	32	
NAS43DD3-36	80205	110	96
NAS43DD3-36	80205	119	
NAS43DD3-36	80205	129	
NAS43DD3-36	80205	KITS	
NAS43DD3-4	80205	BULK	
NAS43DD3-4	80205	KITS	
NAS43DD3-40	80205	109	
NAS43DD3-40	80205	110	99
NAS43DD3-40	80205	117	
NAS43DD3-40	80205	119	
NAS43DD3-40	80205	129	
NAS43DD3-40	80205	179	36
NAS43DD3-40	80205	277	
NAS43DD3-48	80205	95	161
NAS43DD3-48	80205	115	
NAS43DD3-48	80205	119	
NAS43DD3-48	80205	129	
NAS43DD3-48	80205	139	
NAS43DD3-48	80205	179	37
NAS43DD3-48	80205	182	
NAS43DD3-48	80205	221	120
NAS43DD3-48	80205	KITS	
NAS43DD3-51	80205	119	
NAS43DD3-56	80205	95	84
NAS43DD3-56	80205	109	
NAS43DD3-56	80205	110	37A
NAS43DD3-56	80205	KITS	
NAS43DD3-6	80205	157	4
NAS43DD3-6	80205	158	4
NAS43DD3-64	80205	95	163
NAS43DD3-64	80205	109	
NAS43DD3-64	80205	119	
NAS43DD3-64	80205	129	
NAS43DD3-64	80205	139	
NAS43DD3-64	80205	143	
NAS43DD3-64	80205	182	
NAS43DD3-64	80205	213	
NAS43DD3-64	80205	253	27C
NAS43DD3-64	80205	KITS	
NAS43DD3-68	80205	BULK	
NAS43DD3-7	80205	BULK	
NAS43DD3-72	80205	36	
NAS43DD3-72	80205	95	110
NAS43DD3-72	80205	95	89
NAS43DD3-76	80205	225	6
NAS43DD3-8	80205	109	
NAS43DD3-8	80205	198	30
NAS43DD3-8	80205	37A	16
NAS43DD3-8	80205	KITS	
NAS43DD3-80	80205	95	100
NAS43DD3-80	80205	95	90
NAS43DD3-80	80205	117	
NAS43DD3-80	80205	119	
NAS43DD3-88	80205	221	18A
NAS43DD3-88	80205	221	20A
NAS43DD3-88	80205	BULK	
NAS43DD3-89	80205	95	52
NAS43DD3-89	80205	275	
NAS43DD3-96	80205	109	
NAS43DD3-96	80205	115	
NAS43DD3-96	80205	178	142
NAS43DD4-108	80205	BULK	
NAS43DD4-12	80205	BULK	
NAS43DD4-12A	80205	BULK	
NAS43DD4-16	80205	119	126
NAS43DD4-16	80205	256	15

REFERENCE NUMBER	MFG CODE	FIG NUMBER	ITEM NUMBER
NAS43DD4-192	80205	BULK	
NAS43DD4-31	80205	226	9
NAS43DD4-47	80205	226	31
NAS43DD4-48	80205	20	
NAS43DD4-56	80205	129	
NAS43DD4-6	80205	BULK	
NAS43DD4-64	80205	228	180
NAS43DD4-64	80205	228	191
NAS43DD4-79	80205	36	19
NAS43DD4-8	80205	257	19C
NAS43DD5-102	80205	223	132
NAS43DD5-232	80205	223	199
NAS43DD5-340	80205	223	216
NAS43DD5-38	80205	275	
NAS43DD5-64	80205	BULK	
NAS43DD5-78	80205	223	142
NAS43DD6-54	80205	223	58
NAS43HT10-124	80205	240	82
NAS43HT10-18	80205	BULK	
NAS43HT3-13	80205	BULK	
NAS43HT3-16	80205	BULK	
NAS43HT3-24	80205	BULK	
NAS43HT4-12	80205	BULK	
NAS43HT4-192	80205	BULK	
NAS43HT4-48	80205	129	
NAS43HT4-55	80205	15	22
NAS43HT4-55	80205	22	57
NAS43HT4-8	80205	BULK	
NAS43HT5-18	80205	BULK	
NAS43HT5-42	80205	BULK	
NAS43HT6-204	80205	244	140
NAS43HT6-50	80205	243	12
NAS43HT6-70	80205	240	43
NAS43HT6-79	80205	244	107
NAS43HT6-79	80205	244	118
NAS43HT7-106	80205	244	129
NAS43HT7-136	80205	236	9
NAS43HT7-331	80205	243	26
NAS43HT7-76	80205	243	19
NAS43HT7-84	80205	236	22
NAS43HT8-104	80205	239	127
NAS43HT8-144	80205	222	134
NAS43HT8-144	80205	237	15
NAS43HT8-90	80205	222	122
NAS43HT8-90	80205	237	43
NAS43HT9-46	80205	238	52
NAS43004-64	80205	228	168
NAS43004-78	80205	228	167
NAS444-14	80205	BULK	
NAS446-5-1	80205	BULK	
NAS451-56	80205	BULK	
NAS463XDD10H	80205	BULK	
NAS463XDD10N0	80205	BULK	
NAS463YDD10H	80205	BULK	
NAS464-10LA45	80205	118	
NAS464-10LA46	80205	118	
NAS464-3A10		KITS	
NAS464-3A10	80205	51	39
NAS464-3A12	80205	BULK	
NAS464-3A15	80205	51	38B
NAS464-3A15		KITS	
NAS464-3A17		KITS	
NAS464-3A17	80205	53	31B
NAS464-3A17	80205	54	15
NAS464-3A9	80205	BULK	
NAS464-4-14	80205	239	119
NAS464-4-14	80205	KITS	
NAS464-4-15	80205	239	133
NAS464-4-16	80205	239	118
NAS464-4-16	80205	240	14
NAS464-4-16	80205	240	16
NAS464-4-16	80205	244	14
NAS464-4-16	80205	244	23
NAS464-4-16	80205	KITS	
NAS464-4-18	80205	222	41A
NAS464-4-18	80205	KITS	
NAS464-4-19	80205	16	6
NAS464-4-19	80205	222	141
NAS464-4-19	80205	222	147
NAS464-4-19	80205	237	18
NAS464-4-19	80205	237	46
NAS464-4-19	80205	239	132
NAS464-4-19	80205	240	15
NAS464-4-19	80205	KITS	
NAS464-4-26	80205	222	140
NAS464-4-26	80205	222	148
NAS464-4-26	80205	222	40
NAS464-4-26	80205	239	98
NAS464-4-26	80205	244	15
NAS464-4-26	80205	244	24
NAS464-4-26	80205	KITS	
NAS464-4-28	80205	242	25
NAS464-4-35	80205	BULK	
NAS464-4-43	80205	242	24
NAS464-4-43	80205	KITS	
NAS464-4A49	80205	242	26
NAS464-4A49	80205	BULK	
NAS464-4A6	80205	21	48A
NAS464-5-16	80205	KITS	
NAS464-5-18	80205	222	41B
NAS464-5-19	80205	239	154
NAS464-5-19	80205	242	22
NAS464-5-19	80205	243	2
NAS464-5-19	80205	244	1
NAS464-5-19	80205	KITS	
NAS464-5-20	80205	222	41C
NAS464-5-20	80205	242	20
NAS464-5-20	80205	244	9
NAS464-5-20	80205	KITS	
NAS464-5-22	80205	243	3
NAS464-5-22	80205	244	8
NAS464-5-22	80205	KITS	
NAS464-5-23	80205	239	12
NAS464-5-23	80205	KITS	
NAS464-5-25	80205	222	106
NAS464-5-25	80205	237	28
NAS464-5-25	80205	KITS	
NAS464-5-26	80205	242	21
NAS464-5-27	80205	222	107
NAS464-5-27	80205	237	1
NAS464-5-27	80205	KITS	
NAS464-5-34	80205	KITS	
NAS464-6-18	80205	BULK	
NAS464-6-20	80205	240	7
NAS464-6-20	80205	KITS	
NAS464-6-42	80205	244	100
NAS464-6-43	80205	240	46
NAS464-6-43	80205	244	110
NAS464-6-43	80205	KITS	
NAS464-6-61	80205	240	35
NAS464-6-75	80205	244	132
NAS464-6-81	80205	KITS	
NAS464-6A41	80205	BULK	
NAS464-6A42	80205	BULK	
NAS464-7-112	80205	KITS	
NAS464-7-50	80205	244	121
NAS464-7-53	80205	236	14
NAS464-7-68	80205	236	1
NAS464-8-23	80205	238	37
NAS464-8-23	80205	KITS	
NAS464-8-40	80205	239	106
NAS464-8-40	80205	KITS	

REFERENCE NUMBER	MFG CODE	FIG NUMBER	ITEM NUMBER	REFERENCE NUMBER	MFG CODE	FIG NUMBER	ITEM NUMBER
NAS464-8-53	80205	222	116	NAS464P6A12	80205	BULK	
NAS464-8-53	80205	237	34	NAS464P6A8	80205	45	8C
NAS464-8-53	80205	KITS		NAS464P6A8	80205	KITS	
NAS464-8-63	80205	239	105	NAS464P6A9	80205	BULK	
NAS464-8-63	80205	KITS		NAS464P7-10	80205	34	38
NAS464-8-68	80205	222	128	NAS464P7-48	80205	KITS	
NAS464-8-68	80205	237	6	NAS464P7A11	80205	34	28
NAS464-8-68	80205	KITS		NAS464P8-16	80205	238	36
NAS464-8-71	80205	239	166	NAS464P8-17	80205	34	50
NAS464-8-71	80205	KITS		NAS464P8-17	80205	BULK	
NAS464-9-15	80205	BULK		NAS464P8LA23	80205	BULK	
NAS464-9-16	80205	BULK		NAS464P8L23	80205	BULK	
NAS464-9-21	80205	BULK		NAS464P8L28	80205	118	38
NAS464-9-22	80205	239	55	NAS464P8L28	80205	KITS	
NAS464-9-24	80205	239	54	NAS464P8L97	80205	69	1
NAS464-9-24	80205	KITS		NAS464P8L99	80205	69	1
NAS464-9-29	80205	BULK		NAS464P8L99	80205	70	15
NAS464-9-44	80205	238	45	NAS464P8L99	80205	KITS	
NAS464PA5	80205	287	33	NAS464P9-14	80205	BULK	
NAS464P3-4	80205	42B		NAS487-13	80205	188	58
NAS464P3-6	80205	42B		NAS487-13	80205	204	
NAS464P3A10	80205	286	25	NAS487-15	80205	165	52
NAS464P3A11	80205	287	24	NAS487-15	80205	KITS	
NAS464P3A11	80205	42B	2	NAS487-16	80205	157	22
NAS464P3A12	80205	42B	2	NAS487-16	80205	157	31
NAS464P3A4	80205	286	15	NAS487-16	80205	157	36
NAS464P3A4	80205	42B		NAS487-16	80205	157	48
NAS464P3A5	80205	287	30	NAS487-16	80205	157	54
NAS464P3A6	80205	287	29	NAS487-16	80205	157	60
NAS464P3A6	80205	42B	1	NAS487-16	80205	158	20
NAS464P3A7	80205	285	52	NAS487-16	80205	158	24
NAS464P3A8	80205	285	57	NAS487-16	80205	158	31
NAS464P3A9	80205	42B		NAS487-16	80205	158	43
NAS464P3A9	80205	BULK		NAS487-16	80205	158	49
NAS464P4-17	80205	21	25	NAS487-16	80205	158	55
NAS464P4-17	80205	222	41	NAS487-16	80205	KITS	
NAS464P4-49	80205	KITS		NAS487-17	80205	157	22
NAS464P4-9	80205	21	25	NAS487-17	80205	157	31
NAS464P4A10	80205	287	26	NAS487-17	80205	157	36
NAS464P4A12	80205	286	18	NAS487-17	80205	157	48
NAS464P4A12	80205	287	31	NAS487-17	80205	157	54
NAS464P4A13	80205	287	24	NAS487-17	80205	157	60
NAS464P4A14	80205	BULK		NAS487-17	80205	158	20
NAS464P4A16	80205	BULK		NAS487-17	80205	158	24
NAS464P4A4	80205	284	1	NAS487-17	80205	158	31
NAS464P4A6	80205	284	3	NAS487-17	80205	158	43
NAS464P4A6	80205	285	5	NAS487-17	80205	158	49
NAS464P4A6	80205	286	21	NAS487-17	80205	158	55
NAS464P4A8	80205	284	2	NAS487-17	80205	KITS	
NAS464P4A8	80205	285	2	NAS501-4-15A	80205	22	58
NAS464P4A9	80205	44	12B	NAS509-10	80205	21	
NAS464P4A9	80205	285	1	NAS509-10	80205	72	20
NAS464P4A9	80205	287	25	NAS509-10	80205	72	51
NAS464P4A9	80205	KITS		NAS509-10	80205	72	98
NAS464P5-21	80205	239	18	NAS509-10	80205	73	22
NAS464P5-9	80205	42B		NAS509-10	80205	74	9
NAS464P5A26	80205	BULK		NAS509-10	80205	222	
NAS464P5A26	80205	KITS		NAS509-10	80205	222	213
NAS464P5A9	80205	284	23	NAS509-10	80205	244	
NAS464P5A9	80205	285	23	NAS509-10	80205	KITS	
NAS464P6-15	80205	45	10A	NAS509-14	80205	72	80
NAS464P6-17	80205	239	88	NAS509-14	80205	74	28
NAS464P6-17	80205	KITS		NAS509-14	80205	219	
NAS464P6-19	80205	239	5	NAS509-14	80205	KITS	
NAS464P6-19	80205	239	87	NAS509-14	80205	219A	151
NAS464P6-19	80205	KITS		NAS509-14	80205	219A	52
NAS464P6-22	80205	239	6	NAS509-17	80205	BULK	
NAS464P6-31	80205	45	11	NAS509-17	80205	219A	155
NAS464P6-42	80205	49	57B	NAS509-17	80205	219A	48
NAS464P6-42	80205	BULK		NAS509-4	80205	228	127C
NAS464P6-44	80205	51	75	NAS509-5	80205	66	20

REFERENCE NUMBER	MFG CODE	FIG NUMBER	ITEM NUMBER
NAS509-5	80205	245	23
NAS509-6	80205	66	
NAS509-6	80205	66	8
NAS509-6	80205	224	4
NAS509-6	80205	228	22
NAS509-7	80205	BULK	
NAS509-8	80205	42B	38
NAS509-9	80205	222	
NAS509-9	80205	222	213
NAS509-9	80205	244	
NAS509-9	80205	248	60
NAS509L5	80205	66	20A
NAS509L8	80205	42B	37
NAS513-10	80205	21	
NAS513-14	80205	72	81
NAS513-14	80205	74	27
NAS513-5	80205	66	21
NAS513-6	80205	66	
NAS513-6	80205	66	7
NAS513-6	80205	228	23
NAS513-7	80205	BULK	
NAS513-9	80205	248	61
NAS514P1032-12	80205	BULK	
NAS514P440-14B	80205	184	53
NAS514P440-6P	80205	189A	8
NAS514P440-8P	80205	BULK	
NAS514P632-10P	80205	189A	24
NAS514P632-5B	80205	BULK	
NAS514P632-6B	80205	184	
NAS514P632-6B	80205	184	24
NAS514P632-6P	80205	189A	11
NAS514P632-7P	80205	189A	14
NAS514P832-18	80205	189A	1
NAS520-14-96	80205	BULK	
NAS520-20-96	80205	BULK	
NAS520-28-96	80205	BULK	
NAS520-34-96	80205	BULK	
NAS520-4-21	80205	249	
NAS520-4-96	80205	BULK	
NAS520-58-96	80205	BULK	
NAS520-60-96	80205	BULK	
NAS521-14-12	80205	253	3
NAS521-14-12	80205	253	33
NAS521-14-8	80205	253	49
NAS521-20-12	80205	253	16
NAS521-20-12	80205	253	6
NAS521-28-12	80205	251	53
NAS521-28-12	80205	253	19
NAS521-28-12	80205	253	38
NAS521-34-12	80205	251	51
NAS521-34-12	80205	255	7
NAS521-36-12	80205	251	57
NAS521-52-12	80205	251	49
NAS521-60-12	80205	251	7
NAS528A6	80205	BULK	
NAS529-6-6	80205	BULK	
NAS538B12P094	80205	BULK	
NAS538B14P094	80205	42B	19A
NAS549L4	80205	BULK	
NAS557-28	80205	204	
NAS557-32B	80205	BULK	
NAS557-36	80205	204	
NAS557-4A	80205	193	94
NAS557-8-8	80205	36	27
NAS558-606-10	80205	81	180
NAS559-1	80205	245	24
NAS559-3	80205	BULK	
NAS559-4	80205	222	
NAS559-4	80205	244	
NAS559-4	80205	KITS	
NAS559-6	80205	72	82
NAS559-6	80205	74	26
NAS561C3-11	80205	BULK	
NAS561C3-11	80205	KITS	
NAS561C3-24	80205	11	133E
NAS561C4-22		KITS	
NAS561C5-11	80205	BULK	
NAS561C6-22	80205	51	13
NAS561F2-5		KITS	
NAS561F2-8		KITS	
NAS561P2-13	80205	BULK	
NAS561P5-11	80205	24	24
NAS561P5-11	80205	KITS	
NAS577-4	80205	240	
NAS577-4A	80205	20	
NAS577-4A	80205	62	
NAS577-4A	80205	11B	98
NAS577-4A	80205	KITS	
NAS577-5	80205	223	151
NAS577-5A	80205	20	
NAS577-6		KITS	
NAS577-6A	80205	28	24Q
NAS577-6A	80205	KITS	
NAS577-7A	80205	240	
NAS577-8A	80205	11B	
NAS578-4A	80205	20	
NAS578-4A	80205	240	
NAS578-4B	80205	62	
NAS578-4B	80205	11B	99
NAS578-4B	80205	KITS	
NAS578-5B	80205	223	152
NAS578-6A	80205	28	24P
NAS578-6A	80205	KITS	
NAS578-7A	80205	240	
NAS578-8B	80205	11B	
NAS591-10	80205	BULK	
NAS591-16H	80205	BULK	
NAS591-4	80205	BULK	
NAS591-8	80205	BULK	
NAS592-10E	80205	221	115
NAS592-10E	80205	BULK	
NAS592-16	80205	221	73
NAS592-16E	80205	211	26A
NAS592-16E	80205	213	15
NAS592-16E	80205	218	70
NAS592-16E	80205	219	27
NAS592-16E	80205	219	74
NAS592-16E	80205	219	78
NAS592-16E	80205	220	12
NAS592-16E	80205	220	18
NAS592-16E	80205	221	28
NAS592-16E	80205	221	45
NAS592-16E	80205	KITS	
NAS592-16E	80205	219A	104
NAS592-16E	80205	219A	196
NAS592-16B	80205	218	61A
NAS592-4E	80205	BULK	
NAS592-6E	80205	219	28
NAS592-8E	80205	BULK	
NAS593-10H	80205	BULK	
NAS593-12	80205	BULK	
NAS593-16H	80205	BULK	
NAS593-4	80205	BULK	
NAS593-6	80205	BULK	
NAS593-8	80205	BULK	
NAS594-4	80205	BULK	
NAS596-4	80205	BULK	
NAS600-10P	80205	193	28A
NAS600-6P	80205	193	8
NAS608C440H4	80205	68	1
NAS608C440H4	80205	107	13
NAS609-4-8	80205	BULK	

REFERENCE NUMBER	MFG CODE	FIG NUMBER	ITEM NUMBER
NAS617-10	80205	71	18
NAS617-10	80205	76	105
NAS617-10	80205	81	53
NAS617-10	80205	83	165
NAS617-10	80205	83	58
NAS617-10	80205	88	20
NAS617-10	80205	89	22
NAS617-10	80205	95	79
NAS617-10	80205	KITS	
NAS617-16	80205	88	12
NAS617-16	80205	89	17
NAS617-16	80205	95	106
NAS617-16	80205	95	47
NAS617-16	80205	95	48
NAS617-16	80205	95	56
NAS617-16	80205	95	64
NAS617-16	80205	95	70
NAS617-16	80205	95	76
NAS617-16	80205	95	77
NAS617-16	90205	95	81
NAS617-16	80205	95	94
NAS617-16	80205	95	98
NAS617-16	80205	QC1	177
NAS617-16	80205	KITS	
NAS617-2		KITS	
NAS617-2	80205	71	31
NAS617-2	80205	71	56
NAS617-2	80205	71	84
NAS617-2	80205	71	94
NAS617-2	80205	KITS	
NAS617-2	80205	KITS	
NAS617-20		KITS	
NAS617-20	80205	76	36
NAS617-20	80205	95	124
NAS617-20	80205	95	137
NAS617-20	80205	95	141
NAS617-20	80205	95	2
NAS617-20	80205	95	34
NAS617-20	80205	95	4
NAS617-20	80205	KITS	
NAS617-24	80205	KITS	
NAS617-3	80205	87	18
NAS617-3	80205	87	6
NAS617-4	80205	62	
NAS617-4	80205	81	117
NAS617-4	80205	87	20
NAS617-4	80205	93	19
NAS617-4	80205	93	21
NAS617-4	80205	93	26
NAS617-4	80205	95	178
NAS617-4	80205	QC1	141
NAS617-4	80205	217	
NAS617-4	80205	KITS	
NAS617-4	80205	217A	18
NAS617-4	80205	217A	19
NAS617-4	80205	217B	20
NAS617-5	80205	71	25
NAS617-5	80205	71	8
NAS617-5	80205	76	107
NAS617-5	80205	76	42
NAS617-5	80205	81	55
NAS617-5	80205	83	167
NAS617-5	80205	83	262
NAS617-5	80205	83	60
NAS617-5	80205	88	22
NAS617-5	80205	89	24
NAS617-5	80205	KITS	
NAS617-6	80205	76	77
NAS617-6	80205	95	154
NAS617-6	80205	95	93
NAS617-6	80205	248	31
NAS617-6	80205	KITS	
NAS617-8	80205	71	23
NAS617-8	80205	71	86
NAS617-8	80205	75	88
NAS617-8	80205	79	18
NAS617-8	80205	83	158
NAS617-8	80205	83	51
NAS617-8	80205	88	100D
NAS617-8	80205	95	143
NAS617-8	80205	95	165
NAS617-8	80205	95	169
NAS617-8	80205	95	172
NAS617-8	80205	95	8
NAS617-8	80205	139	79
NAS617-8	80205	KITS	
NAS62A10L	80205	228	140
NAS620-10	80205	190A	21
NAS620-10L	80205	284	11
NAS620-10L	80205	285	51
NAS620-10L	80205	285	8
NAS620-10L	80205	286	2
NAS620-10L	80205	287	2
NAS620-10L	80205	190A	22
NAS620-4L	80205	183A	67
NAS620-416	80205	287	27
NAS620-416L	80205	284	4
NAS620-416L	80205	286	19
NAS620-416L	80205	287	20
NAS620-5L	80205	189A	37
NAS620-6L	80205	191	24
NAS620-6L	80205	194	2
NAS620-6L	80205	194	226
NAS620-6L	80205	195	22
NAS620-8L	80205	284	8
NAS620-8L	80205	285	12
NAS620-8L	80205	286	6
NAS620-8L	80205	287	6
NAS620A10L	80205	20	71
NAS620A10L	80205	72	27
NAS620A10L	80205	72	58
NAS620A10L	80205	73	2
NAS620A10L	80205	74	16
NAS620A10L	80205	228	144
NAS620A10L	80205	253	45A
NAS620A10L	80205	KITS	
NAS620A2	80205	234	34
NAS620A4	80205	107	13A
NAS620A4L	80205	182	
NAS624-12	80205	BULK	
NAS624-14	80205	228	129C
NAS624-14	80205	KITS	
NAS624-15	80205	BULK	
NAS624-18	80205	11B	10
NAS624-6	80205	228	104
NAS624-6	80205	KITS	
NAS624H14	80205	11B	95
NAS624H6	80205	71	90
NAS624H6	80205	KITS	
NAS625-14	80205	11	13
NAS625-16	80205	BULK	
NAS625-18	80205	BULK	
NAS625-22	80205	BULK	
NAS625-24	80205	BULK	
NAS625-26	80205	81	142
NAS625-26	80205	83	286
NAS625-29	80205	45	
NAS625-44	80205	83	279
NAS625H50	80205	45	
NAS625H6	80205	273	5
NAS626-11	80205	76	165A
NAS626-11	80205	81	183

REFERENCE NUMBER	MFG CODE	FIG NUMBER	ITEM NUMBER
NAS626-11	80205	83	316
NAS626-12	80205	81	183
NAS626-16	80205	11	55
NAS626-18	80205	11	34
NAS626-20	80205	11	27
NAS626-22	80205	BULK	
NAS626-30	80205	11C	47
NAS627-20	80205	118	123
NAS627-20	80205	240	1
NAS627-22	80205	11	28
NAS627-22	80205	116	123
NAS627-24	80205	BULK	
NAS627-26	80205	BULK	
NAS627-30	80205	BULK	
NAS627-38	80205	BULK	
NAS627-46	80205	BULK	
NAS627-48	80205	BULK	
NAS627-52	80205	BULK	
NAS627-72	80205	BULK	
NAS627-76	80205	BULK	
NAS627-78	80205	BULK	
NAS628-10	80205	BULK	
NAS628-20	80205	BULK	
NAS628-25	80205	BULK	
NAS628-26	80205	BULK	
NAS628-28	80205	BULK	
NAS628-30	80205	240	2
NAS628-32	80205	BULK	
NAS628-34	80205	76	1
NAS628-37	80205	83	244
NAS628-40	80205	81	99
NAS628-42	80205	11	81
NAS628-44	80205	BULK	
NAS628-46	80205	11	80
NAS628-48	80205	81	98
NAS628-50	80205	83	249
NAS628-74	80205	93	247
NAS628-78	80205	81	97
NAS628H6	80205	KITS	
NAS629-32	80205	BULK	
NAS629H6	80205	62	20
NAS629H6	80205	QC1	186
NAS630-32	80205	BULK	
NAS630-36	80205	BULK	
NAS632-38	80205	11	75
NAS632-40	80205	11	75
NAS632-42	80205	11B	
NAS634-44	80205	BULK	
NAS634-46	80205	91	3
NAS634-46	80205	KITS	
NAS634-48	80205	BULK	
NAS636-36	80205	43	9
NAS638-48	80205	43	9
NAS652DD16	80205	BULK	
NAS658-100	80205	270	11
NAS658-100	80205	270	20
NAS658-32	80205	270	23
NAS6604-13	80205	75	1
NAS6604-15	80205	75	1
NAS6604-9	80205	75	1
NAS662-2R4	80205	182A	11
NAS669-137		KITS	
NAS669-37		KITS	
NAS669-68		KITS	
NAS669-68	80205	53	6
NAS669-68	80205	216	64
NAS670-31		KITS	
NAS670-31	80205	KITS	
NAS671-6	80205	BULK	
NAS671C4	80205	186A	1
NAS674V12	80205	75	117
NAS674V14	80205	75	115
NAS679C08M	80205	284	7
NAS679C08M	80205	285	11
NAS679C08M	80205	286	5
NAS679C08M	80205	287	5
NAS679C3	80205	285	53
NAS679C3M	80205	284	10
NAS679C3M	80205	286	1
NAS679C3M	80205	287	23
NAS679C3M	80205	64A	47
NAS679C3M	80205	64A	69
NAS679C4M	80205	284	38
NAS679C4M	80205	286	22
NAS679C4M	80205	287	23
NAS686A3	80205	284	48
NAS690A14-1	80205	69	31
NAS696C06M	80205	BULK	
NAS697A06	80205	184	16
NAS72-4E102	80205	32	
NAS73-4-002	80205	36	12
NAS73-4-003	80205	20	
NAS73-4-105	80205	20	
NAS73-4E102	80205	20	
NAS73-4E107	80205	31	28A
NAS73-4E304	80205	31	28
NAS74-4-005	80205	275	
NAS75-10-016	80205	11B	92
NAS75-10-022	80205	11B	93
NAS75-10-408	80205	BULK	
NAS75-12-022	80205	44	36
NAS75-12-022	80205	45	4
NAS75-12-024	80205	44	35
NAS75-12-024	80205	45	5
NAS75-12-028	80205	239	26
NAS75-12-028	80205	239	60
NAS75-12-408	80205	BULK	
NAS75-16-015	80205	42A	41
NAS75-16-015	80205	42C	38
NAS75-16-016	80205	42A	41
NAS75-16-016	80205	42C	38
NAS75-16-019	80205	42B	21
NAS75-16-305	80205	42B	82
NAS75-20-019	80205	222	
NAS75-20-123	80205	11C	44B
NAS75-3-003	80205	BULK	
NAS75-3-004	80205	32	
NAS75-3-004	80205	32	23
NAS75-3-005	80205	BULK	
NAS75-3-006	80205	11	70A
NAS75-3-007	80205	228	163
NAS75-3-008	80205	245	4
NAS75-3-008	80205	246	8B
NAS75-3-009	80205	245	26
NAS75-3-013	80205	270	34
NAS75-3-016	80205	BULK	
NAS75-3-018	80205	BULK	
NAS75-3-020	80205	BULK	
NAS75-3-103	80205	BULK	
NAS75-3-105	80205	BULK	
NAS75-4-003	80205	15	31E
NAS75-4-003	80205	16	27
NAS75-4-004	80205	31	
NAS75-4-004	80205	31	25D
NAS75-4-005	80205	17	23
NAS75-4-006	80205	BULK	
NAS75-4-007	80205	223	128
NAS75-4-007	80205	235	27
NAS75-4-007	80205	235	33
NAS75-4-007	80205	239	63
NAS75-4-008	80205	20	
NAS75-4-008	80205	20	26

REFERENCE NUMBER	MFG CODE	FIG NUMBER	ITEM NUMBER
NAS75-4-008	80205	20	52
NAS75-4-008	80205	223	140
NAS75-4-008	80205	223	172
NAS75-4-008	80205	223	173
NAS75-4-008	80205	223	210
NAS75-4-008	80205	223	222
NAS75-4-008	80205	223	227
NAS75-4-008	80205	223	233
NAS75-4-008	80205	226	17
NAS75-4-008	80205	228	164
NAS75-4-008	80205	235	23
NAS75-4-008	80205	238	32
NAS75-4-008	80205	239	137
NAS75-4-008	80205	239	146
NAS75-4-009	80205	10	3
NAS75-4-009	80205	20	
NAS75-4-009	80205	34	
NAS75-4-009	80205	223	119
NAS75-4-009	80205	223	129
NAS75-4-009	80205	223	181
NAS75-4-009	80205	223	182
NAS75-4-009	80205	223	195
NAS75-4-009	80205	223	196
NAS75-4-009	80205	223	211
NAS75-4-009	80205	223	212
NAS75-4-009	80205	223	60
NAS75-4-009	80205	240	50
NAS75-4-009	80205	242	28
NAS75-4-009	80205	273	22C
NAS75-4-009	80205	428	40
NAS75-4-010	80205	223	153
NAS75-4-010	80205	223	67
NAS75-4-010	80205	235	17
NAS75-4-010	80205	235	28
NAS75-4-010	80205	236	18
NAS75-4-010	80205	238	25
NAS75-4-010	80205	239	124
NAS75-4-010	80205	239	29
NAS75-4-010	80205	239	37
NAS75-4-010	80205	239	70
NAS75-4-010	80205	244	125
NAS75-4-010	80205	244	136
NAS75-4-011	80205	222	118
NAS75-4-011	80205	222	130
NAS75-4-011	80205	235	18
NAS75-4-011	80205	237	11
NAS75-4-011	80205	237	39
NAS75-4-011	80205	240	39
NAS75-4-011	80205	240	58
NAS75-4-012	80205	11	112
NAS75-4-012	80205	11	116
NAS75-4-012	80205	11	118
NAS75-4-012	80205	228	177
NAS75-4-012	80205	228	188
NAS75-4-012	80205	236	5
NAS75-4-012	80205	239	138
NAS75-4-013	80205	228	
NAS75-4-014	80205	240	59
NAS75-4-017	80205	BULK	
NAS75-4-028	80205	21	15
NAS75-4-028	80205	223	96
NAS75-5-004	80205	31	
NAS75-5-004	80205	428	47
NAS75-5-008	80205	62	30
NAS75-5-008	80205	QC1	
NAS75-5-008	80205	11A	1D
NAS75-5-008	80205	223	220
NAS75-5-008	80205	223	239
NAS75-5-010	80205	223	243
NAS75-5-010	80205	239	45
NAS75-5-010	80205	240	40
NAS75-5-010	80205	240	60
NAS75-5-010	80205	243	10
NAS75-5-011	80205	238	50
NAS75-5-011	80205	239	168
NAS75-5-011	80205	240	51
NAS75-5-011	80205	240	77
NAS75-5-011	80205	243	23
NAS75-5-011	80205	244	104
NAS75-5-011	80205	244	126
NAS75-5-012	80205	236	6
NAS75-5-012	80205	239	122
NAS75-5-012	80205	239	145
NAS75-5-012	80205	239	174
NAS75-5-012	80205	243	16
NAS75-5-012	80205	244	137
NAS75-5-013	80205	236	19
NAS75-5-013	80205	239	158
NAS75-5-013	80205	240	91
NAS75-5-014	80205	222	119
NAS75-5-014	80205	237	40
NAS75-5-014	80205	244	115
NAS75-5-015	80205	222	131
NAS75-5-015	80205	237	12
NAS75-5-018	80205	37	
NAS75-5-030	80205	BULK	
NAS75-6-003	80205	240	57
NAS75-6-003	80205	BULK	
NAS75-6-004	80205	17	24
NAS75-6-006	80205	223	100
NAS75-6-007	80205	BULK	
NAS75-6-009	80205	11C	31
NAS75-6-009	80205	11C	61
NAS75-6-009	80205	244	143
NAS75-6-009	80205	244	149
NAS75-6-011	80205	11C	63
NAS75-6-011	80205	239	69
NAS75-6-011	80205	239	78
NAS75-6-011	80205	244	147
NAS75-6-012	80205	11B	31
NAS75-6-012	80205	239	136
NAS75-6-012	80205	240	78
NAS75-6-012	80205	243	29
NAS75-6-013	80205	239	157
NAS75-6-013	80205	240	92
NAS75-6-020	80205	223	154
NAS75-6-021	80205	11C	33
NAS75-6-021	80205	222	101
NAS75-6-021	80205	222	183
NAS75-6-022	80205	240	66
NAS75-6-031	80205	16	20
NAS75-6-031	80205	16	7
NAS75-6-101	80205	240	67
NAS75-7-004	80205	20	
NAS75-7-009	80205	11C	57
NAS75-7-009	80205	244	145
NAS75-7-010	80205	20	
NAS75-7-013	80205	31	30
NAS75-7-015	80205	11B	11B
NAS75-7-015	80205	243	31
NAS75-7-015	80205	243	33
NAS75-7-016	80205	11B	13B
NAS75-7-017	80205	102	34
NAS75-7-018	80205	11	17
NAS75-7-018	80205	236	25
NAS75-7-020	80205	11	11
NAS75-7-020	80205	236	12
NAS75-7-023	80205	31	29
NAS75-7-027	80205	31	29
NAS75-8-007	80205	BULK	
NAS75-8-008	80205	238	30
NAS75-8-013	80205	62	22

REFERENCE NUMBER	MFG CODE	FIG NUMBER	ITEM NUMBER
NAS75-8-013	80205	11B	39
NAS75-8-013	80205	11B	39A
NAS75-8-014	80205	11B	39C
NAS75-8-015	80205	238	53
NAS75-8-016	80205	BULK	
NAS75-8-017	80205	21	95
NAS75-8-018	80205	239	110
NAS75-8-019	80205	42B	23
NAS75-8-020	80205	11	11
NAS75-8-020	80205	264	12
NAS75-8-021	80205	11C	34
NAS75-8-021	80205	11C	41
NAS75-8-025	80205	11C	35
NAS75-8-025	80205	222	
NAS75-8-025	80205	222	169
NAS75-8-025	80205	222	64
NAS75-8-025	80205	244	
NAS75-8-028	80205	239	111
NAS75-8-031	80205	16	17
NAS75-8-031	80205	244	
NAS75-8-117	80205	239	170
NAS75-8-128	80205	16	16
NAS75-8-128	80205	16	19
NAS75-9-014	80205	238	22
NAS75-9-015	80205	239	35
NAS75-9-015	80205	239	49
NAS76A12-014	80205	BULK	
NAS76A3-009	80205	228	
NAS76A5-029	80205	21	
NAS76A5-116P	80205	22	14
NAS77-10	80205	228	161
NAS77-10-16	80205	11	37
NAS77-10-181	80205	11B	88
NAS77-10-192	80205	11B	88
NAS77-10-25	80205	11B	91
NAS77-10-30	80205	11	53
NAS77-10-46	80205	11B	91
NAS77-12-38	80205	239	27
NAS77-12-38	80205	239	61
NAS77-20-200	80205	11	82B
NAS77-20-200	80205	11	82C
NAS77-3-10	80205	229	15
NAS77-3-10	80205	245	5
NAS77-3-10	80205	246	8C
NAS77-3-11	80205	228	162
NAS77-3-13	80205	15	20
NAS77-3-13	80205	245	27
NAS77-3-20	80205	20	101B
NAS77-3-20	80205	20	91
NAS77-3-21	80205	BULK	
NAS77-3-25	80205	BULK	
NAS77-3-31	80205	BULK	
NAS77-3-5	80205	BULK	
NAS77-4-10	80205	273	22D
NAS77-4-11	80205	15	19
NAS77-4-11	80205	223	130
NAS77-4-12	80205	15	28
NAS77-4-12	80205	15	29
NAS77-4-12	80205	223	223
NAS77-4-12	80205	235	29
NAS77-4-13	80205	223	61
NAS77-4-14	80205	17	8
NAS77-4-14	80205	20	
NAS77-4-14	80205	223	141
NAS77-4-15	80205	20	
NAS77-4-15	80205	20	27
NAS77-4-15	80205	20	53
NAS77-4-15	80205	25	3
NAS77-4-15	80205	37	42
NAS77-4-15	80205	235	35
NAS77-4-16	80205	10	2
NAS77-4-16	80205	223	174
NAS77-4-16	80205	223	175
NAS77-4-16	80205	223	213
NAS77-4-16	80205	42A	20
NAS77-4-16	80205	42B	26
NAS77-4-16	80205	42C	21
NAS77-4-17	80205	223	68
NAS77-4-18	80205	16	14
NAS77-4-18	80205	223	214
NAS77-4-18	80205	226	18
NAS77-4-18	80205	42B	76
NAS77-4-19	80205	223	131
NAS77-4-19	80205	223	183
NAS77-4-19	80205	223	184
NAS77-4-19	80205	228	165
NAS77-4-19	80205	235	24
NAS77-4-20	80205	11A	38
NAS77-4-20	80205	223	155
NAS77-4-20	80205	223	197
NAS77-4-20	80205	223	198
NAS77-4-20	80205	235	19
NAS77-4-20	80205	235	30
NAS77-4-22	80205	42B	41
NAS77-4-22	80205	42B	55
NAS77-4-23	80205	11	113
NAS77-4-23	80205	11	117
NAS77-4-23	80205	11	119
NAS77-4-23	80205	16	8
NAS77-4-23	80205	228	178
NAS77-4-23	80205	228	189
NAS77-4-24	80205	223	120
NAS77-4-24	80205	223	215
NAS77-4-25	80205	222	121
NAS77-4-25	80205	222	132
NAS77-4-25	80205	237	13
NAS77-4-25	80205	237	42
NAS77-4-30	80205	25	5
NAS77-4-32	80205	BULK	
NAS77-4-44	80205	BULK	
NAS77-4-9	80205	235	34
NAS77-4-90	80205	BULK	
NAS77-5-12	80205	42B	48
NAS77-5-13	80205	21	65
NAS77-5-13	80205	223	244
NAS77-5-14	80205	62	29
NAS77-5-14	80205	QC1	
NAS77-5-15	80205	223	221
NAS77-5-17	80205	22	13
NAS77-5-18	80205	13	94F
NAS77-5-18	80205	22	23
NAS77-5-18	80205	37	43
NAS77-5-22	80205	33	
NAS77-5-23	80205	22	4
NAS77-5-24	80205	223	240
NAS77-5-25	80205	239	169
NAS77-5-26	80205	239	123
NAS77-5-26	80205	239	147
NAS77-5-26	80205	243	17
NAS77-5-26	80205	243	24
NAS77-5-26	80205	244	105
NAS77-5-27	80205	223	156
NAS77-5-28	80205	22	28
NAS77-5-28	80205	244	138
NAS77-5-29	80205	21	26E
NAS77-5-30	80205	11A	1C
NAS77-5-31	80205	222	120
NAS77-5-31	80205	237	41
NAS77-5-31	80205	240	93
NAS77-5-32	80205	236	20
NAS77-5-32	80205	244	127
NAS77-5-33	80205	223	157

REFERENCE NUMBER	MFG CODE	FIG NUMBER	ITEM NUMBER	REFERENCE NUMBER	MFG CODE	FIG NUMBER	ITEM NUMBER
NAS77-5-33	80205	236	7	NAS77-8-40	80205	62	22
NAS77-5-36	80205	244	116	NAS77-8-42	80205	11	18
NAS77-5-38	80205	22	16	NAS77-8-44	80205	22	10
NAS77-5-38	80205	222	133	NAS77-8-44	80205	22	20
NAS77-5-38	80205	237	14	NAS77-8-44	80205	264	11
NAS77-5-44	80205	223	157	NAS77-8-56	80205	62	
NAS77-5-47	80205	21	62	NAS77-8-58	80205	239	112
NAS77-5-54	80205	16	2	NAS77-8-68	80205	239	172
NAS77-5-62	80205	22	27	NAS77-9-31	80205	238	23
NAS77-5-66	80205	21	77	NAS77A3-10P	80205	BULK	
NAS77-5-70	80205	234	41	NAS77A3-12P	80205	228	92
NAS77-5-70	80205	234	6	NAS77A3-20	80205	BULK	
NAS77-6-16	80205	11C	32	NAS77A3-25P	80205	BULK	
NAS77-6-16	80205	244	150	NAS77A3-28	80205	228	90
NAS77-6-18	80205	11C	64	NAS77A3-31	80205	228	91
NAS77-6-18	80205	244	148	NAS77A5-19	80205	BULK	
NAS77-6-19	80205	11C	62	NAS77A8-262	80205	15	37
NAS77-6-19	80205	240	68	NAS77A9-39	80205	263	12
NAS77-6-19	80205	244	144	NAS811-10A	80205	KITS	
NAS77-6-20	80205	20		NAS811-12A	80205	BULK	
NAS77-6-20	80205	20	101A	NAS811-12A	80205	KITS	
NAS77-6-20	80205	428	22	NAS811-16A	80205	BULK	
NAS77-6-29	80205	11	133A	NAS811-16A	80205	KITS	
NAS77-6-30	80205	15	18	NAS811-20A	80205	BULK	
NAS77-6-30	80205	42A	42	NAS811-20A	80205	KITS	
NAS77-6-30	80205	42C	39	NAS811-4A	80205	BULK	
NAS77-6-32	80205	22	52	NAS811-4A	80205	KITS	
NAS77-6-33	80205	239	159	NAS811-6A	80205	BULK	
NAS77-6-35	80205	22	51	NAS811-6A	80205	KITS	
NAS77-6-37	80205	BULK		NAS811-8A	80205	BULK	
NAS77-6-45	80205	11B	32	NAS811-8A	80205	KITS	
NAS77-6-45	80205	243	30	NAS813-14		KITS	
NAS77-6-455	80205	BULK		NAS813-16	80205	212	34
NAS77-6-58	80205	223	158	NAS814-12	80205	BULK	
NAS77-6-69	80205	22	46	NAS814-6	80205	BULK	
NAS77-6-74	80205	BULK		NAS815-10A	80205	BULK	
NAS77-6-75	80205	240	69	NAS815-12A	80205	BULK	
NAS77-7-118	80205	BULK		NAS815-16A	80205	BULK	
NAS77-7-13	80205	BULK		NAS815-4A	80205	BULK	
NAS77-7-15	80205	31	20	NAS815-5		KITS	
NAS77-7-16	80205	11C	58	NAS815-5A	80205	BULK	
NAS77-7-18	80205	11C	58	NAS815-6A	80205	BULK	
NAS77-7-18	80205	244	146	NAS816-115	80205	BULK	
NAS77-7-19	80205	BULK		NAS816-123	80205	83	
NAS77-7-24	80205	32		NAS816-123	80205	BULK	
NAS77-7-27	80205	BULK		NAS816-145	80205	BULK	
NAS77-7-29	80205	21	26D	NAS816-158	80205	83	
NAS77-7-32	80205	11B	11A	NAS816-158	80205	BULK	
NAS77-7-32	80205	243	34	NAS816-48	80205	83	
NAS77-7-36	80205	11B	13A	NAS816-48	80205	BULK	
NAS77-7-36	80205	243	32	NAS816-62	80205	BULK	
NAS77-7-42	80205	11	18	NAS816-65	80205	83	
NAS77-7-42	80205	236	26	NAS816-65	80205	BULK	
NAS77-7-48	80205	11	11A	NAS816-72	80205	BULK	
NAS77-7-48	80205	236	13	NAS816-75	80205	83	
NAS77-7-59	80205	11C	13A	NAS816-75	80205	BULK	
NAS77-8-12	80205	22	50	NAS816-91	80205	BULK	
NAS77-8-14	80205	BULK		NAS816-98	80205	BULK	
NAS77-8-18	80205	21	96	NAS818-16	80205	212	35
NAS77-8-19	80205	62	23	NAS818-4		KITS	
NAS77-8-19	80205	239	109	NAS818-4	80205	BULK	
NAS77-8-24	80205	11B	17	NAS818-5		KITS	
NAS77-8-24	80205	11B	41	NAS818-8	80205	BULK	
NAS77-8-30	80205	11B	40	NA516	86329	82	24
NAS77-8-30	80205	11B	40A	NA517	86329	82	27
NAS77-8-32	80205	22	10	NF205	05820	189A	87
NAS77-8-32	80205	22	20	NK4C13	02615	37	40
NAS77-8-34	80205	F15	36	NK4C13	02615	KITS	
NAS77-8-34	80205	F15	42	NK5C13	02615	37	41
NAS77-8-36	80205	22	10	NK5C13	02615	KITS	
NAS77-8-36	80205	22	20	NK503-8-6	56878	120	6

REFERENCE NUMBER	MFG CODE	FIG NUMBER	ITEM NUMBER
NK503-8-6		KITS	
NK505-2-5		230	12
NK505-2-5		231	15
NK505-2-5		KITS	
NK505-5-6	07368	148	228
NK507-440-4	02615	203	19
NK525D10-6	83512	56	4
NK525D10R9	02615	207	
NO12	84063	MSUP	
NP227844	61349	162	3
NTA1220	78784	26	5
NTA2435	78784	26	25
NTA815	60380	230	83
NYLC10-1	05624	192	84
NYLC1097	05624	67A	31
NYLC1131	05624	67A	70
NYLC1148	05624	67A	56
NYLC1210	05624	67A	18
NYLC1218-1	05624	67A	78
NYLC1229	05624	67A	9
NYLC1232	05624	67A	2
NYLC1233	05624	67A	8
NYLC1234	05624	67A	48
NYLC1235	05624	67A	49
NYLC1236	05624	67A	34
NYLC1239-1	05624	67A	62
NYLC1240-1	05624	67A	63
NYLC1242-1	05624	67A	64
NYLC1243-1	05624	67A	66
NYLC1244-1	05624	67A	59
NYLC1248	05624	67A	58
NYLC1249	05624	67A	47
NYLC1253-1	05624	67A	57
NYLC1268	05624	67A	60
NYLC1308	05624	67A	55
NYLC1311	05624	67A	
NYLC144	05624	192	80
NYLC144	05624	232	20
NYLC180-1	05624	67A	42
NYLC198-1	05624	192	76
NYLC230	05624	67A	37
NYLC238	05624	67A	36
NYLC46	05624	192	98
NYLC469	05624	67A	46A
NYLC586	05624	67A	23
NYLC588	05624	67A	39
NYLC6	05624	192	81
NYLC6	05624	232	19
NYLC68	05624	192	100
NYLC732	05624	192	63A
NYLC7560-2	05624	192	62
NYLC7560-3	05624	192	62
NYLC96	05624	192	93
NYLC96	05624	67A	54
NYLC993	05624	192	75
NO3	99017	50	10
NO64-1IN	76381	BULK	
N25	73949	225	14
N4L2067-1		KITS	
N80P16018C6	03538	109	
N80P16018C6	03538	112	27
N80P16018C6	03538	115	
N80P16018C6	03538	116	
N80P16018C6	03538	119	
N80P16018C6	03538	129	
N80P16018C6	03538	205	6
N80P16018C6	03538	208	34
N80P16018C6	03538	209	
N80P16018C6	03538	KITS	
N80P16022C6	03538	15	45
N80P16022C6	03538	109	
N80P16022C6	03538	110	37A
N80P16022C6	03538	110	94
N80P16022C6	03538	115	
N80P16022C6	03538	116	
N80P16022C6	03538	117	
N80P16022C6	03538	119	
N80P16022C6	03538	129	
N80P16022C6	03538	220	
N80P16022C6	03538	265	11
N80P16022C6	03538	KITS	
N81P13030C13	03538	157	11
N81P13030C13	03538	158	12
N81P13040C13	03538	BULK	
N9030-1-4W0L	97539	176	4
N9030-1-4W0L	97539	177	3
PA784D161606	92003	213	52
PA784D161606	92003	220	51
PA834D060404	92003	178	21
PB2791-10	19315	165	66
PB2791-11	19315	165	66
PB2791-12	19315	165	66
PB2791-13	19315	165	66
PB2791-14	19315	165	66
PB2791-15	19315	165	66
PB2791-16	19315	165	66
PB2791-2	19315	165	66
PB2791-4	19315	165	66
PB2791-5	19315	165	66
PB2791-6	19315	165	66
PB2791-7	19315	165	66
PB2791-8	19315	165	66
PB2791-9	19315	165	66
PB31544-1	19315	68	54
PB31544-1	19315	68	56
PB31544-1	19315	183A	56
PB5	97557	265	67
PB5	97557	268	38
PB50237-1	19315	165	60
PC3 1-2	72794	182	
PC3 1-2	72794	183	20
PC3 1-2	72794	184	
PC3 1-2	72794	201	1
PC3 1-2	72794	201	100
PC3 1-2	72794	201	16
PC3 1-2	72794	201	26
PC3 1-2	72794	201	37
PC3 1-2	72794	201	44
PC3 1-2	72794	201	64
PC3 1-2	72794	201	78
PC3 1-2	72794	201	89
PC3 1-2	97896	202	24
PC3 1-2	72794	183A	30
PC31-2	72794	199	
PE16	23356	BULK	
PE20-25	23356	BULK	
PE3 1-2 38	72794	201	78
PF3 1-2 38	72794	182	
PF3 1-2 38	72794	183	21
PF3 1-2 38	72794	184	
PF3 1-2 38	72794	201	1
PF3 1-2 38	72794	201	100
PF3 1-2 38	72794	201	16
PF3 1-2 38	72794	201	37
PF3 1-2 38	72794	201	44
PF3 1-2 38	72794	201	53
PF3 1-2 38	72794	201	64
PF3 1-2 38	72794	201	89
PF3 1-2 38	72794	202	22
PF3 1-2 38	72794	183A	31
PF3 1-238	72794	201	26
PF31-238	72794	199	

REFERENCE NUMBER	MFG CODE	FIG NUMBER	ITEM NUMBER
PK44F2-3	45722	154	40
PLASTILUBEMOLY3	02307	MSUP	
PMF062L006A	62983	273	13
PM100	37362	F22	
PM501M1	00933	MSUP	
PO650-0.063X2.7INWX282INLG	03938	11A	23C
PPOOCE22-55S	77820	62	86
PROSEAL896	83527	MSUP	
PR2	08108	188	
PR2	08108	196	
PR2	08108	204	
PR2	08108	197A	5
PS1219-5	70255	30	19
PS1239	70255	30	36
PS1264-2	70255	30	16
PS1286-3	70255	30	18
PS3 1-2	72794	182	
PS3 1-2	72794	183	22
PS3 1-2	72794	184	
PS3 1-2	72794	201	1
PS3 1-2	72794	201	100
PS3 1-2	72794	201	16
PS3 1-2	72794	201	26
PS3 1-2	72794	201	37
PS3 1-2	72794	201	44
PS3 1-2	72794	201	53
PS3 1-2	72794	201	64
PS3 1-2	72794	201	78
PS3 1-2	72794	201	89
PS3 1-2	72794	202	23
PS3 1-2	72794	183A	32
PS31-2	72794	199	
PS410A	01281	202	31
PTB24-61PSW	77820	BULK	
PTOOCE16-26P	77820	BULK	
PTO8CE14-15S	77820	BULK	
PTOOCE10-6S	77820	204	
PTOOCE12-10S	77820	BULK	
PTOOCE14-19S	77820	204	
PTOOCE18-32S	77820	BULK	
PTOOCE20-16P	77820	BULK	
PTOOCE20-41P	77280	BULK	
PTOOCE20-41S	77820	BULK	
PTOOCE22-21S	77820	BULK	
PTOOCE22-55S	77820	BULK	
PTOOCE24-61P	77820	BULK	
PTOOCE8-4P	77820	BULK	
PT01CE12-10P	77820	BULK	
PT01CE8-4PSR	77820	BULK	
PT01P8-4PSR	77020	270	1
PT02E12-10P	77820	232	1
PT02E12-8P	77820	232	1
PT02E12-8P	77820	248	4
PT02E14-19PW	77820	183A	3
PT06CE10-6S	77820	BULK	
PT06CE12-10S	77820	BULK	
PT06CE12-3S	77820	BULK	
PT06CE12-8S	77820	BULK	
PT06CE14-15S	77820	BULK	
PT06CE14-19P	77820	BULK	
PT06CE14-19S	77820	BULK	
PT06CE14-19SSR	77820	BULK	
PT06CE16-23S	77820	BULK	
PT06CE16-26S	77820	BULK	
PT06CE16-26SW	77820	BULK	
PT06CE18-11S	77820	BULK	
PT06CE18-32P	77820	BULK	
PT06CE18-32S	77820	BULK	
PT06CE20-16S	77820	BULK	
PT06CE20-39PW	77820	BULK	
PT06CE20-39PY	77820	BULK	
PT06CE20-39PZ	77820	BULK	
PT06CE20-39S	77820	BULK	
PT06CE20-41P	77820	BULK	
PT06CE20-41S	77820	BULK	
PT06CE20-41SSR	77820	BULK	
PT06CE22-21P	77820	BULK	
PT06CE22-21S	77820	BULK	
PT06CE22-55P	77820	BULK	
PT06CE22-55S	77820	BULK	
PT06CE24-61P	77820	BULK	
PT06CE24-61PW	77820	BULK	
PT06CE24-61S	77820	BULK	
PT06CE8-2S	77820	BULK	
PT06CE8-2SW	77820	BULK	
PT06CE8-3S	77820	BULK	
PT06CE8-4PSR	77820	BULK	
PT06CE8-4S	77820	BULK	
PT06CE8-4SW	77820	BULK	
PT06CE8-45SR	77820	BULK	
PT06P14-18S	06848	BULK	
PT06P8-2SSR	77820	BULK	
PT06P8-4PSR	77820	BULK	
PT06P8-4SSR	77820	BULK	
PT07P8-4S	77820	BULK	
PT08CE14-18S	77820	BULK	
PT1H14-18P	77820	176	47
PW4005	73866	BULK	
PYLC39	05624	192	102
P1-148	73949	226	49
P1-149	73949	226	54
P102C10-0	82831	BULK	
P102C10-2	82831	15	
P102D10-1	82831	207	
P102F10-0	82831	BULK	
P102F31-0	82831	BULK	
P103F440-04	82831	191	
P104D10-2	82831	31	
P106F1032-04	82831	BULK	
P1074	98810	171	50
P11D5878	83843	215	56
P114418	95970	192	9
P15D7480	83843	215	61A
P166D10-1	82831	32	
P166F10-1	82831	32	
P18C3804-1	83843	215	58
P194	73949	225	16
P28B8801-72	83843	215	55
P28B9110	83843	215	62
P303-1	64560	262D	6
P304-1	64560	262D	1
P305	64560	262D	4
P306N	64560	262D	5
P307-1	64560	262D	2
P309N60PSI	64560	262	51
P309N60PSI	64560	262D	
P32B8351	83843	215	43
P4		KITS	
P4A	29666	BULK	
P6A	29666	BULK	
P66C983	88379	117	
P66C983	88379	129	
P8	21335	263	8A
P8	21335	264	16
QB71013-15	19315	A2	
QB71485-6	19315	A20	2
QB75603-1	19315	A23	2
QB75604-1	19315	A14	7

REFERENCE NUMBER	MFG CODE	FIG NUMBER	ITEM NUMBER
QB75618-1	19315	A1	
QB75619-1	19315	A1	1
QB75621-1	19315	A28	
QQS571	81348	BULK	
QQW470-080-10LBCL	81348	BULK	
Q11	07322	247	26
Q30-121	71984	MSUP	
Q690-11	99145	183	57
Q690-12	99145	183	49
Q690-12	99145	183	62
Q690-15	99145	183	59
Q690-19	99145	183	53
Q690-23	99145	183	36
Q690-25	99145	183	58
Q690-27	99145	183	18
Q690-32	99145	183	59
Q690-33	99145	183	58
Q690-34	99145	183	
Q690-35	99145	183	
Q690-5	99145	183	2A
Q690-6	99145	183	2
Q690-8	99145	183	9
Q690M2-3	99145	183	8
Q690M3-13	99145	183	33
Q690M5-12	99145	183	
Q76072-3	19315	MSUP	
Q8274	60399	230	53
Q8277	60380	125	27
RA11098	51663	212	5
RA11209	51663	212	7
RA11296	51663	212	4
RA11297-1	51663	212	3
RA11444-2	51663	212	15
RA15153	35351	215	5
RA15963	51663	215	22
RA15981	35351	215	16
RA22584	51663	215	
RA22585	51663	215	
RA22586	51663	215	
RA2500-4	01976	270	6
RA3M5	21335	245	22
RA4105	51663	215	2
RA4203	35351	215	2
RA7424	35351	215	14
RA7425	51663	215	15
RA7426	51663	215	10
RA7427	35351	215	13
RA9019	51663	215	29
RA9029	51663	215	30
RA9029	51663	215	36
RA9099	35351	215	20
RA9683	51663	215	34
RB11097-1	51663	212	6
RB11295-2	51663	212	
RB12038	51663	212	28
RB12203	51663	212	1
RB12484-1	51663	212	14
RB12484-2	51663	212	14
RB12484-3	51663	212	14
RB12484-4	51663	212	14
RB12484-5	51663	212	14
RB12484-6	51663	212	14
RB15154	51663	215	37A
RB15158	51663	215	7
RB15985	51663	215	11
RB16869	51663	215	18
RB21221-4	51663	212	31
RB21694	51663	212	33
RB21708-1	51663	212	19
RB21708-2	51663	212	19
RB21708-3	51663	212	19
RB21708-4	51663	212	19
RB21708-5	51663	212	19
RB21737	51663	212	20
RB21739	51663	212	21
RB7423	51663	215	4
RB7429	51663	215	2A
RB7640	31435	193	53
RB9024	51663	215	31
RB9239	51663	215	25
RB9483	51663	215	33
RB9484	35351	215	26
RB9486	51663	215	28
RB9542	51663	215	32
RCR07G512JS	81349	204A	153
RCR05G103JS	81349	189	26
RCR05G103JS	81349	189A	103
RCR05G103JS	81349	189A	69
RCR05G104JS	81349	189	20
RCR05G104JS	81349	189A	49
RCR05G104JS	81349	189A	97
RCR05G120JS	81349	189A	79
RCR05G123JS	81349	189A	105
RCR05G124JS	81349	189A	58
RCR05G152JS	81349	189	23
RCR05G152JS	81349	189A	108
RCR05G152JS	81349	189A	61
RCR05G156JS	81349	189A	71
RCR05G182JS	81349	189A	94
RCR05G183JS	81349	189A	100
RCR05G202JS	81349	189A	110
RCR05G202JS	81349	189A	74
RCR05G203JS	81349	189A	106
RCR05G203JS	81349	189A	59
RCR05G204JS	81349	189A	53
RCR05G221JS	81349	189A	90
RCR05G223JS	81349	189A	50
RCR05G245JS	81349	189A	78
RCR05G333JS	81349	189A	47
RCR05G333JS	81349	189A	66
RCR05G362JS	81349	189A	67
RCR05G364JS	81349	189A	98
RCR05G433JS	81349	189A	107
RCR05G475JS	81349	189A	99
RCR05G511JS	81349	189A	95
RCR05G512JS	81349	189	30
RCR05G513JS	81349	189	24
RCR05G682JS	81349	189	27
RCR05G684JS	81349	189A	60
RCR05G822JS	81349	189	29
RCR05G913JS	81349	189A	102
RCR07G100JS	81349	204A	54
RCR07G101JS	81349	194	116
RCR07G101JS	81349	194	179
RCR07G101JS	81349	194	84
RCR07G101JS	81349	204A	38
RCR07G102JS	81349	194	133
RCR07G102JS	81349	194	170
RCR07G102JS	81349	194	79
RCR07G102JS	81349	204A	150
RCR07G102JS	81349	204A	32
RCR07G103JS	81349	194	139
RCR07G103JS	81349	194	167
RCR07G103JS	81349	194	96
RCR07G103JS	81349	204A	154
RCR07G103JS	81349	204A	17
RCR07G103JS	81349	204A	18
RCR07G103JS	81349	204A	73
RCR07G104JS	81349	194	86
RCR07G104JS	81349	204A	17
RCR07G104JS	81349	204A	18
RCR07G104JS	81349	204A	72

REFERENCE NUMBER	MFG CODE	FIG NUMBER	ITEM NUMBER
RCR07G105JS	81349	204A	17
RCR07G105JS	81349	204A	18
RCR07G113JS	81349	204A	17
RCR07G113JS	81349	204A	18
RCR07G114JS	81349	204A	17
RCR07G114JS	81349	204A	18
RCR07G115JS	81349	204A	18
RCR07G122JS	81349	194	168
RCR07G123JS	81349	169	36
RCR07G123JS	81349	173	34
RCR07G123JS	81349	194	169
RCR07G123JS	81349	204A	17
RCR07G123JS	81349	204A	18
RCR07G124JS	81349	194	146
RCR07G124JS	81349	204A	17
RCR07G124JS	81349	204A	18
RCR07G125JS	81349	204A	18
RCR07G133JS	81349	204A	17
RCR07G133JS	81349	204A	18
RCR07G134JS	81349	204A	17
RCR07G134JS	81349	204A	18
RCR07G135JS	81349	204A	18
RCR07G151JS	81349	194	105
RCR07G151JS	81349	194	155
RCR07G152JS	81349	204A	55
RCR07G153JS	81349	204A	17
RCR07G153JS	81349	204A	18
RCR07G153JS	81349	204A	74
RCR07G154JS	81349	204A	17
RCR07G154JS	81349	204A	18
RCR07G155JS	81349	204A	18
RCR07G163JS	81349	204A	17
RCR07G163JS	81349	204A	18
RCR07G164JS	81349	204A	17
RCR07G164JS	81349	204A	18
RCR07G165JS	81349	204A	18
RCR07G182JS	81349	194	211
RCR07G183JS	81349	204A	17
RCR07G183JS	81349	204A	18
RCR07G183JS	81349	204A	88
RCR07G184JS	81349	204A	17
RCR07G184JS	81349	204A	18
RCR07G185JS	81349	204A	18
RCR07G202JS	81349	194	103
RCR07G202JS	81349	204A	151
RCR07G203JS	81349	204A	17
RCR07G203JS	81349	204A	18
RCR07G203JS	81349	204A	87
RCR07G204JS	81349	204A	17
RCR07G204JS	81349	204A	18
RCR07G205JS	81349	204A	18
RCR07G221JS	81349	194	121
RCR07G221JS	81349	194	85
RCR07G222JS	81349	194	126
RCR07G222JS	81349	194	172
RCR07G222JS	31435	194	204
RCR07G222JS	81349	194	76
RCR07G223JS	81349	177	34
RCR07G223JS	81349	204A	17
RCR07G223JS	81349	204A	18
RCR07G224JS	81349	204A	17
RCR07G224JS	81349	204A	18
RCR07G225JS	81349	169	34
RCR07G243JS	81349	204A	17
RCR07G243JS	81349	204A	18
RCR07G244JS	81349	204A	17
RCR07G244JS	81349	204A	18
RCR07G270JS	81349	169	41
RCR07G271JS	81349	194	151
RCR07G272JS	81349	194	207
RCR07G272JS	81349	194	98
RCR07G273JS	81349	169	43
RCR07G273JS	81349	194	176
RCR07G273JS	81349	204A	17
RCR07G273JS	81349	204A	18
RCR07G274JS	81349	204A	17
RCR07G274JS	81349	204A	18
RCR07G302JS	81349	204A	71
RCR07G303JS	81349	204A	152
RCR07G303JS	81349	204A	17
RCR07G303JS	81349	204A	18
RCR07G304JS	81349	204A	17
RCR07G304JS	81349	204A	18
RCR07G330JS	81349	173	40
RCR07G331JS	81349	173	30
RCR07G332JS	81349	169	39
RCR07G332JS	81349	173	38
RCR07G332JS	81349	194	122
RCR07G332JS	81349	194	165
RCR07G332JS	81349	194	203
RCR07G333JS	81349	204A	17
RCR07G333JS	81349	204A	18
RCR07G334JS	81349	204A	17
RCR07G334JS	81349	204A	18
RCR07G363JS	81349	204A	17
RCR07G363JS	81349	204A	18
RCR07G364JS	81349	204A	17
RCR07G364JS	81349	204A	18
RCR07G391JS	81349	194	111
RCR07G391JS	81349	204A	92
RCR07G392JS	81349	194	152
RCR07G392JS	81349	194	210
RCR07G393JS	81349	204A	17
RCR07G393JS	81349	204A	18
RCR07G394JS	81349	204A	17
RCR07G394JS	81349	204A	18
RCR07G432JS	81349	173	16
RCR07G433JS	81349	204A	17
RCR07G433JS	81349	204A	18
RCR07G434JS	81349	204A	17
RCR07G434JS	81349	204A	18
RCR07G470JS	81349	194	159
RCR07G470JS	81349	204A	66
RCR07G471JS	81349	194	180
RCR07G471JS	81349	204A	94
RCR07G472JS	81349	173	31
RCR07G472JS	81349	194	104
RCR07G472JS	81349	194	136
RCR07G472JS	81349	194	174
RCR07G472JS	81349	194	195
RCR07G472JS	81349	204A	18
RCR07G473JS	81349	194	163
RCR07G473JS	81349	204A	17
RCR07G473JS	81349	204A	18
RCR07G474JS	81349	204A	17
RCR07G474JS	81349	204A	18
RCR07G510JS	81349	194	149
RCR07G511JS	81349	204A	52
RCR07G512JS	81349	204A	18
RCR07G512JS	81349	204A	39
RCR07G513JS	81349	204A	17
RCR07G513JS	81349	204A	18
RCR07G514JS	81349	204A	17
RCR07G514JS	81349	204A	18
RCR07G561JS	81349	194	134
RCR07G561JS	81349	194	93
RCR07G562JS	81349	194	107
RCR07G562JS	81349	194	171
RCR07G562JS	81349	204A	18
RCR07G563J	81349	204A	18
RCR07G563JS	81349	204A	17
RCR07G564JS	81349	204A	17

REFERENCE NUMBER	MFG CODE	FIG NUMBER	ITEM NUMBER
RCR07G564JS	81349	204A	18
RCR07G621JS	81349	204A	95
RCR07G622JS	81349	204A	18
RCR07G623JS	81349	204A	17
RCR07G623JS	81349	204A	18
RCR07G624JS	81349	204A	17
RCR07G624JS	81349	204A	18
RCR07G682JS	81349	194	156
RCR07G682JS	81349	194	185
RCR07G682JS	81349	194	99
RCR07G682JS	81349	204A	18
RCR07G683JS	81349	204A	17
RCR07G683JS	81349	204A	18
RCR07G684JS	81349	204A	17
RCR07G684JS	81349	204A	18
RCR07G752JS	81349	204A	18
RCR07G753JS	81349	204A	17
RCR07G753JS	81349	204A	18
RCR07G754JS	81349	204A	17
RCR07G754JS	81349	204A	18
RCR07G821JS	81349	194	205
RCR07G822JS	81349	169	37
RCR07G822JS	81349	173	36
RCR07G822JS	81349	204A	18
RCR07G823JS	81349	204A	17
RCR07G823JS	81349	204A	18
RCR07G824JS	81349	204A	17
RCR07G824JS	81349	204A	18
RCR07G824JS	81349	204A	57
RCR07G912JS	81349	204A	18
RCR07G913JS	81349	204A	17
RCR07G913JS	81349	204A	18
RCR07G914JS	81349	204A	17
RCR07G914JS	81349	204A	18
RCR20C472JS	81349	BULK	
RCR20G100JS	81349	204A	35
RCR20G101JS	81349	192	39
RCR20G101JS	81349	192	57
RCR20G102JS	81349	177	31
RCR20G104JS	81349	BULK	
RCR20G152JS	81349	192	37
RCR20G152JS	81349	192	54
RCR20G153JS	81349	192	36
RCR20G161JS	81349	189	36
RCR20G203JS	81349	169	21
RCR20G204JS	81349	BULK	
RCR20G220JS	81349	176	29
RCR20G220JS	81349	177	39
RCR20G221JS	81349	186	18
RCR20G223JS	81349	277	26
RCR20G225JS	81349	BULK	
RCR20G302JS	81349	204A	155
RCR20G331JS	81349	192	41
RCR20G332JS	81349	177	41
RCR20G333JS	81349	173	20
RCR20G392JS	81349	192	44
RCR20G394JS	81349	177	40
RCR20G471JS	81349	192	43
RCR20G511JS	81349	189A	44
RCR32G116JS	81349	BULK	
RCR32G1215R	81349	BULK	
RCR32G122JS	81349	BULK	
RCR32G151JS	81349	277	
RCR32G182JS	81349	BULK	
RCR32G221JS	81349	277	
RCR32G221JS	81349	BULK	
RCR32G681JR	81349	200	18
RC05GF152J	81349	189A	108
RC05GF204J	81349	189A	52
RC07GF302JS	81349	194	101
RC104	08844	18	

REFERENCE NUMBER	MFG CODE	FIG NUMBER	ITEM NUMBER
RC104	08844	20	99
RC104	08844	11A	1
RC20GF103F	81349	186	19
RC30V	98810	157	51
RC30V	98810	158	46
RC42GF391J	81349	BULK	
RD12588	51663	212	13
RD21735	51663	212	23
RD21747	51663	212	18
REA048	83324	89	27A
REA048	83324	89	37
REA064	83324	76	142H
REB3N2	21335	234	1
RECTORSEAL15	77707	MSUP	
REPCON	50159	MSUP	
RE3M6A	21335	228	
RE65GR499	81349	204A	126
RE65G80R6	81349	184	
RE70G40R2	81349	210	96
RF4	77896	66	18
RF4	77896	66	9
RF4	77896	234	22
RF4	77896	234	48
RG114AU	81349	BULK	
RG12202-2	51663	212	8
RG15155E	35351	215	
RG15156-1	51663	215	37
RG15982	51663	215	12
RG21	79934	50	20
RG213U	81349	BULK	
RG21738	51663	212	32
RG21740	51663	212	
RG21743	51663	212	
RG21746	51663	212	29
RG51-02J6-19-10	72962	21	
RG59BU	81349	BULK	
RG62AU	81349	BULK	
RH25G3000	91637	8	
RK10-34	89616	MSUP	
RM48W	77896	224	5
RM52LHA4972-4-02	22599	10	
RM52LHA4972-8-02	72962	14	35
RM52LHA4972-8-02	72962	14	49
RNC55C4870FS	81349	204A	77
RNC55H1000FS	81349	204A	46
RNC55H1001FS	81349	204A	29
RNC55H1002FS	81349	204A	50
RNC55H1051FS	81349	204A	65
RNC55H1332FS	81349	204A	69
RNC55H1502FS	81349	204A	79
RNC55H1541FS	81349	204A	30
RNC55H1691FS	81349	204A	75
RNC55H2001FS	81349	204A	43
RNC55H2151FS	81349	204A	19
RNC55H2211FS	81349	204A	19
RNC55H2261FS	81349	204A	19
RNC55H2491FS	81349	204A	19
RNC55H2611FS	81349	204A	19
RNC55H2671FS	81349	204A	19
RNC55H2741FS	81349	204A	19
RNC55H2801FS	81349	204A	19
RNC55H2871FS	81349	204A	19
RNC55H3011FS	81349	204A	19
RNC55H3161FS	81349	204A	19
RNC55H3241FS	81349	204A	19
RNC55H3321FS	81349	204A	19
RNC55H3401FS	81349	204A	19
RNC55H3481FS	81349	204A	19
RNC55H3571FS	81349	204A	19
RNC55H3652FS	81349	204A	31
RNC55H3741FS	81349	204A	19

REFERENCE NUMBER	MFG CODE	FIG NUMBER	ITEM NUMBER
RNC55H3832FS	81349	189A	76
RNC55H3921FS	81349	204A	19
RNC55H3921FS	81349	204A	42
RNC55H4022FS	81349	204A	49
RNC55H4121FS	81349	204A	20
RNC55H4531FS	81349	204A	70
RNC55H4641FS	81349	204A	91
RNC55H4991FS	81349	204A	82
RNC55H4992FS	81349	204A	78
RNC55H5111FS	81349	204A	28
RNC55H5361FS	81349	204A	93
RNC55H6040FS	81349	204A	85
RNC55H6042FS	81349	204A	84
RNC55H7150FS	81349	204A	86
RNC55H75R0FS	81349	204A	96
RNC55H7502FS	81349	204A	47
RNC55H7872FS	81349	204A	81
RNC55H8061FS	81349	189A	51
RNC55H8251FS	81349	204A	51
RNC55H8661FS	81349	204A	64
RNC5542002FS	81349	204A	56
RNC60H1023FS	81349	189	38
RNC60H2001FS	81349	183A	22
RNC60H2943FS	81349	189	37
RNC60H3163FS	81349	189A	63
RNC60H3833FS	81349	189A	64
RN55C1000F	81349	204A	46
RN55C1051F	81349	204A	65
RN55C1332F	81349	204A	69
RN55C1502F	81349	204A	79
RN55C1541F	81349	204A	30
RN55C1691F	81349	204A	75
RN55C1822F	81349	204A	45
RN55C2001F	81349	204A	43
RN55C2002F	81349	204A	56
RN55C2151F	81349	204A	19
RN55C2211F	81349	204A	19
RN55C2261F	81349	204A	19
RN55C2321F	81349	204A	19
RN55C2371F	81349	204A	19
RN55C2431F	81349	204A	19
RN55C2491F	81349	204A	19
RN55C2551F	81349	204A	19
RN55C2611F	81349	204A	19
RN55C2741F	81349	204A	19
RN55C2801F	81349	204A	19
RN55C2871F	81349	204A	19
RN55C3011F	81349	204A	19
RN55C3012F	81349	204A	76
RN55C3091F	81349	204A	19
RN55C3161F	81349	204A	19
RN55C3241F	81349	204A	19
RN55C3321F	81349	204A	19
RN55C3401F	81349	204A	19
RN55C3481F	81349	204A	19
RN55C3651F	81349	204A	19
RN55C3652F	81349	204A	31
RN55C3741F	81349	204A	19
RN55C3831F	81349	204A	19
RN55C3832F	81349	189A	76
RN55C3921F	81349	204A	19
RN55C3921F	81349	204A	42
RN55C4021F	81349	204A	19
RN55C4022F	81349	204A	49
RN55C4121F	81349	204A	19
RN55C4531F	81349	204A	70
RN55C4870F	81349	204A	77
RN55C4991F	81349	204A	82
RN55C4992F	81349	204A	78
RN55C5111F	81349	204A	28
RN55C5361F	81349	204A	93
RN55C6040F	81349	204A	85
RN55C7150F	81349	204A	86
RN55C75R0F	81349	204A	96
RN55C7502F	81349	204A	47
RN55C7872F	81349	204A	81
RN55C8061F	81349	189A	51
RN55C8251F	81349	204A	51
RN55C8661F	81349	204A	64
RN60C1023F	81349	189	38
RN60C1213F	81349	189	32
RN60C1543F	81349	189A	64
RN60C1623F	81349	189A	63
RN60C2001F	81349	183A	22
RN60C2373F	81349	189A	64
RN60C2943F	81349	189	37
RN60C3163F	81349	189A	62
RN60C4993F	81349	189A	64
RN60C8252F	81349	189A	64
RN65C9313F	81349	189A	53
RN70C4320F	81349	204A	62
RN70C5360F	81349	204A	89
RP67-0101-1	98284	228	93
RRN200	80756	88	48B
RRT218	80756	83	82
RRT218	80756	83	89
RRT244	80756	83	79
RRT256	80756	81	193
RRT450	80756	76	152
RRT450	80756	76	92
RRT525	80756	88	83
RRT537	80756	76	167
RRT650	80756	76	72
RR131	80756	138	64
RR150	80756	63	114
RR185C		KITS	
RR218	80756	89	62
RR262S	80756	88	65B
RR262S	80756	89	70
RR306C	80756	76	135B
RR306C	80756	76	60B
RR343S	80756	76	63A
RR343S	80756	88	39
RR343S	80756	89	51
RR350C	80756	89	7
RR443	80756	83	335
RR487S	80756	81	84B
RR487S	80756	83	215
RR50	80756	63	26
RR50	80756	67	17
RR612	80756	88	46
RR62	80756	63	22
RR62	80756	78	3
RR75	80756	67	5
RR75	80756	265	306
RR75	80756	268	267
RR93S	80756	KITS	
RS16903-57	51663	212	22
RS2C450	35005	184	32
RS2X000C350R0F	35005	184	30
RS66	80756	265	52
RS66	80756	268	6
RS69	32834	MSUP	
RS75C	80756	265	258
RS75C	80756	268	190
RS78	80756	265	89
RS78	80756	268	25
RS98	80756	265	277
RS98	80756	268	236
RTV108	01139	MSUP	
RTV3145	71984	MSUP	
RT10C2L501	81349	184	43

REFERENCE NUMBER	MFG CODE	FIG NUMBER	ITEM NUMBER
RT10C2L501M	80294	184	40
RT12C2P502	81349	194	78
RT494APX44	65597	277	3
RU70U3240F	81349	68	6
RV200-5-1	98996	BULK	
RWP18F6040F	81349	68	6
RW20V101	44665	196	36
RW35V220	44655	188	48
RW56V432	81349	204	
RW69V301	81349	184	31
RW70U10R2F	81349	68	6
RW70U1000F	81349	68	6
RW70U1001F	81349	194	186
RW70U1050F	81349	68	6
RW70U1100F	81349	68	6
RW70U1150F	81349	68	6
RW70U1180F	81349	68	6
RW70U1210F	81349	68	6
RW70U1240F	81349	68	6
RW70U1270F	81349	68	6
RW70U1300F	81349	68	6
RW70U1330F	81349	68	6
RW70U1370F	81349	68	6
RW70U1400F	81349	68	6
RW70U1430F	81349	68	6
RW70U1470F	81349	68	6
RW70U15R4F	81349	68	6
RW70U1500F	81349	68	6
RW70U1540F	81349	68	6
RW70U1580F	81349	68	6
RW70U1620F	81349	68	6
RW70U1650F	81349	68	6
RW70U1690F	81349	68	6
RW70U1740F	81349	68	6
RW70U1780F	81349	68	6
RW70U1820F	81349	68	6
RW70U1870F	81349	68	6
RW70U1910F	81349	68	6
RW70U1960F	81349	68	6
RW70U20R5F	81349	68	6
RW70U2000F	81349	68	6
RW70U2050F	81349	68	6
RW70U2100F	81349	68	6
RW70U2150F	81349	68	6
RW70U2210F	81349	68	6
RW70U2260F	81349	68	6
RW70U2320F	81349	68	6
RW70U2370F	81349	68	6
RW70U2430F	81349	68	6
RW70U2490F	81349	68	6
RW70U25R5F	81349	68	6
RW70U2550F	81349	68	6
RW70U2610F	81349	68	6
RW70U2670F	81349	68	6
RW70U2740F	81349	68	6
RW70U2800F	81349	68	6
RW70U2870F	81349	68	6
RW70U2940F	81349	68	6
RW70U30R9F	81349	68	6
RW70U3010F	81349	68	6
RW70U3090F	81349	68	6
RW70U3160F	81349	68	6
RW70U3320F	81349	68	6
RW70U3400F	81349	68	6
RW70U3480F	81349	68	6
RW70U35R7F	81349	68	6
RW70U3570F	81349	68	6
RW70U3650F	81349	68	6
RW70U3740D	81349	68	6
RW70U3830D	81349	68	6
RW70U3920D	81349	68	6
RW70U3980F	81349	68	6
RW70U40R2F	81349	68	6
RW70U4020D	81349	68	6
RW70U4050D	81349	68	6
RW70U4080D	81349	68	6
RW70U4120D	81349	68	6
RW70U4150D	81349	68	6
RW70U4180D	81349	68	6
RW70U4220D	81349	68	6
RW70U4320D	81349	68	6
RW70U4350D	81349	68	6
RW70U4380D	81349	68	6
RW70U4420D	81349	68	6
RW70U45R3F	81349	68	6
RW70U4500D	81349	68	6
RW70U4530D	81349	68	6
RW70U4570D	81349	68	6
RW70U4610D	81349	68	6
RW70U4640D	81349	68	6
RW70U4680D	81349	68	6
RW70U4720D	81349	68	6
RW70U4750D	81349	68	6
RW70U4790D	81349	68	6
RW70U4830D	81349	68	6
RW70U4870D	81349	68	6
RW70U49R9F	81349	68	6
RW70U4910D	81349	68	6
RW70U4950D	81349	68	6
RW70U4990D	81349	68	6
RW70U5110D	81349	68	6
RW70U5230D	81349	68	6
RW70U5360D	81349	68	6
RW70U54R9F	81349	68	6
RW70U5490D	81349	68	6
RW70U5570D	81349	68	6
RW70U5620D	81349	68	6
RW70U5680D	81349	68	6
RW70U5720D	81349	68	6
RW70U5760D	81349	68	6
RW70U60R4F	81349	68	6
RW70U6190F	81349	68	6
RW70U6290F	81349	68	6
RW70U64R9F	81349	68	6
RW70U6490F	81349	68	6
RW70U6650F	81349	68	6
RW70U69R8F	81349	68	6
RW70U75R0F	81349	68	6
RW70U80R6F	81349	68	6
RW70U84R5F	81349	68	6
RW70U90R9F	81349	68	6
RW70U95R3F	81349	68	6
RW79U4R99F	81349	193	11
RX22	55719	BULK	
RX35V101	81349	188	37A
RX35V101	81349	188	37B
RX35V101	81349	188	37C
RX35V510	81349	188	48
R0125LD5	43991	265	289
R0125LD5	43991	268	251
R1021ARN30D	00781	278	5
R1912P	38443	88	73
R23100-5	50599	BULK	
R23100-5	50599	KITS	
R3FFM	38443	233	28
R300-1-1-2	73842	BULK	
R300-3-8	73842	BULK	
R300216-13	29666	32	
R3007T10-10	29666	BULK	
R3007T6-8	11815	BULK	
R3452	70951	252	1
R3454	70951	252	16

REFERENCE NUMBER	MFG CODE	FIG NUMBER	ITEM NUMBER
R4	92830	190A	
R4FFMST	38443	233	2
R4G	71286	18	149C
R4G	71286	31	13B
R4X1E	43334	230	63
R836ARN59	00781	278	11
SB327ARC44		182	19
SB329AR	80058	182	13
SCD28053-1	80063	BULK	
SCD86348-1	80063	BULK	
SCOTCHWELD2216BA	94960	MSUP	
SC1541	00624	MSUP	
SC4-2	72794	196	
SFA45-1	73949	205	40
SFR1665PPK25/74	83086	190A	35
SFR2-65PPK25/74	83086	190A	27
SFR45PPK25/74	83086	190A	19
SF91-10SA7A	78286	BULK	
SK15241-10	40912	263	25B
SK15241-12	40912	263	25D
SK15241-14	40912	263	25C
SK15241-15	40912	A10	
SK15241-21	40912	A10	
SK15241-9	40912	263	25A
SLZ9084	10639	157	51
SLZ9084	10639	158	46
SLZ9125	10639	157	51
SLZ9125	10639	158	46
SLZ9125A	10639	157	51
SLZ9125A	10639	158	46
SL71-30-36	97393	73	44L
SMB183153	80063	63	2
SMB183153	80063	138	15
SM8183153	80063	138	23
SM8183153	80063	274	30
SP02SE16-23P	77820	184	36
SP07E14-15P	07038	45	
SP1069-1	96603	36	11C
SP2505-1	96603	25	32
SP4038	96603	F3	6
SP4067	96603	F4	3
SRG792	91488	MSUP	
SRW430L	83324	190A	47
SR110L	83324	265	235
SR110L	83324	265	28
SR110L	83324	268	72
SR142	83324	265	267
SR142	83324	268	172C
SR142L	83324	45	
SR168S3G2	70854	184	19
SR192L	83324	265	96
SR192L	83324	268	48
SR192L	83324	268	51
SR258L	83324	265	268
SR258L	83324	265	97
SR258L	83324	268	12A
SR258L	83324	268	172D
SR45PPDK25/74	83086	190A	15A
SR8SS2G21	70845	190A	36
SSRS77R4XR5CT		KITS	
SSRS77034XR5CT		KITS	
SS3121X	91587	134	3
SS48166RK2220	61864	10	
SS51045	61864	BULK	
SS773L00X1E	43334	247	24
STD3017E6		KITS	
STD3017E8	91547	KITS	
STD3023K2	91547	62	54
STD3023K2	91547	QC1	16
STD3023K2	91547	KITS	
STD3057-2	91547	BULK	
STH5019-3-8	08075	BULK	
STYLEEP15-0-0073X46X400YD	32617	BULK	
ST300-3	70134	179	15
ST300-3	70134	179	31
ST7A	61349	117	77
ST7A	61349	129	137
ST7A	61349	129	56
ST7B	61349	117	77
ST7B	61349	129	137
ST7B	61349	129	56
ST7D	61349	117	77
ST7D	61349	129	137
ST7D	61349	129	56
SURJEX	95510	MSUP	
SWAL1615-03MZ	19315	228	127E
SWE101	87641	A32	
SW87	73949	225	10
SYLC213	05624	232	33
SYLC219	05624	232	34
SYLC224-1	05624	232	28
SYLC228	05624	232	12
SYLC233-2	05624	232	9
SYLC234-1	05624	232	9
SYLC235	05624	232	21
SYLC236	05624	232	37
SYLC239	05624	232	38
SYLC241	05624	232	3
SYLC242-1	05624	232	7
SYLC266	05624	232	49
SYLC268	05624	232	46
SYLC270	05624	232	42
SYLC271	05624	232	41
SYLC272	05624	232	47
SYLC302	05624	232	29
SYLC304-3	05624	232	24
SYLC305-2	05624	232	24
SYLC305-3	05624	232	24
SYLC595-10	05624	228	23A
SYLZ152	05624	192	
SYLZ153	05624	192	52
SYLZ181	05624	192	
SYLZ274	05624	192	60
SYLZ49-1	05624	192	32
SYLZ50-1	05624	192	
SYLZ7561-2	05624	191	10
SYLZ7561-2	05624	191	42
SYLZ7561-2	05624	192	
SYLZ7561-2	05624	195	23
SYLZ7561-2	05624	195	47
SYLZ7561-3	05624	191	10
SYLZ7561-3	05624	191	42
SYLZ7561-3	05624	192	
SYLZ7561-3	05624	195	23
SYLZ7561-3	05624	195	47
SYLZ76	05624	192	
SYLZ79	05624	192	7
SYLZ80	05624	192	19
SYLZ82	05624	192	
SYLZ82-1	05624	192	
SYLZ83	05624	192	3A
S1-008A	99643	150A	12
S1-011A	99643	150A	24
S1-011A	99643	150A	8
S1-020A	99643	150A	15
S1-022A	99643	150A	16
S1KDD7	21335	268	211
S10	43334	50	18
S10-1562	99643	150A	10
S1006-28GMKIT	08795	MSUP	
S101B10		KITS	
S101B22		KITS	

REFERENCE NUMBER	MFG CODE	FIG NUMBER	ITEM NUMBER
S10188		KITS	
S102	55933	197A	6
S102D10-04	82831	207	
S102D10-08	82831	10	9A
S102D10-10	82831	15	
S102F10-10	82831	15	
S103D4-1	82831	191	
S104D1032-12	82831	31	
S107F	98675	275	
S11052-16-5P	97820	102	21
S11052-16-5P	97820	103	19
S11052-16-5Q	97820	102	12
S11052-16-5Q	97820	103	14
S11052-27-5Q	97820	102	54
S11052-27-5Q	97820	103	47
S11065-13T	97820	137	14
S11065-15-5	97820	102	45
S11065-15-5	97820	103	38
S112A3	96487	214	4
S112A3		KITS	
S11717-115-5	97820	102	58
S11717-116-5	97820	102	58
S11717-116-5	97820	103	51
S11717-129		KITS	
S11717-129	09257	49	7
S11717-220-5	97820	102	50
S11717-220-5	97820	103	43
S11717-233		49	13
S11717-233		KITS	
S12066-010	09257	79	44
S12066-010	09257	96	26
S1224	12511	190A	15
S12562-218	97820	74	39
S12684-006	09257	79	48
S12684-006	09257	96	28
S12684-012	09257	79	36
S12684-012	09257	96	19
S12684-016	09257	79	34
S12684-016	09257	96	17
S136	97484	139	538
S1607-7021	78286	MSUP	
S166D1032-10	82831	32	
S210-1	36536	182	
S230-1	75376	BULK	
S230-1	89305	182	
S234-3-510A	99057	76	32
S234-3-510A	99057	87	29
S234-3-511A	99057	81	119
S234-3-57A	99057	83	134
S234-3-57A	99057	87	28
S234-3-58A	99057	87	26
S234-3-59A	99057	76	49
S234-3-59A	99057	80	19A
S234-3-59A	99057	81	205
S234-3-59A	99057	83	359
S234-3-59A	99057	87	32
S234-3-59A	99057	88	97
S234-3-69A	99057	81	204
S234S3-59A	99057	83	177
S243-3-615A	99057	80	21
S245-3-610A	99057	80	7A
S245-3-610A	99057	81	65
S245-3-610A	99057	83	139
S245-3-610A	99057	83	305
S245-3-611A	99057	81	203
S245-3-611A	99057	83	101
S245-3-611A	99057	83	207
S245-3-612A	99057	83	100
S245-3-612A	99057	83	358
S245-3-612A	99057	83	99
S245-3-612A	99057	88	32
S245-3-612A	99057	91	12
S245-3-613A	99057	81	200
S245-3-613A	99057	88	60
S245-3-614A	99057	83	175
S245-3-615A	99057	80	18A
S245-3-615A	99057	81	121
S245-3-615A	99057	81	201
S245-3-616A	99057	88	93
S245-3-617A	99057	81	202
S245-3-618A	99057	88	89
S245-3-67A	99057	76	58
S245-3-67A	99057	88	100
S245-3-68A	99057	81	80A
S245-3-68A	99057	83	176
S245-3-69A	99057	76	140
S245-3-69A	99057	83	174
S246-3-1106A	99057	83	256
S246A2-3-1012A	99057	92	28
S246A2-3-1012A	99057	92	82
S246A2-3-1114A	99057	83	257
S246A2S3-1012A	99057	81	59A
S256-3-611A	99057	76	31
S256-3-712	99057	71	17
S256-3-713A	99057	80	6A
S256-3-714A	99057	83	208
S256-3-715A	99057	80	17A
S256-3-715A	99057	83	351
S256-3-715A	99057	83	361
S256-3-715A	99057	83	98
S256-3-716A	99057	76	50
S256-3-717A	99057	76	31A
S256-3-717A	99057	83	357
S256-3-719A	99057	76	31B
S256-3-720A	99057	87	27A
S256S3-715A	99057	87	31
S256S3-716A	99057	83	354
S256S3-717A	99057	80	20
S267-3-816A	99057	87	30A
S267-3-820A	99057	81	206
S267S3-819A	99057	83	355
S3-10-10A		130	12
S3-10-10A		KITS	
S3-10-6A	99643	272	7
S3-10-6A		KITS	
S3-150	72794	34	
S3-150	72794	183	31
S3-175	72794	182	
S3-175	72794	209	
S3-8-10A		122	11
S3-8-10A		122	31
S3-8-10A		KITS	
S335-3-610A	99057	87	29
S335-3-611A	99057	81	119
S335-3-67A	99057	83	134
S335-3-67A	99057	87	28
S335-3-68A	99057	87	26
S335-3-69A	99057	83	
S335-3-69A	99057	83	177
S346-3-710A	99057	81	65
S346-3-710A	99057	83	305
S346-3-713A	99057	81	200
S346-3-714A	99057	83	175
S346-3-715A	99057	81	121
S346-3-715A	99057	81	201
S346-3-78A	99057	83	176
S346-3-79A	99057	81	204
S346-3-79A	99057	83	
S357-3-814A	99057	83	208
S357-3-815A	99057	80	17A
S357-3-815A	99057	83	
S357-3-815A	99057	83	98

REFERENCE NUMBER	MFG CODE	FIG NUMBER	ITEM NUMBER
S357-3-816A	99057	76	50
S357-3-816A	99057	83	
S357-3-817A	99057	83	
S357-3-819A	99057	76	31B
S357-3-820A	99057	87	27A
S368-3-919A	99057	83	
S4-40-3-4LG	97539	176	3
S4-40-3-4LG	97539	177	2
S4055-2TON	75535	263	4
S4411	12511	190A	3
S4461	12511	190A	42
S5A225	72794	11A	16C
S53	97484	71	22
S53	97484	71	85
S53	97484	75	87
S53	97484	108	4
S54	97484	71	9
S7014	12511	190A	11
S7519	12511	190A	17
S8KD	21335	26	15
S802-10D	75376	36	24
S8157C125-06A	70210	20	73
S83P	97484	26	12
S85PA	97484	139	53B
S859	12511	190A	43
S8806	12511	190A	38
S89	97484	72	86
S89	97484	74	19
S9003	12511	190A	7
S9565	12511	190A	44
S9566	12511	190A	37
TA96713	40912	263	26B
TC4003CRN	08795	68	16
TDS04-9-8	81982	A55	
TES6429	62983	A55	
TES6479	62983	A55	
TES6917	62983	A30	8
TES7734	62983	A30	4
TES7736	62983	A47	4
TES7785	62982	A28	4
TES7830	62983	A48	6
TE55-6-25	14170	BULK	
TMRX10	55719	A10	
TM47	99180	209	33
TQ7033	82768	182	31
TQ7033	82768	200	21
TRC1220	78784	26	4
TRD2435	78784	26	26
TR716-02	73842	50	19
TR716-03	73842	50	
TS1W103J	02985	193	24
TS10087	91929	183	13
TS3W502J	31435	193	26
TT036	83003	169	33
TT036	83003	173	29
TUGON74S	72009	MSUP	
TW6D26T	02640	189	4
TYPE 1 1-16X5-8	73957	231	98
T104760	62983	A53	5
T105679	62983	A29	8
T107-3	08844	34	65
T108683	62983	A12	3
T108684	62983	A12	3
T1230	93712	A4	8
T123173	62983	A45	
T1233-2	93713	A54	4
T1236	93712	A4	9
T162359	62983	A45	7
T164177	62983	A39	7
T170	01014	F23	
T180570	62983	A40	4
T186078	62983	A11	7
T186820	62983	A4	1
T1900	93712	A54	5
T191819	62983	A31	1
T198444	62983	A27	1
T198639	62983	A16	4
T2	33525	34	11
T2	33525	34	12
T2	33525	34	58
T205318	62983	A16	6
T210296	62983	A14	8
T210297	62983	A43	
T215572	77272	A12	3
T216073	62983	A8	1
T216079	62983	A53	4
T216411	62983	A42	4
T222655	62983	A3	2
T222801	62983	A12	8
T228563	62983	A29	8
T230339	62983	A12	3
T232050	62983	A54	
T232052	62983	A53	1
T232245	62983	A25	2
T232286	62983	A26	1
T232843	62983	A12	3
T232863	62983	A41	2
T232865	62983	A40	7
T233046	62983	A54	2
T233047	62983	A54	6
T233248	62983	A2	5
T233281	62983	A8	2
T236152	62983	A32	3
T237014	62983	A23	5
T237121	62983	A30	7
T237122	62983	A30	9
T237776	62983	A31	7
T237778	62983	A38	1
T238704	62983	A29	3
T238705	62983	A46	3
T238708	62983	A47	2
T240221	62983	A53	3
T242963	62983	A29	4
T243015	62983	A55	
T243172	62983	A54	7
T243379	62983	A8	3
T246396	62983	A31	8
T246942	62983	A50	2
T246990	62983	A54	1
T246992	62983	A31	9
T246993	62983	A31	9
T271-13	99145	203	20
T271-14	99145	203	37
T271-15	99145	203	16
T271-16	99145	203	17
T271-19	99145	203	8
T271-2	99145	203	3
T271-3	99145	203	1A
T271-32	99145	203	18
T271-9	99145	203	36
T300006	62983	A29	5
T300054	62983	A41	2
T300055	62983	A28	3
T300317	62983	A53	2
T300325	62983	A48	2
T300327	62983	A37	3
T300328	62983	A37	3
T300329	62983	A34	4
T300331	62983	A47	6
T300332	62983	A47	5
T300561	62983	A32	6
T300564	62983	A55	

REFERENCE NUMBER	MFG CODE	FIG NUMBER	ITEM NUMBER
T400981	62983	A39	1
T400982	62983	A12	3
T400983	62983	A12	3
T402361	62983	A55	
T413373	62983	A55	
T7334	93712	A16	7
T7669-2	93712	A6	8
T7669-3	93712	A6	8
T77202MILG3278A	60380	252	12
T7828	93712	A55	
UG291DU	80058	BULK	
UG563BU	80056	BULK	
UG710CU	81349	BULK	
UL11037-1QT	47695	MSUP	
UR101F	74545	198	19
UR101F	74545	204	
UR101F	74545	204	31
UR101F	74545	209	17
US104	73949	225	8
US218	73949	225	17
VS10106H10-56	77272	83	191
VS10107-1	77272	BULK	
VS10203-1	77272	BULK	
VS10203-2	77272	40	
VS10203-3	77272	40	
VS10203-4	77272	40	
VS15102-20-146	77272	11C	44A
VS15102-8-50	77272	BULK	
VS15202-36-1	77272	239	181
VS15305-3020-14	77272	BULK	
VS15305-3032-15	77272	11B	79
VS15305-3032-15	77272	KITS	
VS15305-5026-11	77272	15	43
VS15305-6020-11	77272	138	11
VS15305-6020-11	77272	228	29A
VS15305-6020-11	77272	228	38
VS15305-6020-11	77272	KITS	
VS15305-6020-8	77272	273	31
VS15305-6032-15	77272	11B	79
VS15305-6032-15	77272	KITS	
VS15305-6039-18	77272	239	40
VS15305-6039-18	77272	239	74
VS15305-6039-18	77272	KITS	
VS15305C3032-12	77272	14	28
VS15305C6020-14	77272	62	
VS15305C6020-14	77272	62	51
VS15305C6020-14	77272	QC1	154
VS15305C6020-16	77272	62	
VS15305D1045-10	77272	20	
VS15305D3095-28	77272	72	6
VS15305D3095-28	77272	KITS	
VS15306-10	77272	BULK	
VS15307-1	77272	20	74
VS15307-1	77272	28	
VS15307-1	77272	28	
VS15307-1	77272	28	
VS15307-1	77272	KITS	
VS15404-16	77272	213	55
VS15404-16	77272	220	
VS20101-1-4	77272	BULK	
VS20101-2-4	77272	BULK	
VS20106-1	77272	BULK	
VS20301-2	77272	18	121
VS20301-2	77272	18	128
VS20301-2	77272	18	137
VS20301-2	77272	18	14
VS20301-2	77272	18	144
VS20301-2	77272	18	151
VS20301-2	77272	18	160
VS20301-2	77272	18	4
VS20301-2	77272	KITS	

REFERENCE NUMBER	MFG CODE	FIG NUMBER	ITEM NUMBER
VS20302-2	77272	BULK	
VS20302-3	77272	18	
VS20302-3	77272	18	164
VS20302-3	77272	32	
VS25112-4	77272	76	
VS25112-4	77272	81	129
VS25112-4	77272	83	374
VS25112-4	77272	89	130
VS25201-019-1164	81205	32	
VS25201-019-1289	77272	32	
VS25201-019-3412	77272	32	
VS25201-019-4162	77272	32	
VS25201-025-1340	81205	32	
VS25201-030-1935	77272	15	49
VS25201-030-2560	77272	15	51
VS25201-044-1712	77272	32	
VS25201-055-4360	81205	32	
VS25201-100-1280	77272	32	
VS25201-100-2730	77272	32	
VS40702-1	77272	90	15A
VS40702-1	77272	92	37C
VS40702-1	77272	92	91C
VS40702-2	77272	90	158
VS40702-2	77272	92	37E
VS40702-2	77272	92	91E
VS5216	55719	F1	28
VS5218	55719	F1	29
VS5220	55719	F1	30
VS5222	55719	F1	31
VS5226	55719	F1	32
VS5228	55719	F1	33
VS80502-1	77272	BULK	
VS80514	77272	BULK	
VS80518-1	77272	BULK	
VS80526	77272	BULK	
VS80536-1	77272	BULK	
VS80537-1	77272	BULK	
VS80540-1	77272	BULK	
VS80541-1	81205	BULK	
VS80542-038-2325	81205	32	
VS80542-040-6750	77272	32	5
VS80542N100-7200	77272	BULK	
VS80543	77272	BULK	
VS80544-1	77272	BULK	
VS80545-1	77272	BULK	
VS80546-1	77272	BULK	
VS80549-1	77272	BULK	
VS80550-1	77272	BULK	
VS80550-2	77272	BULK	
VS80551-1	77272	BULK	
VS80567-1	77272	18	13
VS80567-1	77272	BULK	
VS80567-3	77272	BULK	
VS80567-7	77272	BULK	
VS80568	77272	BULK	
VS80570-2	77272	16	
VS80570-2	77272	21	
VS80570-2	77272	BULK	
VS80803-750	81205	115	49
VS85072-1	77272	BULK	
VS90531MAGK60AT5-12FTLG	77272	21	
V3400-02	96487	213	40
V3400-02	96487	220	40
V3400-02	96487	221	4
V36111	96487	214	19
V36111		KITS	
V36118	96487	214	13
V36118		KITS	
V36120	96487	214	8
V36121	96487	214	11
V36121		KITS	

REFERENCE NUMBER	MFG CODE	FIG NUMBER	ITEM NUMBER
V36124	96487	214	17
V36124		KITS	
V36125	96487	214	15
V36125		KITS	
V36126	96487	214	14
V36126		KITS	
V36127	96487	214	3
V36127		KITS	
V36128	96487	214	18
V36128		KITS	
V36129-1	96487	214	
V36129-2	96487	214	
V36129-3	96487	214	
V36129-4	96487	214	
V36129-5	96487	214	
V36129-6	96487	214	
V36129-7	96487	214	
V36129-8	96487	214	
V36129-9	96487	214	
V36190	96487	214	
V36190	96487	KITS	
V36192	96487	214	
V36192	96487	KITS	
V76-910	89944	170	93
V76-910	89944	171	67
WA1273-3	93697	BULK	
WA750-4	79318	67A	71
WB312-4	76689	BULK	
WB312-7	76689	BULK	
WD40	09137	MSUP	
WP200-8	76689	BULK	
WP260-3	98524	BULK	
WP260-6	76689	BULK	
WSI332-7	04169	178	115
WSI4-5-5	04169	BULK	
WS1312-10	04169	BULK	
WS1312-2-5	04169	BULK	
WS1312-5	04169	BULK	
WS132-40	04169	BULK	
WS132-5	04169	BULK	
WS1332-25	04169	BULK	
WS1332-6	04169	BULK	
WS30	07015	A55	
WS491	80738	MSUP	
W1332-23	04169	BULK	
W17379	70255	30	12
W17392	70255	30	34
W20048-12	70255	30	8
W20136	70255	30	11
W20150	70255	29	
W20166-8	70255	29	
W20166-9	70255	29	
W20168	70255	29	
W20169	70255	29	
W20388	70255	30	4
W20538-50	04276	200	14
W33-7510-4	98429	157	45
W33-7510L	98429	157	45
W79B22X8-4X		KITS	
W79C22X8-4X		KITS	
W79D26X4-0X		216	30
W79D26X4-0X		KITS	
W79J26X4-0X		216	31
W79J26X4-0X		KITS	
W79K22X8-4X		KITS	
XA162536	96881	42A	31
XA162536	96881	42B	86
XA162536	96881	42C	32
XA81420	96881	42B	74
XW17380-4	70255	30	20
XW17386	70255	30	31
XW20067-780	70255	29	5
XW20119	70255	30	5
XW20128-1	70255	30	9
XW20128-2	70255	30	7
XW20128-3	70255	30	6
XW20173-2	70255	29	6
XW20173-2	70255	30	
XW20175	70255	30	35
XW20336-2	70255	201	6
XW20345-369-50	70255	29	3
XW20442	70255	30	23
XW20751-1-1800-1	70255	29	2
XW20973H18	70255	29	
XW20973S18	70255	29	
XW21110H18	70255	29	1
XW21110S18	70255	29	1
XX78323K1105	61864	BULK	
X1006	73949	226	56
X1009	73949	226	48
X12109	90484	182	
X133646REVD	99186	89	114
X200-1	72794	18	
X30	89944	170	18
X30	89944	171	20
X322	61463	BULK	
X5101-50-1	89944	170	57
X5101-50-1	89944	170	92
X64F1877-1	81996	36	1
X649	73949	225	18
X702-382A	75477	93	1
X702-382A	75477	94	
X702-382B	75477	93	1
X702-382B	75477	94	
X767G	73949	225	28
X862G	73949	225	26
X862H	73949	225	29
X967-2	73949	225	24
X995-1	73949	225	20
YAEV6CRS1	09922	BULK	
YAV4CRS3	09922	BULK	
Y9132B1-83-436YD	76381	BULK	
ZZMW1012-16S	49367	204	
ZZMW2112	49367	204	
Z1200-048	72962	62	
0-3521		KITS	
0-3521	89513	2628	3
0-3525		KITS	
0-3525	89513	2628	7
0-415-537	19315	165	12
0-5599	75511	2628	14
0-7408		KITS	
0-7408	89513	2628	1
OCKLOP6D	29666	BULK	
OCKLOP6E	29666	BULK	
OCKLOP6H	29666	BULK	
OCKLOP6J	29666	BULK	
OCKLOP6K	29666	BULK	
OCKLOP6N	29666	BULK	
OMP2693-5	86020	117	70
OMP2693-5	86020	129	151
OP262	81872	207	5
OP262	81872	208	1
OT440P164	00736	83	21E
000601003H0176	00624	81	6A
006-11646	86579	247	11
01-002-0500	09455	21	
01FGP135	00736	79	15
01S556P211	00736	83	21F
01S667P135	00736	79	13
01S932-205	00736	79	16
01W157-105	00736	79	3

REFERENCE NUMBER	MFG CODE	FIG NUMBER	ITEM NUMBER
01W157-110	00736	79	23
01W157-140	00736	79	25
01W157-164	00736	79	2
01W157-173	00736	79	24
01W157-213	00736	79	20
01W157-214	00736	79	22
01W157-218	00736	79	17
01W157-231	00736	79	11
01W157-235	00736	79	6
01W157-242	00736	79	1
01W716-110	77272	79	7
01W716-113	00736	79	9
01W716-114	00736	79	8
010-11646	86579	247	2
010-8306	86579	197A	14
0101205-01		KITS	
0101208-01		KITS	
0101208-02		KITS	
0101208-03		KITS	
0101208-04		KITS	
0101212		KITS	
0101216		KITS	
0101217		KITS	
0101218		KITS	
0101219		KITS	
0101223		KITS	
0101224		KITS	
0101225		KITS	
0101226		KITS	
0101229		KITS	
0101231		KITS	
0101238-01		KITS	
0101238-01	45402	37	34
0101238-01	45402	37A	32
0101242-01		KITS	
0101242-02		KITS	
0101242-03		KITS	
0101242-04		KITS	
0101243		KITS	
0101258		KITS	
0101267		KITS	
0101268		KITS	
0101270		KITS	
0101274-01		KITS	
0101274-02		KITS	
0101274-03		KITS	
0101274-04		KITS	
0101281		KITS	
0101294		KITS	
0101295	45402	37	
0101295	45402	37A	
0101296		KITS	
0101297		KITS	
0101300		KITS	
0101301		KITS	
0101377		KITS	
0101378		KITS	
0101383-01	45402	37	33
0101383-01	45402	37A	31A
0101391-06	45402	37	35
0101391-06	45402	37A	33
0101469	45402	37	
0101469	45402	KITS	
0106907-0	45402	37	
0106907-0	45402	37A	
012-7117	86579	167	16
012-7399	86579	73	46
019078A	89513	262C	6
02-0651-03	31435	194	55
02-1018-16	31435	194	140
02-1031-08	31435	194	138
02-1031-08	31435	194	216
02-1031-08	31435	194	69
02-1045-05	31435	194	191
02-1046-05	31435	194	187
02-1049-01	31435	194	160
02-1050-03	31435	194	141
02-1050-03	31435	194	50
02-1054-03	31435	194	109
02-1056-04	31435	194	20
02-1057-02	31435	194	144
02-1057-03	31435	194	150
02-1061-01	31435	194	67
02-1062-01	31435	194	213
02-1065-01	31435	194	11
02-1065-05	31435	194	49
02C12	89513	261	7
02FC135	00736	79	15
02T347-205	00736	79	16
02T826-218	00736	83	21I
02T826-231	00736	83	21D
02W156-110	00736	79	23
02W156-173	00736	79	24
02W156-197-1	00736	A7	1
02W156-213	00736	79	20
02W156-214	00736	79	22
02W156-218	00736	79	17
02W156-231	00736	79	11
02W241148	00736	83	21C
02W518-140	00736	79	25
02W715-110	00736	79	7
024973501-1000-185-018	75250	52	8
03-0005-118	31435	194	94
03-0005-137	31435	194	97
03-001-0250	09455	239	
03-0029-07	31435	194	77
03-0029-09	31435	194	115
03-0044-06	31435	194	137
03-0044-07	31435	194	102
03-0044-07	31435	194	135
03-0044-07	31435	194	173
03-0044-07	31435	194	206
03-0044-12	31435	194	119
03-0044-13	31435	194	188
03-0044-13	31435	194	200
03-0059-14	31435	194	88
03-0059-19	31435	194	83
03-0059-35	31435	194	127
03-0059-43	31435	194	125
03-0059-50	31435	194	123
03-0062-05	31435	194	36
03-0063-04	31435	194	117
03-0063-04	31435	194	162
03-0063-04	31435	194	196
03-0063-04	31435	194	223
03-0063-04	31435	194	80
03-0064-07	31435	194	35
03-0065-03	31435	194	199
03-0065-06	31435	194	153
03-0065-06	31435	194	166
03-0065-06	31435	194	197
03-0065-06	31435	194	95
03-0065-07	31435	194	129
03-0065-10	31435	194	130
03-0065-10	31435	194	202
03-0065-18	31435	194	181
03-0065-19	31435	194	208
03-0066-05	31435	194	143
03S683-211	00736	96	3
03S683A135	00736	96	5
03S705P164	00736	79	12
03S705P164	00736	96	2

REFERENCE NUMBER	MFG CODE	FIG NUMBER	ITEM NUMBER
03T289A205	00736	96	6
03W1147-140	00736	96	12
03W199-110	00736	96	10
03W199-140	00736	96	11
03W199-213	00736	96	8
03W199-214	00736	96	9
03W199-218	00736	96	7
03W199-231	00736	96	1
030044-19	31435	194	63
030768	89305	169	12
030768	89305	169	62
030880	89305	169	61
030962	89305	169	10
030962	89305	169	15
030994	89305	169	60
035005	89305	169	4
035147	89305	169	7
035748	89305	169	11
041-349	03481	43	12
041-349	03481	45	7
045-2165	86579	197A	7
0465	04347	MSUP	
046850	80049	BULK	
049416		KITS	
05-0420-02	91662	BULK	
05-120204	31435	194	44
05-120207	31435	194	74
05-120208	31435	194	29
05-345064	31435	193	28D
05-345154	31435	193	45
05-345154	31435	193	87
05-347153	31435	193	2
05-347153	31435	193	89
05-347154	31435	193	2
05-347184	31435	193	39
05-350000	31435	194	220
05-350001	31435	194	194
05-350001	31435	194	221
05-370035	31435	83	35L
05-370119	31435	193	28B
05-370119	31435	193	28E
05-370119	31435	193	78
05-370119	31435	193	83
05-370119	31435	194	5
05-370121	31435	194	47
05-370121	31435	194	9
05-370143	31435	194	72
05-370162	31435	193	64
05-370304	31435	194	51
05-374058	31435	193	66
05-374059	31435	193	65
05-374072	31435	193	75
05-374073	31435	193	73
05-374085	31435	193	43
05-374089	31435	193	59
05-374090	31435	193	57
05-374097	31435	193	74
05-374193	31435	194	61
05-374210	31435	194	54
05-374211	31435	194	52
05-378354	31435	194	59
05-378363	31435	194	16
05-416900	31435	194	219
05-425811	31435	83	35N
05-435040	31435	194	
05-435500	31435	194	222
05-435503	31435	193	90
05-445002	31435	194	215
05-499700	31435	193	22
05-499701	31435	193	23
05-499702	31435	193	20
05-5000096	31435	193	25
05-500376	31435	194	91
05-500379	31435	194	87
05-500382	31435	194	106
05-500384	31435	194	147
05-500386	31435	194	120
05-500386	31435	194	183
05-500386	31435	194	224
05-500403	31435	193	13A
05-500407	31435	194	184
05-504900	31435	194	124
05-504900	31435	194	177
05-505042	31435	194	92
05-506025	31435	194	164
05-506600	31435	193	12
05-506601	31435	193	21
05-506603	31435	193	26
05-506714	31435	193	17
05-506721	31435	193	13
05-506742	31435	194	142
05-506767	31435	193	19
05-506798	31435	194	89
05-507951	31435	193	48
05-507963	31435	194	132
05-507963	31435	194	158
05-508500	31435	193	81
05-508550	31435	193	81
05-508551	31435	193	76
05-508551	31435	194	33
05-508600	31435	194	218
05-508601	31435	194	201
05-508611	31435	194	68
05-508612	31435	194	37
05-509338	31435	194	214
05-556002	31435	193	36
05-556003	31435	193	34
05-627302	31435	194	62
05-631129	31435	193	33
05-652500	31435	193	67
05-652502	31435	193	72
05-900106	31435	193	16
05-900400	31435	193	60
05-901500	31435	193	10
05-901600	31435	193	15
05-990005	31435	193	14
05-990018	31435	194	100
05-990018	31435	194	128
05-990018	31435	194	161
05-990028	31435	194	90
05-990032	31435	194	110
05-990032	31435	194	154
05-990136	31435	193	68
051-002-001	26055	221A	6
06-119764	31435	193	3
06761-1-5	82647	BULK	
075-100030-03	73949	226	42
08C92	89513	251	45
08D20		260	58
08D20		KITS	
081-009	88379	128	27
093002	92555	BULK	
1 1-4TE57DH1200	44655	200	13
1 1-4TE57DS10	44655	167	22
1 1-4TE57DS20	44655	157	74
1 1-4TE57DS20	44655	158	67
1 1-4TE57FS18	44655	157	70
1-2X7-16TYPEA	83584	BULK	
1-2X9-16TYPEA	83584	BULK	
1-3891	70829	MSUP	
1-50	05972	MSUP	
1-635337-05	17771	210	

REFERENCE NUMBER	MFG CODE	FIG NUMBER	ITEM NUMBER
1-8X1-4TYPEA	83584	81	103
1-8X11-16TYPEA	83584	BULK	
1-8X3-4LG	73957	265	147
1-8X3-4LG	73957	268	104
1-8X3-8TYPE A	83584	89	81
1-8X3-8TYPEA	83584	81	67
1-8X3-8TYPEA	83584	83	140
1-8X3-8TYPEA	83584	83	171
1-8X3-8TYPEA	83584	83	337
1-8X3-8TYPEA	83534	92	27A
1-8X3-8TYPEA	83584	92	81A
1-8X5-8TYPEA	83584	83	307
1-8X7-16TYPEA	83584	76	43
1-8X7-16TYPEA	83584	76	45
1-8X7-16TYPEA	83584	76	46B
1-8X7-16TYPEA		80	4
1-8X9-16TYPEA	83584	76	43
1-8X9-16TYPEA	83584	80	13
1-8X9-16TYPEA	88584	81	169
1-8X9-16TYPEA	83584	81	69
1-8X9-16TYPEA	83584	88	58
1A050	98391	129	17
1A050	98391	144	
1A050-11	98391	144	5
1A050-12	98391	144	13
1A060-102	98391	136	17
1L90	08844	33	40
1L97-2	08844	F5	6
1N3612	81349	194	148
1N3612	81349	194	212
1N459A	81349	173	39
1N645	81349	169	22
1N645	81349	169	40
1N645	81349	176	29A
1N645	81349	176	32C
1N645	81349	177	25A
1N645	81349	177	31A
1SE2-3	91929	265	163
1SE2-3	91929	265	169
1SE2-3	91929	265	230
1SE2-3	91929	265	25
1SE2-3	91929	268	68
1SE23-2	91929	231	
1SE3-3	91929	265	39
1SE3-3	91929	268	61
1TA51D150	44655	195	33A
1TL1-31F	91929	201	41
10-101960-145	06840	204	
10-189-000-202	77820	228	129
10-21-024-008	96214	182A	45
10-2269		KITS	
10-2270		KITS	
10-2271		KITS	
10-285404-2S	77820	204A	12
10-31-188-122	01295	182A	42
10-341228-8P	77820	212	26
10-3787		KITS	
10-5842		KITS	
10-5842	89513	262B	11
10-5979		KITS	
10-5979	75511	262B	13
10VINYLFLEX4000	81851	230	24A
100-300-480	99378	184	
100-4059	02111	184	20
100FF5G21	70854	190A	28
10001	07047	173	42
100012	79318	67A	28
1003067	77068	145	23
1003068		KITS	
1003068	77068	145	16
1003069		145	18
1003069		KITS	
1003071		KITS	
1003071	77068	145	17
1003092		KITS	
1003092	77068	145	14
100334	01413	F21	6
10038	07047	192	21
10038	07047	192	35A
10038	07047	192	59
1004828	82402	265	122
1004828	82402	268	128
1005CH47-000-1	81996	280	15
1005CH47-000-2	81996	280	
100550	89513	262A	8
1005701		KITS	
100650A	89513	262A	5
1007	70707	MSUP	
100703	89513	262A	3
1007097	77068	119	
100710A	89513	262A	7
100711A	89513	262A	2
101KSZZ	38443	265	189
101KSZZ	38443	265	192
101KSZZ	38443	268	163
1010037	94988	210	68
1011-4	00624	62	74
1011-4	00624	QC1	142
1011-4	00624	217	
1011-4	00624	217A	18
1013008	77068	145	
1013008	77068	KITS	
1013009	77068	145	
1013009	77068	KITS	
1013016	77068	119	
1013016	77068	KITS	
101310	62983	154	39
1019-4	00624	62	3
1019-4	00624	217	
1019-4	00624	217A	18
1025-401	99194	247	18
1025-405	99194	247	21
1025-410	99194	247	20
1025-611	99194	247	14
1025-800D	99194	229	8
1025-800F	99194	229	8
1025-802	99194	247	7
1025-804	99194	247	3
1025-806	99194	247	28
1025-807	99194	247	15
1025-812	99194	247	25
1025-853	99194	247	17
1025-902-1	99194	247	8
1025-904	99194	247	5
1025-922	99194	247	4
1025-931	99194	247	18
1025-935-1	99194	247	9
10254		KITS	
10254	99643	122	9
10254-1	99643	121	15
10254-1		KITS	
102549E	73760	216	80
102650JE	73760	216	
102650JE	73760	216	38
102654GK	73760	216	
102655B	73760	216	63
102655E	73760	216	63
102663B	73760	216	35
102842JR	73760	216	
102842JR	73760	216	7
102855B	73760	216	9

REFERENCE NUMBER	MFG CODE	FIG NUMBER	ITEM NUMBER
102899B		216	45
102899B		KITS	
102913CY	73760	216	18A
102913DC		KITS	
102913DC	73760	216	18
102915	01413	F12	5
103KSQ5A7	38443	265	295
103KSQ5A7	38443	265	55
103KSQ5A7	38443	268	14
103KSQ5A7	38443	268	256
103KSZZ	38443	265	293
103KSZZ	38443	265	56
103KSZZ	38443	268	254
103KSZZ	38443	268	7
10300078	18876	BULK	
10303		KITS	
10303	99643	272	31
10311	35609	126	15
10311	35609	128	26
10314	35609	126	15
10314	35609	128	26
103198C	73760	216	82
103198L	73760	216	82
103201A	73760	216	73
103202L	73760	216	
103202Z	73760	216	
103204A	73760	216	
103205A	73760	216	68
103205N	73760	216	68
103206A	73760	216	83
103337A		KITS	
103337A	73760	216	78
103429B	89513	262C	7
103430A1	89513	262C	2
103475	62983	154	33
103475	62983	154	35
103480	62983	154	18
103482	62983	154	20
103489	62983	154	9
103650A		KITS	
103650A	73760	216	46
104183A	89513	262C	4
104419-1	88818	165	66
104568	01413	F23	
104685EN	73760	216	
104685EN	73760	KITS	
104685PW	73760	216	
104685PW	73760	KITS	
1047-11	94641	151	14
1047-1111	94641	151	
1047-1111	94641	KITS	
1047-12	94641	151	3
1047-14		KITS	
1047-15		KITS	
104950FL	73760	216	
104950FL	73760	KITS	
104951BJ	73760	216	
104951BJ	73760	KITS	
105092HV	73760	216	
105092HV	73760	KITS	
105185A		KITS	
105185B		KITS	
10549	35609	126	9
10549	35609	128	22
10551	35609	126	9
10551	35609	128	22
10555	88379	128	
10556	35609	126	8
10556	35609	128	21
10558	88379	128	11
10578	88379	128	33
10587076-3	18876	MSUP	
106-41-1	14232	118	108
106-41-2	14232	118	108
10606512-3	18876	F19	11
106335	62983	138	6
106605	62983	154	17
106611A	73760	216	45
106785D100	73760	216	
106785D100	73760	216	38
106786R122	73760	216	
106788R115	73760	216	
106788R115	73760	216	7
107C2311-2	77272	245	
107C2311-3	77272	245	
107C2311-3	77272	246	
107C2312-2	77272	245	
107DS202-1	77272	95	148
107D2139-1	77272	18	
107D2139-1	77272	95	152A
107D2417-1	77272	18	
107D2417-1	77272	95	153
107E1120-7	77272	179	15A
107E1120-7	77272	179	32
107H4600-1	77272	228	138
107PS406-2	77272	220	7
107PS406-2	77272	221	30
107R3559-4	77272	75	24
107R3559-4	77272	75	74
107S8473-3	77272	207	10
107S8473-4	77272	207	9
107S8473-5	77272	207	11
107S8473-6	77272	207	
107S8473-7	77272	207	12
107478J	73760	216	33D
108P454-1	83843	215	38
1087972-129	75477	94	18
109D305X9075C2	56289	173	18
1091809	81039	231	33
11-0105	93712	248	64
11-0106	93712	248	62
11-0109	93712	248	52
11-0111	93712	248	112
11-0112	93712	248	65
11-0113	93712	248	
11-0114	93712	248	107
11-0115	93712	248	106
11-0119	93712	248	105
11-0122	93712	248	98
11-0123	93712	248	99
11-0127	93712	248	16
11-0127-1	93712	248	80
11-0128-1	93712	248	108
11-0128-2	93712	248	109
11-0128-3	93712	248	108
11-0128-4	93712	248	109
11-0129	93712	248	104
11-0130	93712	248	103
11-0132	93712	248	1
11-0134	93712	248	93
11-0134-2	93712	248	93
11-0136	93712	248	20
11-0137	93712	248	54
11-0138	93712	248	
11-0138-1	93712	248	
11-0139	93712	248	
11-0140	93712	248	55
11-0145	93712	248	71
11-0146	93712	248	50
11-0147	93712	248	46
11-0156	93712	248	66
11-0158-1	93712	248	76

REFERENCE NUMBER	MFG CODE	FIG NUMBER	ITEM NUMBER
11-0162-1	93712	248	70
11-0166	93712	248	48
11-0167	93712	248	75
11-0168	93712	248	74
11-0172-1	93712	248	
11-0172-1A	93712	248	
11-0173	93712	248	53
11-0175-1	93712	248	
11-0176	93712	248	73
11-0180	93712	248	57
11-0181	93712	248	38
11-0183	93712	248	
11-0183	93712	248	19
11-0183-1	93712	248	
11-0183-1	93712	248	19
11-0185	93712	248	28
11-0186-1	93712	248	
11-0186-1	93712	248	15
11-0186-2	93712	248	
11-0186-2	93712	248	15
11-0187	93712	248	35
11-0189	93712	248	86
11-0190	93712	248	88
11-0191	93712	248	
11-0191-1	93712	248	
11-0192	93712	248	72
11-0194-1	93712	248	85
11-0195	93712	248	39
11-0475-3	72914	197A	9
11-0476-3	72914	197A	
11-0481-1	72914	197A	3
11-0483-1	72914	197A	
11-0497-1	72914	197A	12
11-0500-1	72914	197A	
11-0568	93712	248	51
11-0569	93712	248	33
11-0571	93712	248	27
11-0575	93712	248	23
11-0576	93712	248	30
11-0906-1	93712	248	
11-0906-2	93712	248	
11-0968	93712	248	
11D2-02J	76906	62	
11D33	89513	260	
11D33	89513	KITS	
11D47	89513	262	
11D47		KITS	
11D48	89513	262	
11D48	89513	KITS	
11008	35609	126	16
11008	35609	128	1
11024	99643	132	11
110391	62983	154	
110393	62983	154	
110402	62983	154	23
1105870	82402	265	130
1105870	82402	268	108
11072502	18876	BULK	
11085	99643	111	10
11096	72914	197	8
1112-589978	92003	117	72
1112-589978	92003	129	114
111550	62983	266	35
11191	94988	210	100
111964	62983	154	
111965	62983	154	37
112547	62983	154	5
113-1	27942	37A	
1131035	81039	231	92
113406-1	81996	284	5
113406-1	81996	285	4
113407-1	81996	284	6
113407-1	81996	285	6
113408-1	81996	284	27
113408-1	81996	285	32
113409-1	81996	284	30
113409-1	81996	285	33
113410-1	81996	284	32
113410-1	81996	285	35
113411-1	81996	284	34
113411-1	81996	285	36
113412-1	81996	284	36
113412-1	81996	285	37
113416-1	81996	284	9
113416-1	81996	285	17
113416-1	81996	287	8
113417-1	81996	284	19
113418-1	81996	284	43
113418-1	81996	285	44
113418-1	81996	287	8
113419-1	81996	284	17
113419-1	81996	285	16
113420-1	81996	284	41
113420-1	81996	285	31
113423-1	81996	284	16
113423-1	81996	285	19
113425-1	81996	284	46
113425-1	81996	285	42
113426-5	81996	294	1
113427-1	81996	284	51
113428-5	81996	294	2
113429-5	81996	294	3
113431-1	81996	284	47
113431-1	81996	285	39
113433-1	81996	287	34
113438-1	81996	287	16
113438-3	81996	287	15
113443-1	81996	287	13
113448-1	81996	287	32
113460-1	81996	284	49
113460-1	81996	285	47
113461-6	81996	285	45
113466-5	81996	284	50
113466-5	81996	285	46
113501-5	81996	294	4
113502-3	81996	283	5
113504-1	81996	286	13
113507-1	81996	286	23
113509-1	81996	286	16
113511-1	81996	286	24
113513-1	81996	286	3
113521-1	81996	286	20
113523-1	81996	286	9
113527-1	81996	286	28
113531-3	81996	283	1
113531-3	81996	284	
113532-3	81996	283	2
113532-3	81996	286	
113534-3	81996	283	4
113534-4	81996	283	4
113536-3	81996	283	6
113537-3	81996	283	7
113537-3	81996	294	
113538-2	81996	287	10
113540-3	81996	283	3
113688-1	81996	285	49
11369	72914	197	25
113692-1	81996	285	48
11373	72914	197	26
113745-1	81996	283	7
113745-1	81996	294	
113749-1	81996	283	1

REFERENCE NUMBER	MFG CODE	FIG NUMBER	ITEM NUMBER
113749-1	81996	285	
113749-2	81996	283	1
113749-2	81996	285	
113753-1	81996	283	5
113754-1	81996	283	1
113754-1	81996	285	
113754-2	81996	283	1
113754-2	81996	285	
113755-1	81996	283	4
113756-1	81996	283	3
113758-1	81996	283	5
113762-1	81996	283	3
113763-1	81996	283	6
113764-1	81996	283	7
113764-1	81996	294	
113765-1	81996	283	6
113766-1	81996	283	4
11379		KITS	
11379	99643	121	13
11379	99643	122	7
113804-1	81996	284	25
113804-1	81996	285	25
113805-1	81996	284	28
113805-1	81996	285	26
113805-2	81996	284	33
113805-2	81996	285	34
113806-1	81996	284	29
113806-1	81996	285	27
113807-1	81996	284	26
113807-1	81996	285	28
113856-1	81996	294	13
113856-2	81996	294	14
113857-1	81996	294	11
113857-2	81996	294	12
113858-1	81996	294	9
113859-1	81996	294	10
113860-1	81996	294	7
113861-1	81996	294	8
113862-1	81996	294	5
113862-2	81996	294	6
113863-1	81996	294	15
113863-3	81996	294	19
113864-1	81996	294	16
113865-1	81996	283	7
113865-1	81996	294	
113866-1	81996	283	7
113866-1	81996	294	
113868-1	81996	294	17
113868-2	81996	294	18
1139	15814	37B	47
11391		KITS	
11391	99643	121	14
11391	99643	122	8
114CK113-3	77272	222	44
114CS100-10	77272	228	16
114CS100-10	77272	232	
114CS100-11	77272	228	17
114CS100-11	77272	232	
114CS100-12	77272	228	18
114CS100-14	77272	228	
114CS100-15	77272	228	16
114CS100-15	77272	232	
114CS100-16	77272	228	17
114CS100-16	77272	232	
114CS100-17	77272	228	
114CS100-18	77272	228	16
114CS100-18	77272	232	
114CS100-2	77272	228	16
114CS100-23	77272	228	
114CS100-24	77272	228	17
114CS100-25	77272	228	16
114CS101-1	77272	228	110
114CS101-1	77272	229	25
114CS101-1	77272	230	
114CS101-10	77272	228	111
114CS101-10	77272	230	
114CS101-2	77272	228	111
114CS101-2	77272	230	
114CS101-3	77272	228	110
114CS101-3	77272	229	25
114CS101-3	77272	230	
114CS101-4	77272	228	111
114CS101-4	77272	230	
114CS101-8	77272	228	111
114CS101-9	77272	228	110
114CS101-9	77272	229	25
114CS101-9	77272	230	
114CS103-1	77272	222	
114CS103-1	77272	223	
114CS103-1	77272	228	
114CS103-1	77272	228	19
114CS103-1	77272	237	26
114CS103-1	77272	237	54
114CS103-1	77272	244	
114CS103-2	77272	223	
114CS104-14	77272	244	34
114CS104-14	77272	248	
114CS104-15	77272	222	44
114CS104-15	77272	248	
114CS104-16	77272	244	34
114CS104-16	77272	248	
114CS104-17	77272	222	44
114CS104-17	77272	248	
114CS104-18	77272	244	34
114CS104-19	77272	222	44
114CS105-1	77272	228	39
114CS105-1	77272	231	
114CS105-2	77272	228	40
114CS105-2	77272	231	
114CS105-3	77272	228	39
114CS105-3	77272	231	
114CS105-4	77272	228	40
114CS105-4	77272	231	
114CS105-5	77272	228	39
114CS105-5	77272	231	
114CS105-6	77272	228	40
114CS105-6	77272	231	
114CS106-3	77272	222	25
114CS106-4	77272	222	27
114CS106-5	77272	222	26
114CS106-6	77272	222	28
114CS107-1	77272	226	32
114CS109-1	77272	222	
114CS109-7	77272	222	29
114CS110-1	77272	229	8
114CS110-1	77272	247	
114CS110-2	77272	229	8
114CS110-2	77272	245	11
114CS110-2	77272	246	10
114CS110-2	77272	247	
114CS110-3	77272	246	13
114CS110-3	77272	247	
114CS110-4	77272	245	11
114CS110-4	77272	246	10
114CS110-4	77272	247	
114CS110-6	77272	246	13
114CS110-6	77272	247	
114CS112-3	77272	239	
114CS112-4	77272	239	
114CS114-1	77272	222	80
114CS114-1	77272	248	
114CS114-10	77272	244	99A

REFERENCE NUMBER	MFG CODE	FIG NUMBER	ITEM NUMBER
114CS114-11	77272	222	210
114CS114-11	77272	244	99A
114CS114-2	77272	244	99A
114CS114-2	77272	248	
114CS114-20	77272	244	99A
114CS114-22	77272	244	89
114CS114-22	77272	244	99A
114CS114-24	77272	222	210
114CS114-24	77272	244	99A
114CS114-26	77272	244	99A
114CS114-3	77272	248	
114CS114-9	77272	222	80
114CS115-2	77272	222	
114CS115-2	77272	244	
114CS116-1	77272	222	
114CS116-1	77272	244	
114CS117-1	77272	228	39
114CS117-1	77272	230	
114CS117-2	77272	228	40
114CS117-2	77272	230	
114CS118-1	77272	222	
114CS118-1	77272	222	211
114CS118-1	77272	244	
114CS118-1	77272	248	59
114CS118-2	77272	222	
114CS118-2	77272	222	211
114CS118-2	77272	244	
114CS119-1	77272	222	12
114CS120-1	77272	222	15
114CS120-2	77272	222	16
114CS123-1	77272	244	
114CS124-1	77272	102	31
114CS124-1	77272	103	27A
114CS124-1	77272	244	
114CS125-1	77272	222	
114CS125-1	77272	244	
114CS125-2	77272	222	
114CS125-2	77272	240	86
114CS125-2	77272	243	
114CS125-2	77272	244	
114CS125-3	77272	239	
114CS125-4	77272	239	
114CS125-5	77272	240	85
114CS126-1	77272	248	59
114CS127-1	77272	239	
114CS127-1	77272	240	21
114CS127-2	77272	239	
114CS127-3	77272	239	
114CS127-3	77272	240	11
114CS127-3	77272	240	44
114CS127-3	77272	240	54
114CS127-3	77272	243	13
114CS127-3	77272	244	108
114CS127-3	77272	244	119
114CS127-3	77272	244	141
114CS127-4	77272	236	10
114CS127-4	77272	236	23
114CS127-4	77272	243	20
114CS127-4	77272	243	27
114CS127-4	77272	244	130
114CS127-4	77272	248	44
114CS127-6	77272	238	51
114CS127-6	77272	239	
114CS128-1	77272	239	42
114CS128-1	77272	239	76
114CS129-2	77272	223	145
114CS130-1	77272	223	164
114CS2327-1	77272	240	
114C1010-4	77272	222	
114C1010-5	77272	228	
114C1011-12	77272	222	
114C1011-2	77272	222	
114C1011-4	77272	222	
114C1011-8	77272	222	
114C1011-9	77272	222	
114C1012-2	77272	222	
114C1013-1	77272	222	11B
114C1013-3	77272	222	11A
114C1013-30	77272	228	121A
114C1013-33	77272	228	52A
114C1013-34	77272	228	52B
114C1013-4	77272	222	9
114C1013-5	77272	222	10
114C1013-6	77272	222	11C
114C1013-7	77272	222	11
114C1014-1	77272	223	7
114C1014-11	77272	228	10A
114C1014-16	77272	222	8
114C1014-2	77272	223	27
114C1014-21	77272	223	20
114C1014-22	77272	223	36
114C1014-3	77272	223	13
114C1014-4	77272	223	36
114C1014-7	77272	228	52B
114C1014-8	77272	228	10B
114C1015-1	77272	223	28
114C1015-105	77272	228	
114C1015-2	77272	223	37
114C1015-3	77272	228	70
114C1015-4	77272	273	23
114C1015-5	77272	228	77
114C1015-6	77272	273	19
114C1017-1	77272	235	20
114C1017-1	77272	238	26
114C1017-1	77272	238	33
114C1100-1	77272	222	20
114C1100-1	77272	223	
114C1100-2	77272	222	21
114C1100-2	77272	223	
114C1102-1	77272	223	
114C1103-1	77272	223	
114C1105-1	77272	222	13
114C1105-1	77272	225	
114C1106-1	77272	222	13
114C1106-1	77272	225	
114C1106-2	77272	222	13
114C1106-2	77272	225	
114C1106-3	77272	222	13
114C1106-4	77272	222	13
114C1106-4	77272	225	
114C1107-2	77272	222	
114C1108-13	77272	222	
114C1108-3	77272	222	
114C1110-1	77272	223	
114C1110-2	77272	223	
114C1110-3	77272	223	226
114C1110-4	77272	223	238
114C1111-1	77272	223	
114C1111-2	77272	223	232
114C1112-3	77272	223	230
114C1112-4	77272	223	236
114C1112-6	77272	223	
114C1112-7	77272	223	
114C1113-1	77272	223	
114C1113-2	77272	223	245
114C1113-4	77272	223	
114C1113-5	77272	223	245
114C1114-1	77772	223	
114C1114-2	77272	223	242
114C1115-3	77272	223	246
114C1116-1	77272	223	247
114C1116-2	77272	223	248

REFERENCE NUMBER	MFG CODE	FIG NUMBER	ITEM NUMBER
114C1118-2	77272	223	51
114C1119-1	77272	223	117
114C1119-2	77272	223	117
114C1120-1	77272	223	82
114C1121-1	77272	223	111
114C1122-1	77272	223	
114C1122-2	77272	223	
114C1123-1	77272	223	
114C1123-2	77272	223	
114C1123-3	77272	223	118
114C1123-4	77272	223	118
114C1124-1	77272	223	
114C1124-5	77272	223	
114C1124-6	77272	223	
114C1124-7	77272	223	97
114C1125-6	77272	223	166
114C1126-1	77272	223	52
114C1127-1	77272	223	99
114C1128-1	77272	223	95
114C1130-1	77272	223	57
114C1130-2	77272	223	62
114C1130-4	77272	223	57
114C1130-5	77272	223	62
114C1131-1	77272	223	
114C1131-2	77272	223	159
114C1131-4	77272	223	
114C1131-5	77272	223	159
114C1131-6	77272	223	
114C1131-7	77272	223	
114C1132-1	77272	225	4
114C1132-2	77272	225	5
114C1132-4	77272	225	4
114C1132-5	77272	225	5
114C1132-6	77272	225	4
114C1132-7	77272	225	5
114C1132-8	77272	225	4
114C1134-2	77272	225	2
114C1136-1	77272	223	87
114C1137-3	77272	223	105
114C1138-1	77272	223	98
114C1140-10	77272	223	69
114C1140-11	77272	223	64
114C1140-12	77272	223	65
114C1140-13	77272	223	69
114C1140-14	77272	223	69
114C1140-6	77272	223	64
114C1140-7	77272	223	65
114C1140-8	77272	223	73
114C1140-9	77272	223	69
114C1141-1	77272	223	208
114C1141-2	77272	223	209
114C1141-3	77272	223	218
114C1141-4	77272	223	219
114C1142-1	77272	223	112
114C1142-2	77272	223	112
114C1146-1	77272	223	165
114C1150-1	77272	223	
114C1150-2	77272	223	121
114C1155-1	77272	222	
114C1155-2	77272	222	
114C1156-4	77272	222	
114C1156-7	77272	222	24
114C1160-1	77272	223	170
114C1160-2	77272	223	171
114C1160-3	77272	223	177
114C1160-4	77272	223	178
114C1161-1	77272	223	
114C1161-2	77272	223	134
114C1163-1	77272	223	
114C1163-2	77272	223	144
114C1165-1	77272	223	193
114C1165-2	77272	223	194
114C1165-3	77272	223	201
114C1165-4	77272	223	202
114C1168-1	77272	223	179
114C1168-2	77272	223	180
114C1168-3	77272	223	186
114C1168-4	77272	223	187
114C1175-1		222	17
114C1175-1	77272	226	
114C1175-2		222	17
114C1175-2	77272	226	
114C1175-3		222	17
114C1175-3	77272	226	
114C1175-4		222	17
114C1175-4	77272	226	
114C1175-5		222	17
114C1175-5	77272	226	
114C1182-1	77272	226	7
114C1182-2	77272	226	11
114C1183-1	77272	226	16
114C1183-2	77272	226	19
114C1189-1	77272	226	29
114C1192-1	77272	226	24
114C1200-1	77272	222	31
114C1200-1	77272	228	
114C1200-2	77272	222	31
114C1200-2	77272	228	
114C1201-3	77272	222	31
114C1201-3	77272	228	
114C1202-1	77272	222	31
114C1202-1	77272	228	
114C1204-1	77272	222	30
114C1204-1	77272	235	
114C1204-2	77272	222	30
114C1204-2	77272	235	
114C1209-2	77272	228	
114C1210-4	77272	228	
114C1210-5	77272	228	181
114C1210-6	77272	228	192
114C1210-8	77272	228	176A
114C1210-8	77272	228	187A
114C1210-9	77272	228	
114C1214-1	77272	228	
114C1214-2	77272	228	169
114C1215-2	77272	228	170
114C1215-6	77272	228	
114C1216-3	77272	240	30
114C1216-4	77272	235	6
114C1216-5	77272	223	169
114C1216-6	77272	240	31
114C1216-7	77272	239	176
114C1216-9	77272	239	100
114C1217-1	77272	235	5A
114C1217-2	77272	235	
114C1217-3	77272	235	
114C1218-1	77272	235	12
114C1218-10	77272	240	34
114C1218-4	77272	223	167
114C1218-5	77272	223	168
114C1218-6	77272	223	122
114C1218-7	77272	223	122
114C1218-8	77272	240	32
114C1218-9	77272	240	33
114C1219-1	77272	235	
114C1219-2	77272	240	
114C1221-5	77272	228	
114C1221-6	77272	228	
114C1221-7	77272	228	
114C1222-1	77272	228	
114C1222-1	77272	229	26
114C1222-3	77272	229	30

REFERENCE NUMBER	MFG CODE	FIG NUMBER	ITEM NUMBER
114C1224-15	77272	245	16
114C1224-15	77272	245	7
114C1224-2	77272	228	53
114C1224-2	77272	245	
114C1224-23	77272	245	17
114C1225-2	77272	228	
114C1225-4	77272	228	
114C1226-2	77272	228	59
114C1226-3	77272	228	
114C1227-3	77272	228	
114C1227-5	77272	228	
114C1227-6	77272	228	58A
114C1227-8	77272	228	
114C1228-1	77272	245	
114C1228-2	77272	245	6
114C1228-3	77272	246	1
114C1228-4	77272	246	
114C1228-5	77272	246	1
114C1228-6	77272	246	
114C1229-1	77272	229	9
114C1229-1	77272	245	9
114C1229-1	77272	246	9
114C1229-2	77272	245	9
114C1230-1	77272	235	
114C1230-2	77272	235	26
114C1231-1	77272	235	
114C1231-2	77272	235	22
114C1232-10	77272	235	37
114C1232-5	77272	235	37
114C1232-6	77272	235	
114C1232-7	77272	235	37
114C1233-15	77272	235	32
114C1233-16	77272	235	
114C1233-17	77272	235	32
114C1233-8	77272	235	32
114C1234-2	77272	235	26
114C1238-1	77272	245	
114C1240-20	77272	234	
114C1240-22	77272	234	44
114C1241-1	77272	234	
114C1241-2	77272	234	39
114C1241-2	77272	234	4
114C1241-2	77272	234	51
114C1241-3	77272	234	
114C1241-4	77272	234	4
114C1241-5	77272	234	
114C1241-7	77272	234	
114C1241-8	77272	234	
114C1243-11	77272	234	
114C1243-12	77272	234	
114C1243-13	77272	234	
114C1243-7	77272	234	
114C1243-8	77272	234	
114C1243-9	77272	234	
114C1244-2	77272	234	
114C1244-7	77272	234	
114C1244-8	77272	234	
114C1245-4	77272	234	
114C1245-5	77272	234	
114C1245-7	77272	234	
114C1246-1	77272	234	42
114C1246-?	77272	234	7
114C1246-2	77272	234	
114C1246-3	77272	234	54
114C1246-4	77272	234	
114C1247-1	77272	234	43
114C1250-5	77272	234	45
114C1250-8	77272	228	31
114C1250-8	77272	234	
114C1251-1	77272	234	32
114C1251-3	77272	234	26
114C1251-4	77272	234	37
114C1252-1	77272	234	36
114C1254-2	77272	228	109
114C1254-2	77272	246	
114C1254-3	77272	228	109
114C1254-3	77272	246	
114C1255-1	77272	228	60
114C1255-1	77272	229	
114C1256-1	77272	229	36
114C1256-1	77272	234	
114C1256-11	77272	234	53
114C1256-13	77272	234	
114C1256-2	77272	234	
114C1256-3	77272	234	56
114C1256-4	77272	234	
114C1257-3	77272	228	
114C1257-3	77272	229	41
114C1257-4	77272	228	
114C1257-4	77272	229	42
114C1257-5	77272	228	
114C1257-5	77272	229	45
114C1258-1	77272	229	13
114C1258-2	77272	229	16
114C1259-1	77272	234	55
114C1267-1	77272	234	46
114C1267-2	77272	234	57
114C1270-10	77272	234	
114C1270-11	77272	234	9
114C1270-8	77272	234	10
114C1270-9	77272	228	24
114C1270-9	77272	234	
114C1271-15	77272	234	
114C1271-17	77272	234	
114C1271-18	77272	234	16
114C1271-19	77272	234	15
114C1271-20	77272	234	17
114C1271-21	77272	228	24
114C1271-21	77272	234	
114C1271-24	77272	234	21
114C1271-27	77272	234	11
114C1272-1	77272	234	8
114C1275-1	77272	228	106
114C1275-1	77272	228	23B
114C1276-1	77272	228	107
114C1280-5	77272	228	108
114C1290-3	77272	245	19
114C1329-1	77272	235	11
114C1329-1	77272	240	29
114C2000-1	77272	222	
114C2000-2	77272	242	
114C2000-3	77272	243	
114C2000-4	77272	244	
114C2001-3	77272	222	
114C2001-4	77272	222	
114C2010-21	77272	222	41D
114C2010-22	77272	222	41E
114C2010-23	77272	222	41F
114C2010-24	77272	222	41G
114C2010-25	77272	243	5
114C2010-26	77272	243	6
114C2010-27	77272	243	7
114C2010-28	77272	243	7A
114C2010-29	77272	244	6
114C2010-30	77272	244	12A
114C2010-31	77272	244	21A
114C2010-41	77272	244	21A
114C2010-5	77272	243	5
114C2010-55	77272	243	5
114C2010-56	77272	243	6
114C2010-57	77272	243	7
114C2010-58	77272	243	7A

REFERENCE NUMBER	MFG CODE	FIG NUMBER	ITEM NUMBER
114C2010-59	77272	244	6
114C2010-60	77272	244	12A
114C2010-8	77272	243	7A
114C2011-1	77272	240	
114C2011-3	77272	240	87
114C2011-5	77272	240	
114C2011-6	77272	240	
114C2012-3	77272	222	
114C2012-4	77272	222	
114C2012-5	77272	222	41H
114C2012-6	77272	222	41J
114C2013-1	77272	244	30A
114C2013-2	77272	244	
114C2013-3	77272	244	30A
114C2020-418	77272	223	228
114C2020-418	77272	223	234
114C2020-418	77272	240	41
114C2020-418	77272	240	61
114C2020-421	77272	240	52
114C2020-424	77272	244	128
114C2020-424	77272	244	139
114C2020-427	77272	236	21
114C2020-428	77272	240	62
114C2020-430	77272	236	8
114C2020-524	77272	238	49
114C2020-525	77272	240	53
114C2020-526	77272	240	42
114C2020-526	77272	243	18
114C2020-526	77272	243	25
114C2020-526	77272	244	106
114C2020-529	77272	240	63
114C2020-533	77272	243	11
114C2020-536	77272	240	79
114C2020-536	77272	244	117
114C2020-619	77272	240	70
114C2020-630	77272	240	80
114C2020-630	77272	240	94
114C2020-818	77272	238	31
114C2020-834	77272	238	49A
114C2021-3	77272	243	
114C2021-3	77272	244	
114C2023-1	77272	240	88
114C2023-2	77272	240	97
114C2024-1	77272	243	
114C2024-2	77272	243	
114C2024-3	77272	222	
114C2024-5	77272	222	
114C2024-6	77272	244	
114C2024-7	77272	244	
114C2026-1	77272	240	100
114C2026-3	77272	11	41
114C2301-1	77272	222	43A
114C2301-1	77272	238	
114C2301-4	77272	238	
114C2302-1	77272	222	43B
114C2302-1	77272	240	
114C2302-2	77272	240	
114C2302-3	77272	240	
114C2302-4	77272	240	
114C2304-1	77272	222	102
114C2304-1	77272	236	
114C2305-1	77272	222	103
114C2305-1	77272	236	
114C2306-1	77272	240	104
114C2306-3	77272	240	
114C2310-1	77272	238	20
114C2310-2	77272	238	21
114C2311-1	77272	238	27
114C2311-2	77272	238	28
114C2312-1	77272	238	43
114C2312-2	77272	238	48A
114C2313-1	77272	238	42
114C2314-1	77272	240	29A
114C2314-2	77272	240	
114C2314-3	77272	240	
114C2314-4	77272	240	
114C2316-1	77272	240	
114C2316-2	77272	240	72
114C2318-1	77272	240	
114C2318-2	77272	240	65
114C2319-1	77272	240	
114C2319-2	77272	240	45
114C2320-4	77272	240	
114C2320-5	77272	240	55
114C2320-6	77272	240	
114C2320-7	77272	240	55
114C2322-1	77272	240	
114C2322-2	77272	240	90
114C2323-1	77272	240	
114C2323-2	77272	240	99
114C2324-1	77272	240	
114C2324-2	77272	240	96
114C2325-1	77272	240	
114C2325-2	77272	240	84
114C2326-1	77272	238	34
114C2326-3	77272	238	35
114C2326-3	77272	238	40A
114C2327-2	77272	240	20A
114C2327-3	77272	240	12
114C2327-4	77272	240	22
114C2330-1	77272	236	
114C2330-2	77272	236	11
114C2331-1	77272	236	
114C2331-2	77272	236	24
114C2332-1	77272	238	19
114C2333-1	77272	238	18
114C2338-1	77272	222	
114C2338-2	77272	222	
114C2338-3	77272	222	
114C2338-4	77272	222	
114C2338-6	77272	240	87
114C2338-7	77272	222	
114C2338-8	77272	222	
114C2400-1	77272	242	
114C2416-1	77272	242	36
114C2416-11	77272	242	36
114C2416-12	77272	242	37
114C2416-13	77272	242	38
114C2416-14	77272	242	39
114C2416-15	77272	242	40
114C2416-16	77272	242	36
114C2416-17	77272	242	37
114C2416-19	77272	242	39
114C2416-2	77272	242	37
114C2416-20	77272	242	40
114C2416-3	77272	242	38
114C2416-4	77272	242	39
114C2416-5	77272	242	40
114C2500-1	77272	244	
114C2501-1	77272	243	
114C2510-1	77272	243	
114C2510-2	77272	243	21
114C2510-4	77272	243	
114C2511-1	77272	243	
114C2511-2	77272	243	28
114C2511-4	77272	243	
114C2512-1	77272	244	
114C2512-2	77272	244	109
114C2512-4	77272	244	
114C2513-2	77272	244	120
114C2513-4	77272	244	
114C2514-5	77272	244	131

REFERENCE NUMBER	MFG CODE	FIG NUMBER	ITEM NUMBER
114C2514-6	77272	244	
114C2515-2	77272	244	142
114C2515-4	77272	244	
114C2516-5	77272	243	9D
114C2516-8	77272	243	9D
114C3000-1	77272	222	
114C3000-2	77272	242	
114C3000-5	77272	244	
114C3000-6	77272	222	
114C3001-1	77272	222	
114C3001-2	77272	244	
114C3010-1	77272	242	36
114C3010-25	77272	242	37
114C3010-26	77272	242	38
114C3010-27	77272	242	39
114C3010-29	77272	242	36
114C3010-3	77272	242	37
114C3010-30	77272	242	40
114C3010-5	77272	242	38
114C3010-7	77272	242	39
114C3010-9	77272	242	40
114C3020-1	77272	222	
114C3020-2	77272	222	
114C3020-5	77272	222	
114C3040-1	77272	222	
114C3040-2	77272	222	
114C3040-3	77272	222	
114C3041-1	77272	244	
114C3041-2	77272	244	
114C3041-3	77272	244	
114C3041-4	77272	244	
114C3042-1	77272	222	69
114C3042-2	77272	222	
114C3042-3	77272	222	69
114C3042-4	77272	222	
114C3042-7	77272	222	189
114C3042-8	77272	222	
114C3042-9	77272	222	189
114C3042-9	77272	222	69
114C3043-1	77272	244	77A
114C3043-2	77272	244	
114C3043-3	77272	244	77A
114C3043-4	77272	244	
114C3043-6	77272	244	77A
114C3043-7	77272	244	
114C3044-2	77272	244	73
114C3045-1	77272	244	
114C3046-11	77272	244	
114C3046-12	77272	244	
114C3046-14	77272	244	88A
114C3046-16	77272	244	88A
114C3046-17	77272	244	
114C3046-18	77272	244	
114C3046-2	77272	244	88A
114C3046-20	77272	222	
114C3046-21	77272	222	199
114C3046-21	77272	222	79
114C3046-3	77272	222	
114C3046-4	77272	244	
114C3046-5	77272	222	
114C3046-6	77272	244	
114C3046-7	77272	222	199
114C3046-7	77272	222	79
114C3046-8	77272	244	88A
114C3047-1	77272	222	
114C3047-1	77272	244	
114C3048-1	77272	222	
114C3048-2	77272	222	
114C3048-2	77272	244	
114C3049-1	77272	222	
114C3049-1	77272	244	
114C3049-2	77272	244	
114C3049-3	77272	244	
114C3049-4	77272	244	
114C3051-1	77272	222	188
114C3051-1	77272	222	67
114C3052-7	77272	222	
114C3052-7	77272	222	212
114C3052-7	77272	244	
114C3052-7	77272	KITS	
114C3053-1	77272	222	200
114C3053-1	77272	222	79A
114C3053-1	77272	244	
114C3053-1	77272	248	61
114C3053-1	77272	KITS	
114C3057-1	77272	244	
114C3057-2	77272	244	
114C3058-1	77272	244	
114C3058-2	77272	244	
114C3059-1	77272	244	
114C3300-1	77272	222	43C
114C3300-1	77272	239	
114C3300-3	77272	239	
114C3300-5	77272	239	
114C3301-1	77272	222	43C
114C3301-1	77272	239	
114C3301-2	77272	239	
114C3301-3	77272	239	
114C3304-1	77272	222	104
114C3304-1	77272	237	
114C3305-1	77272	222	105
114C3305-1	77272	237	
114C3309-1	77272	222	
114C3310-1	77272	239	25
114C3310-11	77272	239	
114C3310-13	77272	239	
114C3310-20	77272	239	25
114C3310-21	77272	239	59
114C3310-3	77272	239	59
114C3311-1	77272	239	31
114C3311-11	77272	239	
114C3311-13	77272	239	
114C3311-3	77272	239	65
114C3312-1	77272	239	43
114C3312-11	77272	239	
114C3312-13	77272	239	
114C3312-3	77272	239	77
114C3313-1	77272	239	22
114C3314-1	77272	239	93
114C3315-1	77272	239	24
114C3316-1	77272	239	107
114C3316-9	77272	239	
114C3317-1	77272	239	177
114C3317-9	77272	239	
114C3318-1	77272	239	135
114C3318-9	77272	239	
114C3319-1	77272	239	121
114C3319-9	77272	239	
114C3320-11	77272	239	
114C3320-3	77272	239	144
114C3323-1	77272	239	57
114C3324-1	77272	239	156
114C3324-3	77272	239	
114C3325-1	77272	239	167
114C3325-9	77272	239	
114C3326-1	77272	239	56
114C3326-20	77272	239	56
114C3326-9	77272	239	
114C3327-21	77272	239	120
114C3327-21	77272	239	134
114C3327-23	77272	239	
114C3327-24	77272	239	120

REFERENCE NUMBER	MFG CODE	FIG NUMBER	ITEM NUMBER
114C3327-24	77272	239	134
114C3328-1	77272	239	155
114C3328-20	77272	239	155
114C3328-9	77272	239	
114C3330-1	77272	222	129
114C3330-1	77272	237	10A
114C3330-9	77272	222	
114C3330-9	77272	237	
114C3331-1	77272	222	117
114C3331-1	77272	237	38A
114C3331-9	77272	222	
114C3331-9	77272	237	
114C3332-1	77272	239	23
114C3332-3	77272	239	99
114C3333-1	77272	239	21
114C3333-3	77272	239	92
114C3334-1	77272	239	58
114C3334-3	77272	239	33
114C3334-3	77272	239	67
114C3334-5	77272	239	162
114C3334-7	77272	239	143
114C3335-1	77272	239	42
114C3335-1	77272	239	76
114C3336-1	77272	239	89
114C3336-20	77272	239	89
114C3336-9	77272	239	
114C3337-1	77272	239	26
114C3337-1	77272	239	60
114C3338-1	77272	239	
114C3338-11	77272	239	
114C3338-13	77272	239	
114C3338-15	77272	222	
114C3338-15	77272	237	
114C3338-17	77272	222	
114C3338-17	77272	237	
114C3338-5	77272	237	
114C3338-7	77272	222	
114C3338-7	77272	237	
114C3338-9	77272	239	
114C3340-1	77272	239	7
114C3340-11	77272	239	13
114C3340-13	77272	239	13A
114C3340-15	77272	222	149
114C3340-15	77272	237	24A
114C3340-16	77272	239	7
114C3340-17	77272	239	106A
114C3340-17	77272	239	175
114C3340-7	77272	222	142
114C3340-7	77272	237	52A
114C3340-9	77272	239	106A
114C3340-9	77272	239	175
114C3351-1	77272	239	65
114C3351-2	77272	239	
114C3352-1	77272	239	77
114C3352-2	77272	239	
114C3400-1	77272	242	
114C3500-1	77272	244	
114C3500-2	77272	244	
114C3500-3	77272	244	
114DK102-4	77272	81	
114DK102-5	77272	83	
114DK102-7	77272	81	
114DK504-1	77272	76	
114DK504-2	77272	76	
114DK504-3	77272	76	
114DK504-4	77272	76	
114DK504-5	77272	76	
114DK504-6	77272	76	
114DK504-7	77272	76	
114DS143-1	77272	81	178
114DS144-1	77272	81	162
114DS145-1	77272	81	160
114DS146-1	77272	81	43
114DS146-1	77272	82	
114DS146-2	77272	81	43
114DS146-2	77272	82	
114DS146-3	77272	82	6A
114DS148-3	77272	81	19
114DS149-1	77272	81	75A
114DS150-1	77272	81	60
114DS152-1	77272	81	36A
114DS152-1	77272	96	
114DS152-2	77272	81	36A
114DS152-2	77272	96	
114DS160-1	77272	81	178
114DS161-1	77272	81	162
114DS162-1	77272	81	160
114DS240-2	77272	81	93
114DS240-2	77272	83	222
114DS241-1	77272	81	89
114DS241-1	77272	83	227
114DS242-1	77272	83	325
114DS243-1	77272	81	168
114DS243-1	77272	83	310
114DS244-11	77272	81	146
114DS244-13	77272	81	146
114DS244-13	77272	83	289
114DS246-1	77272	83	348
114DS246-2	77272	83	348
114DS247-1	77272	83	334
114DS248-1	77272	83	331
114DS249-1	77272	83	346
114DS249-1	77272	88	79
114DS250-1	77272	81	139
114DS250-1	77272	83	270
114DS251-1	77272	83	189
114DS252-1	77272	76	96
114DS252-1	77272	83	145
114DS253-1	77272	83	147
114DS254-2	77272	83	242
114DS254-3	77272	83	242
114DS255-1	77272	81	190
114DS255-1	77272	83	80
114DS255-1	77272	83	86
114DS256-1	77272	83	67
114DS256-1	77272	83	70
114DS256-1	77272	83	73
114DS256-1	77272	83	83
114DS256-1	77272	83	90
114DS257-1	77272	83	198
114DS258-3	77272	81	153
114DS258-3	77272	83	282
114DS258-7	77272	81	153
114DS258-7	77272	83	282
114DS259-1	77272	83	21
114DS259-2	77272	83	21
114DS259-4	77272	83	21
114DS259-5	77272	83	21
114DS261-1	77272	87	23
114DS262-1	77272	81	85
114DS262-1	77272	83	231
114DS262-2	77272	81	85
114DS262-2	77272	83	231
114DS263-1	77272	83	155
114DS264-1	77272	83	129
114DS265-1	77272	83	342
114DS266-1	77272	83	31
114DS267-4	77272	83	232
114DS268-1	77272	83	17
114DS268-1	77272	83	8
114DS269-1	77272	83	41
114DS270-1	77272	87	24

REFERENCE NUMBER	MFG CODE	FIG NUMBER	ITEM NUMBER
114DS271-1	77272	83	63
114DS273-1	77272	83	151
114DS274-1	77272	83	242
114DS275-1	77272	81	139
114DS275-1	77272	83	270
114DS280-1	77272	83	325
114DS281-1	77272	81	146
114DS281-1	77272	83	289
114DS282-1	77272	81	153
114DS282-1	77272	83	282
114DS283-1	77272	81	168
114DS283-1	77272	83	310
114DS284-1	77272	81	89
114DS284-1	77272	83	227
114DS340-1	77272	92	32
114DS340-1	77272	92	86
114DS343-1	77272	90	14
114DS343-2	77272	90	14A
114DS343-3	77272	90	14B
114DS344-1	77272	76	131
114DS344-1	77272	92	102
114DS344-1	77272	92	16
114DS344-1	77272	92	44
114DS344-1	77272	92	58
114DS344-1	77272	92	74
114DS344-2	77272	76	131A
114DS344-2	77272	92	102A
114DS344-2	77272	92	16A
114DS344-2	77272	92	44A
114DS344-2	77272	92	58A
114DS344-2	77272	92	74A
114DS344-3	77272	76	132
114DS344-3	77272	92	102A
114DS344-3	77272	92	16B
114DS344-3	77272	92	44B
114DS344-3	77272	92	58B
114DS344-3	77272	92	74B
114DS345-1	77272	93	12
114DS345-2	77272	93	13
114DS345-3	77272	93	14
114DS346-2	77272	91	22
114DS347-2	77272	91	9
114DS349-1	77272	91	20
114DS350-1	77272	95	175
114DS440-1	77272	95	114
114DS440-1	77272	97	
114DS441-1	77272	95	39
114DS441-1	77272	98	
114DS442-2	77272	95	179
114DS442-2	77272	99	
114DS450-2	77272	93	1
114DS452-1	77272	95	134
114DS452-1	77272	95	15A
114DS452-2	77272	95	66
114DS452-2	77272	95	72
114DS452-2	77272	95	78
114DS452-3	77272	95	134
114DS452-3	77272	95	15A
114DS541-2	77272	76	70
114DS542-4	77272	76	73
114DS543-1	77272	76	151
114DS544-1	77272	76	147
114DS545-1	77272	76	168
114DS547-3	77272	76	123A
114DS547-3	77272	78	
114DS547-4	77272	76	123A
114DS547-4	77272	78	
114DS548-1	77272	76	91
114DS549-1	77272	76	153
114DS550-1	77272	76	173
114DS552-1	77272	76	135A
114DS553-1	77272	76	86
114DS554-1	77272	80	10
114DS555-1	77272	76	60A
114DS556-1	77272	76	33
114DS557-2	77272	76	24B
114DS557-2	77272	79	
114DS558-1		KITS	
114DS558-1	77272	76	25
114DS559-2	77272	76	21A
114DS559-2	77272	79	
114DS559-3	77272	76	21A
114DS559-3	77272	79	
114DS560-1		KITS	
114DS560-1	77272	76	22
114DS561-1	77272	76	4
114DS561-2	77272	76	4
114DS562-3	77272	95	80
114DS562-4	77272	95	106
114DS571-1	77272	76	66
114DS572-1	77272	76	147
114DS573-1	77272	76	135C
114DS573-1	77272	76	60C
114DS574-1	77272	76	151
114DS575-1	77272	76	65B
114DS575-1	77272	89	63
114DS575-2	77272	89	108
114DS575-3	77272	76	163A
114DS576-1	77272	76	168
114DS640-2	77272	88	40
114DS641-1	77272	88	44
114DS642-2	77272	76	66
114DS643-1	77272	88	66
114DS644-2	77272	88	70
114DS645-2	77272	88	84
114DS645-4	77272	88	84
114DS646-1	77272	88	80
114DS646-2	77272	88	80
114DS649-2	77272	88	2
114DS650-1	77272	88	47
114DS651-1	77272	88	76A
114DS651-3	77272	88	48A
114DS651-5	77272	83	217
114DS651-7	77272	81	95A
114DS652-1	77272	88	40
114DS653-1	77272	88	47
114DS661-1	77272	89	116
114DS662-1	77272	89	111
114DS663-1	77272	89	8
114DS664-1	77272	89	60
114DS666-2	77272	89	120
114DS667-1	77272	76	73
114DS668-1	77272	89	57
114DS669-1	77272	89	73
114DS669-2	77272	89	73
114DS670-1	77272	89	76
114D1001-10	77272	81	
114D1001-12	77272	81	
114D1001-13	77272	81	
114D1001-14	77272	81	
114D1001-15	77272	81	
114D1001-16	77272	81	
114D1001-17	77272	81	
114D1001-18	77272	81	
114D1001-19	77272	81	
114D1001-20	77272	81	
114D1001-21	77272	81	
114D1001-22	77272	81	
114D1001-23	77272	81	
114D1001-25	77272	81	
114D1001-26	77272	81	
114D1001-27	77272	81	

REFERENCE NUMBER	MFG CODE	FIG NUMBER	ITEM NUMBER
114D1001-28	77272	81	
114D1001-29	77272	81	
114D1001-30	77272	81	
114D1001-501	77272	81	
114D1001-502	77272	81	
114D1001-517	77272	81	
114D1001-518	77272	81	
114D1001-520	77272	81	
114D1001-521	77272	81	
114D1001-522	77272	81	
114D1001-523	77272	81	
114D1001-524	77272	81	
114D1001-525	77272	81	
114D1001-526	77272	81	
114D1001-527	77272	81	
114D1001-528	77272	81	
114D1001-529	77272	81	
114D1001-530	77272	81	
114D1001-531	77272	81	
114D1001-532	77272	81	
114D1001-534	77272	81	
114D1001-535	77272	81	
114D1001-550	77272	81	
114D1001-551	77272	81	
114D1001-552	77272	81	
114D1001-553	77272	81	
114D1042-4	77272	81	58A
114D1043-1	77272	81	186
114D1044-10	77272	81	96
114D1044-5	77272	81	96
114D1044-6	77272	81	96
114D1044-7	77272	81	96
114D1044-8	77272	81	96
114D1044-9	77272	81	96
114D1045-1	77272	81	63
114D1045-2	77272	81	71
114D1045-4	77272	81	63
114D1045-5	77272	81	71
114D1049-1	77272	81	156A
114D1049-2	77272	81	156A
114D1049-3	77272	81	156A
114D1050-1	77272	81	79A
114D1052-3	77272	81	72
114D1053-1	77272	81	184
114D1055-3	77272	81	92
114D1058-1	77272	81	152A
114D1059-1	77272	81	
114D1059-2	77272	81	174
114D1059-4	77272	81	
114D1059-5	77272	81	
114D1060-3	77272	81	164
114D1061-1	77272	81	188
114D1064-1	77272	81	20
114D1065-1	77272	81	170
114D1065-3	77272	81	170
114D1065-4	77272	81	170
114D1066-1	77272	81	181
114D1067-1	77272	81	192
114D1068-2	77272	81	191
114D1069-2	77272	81	150
114D1072-1	77272	81	167
114D1074-1	77272	81	86
114D1075-1	77272	81	90
114D1076-1	77272	81	176
114D1077-1	77272	81	114
114D1077-2	77272	83	265
114D1077-3	77272	91	16
114D1077-4	77272	80	23
114D1078-2	77272	81	88
114D1079-1	77272	81	83A
114D1080-1	77272	81	30
114D1080-1	77272	83	116
114D1081-1	77272	81	32
114D1081-2	77272	83	118
114D1082-2	77272	81	105
114D1082-2	77272	11C	34
114D1082-3	77272	81	104
114D1082-3	77272	11C	36
114D1083-1	77272	81	125
114D1084-1	77272	81	95
114D1085-2	77272	81	24
114D1085-3	77272	81	23A
114D1085-4	77272	81	25
114D1086-1	77272	81	51
114D1086-2	77272	81	51
114D1088-10	77272	81	128
114D1088-11	77272	81	
114D1088-12	77272	81	
114D1088-13	77272	81	128
114D1088-14	77272	81	
114D1088-15	77272	81	128
114D1088-4	77272	81	128
114D1088-6	77272	81	
114D1088-9	77272	81	
114D1089-10	77272	81	213
114D1089-3	77272	81	193A
114D1089-4	77272	81	213
114D1089-5	77272	81	193A
114D1089-6	77272	81	213
114D1089-9	77272	81	193A
114D1090-1	77272	81	13
114D1090-1	77272	81	14A
114D1091-2	77272	81	14
114D1096-2	77272	81	94
114D1097-1	77272	81	101
114D1097-1	77272	83	251
114D1103-1	77272	81	14B
114D1104-2	77272	76	10
114D1104-2	77272	81	8D
114D1105-1	77272	81	25A
114D1106-1	77272	81	166B
114D1108-1	77272	81	125
114D1108-10	77272	81	127
114D1108-10	77272	83	339
114D1108-11	77272	88	30
114D1108-12	77272	76	46
114D1108-13	77272	91	15
114D1108-17	77272	88	29
114D1108-18	77272	76	44
114D1108-19	77272	88	99
114D1108-2	77272	80	14
114D1108-2	77272	80	5
114D1108-2	77272	81	210
114D1108-2	77272	83	141
114D1108-20	77272	89	123
114D1108-21	77272	80	12
114D1108-22	77272	76	44
114D1108-23	77272	76	46C
114D1108-24	77272	89	33
114D1108-25	77272	89	80
114D1108-26	77272	76	46A
114D1108-27	77272	89	34
114D1108-3	77272	81	70
114D1108-3	77272	83	204
114D1108-4	77272	81	68
114D1108-4	77272	83	206
114D1108-5	77272	76	142
114D1108-5	77272	76	142D
114D1108-5	77272	83	173
114D1108-5	77272	92	27B
114D1108-5	77272	92	81B
114D1108-6	77272	83	172

REFERENCE NUMBER	MFG CODE	FIG NUMBER	ITEM NUMBER
114D1108-6	77272	83	353
114D1108-7	77272	80	12
114D1108-7	77272	81	212
114D1108-8	77272	83	308
114D1108-9	77272	80	16
114D1108-9	77272	80	3
114D1108-9	77272	83	338
114D1108-9	77272	88	59
114D1109-1	77272	81	84A
114D1109-1	77272	83	214
114D1110-1	77272	81	84
114D1110-1	77272	83	213
114D1111-1	77272	81	88
114D1111-2	77272	81	92
114D1112-1	77272	81	90
114D1113-1	77272	81	86
114D1114-1	77272	83	205
114D1114-2	77272	81	68A
114D1200-1	77272	81	
114D1200-2	77272	81	
114D1200-3	77272	81	
114D1200-4	77272	81	
114D1200-5	77272	81	
114D1200-6	77272	81	
114D1200-7	77272	81	
114D1243-1	77272	81	186
114D1243-2	77272	81	186
114D1243-3	77272	81	186
114D1244-1	77272	81	184
114D1245-1	77272	81	164
114D1245-3	77272	81	164
114D1246-1	77272	81	163
114D1246-1	77272	91	24
114D1247-1	77272	81	164
114D2001-1	77272	83	
114D2001-12	77272	83	
114D2001-13	77272	83	
114D2001-14	77272	83	
114D2001-15	77272	83	
114D2001-16	77272	83	
114D2001-17	77272	83	
114D2001-18	77272	83	
114D2001-19	77272	83	
114D2001-20	77272	83	
114D2001-21	77272	83	
114D2001-22	77272	83	
114D2001-23	77272	83	
114D2001-24	77272	83	
114D2001-25	77272	83	
114D2001-26	77272	83	
114D2001-27	77272	83	
114D2001-28	77272	83	
114D2001-29	77272	83	
114D2001-30	77272	83	
114D2001-501	77272	83	
114D2001-502	77272	83	
114D2001-518	77272	83	
114D2001-519	77272	83	
114D2001-522	77272	83	
114D2001-523	77272	83	
114D2001-524	77272	83	
114D2001-525	77272	83	
114D2001-526	77272	83	
114D2001-527	77272	83	
114D2001-528	77272	83	
114D2001-529	77272	83	
114D2001-530	77272	83	
114D2001-531	77272	83	
114D2001-532	77272	83	
114D2001-533	77272	83	
114D2001-534	77272	83	
114D2001-535	77272	83	
114D2001-536	77272	83	
114D2001-537	77272	83	
114D2001-538	77272	83	
114D2001-539	77272	83	
114D2001-555	77272	83	
114D2001-556	77272	83	
114D2001-557	77272	83	
114D2001-560	77272	83	
114D2001-7	77272	83	
114D2001-8	77272	83	
114D2001-9	77272	83	
114D2042-1	77272	83	96A
114D2042-5	77272	83	96A
114D2042-7	77272	83	96A
114D2043-4	77272	87	16A
114D2043-6	77272	87	16A
114D2044-4	77272	83	202A
114D2045-1	77272	83	216
114D2045-4	77272	83	216
114D2045-5	77272	83	216
114D2045-6	77272	83	216
114D2045-7	77272	83	216
114D2048-11	77272	83	353
114D2048-15	77272	81	127
114D2048-16	77272	88	30
114D2048-18	77272	76	46
114D2048-2	77272	81	70
114D2048-2	77272	83	204
114D2048-20	77272	80	5
114D2048-21	77272	80	3
114D2048-23	77272	80	12
114D2048-25	77272	91	15
114D2048-26	77272	80	16
114D2048-3	77272	81	68
114D2048-3	77272	83	206
114D2048-7	77272	81	212
114D2052-3	77272	83	211
114D2053-1	77272	83	225
114D2055-1	77272	83	133A
114D2056-1	77272	83	195
114D2059-3	77272	83	142
114D2060-2	77272	83	190
114D2061-1	77272	83	159
114D2062-1	77272	83	320A
114D2063-5	77272	83	313
114D2066-1	77272	83	321
114D2068-1	77272	83	299
114D2068-3	77272	83	299
114D2068-4	77272	83	299
114D2069-1	77272	83	304A
114D2071-1	77272	83	290
114D2071-3	77272	81	148
114D2071-3	77272	83	290
114D2072-1	77272	81	136
114D2072-1	77272	83	267
114D2072-2	77272	83	274
114D2073-1	77272	83	287
114D2073-2	77272	81	145
114D2073-2	77272	83	287
114D2077-1	77272	81	141
114D2077-1	77272	83	273
114D2080-3	77272	83	283
114D2080-6	77272	83	283
114D2082-1	77272	83	281
114D2086-3	77272	81	133A
114D2086-3	77272	83	293
114D2088-1	77272	83	253
114D2088-3	77272	83	253
114D2089-1	77272	83	235
114D2089-3	77272	83	235

REFERENCE NUMBER	MFG CODE	FIG NUMBER	ITEM NUMBER	REFERENCE NUMBER	MFG CODE	FIG NUMBER	ITEM NUMBER
114D2089-4	77272	83	235	114D2146-2	77272	83	228
114D2089-5	77272	83	235	114D2147-1	77272	83	220
114D2090-1	77272	83	322	114D2149-1	77272	83	332
114D2091-1	77272	83	349	114D2150-1	77272	83	341
114D2091-5	77272	83	349	114D2151-3	77272	83	123
114D2093-1	77272	83	344	114D2152-2	77272	83	122
114D2093-3	77272	83	344	114D2153-1	77272	83	366
114D2093-4	77272	83	344	114D2154-1	77272	83	46
114D2094-1	77272	83	336	114D2155-1	77272	83	45
114D2094-2	77272	83		114D2156-1	77272	83	47
114D2095-1	77272	83	333	114D2157-2	77272	83	370
114D2099-1	77272	83	347	114D2158-2	77272	83	275
114D2099-2	77272	83	347	114D2158-3	77272	81	137
114D2100-1	77272	83	343	114D2158-3	77272	83	268
114D2100-2	77272	83	343	114D2159-1	77272	87	33
114D2101-1	77272	83	326	114D2161-1	77272	83	161
114D2103-3	77272	83	329	114D2162-1	77272	81	1
114D2104-2	77272	83	314	114D2162-1	77272	KITS	
114D2105-1	77272	83	77	114D2162-2	77272	83	1
114D2105-2	77272	83	77	114D2162-2	77272	KITS	
114D2105-3	77272	83	77	114D2163-1	77272	81	3
114D2106-1	77272	83	78	114D2163-1	77272	83	2A
114D2107-1	77272	83	85	114D2163-1	77272	KITS	
114D2108-1	77272	83	88	114D2163-2	77272	83	2A
114D2109-1	77272	83	81	114D2164-1	77272	83	54
114D2110-1	77272	83	72	114D2166-1	77272	83	252A
114D2111-1	77272	83	196	114D2166-11	77272	83	252A
114D2112-4	77272	87	3	114D2166-3	77272	83	252A
114D2113-2	77272	81	134	114D2166-7	77272	83	252A
114D2113-2	77272	83	295	114D2166-9	77272	83	252A
114D2115-1	77272	81	50	114D2167-1	77272	83	350
114D2115-1	77272	83	53	114D2167-10	77272	83	
114D2116-4	77272	83	192	114D2167-2	77272	83	
114D2117-5	77272	83	194	114D2167-3	77272	83	350
114D2118-2	77272	83	197	114D2167-4	77272	83	
114D2119-1	77272	83	188	114D2167-6	77272	83	350
114D2122-1	77272	87	35	114D2167-7	77272	83	
114D2122-2	77272	80	26	114D2167-9	77272	83	350
114D2123-1	77272	83	276	114D2168-1	77272	83	280
114D2123-3	77272	83	276	114D2168-2	77272	83	280
114D2123-4	77272	83	276	114D2169-1	77272	83	149
114D2125-1	77272	83	10	114D2170-1	77272	83	138A
114D2125-1	77272	83	19	114D2171-2	77272	83	146
114D2126-1	77272	80	9	114D2172-1	77272	83	160
114D2126-1	77272	87	34	114D2173-2	77272	83	221
114D2127-3	77272	83	223	114D2174-2	77272	83	237
114D2132-1	77272	83	69	114D2175-1	77272	83	246
114D2133-1	77272	83	43	114D2176-1	77272	83	52
114D2134-1	77272	83	193	114D2177-2	77272	83	260
114D2134-2	77272	83	148	114D2178-1	77272	83	66
114D2134-3	77272	83	345	114D2180-4	77272	83	170A
114D2134-4	77272	83	87	114D2181-3	77272	83	124
114D2134-5	77272	83	68	114D2184-1	77272	81	144
114D2134-5	77272	83	71	114D2184-1	77272	83	288
114D2134-5	77272	83	84	114D2184-2	77272	83	281
114D2134-6	77272	83	87	114D2186-2	77272	83	271
114D2134-7	77272	83	68	114D2188-1	77272	83	102
114D2134-7	77272	83	71	114D2189-1	77272	83	238
114D2134-7	77272	83	84	114D2190-1	77272	83	78
114D2135-1	77272	83	76	114D2190-2	77272	83	78
114D2136-2	77272	83	121	114D2191-1	77272	83	228
114D2139-1	77272	83	65	114D2191-2	77272	83	223
114D2139-1	77272	87		114D2192-1	77272	83	225
114D2139-2	77272	83	65	114D2193-1	77272	83	229
114D2139-2	77272	87		114D2200-1	77272	83	
114D2139-3	77272	83	65	114D2200-2	77272	83	
114D2139-3	77272	87		114D2200-3	77272	83	
114D2140-1	77272	83	356	114D2200-5	77272	83	
114D2141-1	77272	83	182	114D2200-6	77272	83	
114D2142-1	77272	83	178	114D2200-7	77272	83	
114D2145-1	77272	83	229	114D2200-8	77272	83	

REFERENCE NUMBER	MFG CODE	FIG NUMBER	ITEM NUMBER	REFERENCE NUMBER	MFG CODE	FIG NUMBER	ITEM NUMBER
114D2200-9	77272	83		114D3053-1	77272	92	100
114D2249-1	77272	83		114D3053-1	77272	92	100A
114D2250-1	77272	83	321	114D3053-1	77272	92	14C
114D2250-2	77272	83	321	114D3053-1	77272	92	15B
114D2250-3	77272	83	321	114D3053-1	77272	92	56
114D2252-1	77272	81	141	114D3053-1	77272	92	56A
114D2252-1	77272	83	273	114D3053-1	77272	92	72
114D2252-2	77272	81	141	114D3053-1	77272	92	72A
114D2252-2	77272	83	273	114D3053-2	77272	92	11
114D2252-3	77272	81	141	114D3053-2	77272	92	25
114D2252-3	77272	83	273	114D3053-2	77272	92	49
114D2254-1	77272	83	320A	114D3053-2	77272	92	66
114D2255-1	77272	81	185	114D3053-2	77272	92	96
114D2255-1	77272	83	320	114D3053-2	77272	KITS	
114D2256-1	77272	81	144	114D3053-3	77272	90	3
114D2256-1	77272	83	288	114D3053-3	77272	KITS	
114D3002-3	77272	91		114D3053-4	77272	90	11
114D3002-4	77272	91		114D3053-4	77272	90	11A
114D3002-5	77272	91		114D3053-6	77272	93	2
114D3002-6	77272	91		114D3053-6	77272	93	5
114D3002-7	77272	91		114D3053-7	77272	93	9
114D3002-8	77272	91		114D3053-8	77272	92	42
114D3003-1	77272	90		114D3053-8	77272	92	42A
114D3003-2	77272	90	7A	114D3058-1	77272	92	26
114D3003-3	77272	90	7B	114D3058-1	77272	92	80
114D3004-2	77272	93	1	114D3059-3	77272	92	36
114D3040-1	77272	76	133	114D3059-3	77272	92	90
114D3044-1	77272	76	130B	114D3060-6	77272	92	43
114D3044-1	77272	92	10	114D3062-1	77272	92	4
114D3044-1	77272	92	14B	114D3062-1	77272	92	62
114D3044-1	77272	92	15A	114D3062-1	77272	KITS	
114D3044-1	77272	92	24	114D3063-1	77272	92	57
114D3044-1	77272	92	41	114D3065-1	77272	92	52A
114D3044-1	77272	92	41A	114D3065-1DYBA1	77272	A38	3
114D3044-1	77272	92	47	114D3066-1	77272	76	129
114D3044-1	77272	92	55	114D3067-3	77272	92	38A
114D3044-1	77272	92	55A	114D3070-2	77272	92	88
114D3044-1	77272	92	65	114D3070-5	77272	92	66A
114D3044-1	77272	92	71	114D3070-6	77272	92	66A
114D3044-1	77272	92	71A	114D3071-1	77272	92	103
114D3044-1	77272	92	94	114D3071-2	77272	92	106
114D3044-1	77272	92	99	114D3071-2	77272	92	89
114D3044-1	77272	92	99A	114D3072-1	77272	92	92A
114D3044-2	77272	90	10	114D3072-2	77272	92	96A
114D3044-2	77272	90	10A	114D3073-1	77272	91	30
114D3044-2	77272	90	2	114D3100-1	77272	91	25
114D3044-3	77272	93	10	114D3100-6	77272	91	25
114D3044-3	77272	93	3	114D3101-1	77272	81	163
114D3044-3	77272	93	7	114D3101-1	77272	91	24
114D3045-1	77272	92	101	114D3102-1	77272	91	11A
114D3046-1	77272	92	49A	114D3102-5	77272	91	11A
114D3046-2	77272	92	50	114D3107-1	77272	91	23
114D3046DYBA15	77272	A7	3	114D3108-1	77272	91	26
114D3047-1	77272	92	104	114D3109-4	77272	91	27
114D3047-1	77272	92	37	114D3110-1	77272	91	28
114D3047-1	77272	92	51	114D3111-1	77272	91	29
114D3047-1	77272	92	91	114D3112-1	77272	91	21
114D3048-2	77272	92	34	114D3113-1	77272	91	23
114D3048-3	77272	92	35	114D3113-2	77272	91	23
114D3048-4	77272	92	13A	114D3113-4	77272	91	23
114D3048-4	77272	92	68A	114D3114-1	77272	91	16A
114D3048-4DYBA1	77272	A38	4	114D3115-1	77272	91	16B
114D3048-6	77272	92	11A	114D3200-1	77272	90	13
114D3048-7	77272	92	11A	114D3203-1	77272	90	4
114D3049-3	77272	92	15C	114D3203-2	77272	90	7
114D3049-3	77272	92	73	114D3204-1	77272	90	6
114D3050-1	77272	92	29	114D3205-1	77272	90	12
114D3050-1	77272	92	83	114D3207-1	77272	90	16
114D3051-1	77272	92	33	114D3207-2	77272	90	
114D3051-1	77272	92	87	114D3207-3	77272	92	13
114D3053-1	77272	76	130	114D3207-3	77272	92	68

REFERENCE NUMBER	MFG CODE	FIG NUMBER	ITEM NUMBER
114D3240-1	77272	92	101
114D3241-1	77272	92	92A
114D3241-2	77272	92	96A
114D3242-2	77272	92	57
114D3243-1	77272	92	52A
114D3244-1	77272	90	12
114D3244-3	77272	90	12
114D3245-1	77272	90	13
114D3246-2	77272	90	7
114D3247-1	77272	90	
114D3247-2	77272	90	7A
114D3247-3	77272	90	7B
114D3248-2	77272	91	26
114D3249-1	77272	91	26
114D3250-1	77272	91	
114D3251-1	77272	90	16
114D3300-1	77272	93	8
114D3303-3	77272	93	15C
114D3303-4	77272	93	15
114D3304-1	77272	93	15A
114D3400-1	77272	76	133
114D3401-1	77272	76	129
114D4001-1	77272	95	
114D4001-13	77272	95	117
114D4001-17	77272	95	120
114D4001-2	77272	95	
114D4001-3	77272	95	
114D4001-4	77272	95	
114D4001-5	77272	95	115
114D4001-5	77272	95	115A
114D4001-9	77272	95	119
114D4040-21	77272	95	162
114D4040-31	77272	95	131
114D4040-33	77272	95	132
114D4040-37	77272	95	127
114D4040-39	77272	95	126
114D4040-41	77272	95	128
114D4040-43	77272	95	129
114D4040-45	77272	95	35
114D4040-49	77272	95	30
114D4040-51	77272	95	16
114D4040-53	77272	95	17
114D4040-55	77272	95	32
114D4040-57	77272	95	31
114D4040-59	77272	95	36
114D4040-61	77272	95	35
114D4040-63	77272	95	164
114D4040-65	77272	95	159
114D4040-67	77272	95	17
114D4040-69	77272	95	16
114D4040-7	77272	95	31
114D4040-71	77272	95	131
114D4042-1	77272	95	20
114D4042-1	77272	95	25
114D4043-1	77272	93	27
114D4044-31	77272	95	54
114D4044-62	77272	QC1	174
114D4044-63	77272	95	45
114D4044-63	77272	QC1	175
114D4044-73	77272	95	45
114D4044-74	77272	95	67
114D4044-75	77272	95	18
114D4044-76	77272	95	136
114D4044-77	77272	95	69
114D4044-78	77272	95	68
114D4044-79	77272	95	63
114D4044-80	77272	95	62
114D4044-81	77272	95	74
114D4044-82	77272	95	69
114D4045-1	77272	95	118
114D4045-2	77272	95	116

REFERENCE NUMBER	MFG CODE	FIG NUMBER	ITEM NUMBER
114D5001-13	77272	76	
114D5001-16	77272	76	
114D5001-17	77272	76	
114D5001-18	77272	76	
114D5001-19	77272	76	
114D5001-20	77272	76	
114D5001-21	77272	76	
114D5040-1	77272	80	10A
114D5040-2	77272	80	25
114D5041-1	77272	80	18
114D5041-2	77272	80	8
114D5042-1	77272	76	89
114D5042-1	77272	80	
114D5043-1	77272	76	139A
114D5045-6	77272	76	38B
114D5046-4	77272	76	57A
114D5047-7	77272	76	65
114D5048-2	77272	76	98
114D5049-2	77272	76	97
114D5051-4	77272	76	67
114D5055-2	77272	76	52
114D5056-1	77272	76	165C
114D5057-1	77272	76	101
114D5058-5	77272	76	165D
114D5059-1	77272	76	99
114D5060-2	77272	76	148
114D5063-1	77272	76	149
114D5065-1	77272	76	146
114D5067-2	77272	76	143A
114D5068-5	77272	76	154
114D5069-1	77272	76	100
114D5070-1	77272	76	95
114D5071-4	77272	76	71
114D5072-1	77272	76	94
114D5073-3	77272	76	93
114D5074-3	77272	76	174
114D5075-1	77272	80	24
114D5076-1	77272	76	172
114D5077-1	77272	76	170A
114D5078-1	77272	76	157B
114D5079-1	77272	76	158
114D5080-1	77272	76	85A
114D5081-1	77272	76	161
114D5085-1	77272	76	163
114D5086-1	77272	76	121A
114D5087-1	77272	76	119C
114D5094-3	77272	76	3
114D5101-1	77272	76	82A
114D5102-1	77272	76	79A
114D5103-2	77272	76	40A
114D5106-2	77272	76	14
114D5106-4	77272	76	15
114D5106-5	77272	76	13
114D5107-1	77272	76	155
114D5107-1	77272	76	166
114D5108-1	77272	76	176A
114D5109-1	77272	76	35
114D5109-2	77272	76	34
114D5109-7	77272	76	179
114D5110-1	77272	76	55A
114D5110-4	77272	76	178B
114D5111-1	77272	76	63
114D5112-3		76	164
114D5112-4	77272	76	164
114D5116-1	77272	76	161A
114D5117-2	77272	76	68
114D5118-1	77272	76	110
114D5118-2	77272	76	110A
114D5119-1	77272	76	65A
114D5120-1	77272	76	117
114D5120-1	77272	76	21B

REFERENCE NUMBER	MFG CODE	FIG NUMBER	ITEM NUMBER
114D5122-5	77272	76	30A
114D5123-2	77272	76	74
114D5124-1	77272	76	16
114D5129-1	77272	76	94A
114D5134-1	77272	76	6
114D5136-1	77272	76	9
114D5137-1	77272	76	32A
114D5138-1	77272	76	63B
114D5138-1	77272	89	52
114D5139-1	77272	76	64
114D5139-1	77272	89	53
114D5140-1	77272	76	71
114D5140-2	77272	76	67
114D5141-1	77272	76	127A
114D5200-1	77272	76	
114D5200-2	77272	76	
114D5240-1	77272	80	10A
114D5242-1	77272	76	89
114D5242-1	77272	80	
114D5243-7	77272	76	142C
114D5243-8	77272	76	142C
114D5244-3	77272	76	165C
114D5245-5	77272	76	65
114D5246-4	77272	76	164
114D5247-5	77272	76	165D
114D5248-1	77272	76	180
114D5249-1	77272	76	55D
114D5250-1	77272	76	57B
114D5251-1	77272	76	38B
114D5253-1	77272	76	149
114D5254-1	77272	76	68
114D5255-1	77272	76	65A
114D5258-1	77272	76	148
114D5259-1	77272	76	74
114D5260-1	77272	76	146C
114D5261-1	77272	76	51A
114D5261-1	77272	89	87
114D5262-1	77272	76	72C
114D5262-2	77272	76	58C
114D5263-3	77272	76	98
114D5263-4	77272	76	101
114D5265-1	77272	76	168A
114D5267-1	77272	76	72F
114D5268-1	77272	76	127B
114D5270-1	77272	76	144D
114D5271-1	77272	76	144F
114D5272-1	77272	76	144B
114D5273-1	77272	76	144C
114D6001-10	77272	88	
114D6001-11	77272	88	
114D6001-12	77272	88	
114D6001-13	77272	88	
114D6001-14	77272	88	
114D6001-15	77272	88	
114D6001-16	77272	88	
114D6001-17	77272	88	
114D6001-18	77272	88	
114D6001-19	77272	88	
114D6001-20	77272	88	
114D6001-20	77272	QC1	172
114D6001-501	77272	88	
114D6001-502	77272	88	
114D6001-503	77272	88	
114D6001-505	77272	88	
114D6001-506	77272	88	
114D6001-6	77272	88	
114D6001-7	77272	88	
114D6001-8	77272	88	
114D6001-9	77272	88	
114D6041-1	77272	88	
114D6041-2	77272	88	100B
114D6041-4	77272	88	
114D6041-6	77272	88	
114D6041-8	77272	88	
114D6042-4	77272	88	28A
114D6042-6	77272	88	28A
114D6042-8	77272	88	28B
114D6043-4	77272	88	23
114D6043-5	77272	88	23
114D6044-10	77272	88	47C
114D6044-11	77272	88	48
114D6044-5	77272	88	47C
114D6044-6	77272	88	47C
114D6044-8	77272	88	47C
114D6044-9	77272	88	47C
114D6045-1	77272	88	37
114D6046-2	77272	88	17
114D6048-4	77272	88	41
114D6055-3	77272	88	34
114D6056-1	77272	88	71
114D6059-1	77272	88	57A
114D6059-2	77272	88	62
114D6060-1	77272	88	67
114D6061-3	77272	88	69
114D6065-1	77272	88	82
114D6065-3	77272	88	82
114D6067-1	77272	88	78
114D6071-1	77272	88	38
114D6071-1	77272	88	77
114D6072-1	77272	88	50A
114D6072-2	77272	88	52
114D6072-4	77272	88	50A
114D6072-5	77272	88	52
114D6072-6	77272	88	50A
114D6072-7	77272	88	52
114D6073-1	77272	88	54
114D6074-1	77272	88	81
114D6074-2	77272	88	81
114D6075-2	77272	88	63
114D6077-1	77272	88	72
114D6078-1	77272	88	64
114D6078-2	77272	83	108
114D6078-3	77272	81	157
114D6078-4	77272	81	158
114D6078-5	77272	83	226
114D6078-6	77272	83	230
114D6078-7	77272	81	131
114D6078-7	77272	83	266
114D6078-7	77272	83	294
114D6079-1	77272	88	92
114D6079-1	77272	89	124
114D6080-1	77272	88	84A
114D6080-2	77272	88	84B
114D6080-8	77272	88	84B
114D6080-9	77272	88	84F
114D6081-1	77272	88	25
114D6082-1	77272	88	85
114D6083-1	77272	88	86
114D6084-1	77272	88	74
114D6084-3	77272	88	74
114D6084-4	77272	88	74
114D6084-5	77272	88	74
114D6084-6	77272	88	74
114D6085-2	77272	88	42
114D6085-3	77272	88	42
114D6086-1	77272	88	75
114D6086-2	77272	88	75
114D6086-3	77272	88	75
114D6087-1	77272	88	76
114D6087-2	77272	88	76
114D6088-1	77272	88	29
114D6088-2	77272	76	44

REFERENCE NUMBER	MFG CODE	FIG NUMBER	ITEM NUMBER	REFERENCE NUMBER	MFG CODE	FIG NUMBER	ITEM NUMBER
114D6089-1	77272	88	47A	114D6270-2	77272	89	20A
114D6090-1	77272	88	84A	114D6270-3	77272	89	20
114D6090-5	77272	88	84A	114D6272-1	77272	89	100
114D6091-1	77272	88	37	114D6273-1	77272	89	41
114D6091-2	77272	88	37	114D6274-1	77272	89	91
114D6091-2	77272	QC1	181	114D6275-1	77272	95	48
114D6093-2	77272	88	98A	114D6276-1	77272	89	96
114D6094-1	77272	88	65A	114D6277-1	77272	89	97
114D6094-1	77272	89	71	114D6278-1	77272	89	133
114D6095-1	77272	88	39A	114D6279-1	77272	89	64A
114D6096-1	77272	88	39B	114EK122-5	77272	191	
114D6097-1	77272	88	65	114EK122-6	77272	191	
114D6097-1	77272	89	72	114EK150-3	77272	182	14
114D6098-1	77272	88	45	114EK184-2	77272	196	
114D6099-1	77272	88	41	114EK443-1	77272	KITS	
114D6101-1	77272	88	24B	114EK443-2	77272	KITS	
114D6102-1	77272	88	46A	114ES011-3	77272	37	39
114D6106-1	77272	89	131	114ES011-3	77272	37B	
114D6106-2	77272	89	131	114ES018-3	77272	36	4
114D6200-1	77272	89		114ES018-3	77272	36B	
114D6200-2	77272	89		114ES019-2	77272	36	6
114D6200-3	77272	89		114ES019-2	77272	36A	
114D6200-4	77272	89		114ES022-1	77272	39	1
114D6241-1	77272	89	121	114ES022-2	77272	39	2
114D6241-2	77272	89	128B	114ES022-3	77272	39	10
114D6242-1	77272	89	32	114ES022-30	77272	11	38
114D6242-2	77272	89		114ES022-31	77272	39	3
114D6242-2	77272	89	38A	114ES022-32	77272	39	9
114D6243-1	77272	89	27	114ES022-5	77272	39	6
114D6244-3	77272	89	61	114ES022-6	77272	39	5
114D6245-1	77272	89	106	114ES022-7	77272	39	7
114D6245-3	77272	89	106	114ES022-76	77272	39	4
114D6246-1	77272	89	107	114ES022-8	77272	39	8
114D6246-3	77272	89	107	114ES022-9	77272	39	11
114D6246-5	77272	89	107	114ES023-102	77272	41	2
114D6247-1	77272	89	79	114ES023-103	77272	41	1
114D6249-1	77272	89	74	114ES023-11	77272	41	32
114D6250-1	77272	89	64	114ES023-110	77272	41	51
114D6250-5	77272	89	64	114ES023-114	77272	41	45
114D6251-1	77272	89	101A	114ES023-115	77272	41	43
114D6251-2	77272	89	101A	114ES023-116	77272	41	41
114D6251-4	77272	89	101A	114ES023-117	77272	41	39
114D6252-1	77272	89	96	114ES023-118	77272	41	39
114D6252-6	77272	89	96	114ES023-119	77272	41	41
114D6253-1	77272	89	45	114ES023-12	77272	41	33
114D6255-1	77272	89	110	114ES023-120	77272	41	43
114D6256-1	77272	89	55	114ES023-121	77272	41	45
114D6257-1	77272	89	58	114ES023-122	77272	41	38
114D6260-2	77272	89	113	114ES023-123	77272	41	5
114D6261-1	77272	89	115	114ES023-124	77272	41	9
114D6262-1	77272	89	97	114ES023-125	77272	41	38
114D6262-6	77272	89	97	114ES023-126	77272	41	38
114D6262-8	77272	89	97	114ES023-127	77272	41	29
114D6263-1	77272	89	131	114ES023-128	77272	41	28
114D6263-2	77272	89	131	114ES023-129	77272	41	47
114D6264-1	77272	89	84	114ES023-13	77272	41	34
114D6264-11	77272	89	84	114ES023-131	77272	41	53
114D6264-12	77272	89	42	114ES023-133	77272	41	47
114D6264-13	77272	89	49	114ES023-137	77272	41	53
114D6264-14	77272	89	28	114ES023-138	77272	41	38
114D6264-15	77272	89	47	114ES023-139	77272	41	38
114D6264-16	77272	89	68	114ES023-14	77272	41	35
114D6264-17	77272	76	52	114ES023-142	77272	41	31
114D6264-19	77272	89	5	114ES023-145	77272	41	27
114D6264-21	97499	76	143B	114ES023-146	77272	41	44
114D6265-1	77272	89	109	114ES023-147	77272	41	44
114D6266-2	77272	89	112	114ES023-148	77272	41	39
114D6267-1	77272	89	119	114ES023-149	77272	41	29
114D6268-1	77272	89	46	114ES023-15	77272	41	25
114D6268-2	77272	89	48	114ES023-150	77272	41	30
114D6269-1	77272	89	4	114ES023-151	77272	41	32

REFERENCE NUMBER	MFG CODE	FIG NUMBER	ITEM NUMBER
114ES023-16	77272	41	27
114ES023-17	77272	41	24
114ES023-18	77272	41	23
114ES023-19	77272	41	26
114ES023-20	77272	41	22
114ES023-21	77272	41	18
114ES023-22	77272	41	21
114ES023-23	77272	41	20
114ES023-24	77272	41	19
114ES023-25	77272	41	14
114ES023-26	77272	41	10
114ES023-27	77272	41	15
114ES023-28	77272	41	11
114ES023-29	77272	41	16
114ES023-30	77272	41	12
114ES023-31	77272	41	17
114ES023-32	77272	41	13
114ES023-33	77272	41	28
114ES023-34	77272	41	38
114ES023-36	77272	41	40
114ES023-38	77272	41	42
114ES023-4	77272	41	51
114ES023-40	77272	41	44
114ES023-42	77272	41	36
114ES023-43	77272	41	46
114ES023-44	77272	41	46
114ES023-45	77272	41	37
114ES023-48	77272	41	40
114ES023-50	77272	41	42
114ES023-52	77272	41	44
114ES023-54	77272	41	10
114ES023-55	77272	41	7
114ES023-57	77272	41	4
114ES023-58	77272	41	3
114ES023-59	77272	41	6
114ES023-64	77272	41	8
114ES023-67	77272	41	9
114ES023-68	77272	41	29
114ES023-7	77272	41	
114ES023-9	77272	41	30
114ES025-1	77272	251	4
114ES026-1	77272	251	22
114ES100-1	77272	91	
114ES200-11	77272	182	60
114ES200-11	77272	182	7
114ES200-11	77272	202	
114ES200-3	77272	182	7
114ES200-3	77272	202	
114ES200-4	77272	157	25
114ES200-4	77272	158	58
114ES200-9	77272	182	60
114ES200-9	77272	182	7
114ES200-9	77272	202	
114ES204-1	77272	157	2
114ES204-1	77272	158	2
114ES207-1	77272	167	39
114ES208-1	77272	157	3
114ES208-1	77272	158	3
114ES208-1	77272	162	
114ES209-1	77272	167	33
114ES209-2	77272	167	34
114ES214-1	77272	182	8
114ES216-1	77272	182	
114ES216-1	77272	203	
114ES217-5	77272	182	12
114ES217-5	77272	183	
114ES218-1	77272	167	26
114ES218-2	77272	198	41
114ES219-1	77272	167	27
114ES219-1	77272	167	28
114ES224-1	77272	167	40
114ES224-2	77272	167	46
114ES224-3	77272	182	32
114ES224-3	77272	186A	
114ES224-4	77272	167	46
114ES225-1	77272	196	66
114ES225-1	77272	197	
114ES225-1	77272	204	27
114ES226-2	77272	196	29
114ES229-1	77272	62	64
114ES229-1	77272	QC1	143
114ES229-2	77272	62	65
114ES229-2	77272	QC1	144
114ES230-1	77272	204	
114ES231-1	77272	204	
114ES231-11	77272	218	59
114ES231-2	77272	204	
114ES231-3	77272	219	79
114ES231-3	77272	219A	189
114ES231-4	77272	218	59
114ES231-4	77272	219	79
114ES231-4	77272	219A	189
114ES231-5	77272	218	60
114ES231-8	77272	219	32
114ES231-8	77272	219A	95
114ES231-9	77272	219	32
114ES231-9	77272	219A	95
114ES233-10	77272	188	35
114ES233-9	77272	188	34
114ES235-1	77272	167	33
114ES235-4	77272	167	34
114ES235-4	77272	177	
114ES235-5	77272	167	33
114ES235-5	77272	173	
114ES236-1	77272	167	37
114ES236-2	77272	167	38
114ES236-3	77272	167	37
114ES236-3	77272	169	
114ES236-4	77272	167	38
114ES236-4	77272	176	
114ES237	77272	95	10
114ES237	77272	95	146
114ES237	77272	95	95
114ES237-1	77272	95	10
114ES237-1	77272	95	146
114ES237-1	77272	95	95
114ES237-2	77272	95	10
114ES237-2	77272	95	146
114ES237-2	77272	95	95
114ES238-1	77272	198	46
114ES239-1	77272	198	47
114ES243-1	77272	184	28
114ES246-1	77272	196	69
114ES247-1	77272	188	65
114ES247-1	77272	196	3C
114ES247-1	77272	204	33C
114ES247-1	77272	197A	
114ES247-3	77272	197A	1
114ES248-1	77272	182	60
114ES248-1	77272	182A	
114ES248-3	77272	182	60
114ES248-3	77272	182A	
114ES248-4	77272	182	60
114ES248-4	77272	182A	
114ES249-1	77272	195	43
114ES249-1	77272	195	8
114ES249-10	77272	195	43
114ES249-10	77272	195	8
114ES249-11	77272	191	12
114ES249-11	77272	191	44
114ES249-11	77272	195	43
114ES249-11	77272	195	8

REFERENCE NUMBER	MFG CODE	FIG NUMBER	ITEM NUMBER
114ES249-12	77272	191	13
114ES249-12	77272	195	9
114ES249-13	77272	191	17
114ES249-13	77272	194	
114ES249-13	77272	195	14
114ES249-2	77272	195	14
114ES249-4	77272	191	26
114ES249-4	77272	195	10
114ES249-5	77272	191	26
114ES249-5	77272	195	10
114ES249-7	77272	195	43
114ES249-7	77272	195	8
114ES249-9	77272	195	14
114ES250-1	77272	204	10
114ES250-2	77272	204	10
114ES250-2	77272	205	
114ES251-1	77272	62	
114ES251-2	77272	62	
114ES251-3	77272	62	
114ES251-4	77272	62	
114ES252-1	77272	62	
114ES252-2	77272	62	
114ES253-1	77272	62	
114ES253-2	77272	62	
114ES259-1	77272	191	30
114ES259-1	77272	195	33B
114ES261-1	77272	219	33
114ES261-1	77272	219	79A
114ES261-3	77272	218	57
114ES261-4	77272	218	58
114ES262-5	77272	206	3
114ES262-6	77272	206	2
114ES264-5	77272	206	5
114ES264-6	77272	206	1
114ES264-6	77272	206	4
114ES265-1	77272	204	34
114ES269-1	77272	QC1	180
114ES269-1	77272	196	16A
114ES270-2	77272	157	3
114ES270-2	77272	158	3
114ES271-1	77272	188	66
114ES271-2	77272	188	66
114ES272-11	77272	226	33
114ES272-7	77272	226	33
114ES272-8	77272	226	33
114ES272-9	77272	226	33
114ES273-4	77272	225	7
114ES274-1	77272	167	28
114ES274-2	77272	167	28
114ES274-4	77272	167	28
114ES281-1	77272	157	3
114ES281-1	77272	158	3
114ES282-1	77272	182	12
114ES282-1	77272	183A	
114ES283-1	77272	204	34
114ES283-1	77272	204A	
114ES284-1	77272	219A	188
114ES284-1	77272	219A	96
114ES284-2	77272	218	57
114ES285-1	77272	206	4
114ES521-1	77272	62	33
114ES521-2	77272	62	33
114ES521-2	77272	64	
114ES521-2	77272	QC1	25
114EZ139-12	77272	198	1
114E0001-1	77272	34	
114E0001-10	77272	34	
114E0001-11	77272	34	
114E0001-2	77272	34	
114E0001-3	77272	34	
114E0001-5	77272	34	
114E0001-6	77272	34	
114E0001-7	77272	34	
114E0001-9	77272	34	
114E1001-1	77272	158	1
114E1001-1	77272	182	1
114E1001-2	77272	158	1
114E1001-2	77272	182	1
114E1001-3	77272	158	1
114E1001-3	77272	182	1
114E1001-4	77272	158	1
114E1001-4	77272	182	1
114E1001-5	77272	158	1
114E1001-5	77272	182	1
114E1001-6	77272	158	1
114E1001-6	77272	182	1
114E1001-7	77272	158	1
114E1001-7	77272	182	1
114E1001-8	77272	158	1
114E1001-8	77272	182	1
114E1003-1	77272	157	1
114E1003-1	77272	182	2
114E1003-10	77272	157	1
114E1003-10	77272	182	2
114E1003-11	77272	157	1
114E1003-11	77272	182	2
114E1003-12	77272	157	1
114E1003-12	77272	182	2
114E1003-13	77272	157	1
114E1003-13	77272	182	2
114E1003-14	77272	157	1
114E1003-14	77272	182	2
114E1003-2	77272	157	1
114E1003-2	77272	182	2
114E1003-3	77272	157	1
114E1003-3	77272	182	2
114E1003-6	77272	157	1
114E1003-6	77272	182	2
114E1003-7	77272	157	1
114E1003-7	77272	182	2
114E1003-8	77272	157	1
114E1003-8	77272	182	2
114E1004-4	77272	158	18
114E1004-5	77272	157	78
114E1004-5	77272	158	70
114E1004-9	77272	157	26
114E1004-9	77272	158	59
114E1005-1	77272	167	1
114E1005-1	77272	182	3
114E1005-2	77272	167	1
114E1005-2	77272	182	3
114E1005-3	77272	167	1
114E1005-3	77272	182	3
114E1005-4	77272	167	1
114E1005-4	77272	182	3
114E1005-7	77272	167	1
114E1005-7	77272	182	3
114E1005-8	77272	167	1
114E1005-8	77272	182	3
114E1007-12	77272	167	50
114E1007-23	77272	182	
114E1010-1	77272	157	13
114E1010-1	77272	158	14
114E1021-1	77272	34	19
114E1021-1	77272	178	
114E1021-3	77272	34	56
114E1021-3	77272	178	
114E1021-7	77272	34	19
114E1021-7	77272	178	
114E1022-1	77272	178	65
114E1022-4	77272	178	100
114E1022-5	77272	178	108

REFERENCE NUMBER	MFG CODE	FIG NUMBER	ITEM NUMBER
114E1024-1	77272	34	13
114E1024-1	77272	179	
114E1024-11	77272	34	13
114E1024-11	77272	179	
114E1024-12	77272	34	13
114E1024-12	77272	179	
114E1024-13	77272	34	14
114E1024-13	77272	179	
114E1024-3	77272	34	14
114E1024-3	77272	179	
114E1025-1	77272	34	14
114E1025-1	77272	180	37
114E1026-1	77272	28	
114E1026-1	77272	34	
114E1042-100	77272	178	83
114E1042-102	77272	178	136
114E1042-11	77272	178	82
114E1042-13	77272	178	76
114E1042-15	77272	178	74
114E1042-17	77272	178	42
114E1042-19	77272	178	28
114E1042-21	77272	178	18
114E1042-23	77272	178	45
114E1042-25	77272	178	73
114E1042-27	77272	178	64
114E1042-29	77272	178	59
114E1042-3	77272	178	137
114E1042-301	77272	178	49
114E1042-303	77272	178	48
114E1042-305	77272	178	46
114E1042-307	77272	178	47
114E1042-31	77272	178	44
114E1042-310	77272	178	134
114E1042-33	77272	178	29
114E1042-35	77272	178	19
114E1042-37	77272	178	43
114E1042-41	77272	178	81
114E1042-415	77272	178	18
114E1042-417	77272	178	96
114E1042-423	77272	178	93
114E1042-425	77272	178	92
114E1042-427	77272	178	94
114E1042-429	77272	178	95
114E1042-53	77272	178	54
114E1042-55	77272	178	57
114E1042-57	77272	178	52
114E1042-59	77272	178	55
114E1042-61	77272	178	53
114E1042-63	77272	178	56
114E1042-65	77272	178	60
114E1042-67	77272	178	62
114E1042-73	77272	178	86
114E1042-75	77272	178	87
114E1042-77	77272	178	88
114E1042-79	77272	178	51
114E1042-81	77272	178	35
114E1042-83	77272	178	34
114E1042-85	77272	178	89
114E1042-87	77272	178	90
114E1042-89	77272	178	63
114E1042-91	77272	178	134
114E1042-93	77272	178	136
114E1042-95	77272	178	128
114E1042-97	77272	178	85
114E1042-99	77272	178	84
114E1043-1	77272	179	13
114E1043-13	77272	179	1
114E1043-15	77272	179	2
114E1043-17	77272	179	29
114E1043-19	77272	179	22
114E1043-201	77272	179	19
114E1043-202	77272	179	20
114E1043-203	77272	179	16
114E1043-204	77272	179	17
114E1043-21	77272	179	23
114E1043-23	77272	179	10
114E1043-3	77272	179	26
114E1043-5	77272	179	8
114E1043-7	77272	179	7
114E1043-86	77272	179	5
114E1043-87	77272	179	4
114E1043-88	77272	179	2
114E1043-89	77272	179	1
114E1043-9	77272	179	5
114E1044-1	77272	157	88
114E1044-1	77272	158	74
114E1046-1	77272	180	38
114E1047-1	77272	180	40
114E1048-1	77272	180	33
114E1048-10	77272	180	21
114E1048-11	77272	180	23
114E1048-12	77272	180	24
114E1048-13	77272	180	16
114E1048-14	77272	180	17
114E1048-15	77272	180	18
114E1048-16	77272	180	19
114E1048-2	77272	180	34
114E1048-21	77272	180	7
114E1048-22	77272	180	6
114E1048-23	77272	180	8
114E1048-24	77272	180	9
114E1048-25	77272	180	1
114E1048-26	77272	180	2
114E1048-27	77272	180	3
114E1048-28	77272	180	4
114E1048-3	77272	180	35
114E1048-4	77272	180	36
114E1048-5	77272	180	27
114E1048-57	77272	180	12
114E1048-59	77272	180	11
114E1048-6	77272	180	26
114E1048-61	77272	180	13
114E1048-63	77272	180	14
114E1048-65	77272	180	27
114E1048-66	77272	180	26
114E1048-67	77272	180	28
114E1048-68	77272	180	29
114E1048-7	77272	180	28
114E1048-8	77272	180	29
114E1048-9	77272	180	22
114E1050-10	77272	178	12
114E1052-2	77272	178	109
114E1052-3	77272	178	110
114E2000-1	77272	188	
114E2000-18	77272	188	
114E2000-19	77272	204	
114E2000-2	77272	204	
114E2000-20	77272	196	
114E2000-21	77272	196	
114E2000-3	77272	196	
114E2000-4	77272	196	
114E2003-1		204	
114E2003-3	77272	204	
114E2005-300	77272	204	
114E2005-304	77272	62	66
114E2005-304	77272	QC1	145
114E2005-359A	77272	204	10A
114E2005-711	77272	QC1	
114E2005-711	77272	BULK	
114E2005-712	77272	QC1	146
114E2005-712	77272	BULK	
114E2007-11	77272	157	65

REFERENCE NUMBER	MFG CODE	FIG NUMBER	ITEM NUMBER
114E2007-11	77272	158	62
114E2011-1	77272	204	
114E2011-10	77272	204	
114E2013-1	77272	204	
114E2013-2	77272	204	
114E2014-1	77272	196	
114E2015-1	77272	204	
114E2015-10	77272	204	
114E2015-3	77272	204	
114E2016-1	77272	204	
114E2017-1	77272	204	
114E2017-2	77272	204	
114E2019-1	77272	182	
114E2019-1	77272	188	1
114E2019-2	77272	182	
114E2019-2	77272	188	1
114E2019-3	77272	182	
114E2019-3	77272	188	1
114E2020-111	77272	182	35
114E2020-114	77272	182	
114E2020-115	77272	182	
114E2020-41	77272	182	39
114E2020-42	77272	182	
114E2020-43	77272	182	
114E2020-44	77272	182	
114E2020-45	77272	182	38
114E2020-46	77272	182	37
114E2020-47	77272	182	
114E2020-48	77272	182	
114E2020-49	77272	182	
114E2020-50	77272	182	
114E2020-51	77272	182	36
114E2020-78	77272	182	35
114E2020-90	77272	182	35
114E2021-1	77272	182	
114E2021-15	77272	182	
114E2021-16	77272	182	49
114E2021-20	77272	182	50
114E2021-207A	77272	182	
114E2021-21	77272	182	
114E2021-22	77272	182	
114E2021-23	77272	182	
114E2021-24	77272	182	
114E2021-25	77272	182	
114E2021-26	77272	182	
114E2021-28		182	54A
114E2021-29	77272	182	
114E2021-3	77272	182	41
114E2021-3	77272	182	6
114E2021-30	77272	182	
114E2021-32	77272	182	
114E2021-36	77272	182	24
114E2021-37	77272	182	
114E2021-8	77272	182	
114E2022-1	77272	182	9
114E2022-2	77272	182	
114E2022-3	77272	182	43
114E2024-3	77272	182	
114E2026-1	77272	11A	
114E2026-2	77272	11A	
114E2027-1	77272	11A	18
114E2028-10	77272	200	
114E2028-11	77272	200	
114E2028-12	77272	200	
114E2028-2	77272	200	
114E2028-3	77272	200	
114E2028-5	77272	200	
114E2028-6	77272	200	
114E2028-7	77272	200	
114E2028-9	77272	200	
114E2029-15	77272	200	19
114E2029-19	77272	200	22
114E2029-31	77272	200	23
114E2030-1	77272	188	2
114E2030-1	77272	200	
114E2030-2	77272	188	2
114E2030-2	77272	200	
114E2031-2	77272	228	
114E2031-7	77272	228	84
114E2031-8	77272	228	
114E2031-9	77272	228	82
114E2032-1	77272	188	3
114E2032-1	77272	228	
114E2032-3	77272	228	78
114E2032-4	77272	188	3
114E2032-4	77272	228	
114E2032-5	77272	228	78
114E2033-1	77272	199	6
114E2033-10	77272	199	6
114E2033-11	77272	199	
114E2033-2	77272	199	19
114E2035-10	77272	199	15
114E2035-10	77272	199	2
114E2035-10	77272	199	26
114E2035-11	77272	199	
114E2035-11	77272	199	27
114E2035-12	77272	199	16
114E2035-12	77272	199	29
114E2035-12	77272	199	3
114E2035-14	77272	199	17
114E2035-14	77272	199	4
114E2035-2	77272	199	
114E2035-2	77272	200	2
114E2035-21	77272	199	
114E2035-21	77272	200	1
114E2035-23	77272	199	
114E2035-23	77272	200	1
114E2035-24	77272	199	
114E2035-24	77272	200	3
114E2035-25	77272	199	
114E2035-25	77272	200	3
114E2035-26	77272	199	
114E2035-26	77272	200	3
114E2035-27	77272	199	
114E2035-27	77272	200	3
114E2035-29	77272	199	
114E2035-29	77272	200	3
114E2035-32	77272	199	
114E2035-32	77272	200	1
114E2035-36	77272	199	
114E2035-36	77272	200	2
114E2035-37	77272	199	
114E2035-37	77272	200	3
114E2035-7	77272	199	1
114E2035-7	77272	199	13
114E2035-7	77272	199	23
114E2035-8	77272	199	
114E2035-8	77272	199	14
114E2035-8	77272	199	24
114E2035-9	77272	199	
114E2035-9	77272	199	25
114E2036-1	77272	201	40
114E2036-2	77272	201	57
114E2036-3	77272	201	68
114E2038-2	77272	200	8
114E2038-2	77272	201	54
114E2038-3	77272	200	9
114E2038-3	77272	201	65
114E2038-5	77272	201	63
114E2038-6	77272	201	77
114E2038-7	77272	200	7
114E2038-7	77272	201	38

REFERENCE NUMBER	MFG CODE	FIG NUMBER	ITEM NUMBER
114E2039-5	77272	201	30
114E2039-6	77272	201	5
114E2039-7	77272	201	30
114E2041-10	77272	200	6
114E2041-10	77272	201	27
114E2041-7	77272	201	27
114E2041-8	77272	200	6
114E2041-8	77272	201	27
114E2041-9	77272	200	4
114E2041-9	77272	201	2
114E2042-4	77272	201	82
114E2042-7	77272	201	92
114E2042-8	77272	201	104
114E2044-1	77272	200	10
114E2044-1	77272	201	79
114E2044-4	77272	201	88
114E2044-5	77272	201	99
114E2044-6	77272	201	109
114E2044-8	77272	200	11
114E2044-8	77272	201	90
114E2044-9	77272	200	12
114E2044-9	77272	201	101
114E2045-7	77272	187	2
114E2045-7	77272	187	8
114E2045-8	77272	187	8
114E2045-9	77272	187	15
114E2047-10	77272	182	61
114E2047-10	77272	187	7
114E2047-11	77272	182	44
114E2047-11	77272	187	1
114E2047-12	77272	182	61
114E2047-12	77272	187	7
114E2047-13	77272	182	61
114E2047-13	77272	187	14
114E2047-9	77272	182	61
114E2047-9	77272	187	7
114E2048-1	77272	204	1B
114E2048-10	77272	204	9A
114E2048-11	77272	204	1B
114E2048-2	77272	204	
114E2048-3	77272	204	1D
114E2048-9	77272	204	9
114E2049-1	77272	204	
114E2049-2	77272	204	
114E2049-3	77272	204	
114E2049-4	77272	204	
114E2049-5	77272	204	
114E2049-6	77272	204	
114E2050-1	77272	62	
114E2050-3	77272	62	67
114E2050-3	77272	QC1	148
114E2051-1	77272	188	
114E2051-2	77272	188	
114E2052-1	77272	196	
114E2052-14	77272	83	36
114E2052-15	77272	83	37
114E2053-1	77272	188	
114E2053-6	77272	188	
114E2053-7	77272	188	
114E2054-1	77272	196	
114E2054-2	77272	196	
114E2055-3	77272	167	4
114E2055-6	77272	167	4
114E2056-1	77272	200	9A
114E2056-1	77272	201	66
114E2057-1	77272	167	10
114E2057-2	77272	167	10
114E2058-1	77272	196	3A
114E2058-2	77272	196	3
114E2058-3	77272	196	3B
114E2061-1	77272	188	
114E2061-2	77272	196	
114E2062-1	77272	188	
114E2062-2	77272	196	
114E2062-3	77272	196	
114E2065-1	77272	200	5
114E2065-1	77272	201	17
114E2066-1	77272	204	
114E2066-2	77272	196	
114E2066-3	77272	188	
114E2067-1	77272	196	
114E2068-1	77272	188	54
114E2068-2	77272	196	16
114E2071-5	77272	208	35A
114E2072-1	77272	204	
114E2072-1	77272	208	
114E2072-10	77272	208	
114E2072-11	77272	207	32
114E2072-11	77272	207	37
114E2072-11	77272	208	39
114E2072-2	77272	208	5
114E2072-3	77272	208	6
114E2072-4	77272	208	7
114E2072-5	77272	208	8
114E2072-6	77272	208	
114E2072-7	77272	208	9
114E2072-8	77272	208	10
114E2072-9	77272	208	
114E2074-1	77272	195	
114E2074-1	77272	204	
114E2074-10	77272	195	
114E2074-11	77272	191	34
114E2074-11	77272	195	33F
114E2074-12	77272	195	
114E2074-12	77272	204	
114E2074-15	77272	195	33F
114E2074-19	77272	195	
114E2074-19	77272	204	
114E2074-2	77272	195	
114E2074-20	77272	195	
114E2074-21	77272	195	
114E2074-3	77272	195	
114E2074-4	77272	195	33
114E2074-7	77272	191	29
114E2074-7	77272	195	33
114E2075-1	77272	196	
114E2076-1	77272	196	
114E2077-3	77272	196	22
114E2077-32	77272	196	
114E2077-35	77272	196	
114E2077-37	77272	196	
114E2077-39	77272	196	
114E2077-40	77272	196	
114E2077-41	77272	196	
114E2077-43	77272	196	
114E2078-12	77272	196	
114E2078-13	77272	196	
114E2078-21	77272	196	
114E2082-1	77272	188	
114E2082-13	77272	188	5
114E2082-26	77272	188	
114E2083-1	77272	188	
114E2083-2	77272	188	
114E2084-3	77272	201	52
114E2085-3	77272	200	7A
114E2085-3	77272	201	45
114E2090-1	77272	188	
114E2090-2	77272	188	
114E2090-4	77272	188	
114E2091-2	77272	182	62
114E2091-2	77272	187	26
114E2091-4	77272	182	62

REFERENCE NUMBER	MFG CODE	FIG NUMBER	ITEM NUMBER
114E2091-4	77272	187	26
114E2095-1	77272	200	5
114E2095-1	77272	201	17
114E2096-1	77272	201	24
114E2098-12	77272	199	
114E2098-12	77272	200	3
114E2098-13	77272	199	
114E2098-13	77272	200	2
114E2101-1	77272	182	
114E2101-2	77272	182	24
114E2101-5	77272	182	
114E2101-6	77272	182	
114E2101-7	77272	182	
114E2102-13	77272	204	22
114E2103-2	77272	204	
114E2103-3	77272	204	
114E2103-4	77272	204	
114E2103-6	77272	204	
114E2103-7	77272	204	
114E2103-8	77272	204	
114E2104-3	77272	204	
114E2104-4	77272	204	
114E2106-1	77272	188	
114E2107-1	77272	196	
114E2107-2	77272	196	
114E2107-3	77272	196	
114E2107-4	77272	196	
114E2107-5	77272	196	
114E2108-13	77272	188	17A
114E2108-16		188	17
114E2109-1	77272	188	
114E2110-1	77272	188	
114E2110-2	77272	188	
114E2111-10	77272	188	25
114E2111-3	77272	188	20
114E2111-7	77272	188	21
114E2112-1	77272	204	
114E2113-1	77272	196	
114E2114-1	77272	196	
114E2115-1	77272	204	
114E2116-1	77272	204	
114E2117-1	77272	188	
114E2118-1	77272	188	
114E2119-2	77272	204	
114E2119-3	77272	204	
114E2120-1	77272	196	
114E2122-1	77272	204	
114E2122-2	77272	204	
114E2122-3	77272	204	
114E2122-4	77272	204	
114E2123-14	77272	196	
114E2123-15	77272	188	
114E2123-17	77272	188	
114E2123-18	77272	196	48
114E2123-24	77272	188	
114E2123-25	77272	196	
114E2123-26	77272	196	
114E2123-29	77272	196	48
114E2123-30	77272	196	
114E2124-10	77272	33	34A
114E2124-5	77272	33	
114E2125-1	77272	44	
114E2125-2	77272	44	11A
114E2125-7	77272	44	11B
114E2126-1	77272	204	
114E2126-2	77272	204	
114E2127-1	77272	204	
114E2127-2	77272	204	
114E2128-1	77272	204	
114E2128-2	77272	196	
114E2128-3	77272	204	
114E2128-4	77272	196	68
114E2129-1	77272	188	
114E2131-1	77272	188	
114E2131-2	77272	188	
114E2134-10	77272	191	45
114E2134-11	77272	191	27
114E2136-1	77272	196	
114E2136-16	77272	196	
114E2136-17	77272	196	58
114E2136-7	77272	196	
114E2138-2	77272	204	
114E2138-3	77272	204	
114E2139-10	77272	198	2
114E2139-9	77272	198	1
114E2140-11	77272	198	
114E2140-32	77272	198	
114E2141-10	77272	198	
114E2141-11	77272	198	
114E2141-12	77272	198	
114E2141-13	77272	198	
114E2141-14	77272	198	
114E2141-15	77272	198	
114E2141-16	77272	198	
114E2141-17A	77272	198	
114E2141-21	77272	198	
114E2141-22	77272	198	
114E2141-31	77272	198	
114E2141-33	77272	198	
114E2141-68	77272	198	
114E2141-69	77272	198	
114E2141-70	77272	198	
114E2141-71	77272	198	
114E2141-72	77272	198	
114E2141-73	77272	198	
114E2141-74	77272	198	
114E2141-75	77272	198	
114E2141-76	77272	198	
114E2142-2	77272	188	55
114E2142-2	77272	198	
114E2142-4	77272	188	55
114E2142-4	77272	198	
114E2144-1	77272	188	
114E2148-1	77272	209	27
114E2148-15	77272	198	33
114E2148-17	77272	198	32
114E2148-2	77272	209	28
114E2148-3	77272	209	29
114E2148-4	77272	209	3
114E2148-5	77272	209	2
114E2148-6	77272	198	3
114E2148-8	77272	198	2A
114E2149-2	77272	209	26
114E2149-7	77272	209	24
114E2149-8	77272	209	26
114E2149-9	77272	209	25
114E2150-1	77272	209	37
114E2150-10	77272	209	18
114E2150-7	77272	209	20
114E2150-8	77272	209	19
114E2151-57	77272	209	
114E2151-78	77272	209	
114E2151-79	77272	209	
114E2151-80	77272	209	
114E2151-81	77272	209	
114E2151-82	77272	209	
114E2151-83	77272	209	
114E2151-84	77272	209	
114E2151-85	77272	209	
114E2151-86	77272	209	
114E2151-87	77272	209	
114E2151-88	77272	209	

REFERENCE NUMBER	MFG CODE	FIG NUMBER	ITEM NUMBER
114E2151-89	77272	209	
114E2152-1	77272	188	56
114E2152-1	77272	209	
114E2152-2	77272	188	56
114E2152-2	77272	209	
114E2152-3	77272	188	56
114E2152-3	77272	209	
114E2156-1	77272	204	
114E2156-1	77272	207	
114E2156-15	77272	207	7
114E2156-16	77272	207	22
114E2156-18	77272	207	1
114E2156-19	77272	207	2
114E2156-20	77272	207	3
114E2156-21	77272	207	18
114E2156-22	77272	207	19
114E2156-25	77272	207	28
114E2156-25	77272	208	29
114E2156-26	77272	207	27
114E2156-26	77272	208	30
114E2156-27	77272	207	
114E2156-27	77272	208	
114E2156-28	77272	207	16
114E2156-28	77272	208	18
114E2156-29	77272	207	24
114E2156-9	77272	207	21
114E2157-15	77272	207	38
114E2157-15	77272	208	44
114E2157-16	77272	204	
114E2157-16	77272	207	
114E2157-17	77272	204	
114E2157-17	77272	207	
114E2158-1	77272	207	31
114E2158-1	77272	207	36
114E2158-10	77272	208	43
114E2158-5	77272	208	42
114E2159-10	77272	207	29
114E2160-1	77272	45	18
114E2161-5	77272	45	20
114E2161-7	77272	45	24
114E2164-1	77272	204	
114E2165-1	77272	204	
114E2165-11	77272	191	
114E2165-12	77272	191	
114E2165-4	77272	191	
114E2165-4	77272	204	
114E2165-5	77272	191	
114E2165-6	77272	191	
114E2166-1	77272	188	
114E2166-1	77272	198	
114E2168-1	77272	188	
114E2169-1	77272	204	
114E2175-11	77272	188	62
114E2175-2	77272	188	59
114E2176-1	77272	188	
114E2177-1	77272	188	
114E2192-2	77272	188	
114E2192-3	77272	62	
114E2192-4	77272	188	
114E2192-5	77272	188	
114E2194-2	77272	187	
114E2195-3	77272	182	46
114E2195-3	77272	182	63
114E2195-3	77272	187	22
114E2201-1	77272	182	67
114E2201-1	77272	184	
114E2202-1	77272	184	5
114E2203-1	77272	184	52
114E2205-1	77272	184	29
114E2207-1	77272	184	46
114E2208-1	77272	184	25
114E2210-1	77272	184	26
114E2211-1	77272	184	21
114E2212-1	77272	184	22
114E2213-1	77272	184	18
114E2214-1	77272	184	23B
114E2216-1	77272	184	13
114E2217-1	77272	45	
114E2221-1	77272	184	11
114E2224-1	77272	184	12
114E2225-1	77272	184	51
114E2226-1	77272	184	
114E2227-1	77272	184	
114E2230-1	77272	184	23A
114E2231-1	77272	184	23
114E2232-1	77272	184	
114E2234-1	77272	184	
114E2235-1	77272	184	10
114E2511-1	77272	204	
114E2512-1	77272	269	2
114E2568-1	77272	QC1	
114E2568-1	77272	BULK	
114E2570-1	77272	62	
114E2570-1	77272	QC1	
114E2573-1	77272	204	
114E2580-1	77272	62	
114E2581-1	77272	62	
114E2581-5	77272	62	
114E2583-5	77272	62	
114E3000-1	77272	275	
114E3000-2	77272	275	
114E3000-3	77272	275	
114E3002-14	77272	275	
114E3002-7	77272	275	
114E3006-1	77272	279	
114E3006-2	77272	279	6
114E3006-3	77272	279	5
114E3006-30	77272	279	
114E3006-31	77272	276	3
114E3006-32	77272	279	1
114E3006-34	77272	279	3
114E3006-35	77272	279	4
114E3006-37	77272	279	6
114E3006-38	77272	279	8
114E3006-4	77272	279	4
114E3006-40	77272	279	7
114E3006-5	77272	279	3
114E3006-6	77272	279	2
114E3006-7	77272	279	1
114E3006-79	77272	275	
114E3006-80	77272	277	32
114E3006-80	77272	279	
114E3006-81	77272	279	2
114E3006-87	77272	279	8
114E3006-88	77272	279	7
114E3006-89	77272	279	6
114E3006-91	77272	279	4
114E3006-92	77272	279	3
114E3006-93	77272	279	2
114E3007-1	77272	275	9
114E3007-1	77272	279	
114E3007-2	77272	275	
114E3007-2	77272	279	
114E3007-3	77272	275	
114E3007-3	77272	279	
114E3008-1	77272	275	
114E3008-2	77272	275	1
114E3008-3	77272	275	1
114E3008-4	77272	275	1
114E3010-2	77272	275	18
114E3012-1	77272	275	2
114E3012-2	77272	275	3

REFERENCE NUMBER	MFG CODE	FIG NUMBER	ITEM NUMBER
114E3012-4	77272	275	
114E3012-5	77272	275	
114E3014-1	77272	275	4
114E3014-2	77272	275	
114E3014-3	77272	275	
114E3015-1	77272	275	20
114E3019-1	77272	275	5
114E3024-13	77272	275	
114E3024-15	77272	275	10
114E3025-1	77272	187	33
114E3025-3	77272	182	
114E3025-4	77272	187	48
114E3026-1	77272	182	
114E3026-1	77272	187	32
114E3026-1	77272	187	41
114E3026-1	77272	187	47
114E3027-1	77272	182	20
114E3027-1	77272	187	31
114E3027-4	77272	182	51
114E3027-4	77272	187	40
114E3027-5	77272	182	68
114E3027-5	77272	187	46
114E3033-1	77272	275	11
114E3033-4	77272	275	
114E3034-1	77272	275	6
114E3034-13	77272	275	7
114E3036-5	77272	277	
114E3037-1	77272	275	12
114E3037-2	77272	275	13
114E3037-3	77272	275	
114E3039-101	77272	275	
114E3039-103	77272	275	
114E3039-114	77272	275	
114E3039-37	77272	275	
114E3039-51	77272	275	
114E3039-52	77272	275	
114E3039-53	77272	275	
114E3039-55	77272	275	
114E3039-56	77272	275	
114E3039-87	77272	275	
114E3040-1	77272	275	7
114E3040-4	77272	275	7
114E3041-1	77272	275	15
114E3041-4	77272	275	
114E3041-5	77272	275	
114E3043-1	77272	275	16
114E3043-2	77272	275	
114E3045-1	77272	275	17
114E3045-4	77272	275	
114E3045-5	77272	275	
114E3048-1	77272	204	
114E3048-1	77272	275	
114E3048-1	77272	275	
114E3051-1	77272	275	
114E3051-1	77272	279	
114E3051-2	77272	275	
114E3051-2	77272	279	
114E3052-1	77272	275	
114E3052-2	77272	275	
114E3055-1	77272	275	21
114E3055-24	77272	275	21
114E3056-1	77272	279	1
114E3056-2	77272	279	2
114E3056-3	77272	279	1
114E3056-4	77272	279	4
114E3056-41	77272	279	1
114E3056-42	77272	279	2
114E3056-44	77272	279	4
114E3056-5	77272	275	
114E3056-5	77272	279	1
114E3056-6	77272	279	6
114E3056-7	77272	279	7
114E3056-8	77272	279	8
114E3059-1	77272	275	
114E3061-1	77272	275	
114E3061-2	77272	275	
114E3065-1	77272	275	19
114E3065-6	77272	275	
114E3065-8	77272	275	
114E3066-1	77272	275	
114E3066-2	77272	275	
114E3066-3	77272	275	
114E3075-1	77272	275	
114E3076-1	77272	275	
114E3076-2	77272	275	
114E3082-1	77272	275	
114E3082-5	77272	279	6
114E3084-3	77272	279	4
114E3084-31	77272	279	3
114E3084-36	77272	279	6
114E3084-46	77272	279	8
114E3084-47	77272	279	1
114E3084-57	77272	279	5
114E3084-62	77272	279	4
114E3084-68	77272	279	3
114E3084-69	77272	279	1
114E3084-70	77272	279	3
114E3084-70	77272	279	5
114E3084-71	77272	279	1
114E3084-72	77272	275	
114E3085-1	77272	279	
114E3085-1	77272	275	
114E3085-2	77272	279	
114E3085-2	77272	275	
114E3085-3	77272	279	
114E3085-3	77272	275	
114E3085-4	77272	279	
114E3085-4	77272	275	
114E3086-1	77272	275	
114E3086-2	77272	275	
114E3086-3	77272	275	
114E3091-1	77272	275	
114E3093-2	77272	275	
114E3094-1	77272	275	
114E3095-1	77272	275	
114E3096-1	77272	275	
114E3097-1	77272	275	
114E3101-1	77272	275	
114E3101-2	77272	275	
114E3102-1	77272	279	
114E3102-2	77272	279	
114E4001-1	77272	34	1
114E4001-1	77272	250	
114E4001-3	77272	34	24
114E4001-3	77272	250	
114E4001-5	77272	34	
114E4001-5	77272	250	
114E4002-1	77272	34	25
114E4002-1	77272	36	
114E4002-15	77272	34	25
114E4002-15	77272	36	
114E4002-16		36	
114E4002-17		36	
114E4002-18	77272	34	25
114E4002-18	77272	36	
114E4002-19	77272	34	25
114E4002-19	77272	36	
114E4002-7	77272	34	25
114E4002-7	77272	36	
114E4003-4	77272	34	20
114E4003-4	77272	37	
114E4004-1	77272	34	2

REFERENCE NUMBER	MFG CODE	FIG NUMBER	ITEM NUMBER
114E4004-1	77272	37	
114E4004-5	77272	37	47
114E4004-8	77272	34	2
114E4004-8	77272	37	
114E4005-1	77272	29	
114E4005-1	77272	34	3
114E4005-2	77272	29	
114E4005-2	77272	34	3
114E4006-13	77272	38	5
114E4006-14	77272	38	6
114E4006-15	77272	38	7
114E4006-16	77272	38	8
114E4006-17	77272	38	9
114E4006-19	77272	38	10
114E4006-21	77272	38	11
114E4006-3	77272	38	1
114E4006-5	77272	38	2
114E4006-53	77272	38	
114E4006-56	77272	34	4
114E4006-56	77272	38	
114E4006-57	77272	38	4
114E4006-58	77272	38	3
114E4006-63	77272	38	1
114E4007-1	77272	34	5
114E4007-1	77272	40	
114E4007-11	77272	34	5
114E4007-11	77272	40	
114E4007-13	77272	34	57
114E4007-13	77272	40	
114E4007-15	77272	34	60
114E4007-15	77272	40	
114E4007-3	77272	34	57
114E4007-3	77272	40	
114E4007-5	77272	34	60
114E4007-5	77272	40	
114E4010-1	77272	34	4
114E4010-1	77272	39	
114E4010-2	77272	34	57
114E4010-2	77272	41	
114E4010-3	77272	34	
114E4010-3	77272	41	
114E4011-1	77272	34	21
114E4011-1	77272	42	
114E4011-11	81205	42	4
114E4011-13	77272	42	3
114E4011-15	77272	42	6
114E4011-17	77272	42	8
114E4011-19	77272	34	21
114E4011-19	77272	42	
114E4011-21	77272	42	4
114E4011-22	77272	34	21
114E4011-22	77272	42	
114E4012-1	77272	34	59
114E4012-1	77272	42	
114E4012-10	77272	42	12
114E4012-15	77272	42	13
114E4013-1	77272	34	
114E4013-3	77272	34	
114E4014-12	77272	34	
114E4015-1	77272	34	
114E4017-1	77272	34	
114E4017-2	77272	34	
114E4017-3	77272	34	
114E4020-1	77272	36	
114E4020-3	77272	36	
114E4025-1	77272	40	40
114E4025-2	77272	40	41
114E4025-5	77272	40	43
114E4025-7	77272	40	44
114E4026-1	77272	34	
114E4026-1	77272	11A	
114E4026-11	77272	34	
114E4026-15	77272	34	61
114E4026-19	77272	34	64
114E4026-21	77272	34	
114E4026-23	77272	34	
114E4026-25	77272	34	
114E4026-26	77272	34	
114E4026-3	77272	34	
114E4026-5	77272	34	
114E4028-1	77272	34	
114E4028-3	77272	34	15
114E4028-5	77272	34	16
114E4031-1	77272	34	
114E4031-2	77272	34	
114E4032-11	81205	34	
114E4032-13	81205	34	
114E4032-17	81205	34	
114E4032-19	81205	34	
114E4037-4	77272	36	8
114E4038-1	77272	34	
114E4040-1	77272	250	1
114E4040-1	77272	251	
114E4040-2	77272	250	1
114E4040-2	77272	251	
114E4040-3	77272	250	1
114E4040-3	77272	251	
114E4040-4	77272	250	1
114E4040-4	77272	251	
114E4041-1	77272	252	
114E4041-2	77272	251	12
114E4042-1	77272	251	
114E4042-17	77272	251	6
114E4042-19	77272	251	5
114E4042-31	77272	251	6A
114E4044-22	77272	251	24
114E4045-20	77272	251	15
114E4045-21	77272	251	14A
114E4046-15	77272	251	48
114E4046-17	77272	251	48A
114E4046-20	77272	251	46
114E4047-5	77272	253	28
114E4047-7	77272	253	23
114E4048-13	77272	257	11
114E4048-147	77272	251	38
114E4048-17	77272	257	6
114E4048-19	77272	257	4
114E4048-25	77272	251	35A
114E4048-29	77272	257	1
114E4048-33	77272	257	13
114E4048-37	77272	257	15
114E4048-39	77272	251	17
114E4048-41	77272	251	18
114E4048-5	77272	257	22
114E4048-7	77272	257	17
114E4049-1	77272	251	13
114E4050-1	77272	250	6
114E4050-1	77272	257	
114E4050-3	77272	250	8
114E4050-3	77272	257	
114E4050-5	77272	250	9
114E4050-5	77272	257	
114E4050-7	77272	250	9
114E4050-7	77272	257	
114E4051-1	77272	251	
114E4051-3	77272	251	39
114E4052-1	77272	251	
114E4052-16	77272	251	
114E4052-20	77272	251	58A
114E4052-3	77272	251	
114E4052-9	77272	251	
114E4053-1	77272	250	2

REFERENCE NUMBER	MFG CODE	FIG NUMBER	ITEM NUMBER
114E4053-1	77272	253	
114E4053-2	77272	250	2
114E4053-2	77272	253	
114E4053-3	77272	250	2
114E4053-3	77272	253	
114E4053-4	77272	253	30
114E4055-1	77272	253	4D
114E4055-23	77272	253	9
114E4055-27	77272	253	13
114E4055-29	77272	253	11
114E4055-34	77272	253	14
114E4055-42	77272	253	10
114E4055-7	77272	253	5
114E4055-9	77272	253	8
114E4056-1	77272	253	37
114E4056-3	77272	253	18
114E4056-5	77272	253	15
114E4057-1	77272	253	26
114E4057-5	77272	253	31
114E4058-1	77272	253	21
114E4059-20	77272	253	40
114E4059-21	77272	253	46
114E4060-19	77272	253	43B
114E4060-19	77272	255	3B
114E4060-19	77272	256	11
114E4060-29	77272	255	2
114E4060-3	77272	253	42
114E4060-7	77272	256	8
114E4061-1	77272	250	3
114E4061-1	77272	253	
114E4061-2	77272	250	4
114E4061-2	77272	253	
114E4061-3	77272	253	47
114E4061-4	77272	253	48
114E4062-1	77272	251	60
114E4063-1	77272	250	5
114E4063-1	77272	255	
114E4063-3	77272	250	7
114E4063-3	77272	255	
114E4064-1	77272	253	1C
114E4064-3	77272	253	2
114E4065-1	77272	255	6
114E4066-57	77272	255	17
114E4066-58	77272	255	17
114E4066-70	77272	255	12
114E4066-71	77272	255	12
114E4066-74	77272	255	19
114E4066-75	77272	255	19
114E4066-76	77272	255	19
114E4066-77	77272	255	19
114E4067-1	77272	255	11
114E4067-12	77272	255	15
114E4068-1	77272	255	9
114E4070-7	77272	251	55
114E4070-9	77272	251	56
114E4072-1	77272	250	
114E4072-1	77272	256	
114E4072-13	77272	256	3B
114E4072-15	77272	256	18
114E4072-17	77272	256	4
114E4072-19	77272	256	5
114E4072-3	77272	250	
114E4072-3	77272	256	
114E4074-11	77272	256	2
114E4074-13	77272	256	3
114E4074-15	77272	256	17
114E4075-1	77272	251	
114E4075-18	77272	251	
114E4075-21	77272	251	27
114E4075-22	77272	251	29A
114E4075-5	77272	251	29
114E4076-1	77272	251	
114E4076-2	77272	251	
114E4076-3	77272	251	
114E4079-31	77272	36	3
114E4079-33	77272	36	5
114E4079-39	77272	36	18
114E4079-7	77272	36	16
114E4079-78	77272	36	
114E4079-8	77272	36	
114E4080-15	77272	37	3
114E4080-15	77272	37A	
114E4080-5	77272	37	5
114E4080-5	77272	281	18
114E4080-6	77272	37	4
114E4080-6	77272	281	19
114E4080-9	77272	37	2
114E4081-11	77272	40	
114E4081-13	77272	40	
114E4081-15	77272	40	
114E4081-3	77272	40	2
114E4081-5	77272	40	1
114E4082-1	77272	40	5
114E4082-11	77272	40	
114E4082-3	77272	40	5
114E4083-1	77272	40	9
114E4083-11	77272	40	
114E4083-3	77272	40	22
114E4083-5	77272	40	9
114E4083-7	77272	40	22
114E4086-5	77272	40	11
114E4087-1	77272	40	15
114E4087-11	77272	40	
114E4087-15	77272	40	
114E4087-3	77272	40	15
114E4088-10	77272	37	37
114E4090-1	77272	40	16
114E4090-11	77272	40	
114E4090-23	77272	40	
114E4090-3	77272	40	17
114E4090-3	77272	40	3
114E4090-3	77272	40	42
114E4090-5	77272	40	18
114E4090-7	77272	40	16
114E4091-1	77272	40	26
114E4091-11	77272	40	
114E4091-15	77272	40	
114E4091-3	77272	40	26
114E4093-1	77272	40	35
114E4093-11	77272	40	
114E4093-13	77272	40	
114E4093-3	77272	40	35
114E4093-5	77272	40	36
114E4093-7	77272	40	38
114E4095-1	77272	40	
114E4095-3	77272	40	
114E4095-5	77272	40	
114E4096-23	77272	40	
114E4096-25	77272	40	
114E4096-37	77272	40	
114E4096-5	77272	40	
114E4096-7	77272	40	
114E4101-3	77272	36	
114E4102-1	77272	36	
114E4103-23	77272	36	25
114E4103-25	77272	36	
114E4103-3	77272	36	
114E4103-33	77272	36	
114E4103-35	77272	36	
114E4103-35	77272	36	7
114E4103-5	77272	36	
114E4103-7	77272	36	

REFERENCE NUMBER	MFG CODE	FIG NUMBER	ITEM NUMBER
114E4105-1	77272	34	17
114E4105-10	77272	36	29
114E4105-11	77272	36	
114E4105-12	77272	34	17
114E4105-12	77272	36	
114E4105-13	77272	36	
114E4105-8	77272	34	17
114E4105-8	77272	36	
114E4105-9	77272	36	28
114E4108-37	77272	40	19
114E4108-5	77272	40	10
114E4108-5	77272	40	12
114E4108-5	77272	40	23
114E4108-5	77272	40	27
114E4108-5	77272	40	39
114E4108-5	77272	40	6
114E4108-9	77272	40	
114E4109-3	77272	34	
114E4109-7	77272	34	
114E4109-8	77272	34	54
114E4114-1	77272	40	13
114E4114-1	77272	40	20
114E4114-1	77272	40	24
114E4114-1	77272	40	7
114E4114-2	77272	40	14
114E4114-2	77272	40	25
114E4114-2	77272	40	8
114E4114-3	77272	40	37
114E4114-5	77272	40	
114E4114-6	77272	40	
114E4114-8	77272	40	21
114E4115-1	77272	40	4
114E4115-11	77272	40	32
114E4115-13	77272	40	33
114E4115-15	77272	40	34
114E4115-17	77272	40	46
114E4115-19	77272	40	47
114E4115-21	77272	40	
114E4115-21	77272	40	
114E4115-23	77272	40	
114E4115-23	77272	40	
114E4115-23	77272	40	
114E4115-25	77272	40	
114E4115-27	77272	40	45
114E4115-3	77272	40	28
114E4115-5	77272	40	29
114E4115-7	77272	40	30
114E4115-9	77272	40	31
114E4116-21	77272	36	13
114E4116-24	77272	36	
114E4116-25	77272	36	14
114E4116-27	77272	36	15
114E4116-28	77272	36	
114E4116-29	77272	36	
114E4116-30	77272	36	
114E4128-1	77272	39	
114E4128-3	77272	39	12
114E4128-4	77272	39	
114E4128-5	77272	39	12
114E4130-1	77272	41	
114E4130-2	77272	41	
114E4131-1	77272	39	
114E4133-36	77272	41	
114E4133-37	77272	41	
114E4136-1	77272	39	
114E4137-1	77272	41	
114E4139-2	77272	41	
114E4152-1	77272	34	
114E4155-1	77272	41	
114E4167-1	77272	253	30
114E4167-2	77272	253	24
114E4167-23	77272	253	22
114E4167-3	77272	253	29
114E4167-4	77272	253	27
114E4167-4	77272	253	32
114E4167-5	77272	253	25
114E4167-6	77272	253	25
114E4168-2	77272	196	
114E4168-3	77272	196	
114E4181-1	77272	41	48
114E4181-2	77272	41	49
114E4181-3	77272	41	52
114E4181-4	77272	41	54
114E4181-5	77272	41	50
114E5003-1	77272	34	
114E5007-1	77272	34	55
114E5007-3	77272	34	55
114E5007-4	77272	34	55
114E5007-5	77272	34	55
114E5007-5	77272	269	
114E5040-3	77272	F5	3
114E5040-33	77272	F4	5
114E5042-1	77272	F5	4
114E5043-1	77272	A6	6
114E5048-1	77272	270	61F
114E5048-2	77272	270	61G
114E5060-1	77272	F5	7
114E5061-1	77272	F5	5
114E5062-1	77272	269	7
114E5062-1	77272	270	
114E5062-3	77272	269	7
114E5062-3	77272	270	
114E5062-4	77272	269	7
114E5062-4	77272	270	
114E5062-5	77272	269	7
114E5062-5	77272	270	
114E5062-6	77272	269	7
114E5062-6	77272	270	
114E5063-1	77272	269	
114E5063-2	77272	269	19
114E5063-3	77272	269	16
114E5064-1	77272	270	29
114E5064-2	77272	270	47
114E5065-11	77272	269	14
114E5065-12	77272	269	14A
114E5065-16	77272	269	8
114E5065-17	77272	269	11
114E5065-2	77272	269	13
114E5065-3	77272	269	12
114E5065-7	77272	269	9
114E5065-9	77272	269	12
114E5066-1	77272	270	56
114E5067-1	77272	34	
114E5067-2	77272	34	
114E5067-3	77272	34	
114E5067-4	77272	34	
114E5067-5	77272	34	
114E5070-2	77272	270	61A
114E5070-4	77272	270	61
114E5071-6	77272	270	19
114E5072-2	77272	270	21
114E5073-11	77272	269	15B
114E5073-5	77272	270	49
114E5074-1	77272	270	44
114E5075-1	77272	270	48
114E5076-1	77272	270	51
114E5076-2	77272	270	53A
114E5077-1	77272	270	55
114E5078-4	77272	270	31
114E5078-6	77272	270	32C
114E5079-2	77272	270	25
114E5079-5	77272	270	27

REFERENCE NUMBER	MFG CODE	FIG NUMBER	ITEM NUMBER
114E5080-1	77272	270	57
114E5081-1	77272	270	18
114E5081-3	77272	270	18
114E5082-1	77272	270	43
114E5082-2	77272	270	43
114E5083-1	77272	270	40
114E5083-2	77272	270	42A
114E5084-1	77272	270	36B
114E5085-1	77272	270	39B
114E5086-1	77272	270	42
114E5088-12	77272	270	7
114E5089-1	77272	270	16
114E5091-1	77272	270	52
114E5092-1	77272	34	
114E5095-11	77272	269	5
114E5095-12	77272	269	5A
114E5097-2	77272	269	20
114E5097-9	77272	269	23
114E5098-1	77272	269	1
114E5104-1	77272	269	22
114E5105-1	77272	34	
114E5105-17	77272	34	
114E5105-3	77272	34	53
114E5106-1	77272	270	10
114E5110-185	77272	F22	7
114E5110-30	77272	F22	7
114E5114-2	77272	F14	1
114E5114-3	77272	F14	
114E5114-4	77272	F14	
114E5115-11	77272	F14	14
114E5115-11	77272	F17	1
114E5115-2	77272	60	27
114E5115-2	77272	61	29
114E5115-2	77272	F17	36
114E5115-3	77272	F17	32
114E5115-4	77272	F17	15
114E5116-23	77272	F14	18
114E5116-23	77272	F20	1
114E5116-7	77272	F20	31
114E5116-9	77272	F20	19
114E5117-107	77272	F14	3
114E5117-107	77272	F16	1
114E5118-1	77272	F14	2
114E5118-1	77272	F15	1
114E5119-13	77272	F14	7
114E5119-14	77272	F16	26
114E5119-16	77272	F16	28
114E5119-2	77272	F10	2A
114E5119-21	77272	F15	55
114E5119-33	77272	F14	13
114E5119-34	77272	F16	3
114E5119-35	77272	F14	12
114E5119-37	77272	F16	51
114E5119-38	77272	F16	7
114E5119-4	77272	F15	25
114E5119-5	77272	F16	10A
114E5120-1	77272	F15	2
114E5121-1	77272	F17	2
114E5121-3	77272	F17	7
114E5121-5	77272	F17	25
114E5122-1	77272	F17	9
114E5122-3	77272	F17	16
114E5123-1	77272	F17	26
114E5123-11	77272	F17	34
114E5123-13	77272	F17	20
114E5123-15	77272	F17	13
114E5123-17	77272	F17	26A
114E5123-35	77272	F17	27
114E5124-1	77272	F10	2
114E5124-21	77272	F10	2C
114E5124-24	77272	F10	2B
114E5126-1	77272	F15	50
114E5127-1	77272	F14	15
114E5127-3	77272	F14	15A
114E5128-3	77272	F14	
114E5129-1	77272	F20	2
114E5129-19	77272	F20	18
114E5129-3	77272	F20	16
114E5129-31	77272	F20	7
114E5130-35	77272	F21	2
114E5130-49	77272	F21	2
114E5131-1	77272	F15	14
114E5131-2	77272	F15	15
114E5138-9	77272	34	52
114E5139-1	77272	34	
114E5139-2	77272	34	34
114E5139-3	77272	34	
114E5139-6	77272	34	45
114E5139-7	77272	34	46
114E5139-9	77272	34	41
114E5140-1	77272	34	42
114E5140-2	77272	34	
114E5141-1	77272	34	51
114E5142-1	77272	34	31
114E5142-2	77272	34	33
114E5143-1	77272	34	
114E5144-1	77272	34	43
114E5150-1	77272	182	11
114E5150-1	77272	185	
114E5150-10	77272	185	3
114E5150-11	77272	185	6
114E5150-18	77272	185	21
114E5150-19	77272	185	13
114E5150-2	77272	185	
114E5150-20	77272	185	12
114E5150-3	77272	185	18
114E5150-4	77272	185	
114E5150-5	77272	185	17
114E5150-6	77272	185	19
114E5150-7	77272	185	15
114E5150-8	77272	185	11
114E5150-9	77272	185	14
114E5802-1	77272	A9	1
114E5803-1	77272	A9	2
114E5804-1	77272	A9	3
114E5806-1	77272	A9	4
114E5807-1	77272	A9	5
114E5808-1	77272	A9	5
114E5809-1	77272	A10	1
114E5810-1	77272	A10	2
114E5811-1	77272	A10	
114E5811-10	77272	A10	3
114E5812-1	77272	A10	4
114E5813-6	77272	A39	2
114E5814-7	77272	A10	6
114E5815-7	77272	A11	1
114E5816-1	77272	A11	2
114E5817-1	77272	A11	3
114E5818-2	77272	A23	7
114E5821-1	77272	A11	6
114E5821-4	77272	A11	
114E5822-2	77272	A12	1
114E5822-4	77272	A12	
114E5824-4	77272	A12	2
114E5824-5	77272	A12	
114E5824-6	77272	A12	
114E5825-1	77272	A15	7
114E5826-1	77272	A12	4
114E5827-5	77272	A12	5
114E5829-1	77272	A13	1
114E5830-25	77272	A13	2
114E5832-5	77272	A39	4

REFERENCE NUMBER	MFG CODE	FIG NUMBER	ITEM NUMBER
114E5832-6	77272	A39	
114E5832-7	77272	A39	
114E5832-8	77272	A39	
114E5833-1	77272	A13	5
114E5834-1	77272	A13	6
114E5835-1	77272	A14	1
114E5836-1	77272	A14	2
114E5837-1	77272	A14	3
114E5838-1	77272	A14	4
114E5840-1	77272	F10	1
114E5841-1	77272	A15	1
114E5842-1	77272	A15	2
114E5844-5	77272	A15	4
114E5846-1	77272	A15	6
114E5847-6	77272	A16	1
114E5848-12	77272	A30	1
114E5849-10	81205	A16	2
114E5850-20	77272	F11	1
114E5851-1	77272	A47	3
114E5852-16	77272	F11	3
114E5852-9	77272	F11	3
114E5853-11	77272	F11	2
114E5857-14	77272	A17	2
114E5861-1	77272	A17	5
114E5862-1	77272	A17	6
114E5863-4	77272	A18	1
114E5864-1	77272	A18	2
114E5865-1	77272	A18	3
114E5866-1	77272	A18	4
114E5870-9	77272	A18	5
114E5871-1	77272	F23	2
114E5872-1	77272	F10	6
114E5872-35	77272	F10	6
114E5874-1	77272	F21	3
114E5875-3	77272	A30	2
114E5875-4	77272	A30	
114E5876-19	77272	A19	3
114E5876-29	77272	A19	
114E5877-3	77272	A19	4
114E5878-49	77272	F23	3
114E5879-41	77272	F23	4
114E5881-1	77272	F23	7
114E5885-1	77272	A20	5
114E5886-10	77272	A20	6
114E5887-10	77272	A21	1
114E5889-10	77272	A47	
114E5889-2	77272	A47	
114E5889-3	77272	A47	
114E5889-37	77272	A47	
114E5889-38	77272	A47	
114E5889-4	77272	A47	
114E5889-5	77272	A47	
114E5889-6	81205	A47	
114E5889-65	77272	A47	
114E5889-68	77272	A47	7
114E5889-7	81205	A47	
114E5889-8	81205	A47	
114E5890-7	77272	A22	1
114E5891-1	77272	A22	2
114E5892-9	77272	A22	2
114E5895-1	77272	A17	5
114E5896-11	77272	A22	
114E5896-14	77272	A22	5
114E5897-11	77272	A4	10
114E5898-5	77272	A22	6
114E5898-6	77272	A22	
114E5898-7	77272	A22	
114E5898-8	77272	A22	
114E5900-14	77272	F21	1
114E5901-9	77272	A23	3
114E5902-11	77272	F11	6
114E5902-12	77272	F11	
114E5902-13	77272	F11	
114E5902-9	77272	F11	6
114E5903-1	77272	F11	4
114E5904-1	77272	A23	6
114E5906-54	77272	F11	5
114E5908-7	77272	A24	5
114E5909-4	77272	F11	7
114E5909-8	77272	A37	6
114E5910-1	77272	A25	6
114E5911-65	77272	F12	1
114E5911-89	77272	F12	1
114E5913-1	77272	69	
114E5914-1	77272	71	
114E5915-1	77272	81	
114E5916-2	77272	76	
114E5916-3	77272	76	
114E5917-1	77272	83	
114E5919-1	77272	A25	4
114E5920-1	77272	A25	5
114E5922-1	77272	A25	6
114E5923-6	77272	A16	5
114E5924-2	77272	F12	2
114E5925-5	77272	A26	2
114E5928-13	77272	A26	4
114E5932-1	77272	A26	6
114E5933-9	77272	A26	7
114E5934-2	77272	A21	3
114E5934-4	77272	A21	
114E5935-12	77272	A27	2
114E5936-25	77272	A27	10
114E5940-9	77272	A28	1
114E5941-18	77272	A28	2
114E5945-15	77272	A32	1
114E5950-33	77272	F12	3
114E5956-10	77272	A39	5
114E5959-1	77272	A33	4
114E5963-1	77272	F13	3
114E5967-1	77272	A6	7
114E5969-1	77272	A26	3
114E5970-33	77272	A3	6
114E5975-1	77272	A33	3
114E5976-4	77272	A33	5
114E5981-1	77272	A39	3
114E5981-2	77272	A39	
114E5981-6	77272	A39	
114E5985-10	77272	A33	
114E5985-11	77272	A33	
114E5985-4	77272	A33	
114E5985-5	77272	A33	
114E5985-59	77272	A33	6
114E5985-6	77272	A33	
114E5985-7	77272	A33	
114E5985-8	77272	A33	
114E5985-9	77272	A33	
114E5991-1	77272	A29	1
114E5992-94	77272	A2	1
114E5993-10	77272	F25	2
114E5994-1	77272	A11	8
114E5995-1	77272	A35	2
114E5996-27	77272	F21	5
114E5998-17	77272	A35	3
114E6001-1	77272	34	18
114E6001-1	77272	263	
114E6040-1	77272	264	1A
114E6040-1	77272	265	
114E6040-2	77272	264	1A
114E6040-2	77272	268	
114E6041-1	77272	263	
114E6041-1	77272	264	
114E6042-11	77272	263	6

REFERENCE NUMBER	MFG CODE	FIG NUMBER	ITEM NUMBER
114E6042-14	77272	263	
114E6042-3	77272	263	2E
114E6043-1	77272	264	
114E6043-30	77272	264	2
114E6044-1	77272	264	4
114E6045-1	77272	264	
114E6045-11	77272	264	3
114E6047-1	77272	263	
114E6048-1	77272	264	6
114E6049-1	77272	264	9B
114E6050-11	77272	263	26A
114E6050-17	77272	263	18D
114E6050-34	77272	263	26
114E6050-39	77272	263	14A
114E6050-5	77272	263	24C
114E6051-1	77272	263	20
114E6052-1	77272	263	25
114E6052-5	77272	263	25
114E6054-1	77272	263	
114E6055-1	77272	264	
114E6055-3	77272	264	13
114E6057-1	77272	263	
114E6057-62	77272	263	28
114E6058-15	77272	263	7
114E6058-23	77272	263	6A
114E6058-25	77272	263	13
114E6058-26	77272	263	13B
114E6059-1	77272	263	8
114E6059-11	77272	263	
114E6059-3	77272	264	15
114E8001-1	77272	34	
114E8001-4	77272	34	
114E8002-1	77272	34	
114E8002-3	77272	34	
114E8002-5	77272	34	
114E8002-9	77272	34	
114E8101-1	77272	62	
114E8101-1	77272	259	
114E8101-3	77272	259	
114E8131-1	77272	QC1	166
114E8131-1	77272	259	14
114E8131-11	77272	QC1	165
114E8131-11	77272	259	5
114E8131-2	77272	QC1	167
114E8131-2	77272	259	15A
114E8131-3	77272	QC1	170
114E8131-3	77272	259	8
114E8131-7	77272	QC1	163
114E8131-7	77272	259	10A
114E8131-9	77272	QC1	171
114E8131-9	77272	259	7
114E8201-1	77272	258	
114E8231-1	77272	258	9
114E8231-2	77272	258	10
114E8231-3	77272	258	8A
114E8231-4	77272	258	11
114E8231-5	77272	258	7
114E8231-8	77272	258	8A
114E8232-1	77272	258	5
114E8233-1	77272	258	3
114E8233-10	77272	258	3
114E8233-11	77272	258	1
114E8233-2	77272	258	1
114E8233-3	77272	258	2
114GK004-1	77272	F10	
114GK010-3	77272	F11	
114GK012-1	77272	F21	
114GK023-5	77272	A44	
114GK028-1	77272	F10	
114GK065-1	77272	F12	
114GS004-1	77272	A10	5
114GS010-1	77272	A30	3
114GS012-1	77272	F23	1
114GS018-1	77272	A36	7
114GS025-1	77272	A43	3
114GS026-1	77272	A55	3
114GS027-1	77272	A10	5
114GS028-1	77272	F13	6
114GS048-1	77272	A47	8
114GS049-1	77272	A48	3
114GS050-1	77272	A48	5
114GS059-1	77272	A34	1
114GS060-1	77272	A31	2
114GS062-1	77272	A29	7
114GS063-1	77272	A12	3
114GS073-1	77272	A1	2
114GS075-1	77272	A31	7
114GS077-1	77272	A8	3
114GS080-1	77272	A31	9
114GS102-1	77272	A32	2
114GS113-1	77272	A35	1
114GS120-1	77272	A35	4
114GS121-1	77272	A35	6
114GS126-1	77272	A12	7
114GS131-1	77272	A4	4
114GS162-1	77272	A55	2
114GS168-1	77272	A28	5
114GS169-1	77272	A16	8
114GS170-1	77272	A53	6
114GS174-1	77272	A3	9
114GS177-1	77272	A29	9
114GS195-1	77272	A52	1
114GS195-10	77272	A52	6
114GS195-11	77272	A52	7
114GS195-12	77272	A52	10
114GS195-2	77272	A52	2
114GS195-4	77272	A52	3
114GS195-6	77272	A52	8
114GS195-7	77272	A52	9
114GS195-8	77272	A52	4
114GS195-9	77272	A52	5
114GS196-1	77272	A7	1
114GS198-1	77272	A7	1
114GS200-5	77272	A44	5
114GS210-1	77272	A46	9
114GS211-1	77272	A44	1
114GS212-1	77272	A46	7
114GS213-1	77272	A46	8
114GS215-1	77272	A29	6
114GS217-1	77272	A33	7
114GS218-1	77272	A39	6
114GS220-1	77272	A38	6
114GS221-1	77272	A11	5
114GS224-1	77272	A7	1
114GS225-1	77272	A50	10
114GS229-1	77272	A5	10
114GS230-1	77272	A2	9
114GS232-1	77272	A8	10
114GS233-1	77272	A1	4
114GS234-1	77272	A9	9
114GS235-1	77272	A1	5
114GS245-1	77272	A1	6
114G1006-1	77272	A40	2
114G1008-53	77272	A34	2
114G1009-1	77272	A44	4
114G1009-63	77272	A44	4
114G1013-1	77272	F12	4
114G1014-1	77272	A34	5
114G1014-11	77272	A34	5
114G1014-2	77272	A34	
114G1017-1	77272	71	
114G1017-49	77272	71	

REFERENCE NUMBER	MFG CODE	FIG NUMBER	ITEM NUMBER
114G1017-50	77272	71	
114G1018-1	77272	81	
114G1022-1	77272	F3	2
114G1023-16	77272	F4	2
114G1024-1	77272	F3	3
114G1025-1	77272	F4	1
114G1026-30	77272	F13	4
114G1029-1	77272	A24	3
114G1038-31	77272	F10	5
114G1038-71	77272	F10	5
114G1039-10	77272	A36	
114G1039-55	77272	A36	6
114G1039-99	77272	A36	
114G1059-1	77272	A43	4
114G1061-1	77272	A42	1
114G1066-1	77272	A43	6
114G1067-1	77272	A43	6
114G1068-1	77272	A41	6
114G1070-1	77272	A13	3
114G1071-1	77272	A48	4
114G1072-1	77272	A2	7
114G1073-1	77272	A37	5
114G1074-1	77272	A49	1
114G1078-1	77272	A5	3
114G1079-1	77272	A8	4
114G1081-1	77272	A10	7
114G1082-1	77272	A7	8
114G1084-1	77272	A7	2
114G1085-1	77272	A13	3
114G1086-1	77272	A7	2
114G1088-6	77272	A38	5
114G1089-1	77272	A15	3
114G1090-1	77272	A21	4
114G1090-2	77272	A16	3
114G1092-1	77272	F10	3
114G1093-1	77272	A48	8
114G1093-12	77272	A48	8
114G1097-1	77272	A19	1
114G1098-1	77272	A26	5
114G1099-1	77272	A21	4
114G1099-2	77272	A21	
114G1100-1	77272	A5	5
114G1101-2	77272	A35	7
114G1102-1	77272	A11	9
114G1102-11	77272	A11	9
114G1103-1	77272	F12	6
114G1104-1	77272	A40	3
114G1105-1	77272	F13	2
114G1106-1	77272	A37	7
114G1106-2	77272	A37	7
114G1113-1	77272	A1	7
114G1118-1	77272	F25	4
114G1121-1	77272	A4	7
114G1122-1	77272	A41	1
114G1123-1	77272	A20	1
114G1123-5	77272	A20	
114G1124-1	77272	A45	2
114G1125-1	77272	A49	2
114G1126-1	77272	A49	3
114G1128-13	77272	A20	
114G1128-14	77272	A20	4
114G1137-10	77272	A51	5
114G1138-1	77272	A2	1
114G1140-1	77272	A15	7
114G1140-13	77272	A15	
114G1141-1	77272	A15	7
114G1142-1	77272	A15	7
114G1143-1	77272	F22	4
114G1144-1	77272	A49	4
114G1145-1	77272	A50	5
114G1146-1	77272	A49	5
114G1147-1	77272	A20	8
114G1148-1	77272	A20	8
114G1149-1	77272	A21	5
114G1153-1	77272	A5	8
114G1154-1	77272	A27	8
114G1155-1	77272	A46	5
114G1156-1	77272	A5	9
114G1157-1	77272	A5	8
114G1160-16	77272	A32	7
114G1161-1	77272	A7	5
114G1163-1	77272	A55	1
114G1165-1	77272	A49	7
114G1166-1	77272	A31	5
114G1167-1	77272	A31	5
114G1170-1	77272	A2	2
114G1171-1	77272	F24	7
114G1172-1	77272	F24	5
114G1173-1	77272	F24	6
114G1174-1	77272	A44	8
114G1175-1	77272	A2	3
114G1176-1	77272	A2	4
114G1177-1	77272	A2	3
114G1178-1	77272	A2	6
114G1179-1	77272	A2	3
114G1180-1	77272	A24	4
114G1180-3	77272	A24	
114G1183-1	77272	69	
114G1183-1	77272	70	
114G1184-1	77272	75	
114G1185-1	77272	A3	3
114G1186-1	77272	A24	1
114G1187-1	77272	A41	5
114G1188-1	77272	A8	6
114G1189-1	77272	A42	5
114G1193-1	77272	A8	9
114G1194-1	77272	A9	6
114G1195-11	77272	75	
114G1196-1	77272	F21	4
114G1197-1	77272	A25	7
114G1200-1	77272	A9	8
114G1201-1	77272	A11	4
114G1202-1	77272	A54	3
114G1203-1	77272	A54	3
114G1205-2	77272	A33	1
114G1205-22	77272	A33	1
114G1206-1	77272	F5	8
114G1207-1	77272	A42	6
114G1208-1	77272	F22	5
114G1218-1	77272	F23	6
114G1219-1	77272	A43	1
114G1220-1	77272	A43	2
114G1221-1	77272	A43	2
114G1225-1	77272	A43	4
114G1227-1	77272	A43	5
114G1228-1	77272	A43	6
114G1230-1	77272	A45	3
114G1233-1	77272	A7	4
114G1235-1	77272	A5	7
114G1236-1	77272	A27	4
114G1238-21	77272	F3	2
114G1242-1	77272	A17	4
114G1244-2	77272	F3	5
114G1244-3	77272	F3	5
114G1245-1	77272	A8	5
114G1246-2	77272	A4	2
114G1247-1	77272	A8	8
114G1262-1	77272	A4	3
114G1263-1	77272	A45	4
114G1264-1	77272	F25	1
114G1269-1	77272	A4	5
114G1271-1	77272	A45	5

REFERENCE NUMBER	MFG CODE	FIG NUMBER	ITEM NUMBER
114G1273-1	77272	A45	6
114G1274-1	77272	A50	1
114G1275-1	77272	A50	3
114G1276-1	77272	A4	6
114G1288-1	77272	A50	4
114G1290-1	77272	A5	1
114G1291-1	77272	A5	2
114G1292-1	77272	A5	4
114G1298-1	77272	A5	6
114G1299-1	77272	A6	1
114G1300-1	77272	A6	3
114G1301-1	77272	A15	7
114G1302-1	77272	A49	6
114G1303-1	77272	A6	4
114G1304-1	77272	A9	10
114G1305-1	77272	A44	6
114G1306-1	77272	A50	6
114G1307-1	77272	A7	6
114G1308-1	77272	A51	1
114G1309-1	77272	A7	7
114G1310-1	77272	F25	5
114G1311-1	77272	A51	2
114G1312-1	77272	A23	1
114G1313-1	77272	A9	7
114G1314-1	77272	A17	1
114G1317-1	77272	A51	3
114G1318-1	77272	A21	4
114G1319-1	77272	A27	3
114G1320-1	77272	A27	6
114G1323-1	77272	F4	4
114G1331-1	77272	A23	4
114G1347-1	77272	F11	9
114G1348-1	77272	F22	1
114G1354-1	77272	F23	5
114G1369-1	77272	A14	5
114G1373-1	77272	A28	7
114G1377-1	77272	F22	3
114G1390-1	77272	F22	6
114G1391-1	77272	A44	7
114G1393-1	77272	A38	2
114G1394-1	77272	A8	7
114G1408-1	77272	A30	5
114G1409-1	77272	F22	2
114G1410-1	77272	A46	4
114G1411-1	77272	A46	6
114G5009-1	77272	A17	
114G5061-1	77272	F22	
114G5066-1	77272	F22	
114HK185-5	77272	62	
114HK481-2	77272	103	27A
114HS101-3	77272	117	70
114HS101-3	77272	129	151
114HS102-1	77272	112	34
114HS102-2	77272	109	76
114HS102-2	77272	119	20
114HS102-4	77272	109	77
114HS103-1	77272	119	270
114HS103-1	77272	127	
114HS103-2	77272	119	270
114HS103-2	77272	146	
114HS104-1	77272	129	51
114HS104-2	77272	129	51
114HS104-2	77272	137	
114HS104-3	77272	129	51
114HS104-3	77272	137	
114HS105-6	77272	110	15
114HS105-6	77272	223	45
114HS105-6	77272	224	1
114HS106-10		129	22
114HS106-10		135	
114HS106-11	77272	135	
114HS106-12	77272	135	20
114HS106-13		129	22
114HS106-13		135	
114HS106-5	77272	135	
114HS106-6		129	22
114HS106-6		135	
114HS106-7	77272	135	
114HS106-8		129	22
114HS106-8		135	
114HS106-9	77272	135	20
114HS107-1	77272	119	31
114HS108-2	77272	100	19
114HS111-1	77272	119	123
114HS111-1	77272	125	
114HS112-3	77272	117	71
114HS112-3	77272	129	148
114HS113-1	77272	112	39
114HS114-2	77272	112	75
114HS114-2	77272	116	16
114HS114-2	77272	119	149
114HS114-2	77272	119	46
114HS114-2	77272	129	25
114HS114-2	77272	129	80A
114HS114-2	77272	152	
114HS114-3	77272	112	75
114HS114-3	77272	116	16
114HS114-3	77272	119	149
114HS114-3	77272	119	46
114HS114-3	77272	129	25
114HS114-3	77272	129	80A
114HS114-3	77272	152	
114HS115-1	77272	119	317
114HS116-2	77272	129	11
114HS116-2	77272	136	
114HS117-1	77272	119	156
114HS117-1	77272	120	1
114HS118-2	77272	110	48
114HS118-2	77272	111	
114HS120-10	77272	109	13
114HS120-10	77272	109	54
114HS120-10	77272	119	328
114HS120-10	77272	128	
114HS120-11	77272	109	58
114HS120-11	77272	109	61
114HS120-11	77272	119	226
114HS120-11	77272	142	
114HS120-12	77272	109	13
114HS120-12	77272	109	54
114HS120-12	77272	119	328
114HS120-12	77272	142	
114HS120-13	77272	109	58
114HS120-13	77272	109	61
114HS120-13	77272	119	226
114HS120-13	77272	128	
114HS120-13	81996	109	58
114HS120-13	81996	109	61
114HS120-13	81996	119	226
114HS120-14	77272	109	13
114HS120-14	77272	109	54
114HS120-14	77272	119	328
114HS120-14	77272	128	
114HS120-14	81996	109	13
114HS120-14	81996	109	54
114HS120-14	81996	119	328
114HS120-15	77272	109	58
114HS120-15	77272	109	61
114HS120-15	77272	119	226
114HS120-15	77272	126	
114HS120-16	77272	109	13
114HS120-16	77272	109	54
114HS120-16	77272	119	328

REFERENCE NUMBER	MFG CODE	FIG NUMBER	ITEM NUMBER
114HS120-16	77272	126	
114HS120-7	77272	109	58
114HS120-7	77272	109	61
114HS120-7	77272	119	226
114HS120-7	77272	128	
114HS120-8	77272	109	13
114HS120-8	77272	109	54
114HS120-8	77272	119	328
114HS120-8	77272	128	
114HS120-9	77272	109	58
114HS120-9	77272	109	61
114HS120-9	77272	119	226
114HS120-9	77272	128	
114HS121-1	77272	119	354
114HS121-1	77272	151	
114HS122-1	77272	119	92
114HS122-1	77272	121	
114HS123-4	77272	129	44
114HS123-5	77272	QC1	134
114HS123-5	77272	QC1	98
114HS123-5	77272	143	14
114HS124-1	77272	119	294
114HS124-1	77272	122	
114HS126-1	77272	119	82
114HS126-1	77272	124	
114HS126-2	77272	119	82
114HS126-2	77272	124	
114HS127-1	77272	83	14
114HS127-1	77272	134	
114HS127-3	77272	83	14
114HS127-3	77272	134	
114HS128-2	77272	273	13
114HS128-2	77272	274	
114HS128-3	77272	273	13
114HS128-3	77272	274	
114HS129-2	77272	83	28
114HS129-2	77272	138	
114HS129-3	77272	83	28
114HS129-3	77272	138	
114HS130-9	77272	83	5
114HS130-9	77272	149	
114HS131-1	77272	129	62
114HS131-1	77272	132	
114HS132-3	77272	129	12
114HS132-3	77272	130	
114HS133-1	77272	117	82
114HS133-1	77272	129	94
114HS133-2	77272	119	393
114HS133-4	77272	117	82
114HS133-4	77272	129	94
114HS133-4	77272	155	
114HS133-5	77272	119	393
114HS135-1	77272	139	40
114HS135-1	77272	139	88
114HS135-1	77272	141	
114HS135-2	77272	129	29
114HS135-2	77272	140	
114HS136	77272	139	112
114HS136-1	77272	139	112
114HS136-1	77272	150	
114HS136-2	77272	139	112
114HS136-2	77272	150A	
114HS137-1	77272	119	378
114HS141-1	77272	117	66
114HS141-1	77272	129	78
114HS141-1	77272	129	9A
114HS141-1	77272	129	90B
114HS146-67	77272	BULK	
114HS146-68	77272	143	21
114HS146-70	77272	QC1	85
114HS146-74	77272	143	21
114HS200	77272	62	71
114HS200	77272	QC1	77
114HS200-1	77272	62	71
114HS200-1	77272	65	
114HS200-1	77272	QC1	77
114HS200-2	77272	62	71
114HS200-2	77272	67	
114HS200-2	77272	QC1	77
114HS226-1	77272	119	82
114HS226-1	77272	156	
114HS432-1	77272	228	21
114HS440-1	77272	228	
114HS441-1	77272	147	2
114HS441-2	77272	147	3
114HS441-6	77272	228	
114HS450-1	77272	73	64
114HS510-1	77272	270	22
114HS510-1	77272	272	
114HS510-4	77272	270	22
114HS510-4	77272	272	
114HS580-1	77272	105	
114HS580-1	77272	228	142
114HS660-1	77272	102	45
114HS660-1	77272	103	38
114HS661-1	77272	244	31
114HS661-2	77272	222	155
114HS661-2	77272	222	42
114HS661-2	77272	244	32
114HS662-1	77272	102	29B
114HS662-1	77272	102	31
114HS662-1	77272	103	27
114HS662-1	77272	103	27A
114HS662-1	77272	222	
114HS662-1	77272	244	
114HS662-1	77272	248	44
114HS662-2	77272	103	27
114HS662-2	77272	103	27A
114HS663-3	77272	244	31
114HS663-4	77272	222	155
114HS663-4	77272	222	42
114HS663-4	77272	244	32
114HS664-1	77272	102	7C
114HS664-1	77272	103	6A
114HS664-1	77272	222	140
114HS664-1	77272	222	148
114HS664-1	77272	244	15
114HS664-1	77272	244	24
114HS680-1	77272	74	29
114HS681-1	77272	72	84
114HS681-1	77272	74	77
114HS682-1	77272	72	83
114HS682-1	77272	74	29
114HS701-1	77272	228	146
114H1012-1	77272	112	
114H1013-1	77272	109	
114H1014-1	77272	110	
114H1015-1	77272	112	
114H1016-1	77272	109	
114H1017-1	77272	110	
114H1019-1	77272	223	46
114H1021-1	77272	100	
114H1021-2	77272	100	
114H1021-3	77272	100	2
114H1021-4	77272	100	
114H1021-6	77272	100	
114H1024-1	77272	100	23
114H1100-1	77272	109	67
114H1100-101	77272	109	87
114H1100-103	77272	109	49
114H1100-105	77272	109	72
114H1100-107		109	

REFERENCE NUMBER	MFG CODE	FIG NUMBER	ITEM NUMBER
114H1100-109	77272	109	89
114H1100-111	77272	109	6
114H1100-113	77272	109	
114H1100-115	77272	109	
114H1100-117	77272	109	45
114H1100-119	77272	109	7
114H1100-121	77272	109	44
114H1100-123	77272	109	6
114H1100-17	77272	109	52
114H1100-21	77272	109	28
114H1100-23	77272	109	24
114H1100-25	77272	109	82
114H1100-27	77272	109	78
114H1100-29	77272	109	84
114H1100-3	77272	109	56
114H1100-31	77272	109	26
114H1100-33	77272	109	21
114H1100-35	77272	109	81
114H1100-37	77272	109	79
114H1100-39	77272	109	83
114H1100-45	77272	109	85
114H1100-49	77272	109	62
114H1100-5	77272	109	68
114H1100-51	77272	109	59
114H1100-59	77272	109	12
114H1100-63	77272	109	66
114H1100-65	77272	109	65
114H1100-67	77272	109	45
114H1100-7	77272	109	15
114H1100-71	77272	109	7
114H1100-75	77272	109	31
114H1100-77	77272	109	34
114H1100-79	77272	109	9
114H1100-81	77272	109	37
114H1100-83	77272	109	11
114H1100-85	77272	109	75
114H1100-89	77272	109	44
114H1100-9	77272	109	69
114H1100-91	77272	109	67
114H1100-93	77272	109	68
114H1100-95	77272	109	69
114H1100-99	77272	109	63
114H1101-1	77272	110	83
114H1101-101	77272	110	50
114H1101-103	77272	110	49
114H1101-105	77272	110	43
114H1101-107	77272	110	44
114H1101-109	77272	110	46
114H1101-11	77272	110	60
114H1101-111	77272	110	45
114H1101-113	77272	110	41
114H1101-115	77272	110	40
114H1101-117	77272	110	50
114H1101-119	77272	110	49
114H1101-121	77272	110	43
114H1101-123	77272	110	44
114H1101-125	77272	110	92
114H1101-127	77272	110	93
114H1101-13	77272	110	62
114H1101-15	77272	110	26
114H1101-17	77272	110	27
114H1101-19	77272	110	28
114H1101-21	77272	110	29
114H1101-23	77272	110	24
114H1101-25	77272	110	23
114H1101-27	77272	110	22
114H1101-29	77272	110	21
114H1101-3	77272	110	59
114H1101-31	77272	110	16
114H1101-33	77272	110	17
114H1101-35	77272	110	18
114H1101-37	77272	110	19
114H1101-43	77272	110	46
114H1101-45	77272	110	45
114H1101-47	77272	110	41
114H1101-49	77272	110	40
114H1101-5	77272	110	31
114H1101-51	77272	110	36
114H1101-53	77272	110	37
114H1101-57	77272	110	50
114H1101-59	77272	110	65
114H1101-61	77272	110	81
114H1101-63	77272	110	32
114H1101-65	77272	110	53
114H1101-67	77272	110	52
114H1101-69	77272	110	55
114H1101-7	77272	110	61
114H1101-71	77272	110	56
114H1101-73	77272	110	43
114H1101-75	77272	110	44
114H1101-77	77272	110	49
114H1101-79	77272	110	79
114H1101-81	77272	110	73
114H1101-83	77272	110	70
114H1101-85	77272	110	92
114H1101-87	77272	110	86
114H1101-89	77272	110	93
114H1101-91	77272	110	88
114H1101-93	77272	110	46
114H1101-95	77272	110	45
114H1101-97	77272	110	41
114H1101-99	77272	110	40
114H1102-101	77272	112	65
114H1102-103	77272	112	68
114H1102-105	77272	112	102
114H1102-107	77272	112	107
114H1102-109	77272	112	70
114H1102-111	77272	112	118
114H1102-113	77272	112	119
114H1102-115	77272	112	121
114H1102-117	77272	112	104
114H1102-119	77272	112	114
114H1102-121	77272	112	112
114H1102-123	77272	112	101
114H1102-125	77272	112	120
114H1102-139	77272	112	166
114H1102-143	77272	112	170
114H1102-155	77272	112	40
114H1102-157	77272	112	25
114H1102-161	77272	112	36
114H1102-163	77272	112	46
114H1102-177	77272	112	115
114H1102-181	77272	112	93
114H1102-185	77272	112	60
114H1102-187	77272	112	51
114H1102-189	77272	112	54
114H1102-191	77272	112	55
114H1102-193	77272	112	56
114H1102-195	77272	109	89
114H1102-197	77272	112	51
114H1102-199	77272	112	98
114H1102-201	77272	112	89
114H1102-203	77272	112	162
114H1102-205	77272	112	128
114H1102-205	77272	112	132
114H1102-205	77272	112	158
114H1102-207	77272	112	144
114H1102-209	77272	112	140
114H1102-213	77272	112	156
114H1102-215	77272	112	148
114H1102-215	77272	112	94
114H1102-217	77272	112	126

REFERENCE NUMBER	MFG CODE	FIG NUMBER	ITEM NUMBER
114H1102-219	77272	112	99
114H1102-221	77272	112	136
114H1102-221	77272	112	96
114H1102-223	77272	112	49
114H1102-225	77272	112	51
114H1102-227	77272	112	31
114H1102-229	77272	112	43
114H1102-231	77272	112	21
114H1102-233	77272	112	23
114H1102-235	77272	112	13
114H1102-237	77272	112	16
114H1102-63	77272	112	54
114H1102-65	77272	112	55
114H1102-67	77272	112	56
114H1102-69	77272	112	58
114H1102-71	77272	112	59
114H1150-3	77272	109	39
114H1150-37	77272	112	8
114H1150-39	77272	112	3
114H2001-1	77272	116	
114H2001-2	77272	116	
114H2001-3	77272	116	
114H2002-1	77272	115	
114H2003-1	77272	116	
114H2100-1	77272	116	2
114H2100-11	77272	116	20
114H2100-13	77272	116	4
114H2100-15	77272	116	21
114H2100-17	77272	116	5
114H2100-21	77272	116	6
114H2100-23	77272	116	23
114H2100-25	77272	116	7
114H2100-27	77272	116	19
114H2100-29	77272	116	13
114H2100-3	77272	116	14
114H2100-39	77272	116	33
114H2100-47	77272	116	40
114H2100-49	77272	116	35
114H2100-5	77272	116	18
114H2100-53	77272	116	33
114H2100-55	77272	116	22
114H2100-57	77272	116	3
114H2100-59	77272	116	34
114H2100-61	77272	116	29
114H2100-63	77272	116	31
114H2100-65	77272	116	32
114H2100-67	77272	116	41
114H2100-69	77272	116	24
114H2100-7	77272	116	15
114H2100-71	77272	116	26
114H2100-73	77272	116	43
114H2100-75	77272	116	27
114H2100-77	77272	116	28
114H2100-79	77272	116	45
114H2100-81	77272	116	42
114H2100-83	77272	116	44
114H2100-85	77272	116	38
114H2100-87	77272	116	39
114H2101-1	77272	115	2
114H2101-15	77272	115	38
114H2101-17	77272	115	54
114H2101-19	77272	115	56
114H2101-21	77272	115	58
114H2101-25	77272	115	47
114H2101-27	77272	115	
114H2101-29	77272	115	40
114H2101-3	77272	115	4
114H2101-33	77272	115	33
114H2101-35	77272	115	31
114H2101-37	77272	115	9
114H2101-41	77272	115	7
114H2101-43	77272	115	18
114H2101-45	77272	115	37
114H2101-47	77272	115	51
114H2101-49	77272	115	52
114H2101-5	77272	115	
114H2101-53	77272	115	16
114H2101-55	77272	115	33
114H2101-57	77272	115	20
114H2101-59	77272	115	35
114H2101-61	77272	115	14
114H2101-63	77272	115	12
114H2101-65	77272	115	6
114H2101-67	77272	115	58
114H2101-69	77272	115	56
114H2101-7	77272	115	6
114H2101-71	77272	115	40
114H2101-73	77272	115	30
114H2101-75	77272	115	28
114H2101-77	77272	115	27
114H2101-79	77272	115	25
114H2101-81	77272	115	23
114H2101-83	77272	115	21
114H2200-12	77272	116	37
114H2200-13	77272	116	37
114H2200-17	77272	116	36
114H2200-22	77272	257	15C
114H2200-23	77272	116	40B
114H2200-24	77272	116	40A
114H2200-25	77272	116	1A
114H2200-30	77272	116	37
114H2200-31	77272	257	15D
114H2200-32	77272	116	40C
114H3017-1	77272	117	10A
114H3017-1	77272	119	
114H3017-3	77272	117	10A
114H3017-3	77272	119	
114H3019-1	77272	139	
114H3019-2	77272	139	
114H3019-3	77272	139	
114H3019-4	77272	139	
114H3021-1	77272	139	
114H3021-2	77272	139	
114H3022-3	77272	119	
114H3022-5	77272	119	
114H3023-3	77272	129	
114H3023-4	77272	129	
114H3023-5	77272	129	
114H3025-1	77272	117	
114H3025-2	77272	117	
114H3025-3	77272	117	
114H3026-3	77272	62	68
114H3026-3	77272	143	
114H3027-1	77272	62	
114H3027-1	77272	QC1	125
114H3027-2	77272	62	
114H3028-1	77272	129	22
114H3028-1	77272	135	
114H3029-15	77272	129	23C
114H3029-3	77272	129	22C
114H3029-4	77272	129	23G
114H3030-2	77272	119	
114H3031-1	77272	119	52
114H3033-1	77272	119	165
114H3034-1	77272	119	168
114H3035-1	77272	119	166
114H3036-1	77272	118	
114H3036-2	77272	118	
114H3036-3	77272	118	
114H3036-4	77272	118	
114H3036-5	77272	118	
114H3037-1	77272	118	

REFERENCE NUMBER	MFG CODE	FIG NUMBER	ITEM NUMBER
114H3037-2	77272	11B	
114H3037-3	77272	11B	
114H3037-4	77272	11B	
114H3038-2	77272	21	
114H3039-1	77272	11B	
114H3040-1	77272	108	
114H3040-1	77272	119	360
114H3040-2	77272	108	1
114H3040-4	77272	108	
114H3040-4	77272	119	360
114H3041-1	77272	108	7
114H3042-1	77272	108	
114H3043-1	77272	108	
114H3044-1	77272	108	
114H3045-1	77272	108	
114H3046-1	77272	139	
114H3047-1	77272	119	
114H3047-2	77272	119	
114H3048-1	77272	129	
114H3048-2	77272	129	
114H3051-1	77272	129	15
114H3053-1	77272	117	
114H3053-2	77272	117	
114H3053-3	77272	117	
114H3054-1	77272	62	
114H3100-101	77272	139	19
114H3100-101	77272	139	69
114H3100-11	77272	139	41
114H3100-11	77272	139	89
114H3100-13	77272	139	94
114H3100-15	77272	139	26
114H3100-3	77272	139	77
114H3100-39	77272	139	66
114H3100-43	77272	139	58
114H3100-45	77272	139	19
114H3100-47	77272	139	20
114H3100-49	77272	139	68
114H3100-51	77272	139	69
114H3100-53	77272	139	62
114H3100-55	77272	139	64
114H3100-57	77272	139	9
114H3100-59	77272	139	5
114H3100-61	77272	139	11
114H3100-63	77272	139	7
114H3100-69	77272	139	14
114H3100-7	77272	139	73
114H3100-71	77272	139	46
114H3100-73	77272	139	29
114H3100-75	77272	139	50
114H3100-85	77272	139	48
114H3100-87	77272	139	44
114H3100-89	77272	139	32
114H3100-91	77272	139	34
114H3100-93	77272	139	82
114H3100-95	77272	139	17
114H3100-97	77272	139	109
114H3100-99	77272	139	68
114H3101-1	77272	119	51
114H3101-15	77272	119	50
114H3101-17	77272	119	11
114H3101-3	77272	119	38
114H3101-5	77272	119	35
114H3101-7	77272	119	24
114H3102-101	77272	119	2
114H3102-11	77272	119	61
114H3102-111	77272	119	170
114H3102-113	77272	119	333
114H3102-117	77272	119	210
114H3102-119	77272	119	211
114H3102-121	77272	119	209
114H3102-123	77272	119	213
114H3102-125	77272	119	215
114H3102-127	77272	119	216
114H3102-129	77272	119	
114H3102-13	77272	119	64
114H3102-131	77272	119	70
114H3102-133	77272	119	72
114H3102-139	77272	119	79
114H3102-149	77272	119	78
114H3102-15	77272	119	
114H3102-151	77272	119	77
114H3102-153	77272	119	182
114H3102-155	77272	119	73
114H3102-157	77272	119	69
114H3102-161	77272	119	350
114H3102-167	77272	119	312
114H3102-169	77272	119	63
114H3102-171	77272	119	348
114H3102-177	77272	119	265
114H3102-181	77272	119	263
114H3102-183	77272	119	343
114H3102-19	77272	119	155
114H3102-191	77272	119	275
114H3102-195	77272	119	273
114H3102-197	77272	119	308
114H3102-201	77272	119	91
114H3102-203	77272	119	119
114H3102-205	77272	119	116
114H3102-207	77272	119	75
114H3102-209	77272	119	74
114H3102-21	77272	119	154
114H3102-211	77272	119	263
114H3102-213	77272	119	134
114H3102-223	77272	119	265
114H3102-255	77272	119	5
114H3102-257	77272	119	83
114H3102-267	77272	119	288
114H3102-269	77272	119	154
114H3102-273	77272	119	292
114H3102-281	77272	119	348
114H3102-283	77272	119	106
114H3102-285	77272	119	104
114H3102-287	77272	119	113
114H3102-289	77272	119	114
114H3102-291	77272	119	107
114H3102-293	77272	119	110
114H3102-295	77272	119	111
114H3102-297	77272	119	334
114H3102-299	77272	119	333
114H3102-301	77272	119	331
114H3102-303	77272	119	312
114H3102-307	77272	119	103
114H3102-313	77272	119	385
114H3102-315	77272	119	367
114H3102-317	77272	119	370
114H3102-319	77272	119	291
114H3102-321	77272	119	372
114H3102-323	77272	119	115
114H3102-325	77272	119	118
114H3102-329	77272	119	90
114H3102-33	77272	119	358
114H3102-331	77272	119	70
114H3102-333	77272	119	72
114H3102-335	77272	119	183
114H3102-337	77272	119	190
114H3102-339	77272	119	152
114H3102-341	77272	119	153
114H3102-343	77272	119	150
114H3102-345	77272	119	147
114H3102-347	77272	119	144
114H3102-35	77272	119	334
114H3102-351	77272	119	169

REFERENCE NUMBER	MFG CODE	FIG NUMBER	ITEM NUMBER
114H3102-353	77272	119	181
114H3102-355	77272	119	155
114H3102-357	77272	119	387
114H3102-359	77272	119	390
114H3102-361	77272	119	202
114H3102-363	77272	119	191
114H3102-365	77272	119	198
114H3102-367	77272	119	192
114H3102-369	77272	119	204
114H3102-371	77272	119	203
114H3102-373	77272	119	351
114H3102-375	77272	119	384
114H3102-377	77272	119	142
114H3102-379	77272	119	218
114H3102-379	77272	119	86
114H3102-381	77272	119	221
114H3102-383	77272	119	236
114H3102-385	77272	119	255
114H3102-389	77272	119	259
114H3102-391	77272	119	261
114H3102-393	77272	119	310
114H3102-395	77272	119	90
114H3102-399	77272	119	257
114H3102-401	77272	119	249
114H3102-403	77272	119	241
114H3102-405	77272	119	236
114H3102-407	77272	119	263
114H3102-409	77272	119	255
114H3102-411	77272	119	252
114H3102-413	77272	119	244
114H3102-415	77272	119	246
114H3102-417	77272	119	75
114H3102-419	77272	119	74
114H3102-421	77272	119	83
114H3102-423	77272	119	87
114H3102-43	77272	119	331
114H3102-45	77272	119	323
114H3102-47	77272	119	322
114H3102-51	77272	119	60
114H3102-53	77272	119	57
114H3102-57	77272	119	53
114H3102-73	77272	119	134
114H3102-75	77272	119	3
114H3102-77	77272	119	135
114H3102-79	77272	119	4
114H3102-81	77272	119	56
114H3102-83	77272	119	138
114H3102-85	77272	119	67
114H3102-87	77272	119	101
114H3102-89	77272	119	176
114H3102-91	77272	119	177
114H3102-95	77272	119	54
114H3102-97	77272	119	1
114H3102-99	77272	119	171
114H3103-1	77272	129	99
114H3103-115	77272	129	134
114H3103-117	77272	129	136
114H3103-13	77272	129	90
114H3103-133	77272	129	
114H3103-135	77272	129	
114H3103-137	77272	129	6
114H3103-151	77272	129	46
114H3103-153	77272	129	
114H3103-155	77272	129	45
114H3103-161	77272	129	
114H3103-171	77272	129	16
114H3103-181	77272	129	50
114H3103-183	77272	129	101
114H3103-185	77272	129	103
114H3103-197	77272	129	108
114H3103-199	77272	129	78
114H3103-207	77272	129	
114H3103-209	77272	129	
114H3103-213	77272	129	116
114H3103-215	77272	129	128
114H3103-227	77272	129	42
114H3103-229	77272	129	40
114H3103-235	77272	129	33
114H3103-237	77272	129	31
114H3103-243	77272	129	
114H3103-245	77272	129	
114H3103-247	77272	129	47
114H3103-249	77272	129	46B
114H3103-269	77272	129	34
114H3103-271	77272	129	57
114H3103-275	77272	129	103
114H3103-277	77272	129	46
114H3103-279	77272	129	43
114H3103-281	77272	129	46B
114H3103-289	77272	129	74
114H3103-295	77272	129	52
114H3103-299	77272	129	95A
114H3103-301		129	95C
114H3103-303	77272	129	95H
114H3103-305	77272	129	35
114H3103-309	77272	129	69
114H3103-311	77272	129	70
114H3103-315	77272	117	57
114H3103-317	77272	117	59
114H3103-325	77272	129	36
114H3103-329	77272	117	60
114H3103-329	77272	119	235
114H3103-333	77272	119	389
114H3103-337	77272	129	4
114H3103-341	77272	129	21
114H3103-343	77272	129	21C
114H3103-345	77272	129	21B
114H3103-35	77272	129	100
114H3103-355	77272	129	86
114H3103-357	77272	129	86A
114H3103-363	77272	129	107
114H3103-365	77272	129	88
114H3103-367	77272	129	89
114H3103-371	77272	129	79B
114H3103-373	77272	129	71
114H3103-375	77272	129	95
114H3103-377	77272	129	102
114H3103-379	77272	129	3
114H3103-381	77272	129	72
114H3103-383	77272	119	231
114H3103-385	77272	119	225
114H3103-387	77272	119	230
114H3103-389	77272	119	369
114H3103-389	77272	129	95E
114H3103-391	77272	129	38
114H3103-393	77272	129	30A
114H3103-395	77272	129	28
114H3103-397	77272	129	8
114H3103-399	77272	129	10
114H3103-401	77272	129	7
114H3103-403	77272	129	7D
114H3103-405	77272	129	90
114H3103-407	77272	129	90C
114H3103-409	77272	129	105
114H3103-411	77272	129	87
114H3103-413	77272	129	96
114H3103-415	77272	129	27
114H3103-417	77272	117	58
114H3103-419	77272	129	19
114H3103-423	77272	129	126
114H3103-425	77272	129	127
114H3103-427	77272	129	46

REFERENCE NUMBER	MFG CODE	FIG NUMBER	ITEM NUMBER
114H3103-429	77272	129	41
114H3103-431	77272	129	41B
114H3103-433	77272	129	40B
114H3103-435	77272	129	40
114H3103-439	77272	129	53A
114H3103-441	77272	129	
114H3103-445	77272	139	117
114H3103-447	77272	139	106
114H3103-449	77272	139	103
114H3103-451	77272	129	95C
114H3103-455	77272	129	113
114H3103-71	77272	129	91
114H3103-75	77272	129	
114H3103-87	77272	129	125
114H3103-93		129	113
114H3103-95	77272	129	123
114H3103-99	77272	129	111
114H3104-103	77272	117	20
114H3104-105	77272	117	17
114H3104-107	77272	117	
114H3104-109	77272	117	
114H3104-11	77272	117	53
114H3104-111	77272	117	30
114H3104-113	77272	117	33
114H3104-115	77272	117	31
114H3104-117	77272	117	34
114H3104-135	77272	117	96
114H3104-137	77272	117	97
114H3104-151	77272	117	106
114H3104-153	77272	117	108
114H3104-155	77272	117	99
114H3104-157	77272	117	101
114H3104-159	77272	117	103
114H3104-161	77272	117	104
114H3104-167	77272	117	37
114H3104-169	77272	117	39
114H3104-173	77272	117	74
114H3104-177	77272	117	93
114H3104-181	77272	117	64
114H3104-183	77272	117	63
114H3104-185	77272	117	68
114H3104-187	77272	117	85
114H3104-189	77272	117	92
114H3104-191	77272	117	90
114H3104-203	77272	117	16
114H3104-207	77272	117	21
114H3104-209	77272	117	15
114H3104-211	77272	117	9
114H3104-213	77272	117	18
114H3104-215	77272	117	3
114H3104-217	77272	117	10
114H3104-219	77272	117	4
114H3104-221	77272	117	8
114H3104-223	77272	117	29
114H3104-225	77272	117	29A
114H3104-227	77272	117	64
114H3104-229	77272	117	67
114H3104-23	77272	117	54
114H3104-231	77272	117	78
114H3104-233	77272	117	58B
114H3104-235	77272	117	58D
114H3104-237	77272	117	38
114H3104-239	77272	117	41
114H3104-241	77272	117	42
114H3104-243	77272	117	43
114H3104-245	77272	117	58D
114H3104-247	77272	117	19J
114H3104-249	77272	117	19E
114H3104-25	77272	117	47
114H3104-251	77272	117	38
114H3104-253	77272	117	37
114H3104-255	77272	117	19K
114H3104-257	77272	117	19F
114H3104-259	77272	117	19G
114H3104-261	77272	117	19L
114H3104-263	77272	117	19N
114H3104-265	77272	117	19O
114H3104-267	77272	117	28A
114H3104-269	77272	117	18
114H3104-271	77272	117	27A
114H3104-273	77272	117	17
114H3104-277	77272	117	19C
114H3104-279	77272	117	31
114H3104-281	77272	117	28
114H3104-283	77272	117	27
114H3104-285	77272	117	19A
114H3104-287	77272	117	44
114H3104-289	77272	117	45
114H3104-29	77272	117	49
114H3104-31	77272	117	51
114H3104-33	77272	117	52
114H3104-33	77272	129	26
114H3104-35	77272	117	32
114H3104-57	77272	117	14
114H3104-67	77272	117	
114H3104-69	77272	117	88
114H3104-7	77272	117	55
114H3104-75	77272	44	34
114H3104-77	77272	44	33
114H3104-9	77272	117	48
114H3150-106	77272	129	76
114H3150-109	77272	129	80B
114H3150-110	77272	QC1	79
114H3150-110	77272	143	1
114H3150-121	77272	119	146
114H3150-122	77272	119	145
114H3150-126	77272	129	
114H3150-127	77272	129	66
114H3150-129	77272	129	67
114H3150-145	77272	119	196
114H3150-146	77272	119	200
114H3150-149	77272	119	205
114H3150-164	77272	143	1
114H3150-34	77272	117	26
114H3150-35	77272	117	25
114H3150-36	77272	117	1
114H3150-42	77272	139	1
114H3150-48	77272	139	92
114H3150-54	77272	139	96
114H3150-58	77272	129	
114H3150-66	77272	129	75
114H4000-13	77272	102	
114H4000-13	77272	222	52
114H4000-14	77272	102	
114H4000-14	77272	244	46
114H4000-18	77272	102	
114H4000-18	77272	244	46
114H4000-22	77272	102	
114H4000-22	77272	244	46
114H4000-24	77272	244	46
114H4000-25	77272	222	52
114H4000-28	77272	222	52
114H4000-31	77272	222	52
114H4000-32	77272	244	46
114H4000-33	77272	222	52
114H4000-34	77272	244	46
114H4000-35	77272	102	
114H4000-35	77272	222	52
114H4000-36	77272	102	
114H4000-36	77272	244	46
114H4000-37	77272	102	
114H4000-37	77272	244	46

REFERENCE NUMBER	MFG CODE	FIG NUMBER	ITEM NUMBER	REFERENCE NUMBER	MFG CODE	FIG NUMBER	ITEM NUMBER
114H4000-38	77272	102		114H4023-1	77272	102	30
114H4000-38	77272	222	52	114H4024-1	77272	102	53A
114H4000-39	77272	102		114H4024-1	77272	103	3
114H4000-39	77272	222	52	114H4027-1	77272	102	37
114H4000-42	77272	102		114H4027-4	77272	102	37
114H4000-42	77272	222	52	114H4027-5	77272	102	
114H4000-43	77272	102		114H4032-2	77272	102	32
114H4000-43	77272	244	46	114H4034-1	77272	102	38
114H4000-44	77272	102		114H4034-1	77272	103	31
114H4000-44	77272	244	46	114H4035-1	77272	102	55
114H4000-45	77272	102		114H4035-1	77272	103	48
114H4000-45	77272	222	52	114H4035-2	77272	102	
114H4000-46	77272	102		114H4035-2	77272	103	
114H4000-46	77272	244	46	114H4035-3	77272	102	
114H4000-47	77272	102		114H4035-3	77272	103	
114H4000-47	77272	222	52	114H4036-1	77272	102	56
114H4000-48	77272	102		114H4036-1	77272	103	49
114H4000-48	77272	222	52	114H4040-1	77272	102	25
114H4000-49	77272	102		114H4040-1	77272	103	22A
114H4000-49	77272	244	46	114H4041-1	77272	102	
114H4002-12	77272	102	37	114H4041-2	77272	102	
114H4002-13	77272	102		114H4041-2	77272	103	
114H4002-15	77272	102	37	114H4042-1	77272	102	18
114H4002-17	77272	102	37D	114H4042-1	77272	103	17C
114H4002-18	77272	102		114H4043-1	77272	102	35
114H4002-19	77272	102	37	114H4044-4	77272	102	64
114H4002-20	77272	102		114H4044-5	77272	102	64
114H4002-21	77272	102	37D	114H4045-1	77272	102	29
114H4002-22	77272	102		114H4047-1	77272	102	59
114H4002-9	77272	102	37	114H4047-2	77272	102	
114H4004-2	77272	103		114H4047-3	77272	102	
114H4005-2	77272	103		114H4048-1	77272	102	40
114H4006-2	77272	103	52	114H4048-2	77272	102	41
114H4007-1	77272	102	40	114H4049-1	77272	102	56
114H4007-1	77272	103	33	114H4051-1	77272	102	1
114H4007-2	77272	102	41	114H4052-1	77272	102	37B
114H4007-2	77272	103	34	114H4052-1	77272	102	37F
114H4008-1	77272	102	60	114H4053-1	77272	102	55
114H4008-1	77272	103	53	114H4053-2	77272	102	
114H4009-2	77272	102	51	114H4054-1	77272	102	8
114H4009-2	77272	103	44	114H4054-2	77272	102	
114H4010-1	77272	102	48	114H4054-3	77272	102	
114H4010-1	77272	103	41	114H4055-1	77272	102	
114H4011-1	77272	102	44	114H4055-1	77272	103	
114H4011-1	77272	103	37	114H4061-1	77272	102	30
114H4012-1	77272	103	1	114H4062-1	77272	102	53B
114H4013-1	77272	102	8	114H4063-1	77272	102	59
114H4013-1	77272	103	10	114H4063-2	77272	102	
114H4014-1	77272	102	9	114H4100-1	77272	147	
114H4014-1	77272	103	11	114H4100-1	77272	228	102
114H4016-1	77272	102	17	114H4100-2	77272	147	1
114H4016-2	77272	102	17	114H4100-2	77272	228	102
114H4016-2	77272	103	17B	114H4101-1	77272	147	1
114H4017-2	77272	102	19	114H4101-1	77272	228	103
114H4017-2	77272	103	17D	114H4101-4	77272	147	1
114H4017-3	77272	102	19	114H4101-4	77272	228	103
114H4017-3	77272	103	17D	114H4102-1	77272	147	
114H4018-1	77272	102		114H4103-1	77272	147	
114H4018-2	77272	102		114H4104-2	77272	147	4
114H4018-2	77272	103		114H4105-1	77272	147	9
114H4018-3	77272	102		114H4106-1	77272	147	10
114H4018-3	77272	103		114H4107-1	77272	147	7
114H4019-1	77272	102	16	114H4109-1	77272	147	6
114H4019-1	77272	103	17A	114H4403-1	77272	228	
114H4020-1	77272	102	13	114H4412-1	77272	228	136
114H4020-1	77272	103	15	114H4413-1	77272	228	130A
114H4021-1	77272	102	7B	114H4413-2	77272	228	130A
114H4021-1	77272	103	9	114H4413-5	77272	228	
114H4022-4	77272	102	7	114H4413-6	77272	228	
114H4022-4	77272	103	7	114H4414-1	77272	228	130
114H4022-5	77272	102	7J	114H4414-2	77272	228	130

REFERENCE NUMBER	MFG CODE	FIG NUMBER	ITEM NUMBER
114H4414-5	77272	228	
114H4414-6	77272	228	
114H4501-1	77272	73	19
114H4501-2	77272	73	19
114H4502-1	77272	73	61
114H4503-2	77272	73	18A
114H4504-2	77272	73	28F
114H4504-4	77272	73	28F
114H4504-5	77272	73	28
114H4504-6	77272	73	28
114H4505-3	77272	73	63
114H4506-1	77272	73	26
114H4507-1	77272	73	66
114H4509-1	77272	73	30
114H4511-1	77272	72	31
114H4511-1	77272	72	62
114H4511-1	77272	73	7
114H4513-1	77272	73	59H
114H4514-1	77272	73	39I
114H4514-1	77272	73	61E
114H4515-1	77272	73	39
114H4515-2	77272	73	39
114H4516-1	77272	73	59E
114H4517-2	77272	73	44G
114H4518-2	77272	73	44M
114H4519-1	77272	73	44E
114H4520-2	77272	73	44H
114H4520-3	77272	73	44H
114H4525-1	77272	72	19
114H4525-1	77272	72	50
114H4525-1	77272	73	20
114H4526-2	77272	73	44F
114H4526-3	77272	73	44F
114H4527-1	77272	73	39L
114H4528-1	77272	72	28
114H4528-1	77272	72	59
114H4528-1	77272	73	4
114H4530-1	77272	73	61H
114H4532-1	77272	73	39K
114H4532-1	77272	73	61F
114H4534-1	77272	73	39C
114H4534-2	77272	73	39C
114H4536-2	77272	73	57A
114H4536-3	77272	73	54
114H4536-4	77272	73	53
114H4536-5	77272	73	57A
114H4540-1	77272	73	59
114H4542-1	77272	73	39A
114H4542-2	77272	73	39A
114H4543-2	77272	73	44
114H4544-1	77272	73	56
114H4545-1	77272	72	21
114H4545-1	77272	72	52
114H4545-1	77272	73	23
114H4546-1	77272	73	39B
114H4547-1	77272	73	33
114H4548-1	77272	73	16
114H4549-1	77272	73	65
114H4551-1	77272	73	55
114H4552-2	77272	73	44K
114H4553-1	77272	73	57
114H4554-1	77272	73	28E
114H4554-1	77272	73	63A
114H4554-2	77272	73	28E
114H4554-3	77272	73	28E
114H4555-1	77272	73	52
114H4555-2	77272	73	57B
114H4555-3	77272	73	54
114H4556-2	77272	73	35
114H4557-1	77272	72	34
114H4557-1	77272	72	65
114H4557-1	77272	73	10
114H4562-1	77272	72	33
114H4562-1	77272	72	64
114H4562-1	77272	73	9
114H4563-1	77272	73	59F
114H4564-1	77272	73	59A
114H4564-2	77272	73	59B
114H4564-3	77272	73	59C
114H4565-2	77272	73	39B
114H4566-1	77272	73	39E
114H4566-1	77272	73	61A
114H4566-2	77272	73	39F
114H4566-2	77272	73	61B
114H4566-3	77272	73	39H
114H4566-3	77272	73	61C
114H4567-1	77272	73	44I
114H4568-1	77272	73	47
114H4569-1	77272	73	34
114H4570-1	77272	73	51
114H4571-1	77272	73	50
114H4572-1	77272	73	48
114H4573-1	77272	73	42
114H4574-1	77272	73	44B
114H4575-1	77272	73	44I
114H4576-1	77272	73	44G
114H4576-1	77272	73	44J
114H4577-1	77272	73	44C
114H4578-1	77272	73	44I
114H4579-1	77272	73	44I
114H4600-1	77272	107	
114H4600-1	77272	139	53
114H4600-2	77272	139	53
114H4600-3	77272	139	53
114H4601-1	77272	107	14
114H4616-1	77272	107	8
114H4616-1	77272	108	3
114H4620-1	77272	107	1
114H4621-1	77272	107	
114H4622-1	77272	107	
114H4623-1	77272	107	
114H4624-1	77272	107	
114H4625-1	77272	107	11
114H4626-1	77272	107	9
114H4627-1	77272	107	12
114H4628-1	77272	107	6
114H4628-1	77272	108	2
114H4629-1	77272	107	3
114H4630-1	77272	107	4
114H4631-1	77272	107	5
114H4700-1	77272	21	5B
114H4700-2	77272	21	5B
114H4700-3	77272	21	5B
114H4700-4	77272	21	5B
--			
114H4800-17	77272	222	90
114H4800-18	77272	244	61
114H4800-19	77272	222	90
114H4800-20	77272	244	61
114H4800-23	77272	222	90
114H4800-24	77272	244	61
114H4800-27	77272	222	90
114H4800-28	77272	244	61
114H4800-29	77272	222	90
114H4800-30	77272	244	61
114H4800-31	77272	103	
114H4800-31	77272	222	90
114H4800-32	77272	103	
114H4800-32	77272	244	61
114H4800-33	77272	103	
114H4800-33	77272	222	90
114H4800-34	77272	103	

REFERENCE NUMBER	MFG CODE	FIG NUMBER	ITEM NUMBER
114H4800-34	77272	244	61
114H4800-35	77272	103	
114H4800-35	77272	222	90
114H4800-36	77272	103	
114H4800-36	77272	244	61
114H4800-37	77272	103	
114H4800-37	77272	222	90
114H4800-38	77272	103	
114H4800-38	77272	244	61
114H4800-39	77272	103	
114H4800-39	77272	222	90
114H4800-40	77272	103	
114H4800-40	77272	244	61
114H4800-43	77272	103	
114H4800-43	77272	222	90
114H4800-44	77272	103	
114H4800-44	77272	244	61
114H4800-45	77272	103	
114H4800-45	77272	222	90
114H4800-46	77272	103	
114H4800-46	77272	244	61
114H4801-1	77272	103	57
114H4801-3	77272	103	57
114H4802-10	77272	103	30
114H4802-11	77272	103	
114H4802-6	77272	103	30
114H4802-7	77272	103	
114H4802-8	77272	103	30
114H4802-9	77272	103	
114H4803-1	77272	103	26
114H4804-1	77272	102	29
114H4804-1	77272	103	25
114H4805-1	77272	103	28
114H5600-10	77272	228	101A
114H5600-10	77272	228	101B
114H5600-14	77272	228	101B
114H5600-15	77272	228	101B
114H5600-16	77272	228	101A
114H5600-16	77272	228	101B
114H5600-17	77272	228	101B
114H5600-3	77272	228	101A
114H5600-8	77272	228	101A
114H5600-9	77272	228	101A
114H5700-70	77272	228	128
114H5700-77	77272	228	128
114H5800-33	77272	228	
114H5800-34	77272	228	
114H5800-35	77272	228	
114H5800-36	77272	228	
114H5800-43	77272	228	
114H5800-44	77272	228	
114H5800-45	77272	228	
114H5800-46	77272	228	
114H5805-1	77272	228	138
114H5805-2	77272	228	138
114H5805-3	77272	228	138
114H5807-1	77272	228	139
114H5900-1	77272	72	17
114H5900-1	77272	72	45
114H5900-1	77272	73	
114H5900-2	77272	72	17
114H5900-2	77272	72	45
114H5900-2	77272	73	
114H5900-3	77272	72	17
114H5900-3	77272	72	45
114H5900-3	77272	73	
114H5900-4	77272	72	17
114H5900-4	77272	72	45
114H5900-4	77272	73	
114H5900-6	77272	72	17
114H5900-6	77272	72	45
114H5900-6	77272	73	
114H5900-7	77272	72	17
114H5900-7	77272	72	45
114H5900-7	77272	73	
114H5900-8	77272	72	17
114H5900-8	77272	72	45
114H5900-8	77272	73	
114H5901-2	77272	73	30B
114H5901-3	77272	73	30
114H5901-4	77272	73	30B
114H5901-5	77272	73	30
114H5901-6	77272	73	30B
114H5902-5	77272	73	41
114H5902-5	77272	73	43
114H5902-6	77272	73	42
114H5902-6	77272	73	44
114H5902-7	77272	73	41
114H5902-7	77272	73	44
114H5902-9	77272	73	42
114H5902-9	77272	73	43
114H5903-1	77272	73	44F
114H5903-2	77272	73	44F
114H5903-3	77272	73	44F
114H5903-4	77272	73	44F
114H5903-5	77272	73	44F
114H5903-6	77272	73	44F
114H5904-1	77272	73	44H
114H5904-2	77272	73	44H
114H5905-1	77272	73	44G
114H5905-2	77272	73	44G
114H5905-3	77272	73	44G
114H5905-4	77272	73	44G
114H5905-5	77272	73	44G
114H5905-6	77272	73	44G
114H5906-1	77272	73	44I
114H5907-1	77272	73	18
114H5908-1	77272	73	24
114H5909-1	77272	72	25
114H5909-1	77272	72	56
114H5909-1	77272	73	3
114H5910-1	77272	72	32
114H5910-1	77272	72	63
114H5910-1	77272	73	8
114H5911-1	77272	73	46
114H6500-10	77272	228	125
114H6500-11	77272	228	123
114H6500-12	77272	228	126
114H6500-13	77272	228	127
114H6500-14	77272	228	128
114H6500-19	77272	228	128
114H6500-20	77272	228	122
114H6500-21	77272	228	124
114H6500-22	77272	228	125
114H6500-23	77272	228	123
114H6500-24	77272	228	126
114H6500-25	77272	228	127
114H6500-7	77272	228	128
114H6500-8	77272	228	122
114H6500-9	77272	228	124
114H6600-1	77272	222	157
114H6600-11	77272	102	
114H6600-11	77272	222	157
114H6600-12	77272	102	
114H6600-12	77272	244	46
114H6600-13	77272	102	
114H6600-13	77272	222	157
114H6600-15	77272	102	
114H6600-15	77272	222	157
114H6600-18	77272	102	
114H6600-18	77272	244	46

REFERENCE NUMBER	MFG CODE	FIG NUMBER	ITEM NUMBER
114H6600-19	77272	222	157
114H6600-2	77272	244	46
114H6600-20	77272	244	46
114H6600-3	77272	102	
114H6600-3	77272	222	157
114H6600-3	77272	222	52
114H6600-4	77272	102	
114H6600-4	77272	244	46
114H6600-5	77272	102	
114H6600-5	77272	222	157
114H6600-5	77272	222	52
114H6600-6	77272	102	
114H6600-6	77272	244	46
114H6600-7	77272	102	
114H6600-7	77272	222	157
114H6600-7	77272	222	52
114H6600-8	77272	102	
114H6600-8	77272	244	46
114H6601-1	77272	102	37D
114H6602-3	77272	102	62
114H6602-4	77272	102	63
114H6603-1	77272	102	44
114H6603-1	77272	103	37
114H6604-2	77272	102	48
114H6604-2	77272	103	41
114H6605-1	77272	102	61
114H6605-1	77272	103	54
114H6606-1	77272	102	35
114H6607-1	77272	102	
114H6607-1	77272	103	
114H6608-1	77272	102	24
114H6608-1	77272	103	22
114H6609-1	77272	103	
114H6610-1	77272	102	26
114H6610-1	77272	103	22B
114H6612-1	77272	102	7H
114H6612-1	77272	103	6F
114H6613-1	77272	103	6G
114H6613-2	77272	102	7I
114H6613-3	77272	102	7I
114H6616-1	77272	102	7F
114H6616-1	77272	103	6D
114H6617-1	77272	102	7C
114H6617-1	77272	103	6A
114H6617-1	77272	222	140
114H6617-1	77272	222	148
114H6617-1	77272	244	15
114H6617-1	77272	244	24
114H6618-1	77272	102	7G
114H6618-1	77272	103	6E
114H6619-1	77272	102	7F
114H6619-1	77272	103	6D
114H6700-1	77272	222	171
114H6700-12	77272	103	
114H6700-12	77272	244	61
114H6700-13	77272	103	
114H6700-13	77272	222	171
114H6700-14	77272	244	61
114H6700-2	77272	244	61
114H6700-3	77272	103	
114H6700-3	77272	222	171
114H6700-3	77272	222	90
114H6700-4	77272	103	
114H6700-4	77272	244	61
114H6700-5	77272	103	
114H6700-5	77272	222	171
114H6700-5	77272	222	90
114H6700-6	77272	103	
114H6700-6	77272	244	61
114H6700-7	77272	103	
114H6700-7	77272	222	171
114H6700-8	77272	103	
114H6700-8	77272	244	61
114H6700-9	77272	103	
114H6700-9	77272	222	171
114H6701-3	77272	102	62
114H6701-3	77272	103	55
114H6701-4	77272	102	63
114H6701-4	77272	103	56
114H6701-5	77272	103	55
114H6701-6	77272	103	56
114H6702-1	77272	103	28
114H6703-1	77272	102	61
114H6703-1	77272	103	54
114H6800-1	77272	72	76
114H6800-1	77272	74	
114H6800-2	77272	72	76
114H6800-2	77272	74	
114H6800-3	77272	72	76
114H6800-3	77272	74	
114H6801-1	77272	74	
114H6801-2	77272	74	
114H6801-3	77272	74	
114H6802-1	77272	74	75
114H6802-3	77272	74	75
114H6803-1	77272	72	85
114H6803-1	77272	74	76
114H6804-1	77272	74	39A
114H6804-2	77272	74	39A
114H6805-1	77272	74	40
114H6805-3	77272	74	40
114H6806-1	77272	74	41
114H6807-1	77272	74	42
114H6808-1	77272	74	43
114H6809-1	77272	74	44
114H6810-1	77272	74	21
114H6813-1	77272	74	22
114H6814-1	77272	74	23
114H6815-1	77272	74	24
114H6816-1	77272	74	17
114H6819-1	77272	74	55
114H6820-1	77272	74	54
114H6821-1	77272	74	51
114H6822-1	77272	74	50
114H6822-2	77272	74	48
114H6823-1	77272	74	49
114H6823-2	77272	74	47
114H6824-1	77272	74	31
114H6825-1	77272	74	30
114H6826-1	77272	74	35
114H6827-1	77272	74	36
114H6828-1	77272	74	68
114H6828-2	77272	74	68
114H6829-1	77272	74	70
114H6830-1	77272	74	71
114H6831-1	77272	74	72
114H6831-2	77272	74	72
114H6832-1	77272	74	73
114H6832-2	77272	74	73
114H6833-1	77272	74	74
114H6834-1	77272	74	62
114H6835-1	77272	74	60
114H6836-1	77272	74	59
114H6837-1	77272	74	61
114H6838-1	77272	74	63A
114H6838-2	77272	74	63A
114H6839-1	77272	74	64
114H6840-1	77272	74	65
114H6841-1	77272	74	58
114H6842-1	77272	74	71
114H6843-1	77272	72	90
114H6843-1	77272	74	1

REFERENCE NUMBER	MFG CODE	FIG NUMBER	ITEM NUMBER
114H6844-1	77272	72	101
114H6844-1	77272	74	12
114H6845-2	77272	72	100
114H6845-2	77272	74	11
114H6846-1	77272	72	99
114H6846-1	77272	74	10
114H6847-1	77272	72	96
114H6847-1	77272	74	7
114H6849-1	77272	72	91
114H6849-1	77272	74	2
114H7000-10	77272	228	125
114H7000-11	77272	228	126
114H7000-12	77272	228	127
114H7000-13	77272	228	122
114H7000-14	77272	228	123
114H7000-15	77272	228	124
114H7000-16	77272	228	125
114H7000-5	77272	228	126
114H7000-6	77272	228	127
114H7000-7	77272	228	122
114H7000-8	77272	228	123
114H7000-9	77272	228	124
114H7001-3	77272	228	
114H7001-4	77272	228	
114H7002-2	77272	228	138
114H7011-1	77272	228	136
114H7012-1	77272	228	148
114H7100-1	77272	182	11
114H7100-1	77272	185	
114H7100-11	77272	185	
114H7100-12	77272	185	
114H7100-13	77272	185	
114H7100-18	77272	182	11
114H7100-18	77272	185	
114H7100-5	77272	185	14
114H7100-6	77272	185	
114LK103-1	77272	59	
114LK103-1	77272	KITS	
114LK104-1	77272	59	
114LK104-1	77272	KITS	
114LK105-2	77272	51	
114LK105-2	77272	KITS	
114LK106-1	77272	51	
114LK106-1	77272	KITS	
114LK106-2	77272	51	
114LK106-2	77272	KITS	
114LK107-1	77272	53	
114LK107-1	77272	KITS	
114LK108-1	77272	53	
114LK108-1	77272	KITS	
114LK113-1	77272	54	
114LK113-2	77272	54	
114LK113-2	77272	KITS	
114LK114-1	77272	54	
114LK114-1	77272	KITS	
114LK117-1	77272	45	
114LK117-1	77272	KITS	
114LK118-1	77272	49	
114LK118-1	77272	KITS	
114LK119-1	77272	49	
114LK120-1	77272	47	
114LK120-1	77272	KITS	
114LK121-1	77272	47	
114LK121-1	77272	KITS	
114LK123-2	77272	51	
114LK123-2	77272	KITS	
114LK124-1	77272	51	
114LK124-1	77272	KITS	
114L1001-1	77272	43	
114L1001-2	77272	43	
114L1001-3	77272	43	
114L1001-4	77272	43	
114L1001-5	77272	43	
114L1001-6	77272	43	
114L1001-7	77272	43	
114L1001-8	77272	43	
114L1010-3	77272	43	15
114L1010-3	77272	51	
114L1010-7	77272	43	15
114L1010-7	77272	51	
114L1020-1	77272	51	31
114L1020-3	77272	51	31
114L1021-1	77272	51	
114L1021-2	77272	51	
114L1022-1	77272	51	76
114L1022-2	77272	51	
114L1023-1	77272	51	4
114L1023-2	77272	51	4
114L1024-1	77272	49	34
114L1024-1	77272	51	24
114L1025-1	77272	51	16
114L1026-1		51	53
114L1026-1		KITS	
114L1026-1	77272	51	53
114L1027-1		KITS	
114L1027-1	77272	49	33
114L1027-1	77272	51	25
114L1028-1	77272	51	60
114L1029-1		51	50
114L1029-1		KITS	
114L1029-1	77272	51	50
114L1030-1	77272	44	25
114L1030-1	77272	51	12
114L1031-1		KITS	
114L1031-1	77272	51	36
114L1032-1		51	44
114L1032-1		KITS	
114L1032-3		51	44
114L1032-3		KITS	
114L1033-1		51	37
114L1033-1		KITS	
114L1034-1	77272	51	40
114L1034-2		51	40
114L1034-2		KITS	
114L1035-1		51	35B
114L1035-1		KITS	
114L1035-1	77272	51	35B
114L1036-1		KITS	
114L1036-1	77272	51	41
114L1036-2	77272	51	36C
114L1037-1		51	42
114L1037-1		KITS	
114L1038-1		51	34
114L1038-1		KITS	
114L1038-1	77272	51	34
114L1039-1		51	48
114L1039-1		KITS	
114L1039-1	77272	51	48
114L1040-1		51	33
114L1040-1		KITS	
114L1040-1	77272	51	33
114L1041-1		51	45
114L1041-1		KITS	
114L1041-1	77272	51	45
114L1042-1		51	28
114L1042-1		KITS	
114L1043-1		51	29
114L1043-1		KITS	
114L1044-1	77272	51	64
114L1045-1	77272	51	62B
114L1046-3	77272	51	65
114L1047-1		51	56

REFERENCE NUMBER	MFG CODE	FIG NUMBER	ITEM NUMBER	REFERENCE NUMBER	MFG CODE	FIG NUMBER	ITEM NUMBER
114L1047-1		KITS		114L1323-1	77272	51	60
114L1047-1	77272	51	56	114L1325-1	77272	51	84
114L1048-1		51	58	114L2001-1	77272	44	
114L1048-1		KITS		114L2001-10	77272	44	
114L1049-1	77272	51	8	114L2001-2	77272	44	
114L1050-1	77272	51		114L2001-9	77272	44	
114L1051-1	77272	51		114L2010-7	77272	44	
114L1052-1		51	6	114L2020-1	77272	59	48
114L1052-1		KITS		114L2021-1	77272	59	
114L1052-1	77272	51	6	114L2022-1	77272	59	31
114L1053-1		51	9	114L2023-1	77272	44	
114L1053-1		KITS		114L2024-1	77272	44	
114L1054-1		KITS		114L2024-2	77272	44	
114L1055-1		51	7	114L2025-1	77272	53	9
114L1055-1		KITS		114L2025-3	77272	53	9
114L1055-1	77272	51	7	114L2026-1	77272	53	8
114L1056-1		51	49	114L2026-3	77272	53	
114L1056-1		KITS		114L2027-1	77272	53	2
114L1056-1	77272	51	49	114L2028-1	77272	59	2
114L1057-1		51	5	114L2029-1	77272	44	23
114L1057-1		KITS		114L2030-1	77272	59	21
114L1057-1	77272	51	5	114L2031-1	77272	44	17
114L1058-1	77272	51	19	114L2031-1	77272	53	
114L1058-2	77272	51	19A	114L2031-3	77272	44	17
114L1058-3	77272	51	19A	114L2031-3	77272	53	
114L1059-1		KITS		114L2031-4	77272	53	
114L1059-1	77272	51	1	114L2032-3	77272	44	26
114L1059-2	77272	51	2	114L2032-3	77272	59	
114L1059-3		KITS		114L2032-4	77272	44	26
114L1059-3	77272	51	2	114L2032-4	77272	59	
114L1060-1		51	19B	114L2032-7	77272	44	26
114L1060-1		KITS		114L2032-7	77272	59	
114L1061-1		51	11	114L2033-3	77272	59	36B
114L1061-1		51	11A	114L2034-3	77272	59	39
114L1061-1		KITS		114L2035-1	77272	59	
114L1061-2		KITS		114L2036-1	77272	59	
114L1062-1		KITS		114L2037-1	77272	59	
114L1063-1		51	30	114L2038-1	77272	59	34
114L1063-1		KITS		114L2039-6	77272	59	37
114L1063-2		51	14	114L2040-1		59	45
114L1063-2		KITS		114L2040-1		KITS	
114L1064-1	77272	51		114L2043-1	77272	59	26
114L1064-2	77272	51		114L2044-1	77272	59	5
114L1065-3	77272	51		114L2045-1	77272	59	1A
114L1066-1		51	26	114L2046-1		59	4
114L1066-1		KITS		114L2046-1		KITS	
114L1067-1		51	27	114L2047-1	77272	59	8
114L1067-1		KITS		114L2048-1	77272	59	24
114L1309-2	77272	51	27	114L2049-1	77272	59	13A
114L1310-1		51	79	114L2051-1		KITS	
114L1310-1		KITS		114L2051-1	77272	59	19
114L1311-2	77272	51	36B	114L2052-1	77272	59	42
114L1313-1		51	37	114L2054-1	77272	44	25G
114L1313-1		KITS		114L2054-1	77272	45	13B
114L1314-1	77272	51		114L2055-1	77272	44	16
114L1314-3	77272	51	85	114L2056-1	77272	44	22B
114L1316-1		51	82	114L2057-1	77272	44	24
114L1316-1		KITS		114L2058-1	77272	59	41
114L1317-1	77272	49	60	114L2059-1	77272	53	10
114L1317-1	77272	51	71	114L2060-1	77272	53	14
114L1318-1	77272	49	59	114L2061-1		54	44
114L1318-1	77272	51	67	114L2061-1		KITS	
114L1319-1	77272	49	61	114L2061-1	77272	53	11
114L1319-2	77272	51	70	114L2062-1	77272	53	21
114L1320-1	77272	49	57E	114L2063-1	77272	53	26
114L1320-1	77272	51	68	114L2063-2		54	35
114L1321-12		KITS		114L2063-2		KITS	
114L1321-12	77272	51	36A	114L2064-1	77272	44	14A
114L1321-2	77272	51		114L2065-1	77272	44	15
114L1322-1	77272	51	76	114L2066-1	77272	53	24
114L1322-2	77272	51		114L2066-2		54	32

REFERENCE NUMBER	MFG CODE	FIG NUMBER	ITEM NUMBER
114L2066-2		KITS	
114L2067-1	77272	53	37
114L2067-1	77272	54	28
114L2068-1	77272	53	25
114L2068-1	77272	54	31
114L2069-1		KITS	
114L2069-1	77272	53	38
114L2069-1	77272	54	27
114L2070-1	77272	53	28
114L2071-1	77272	53	28A
114L2071-1	77272	54	20
114L2072-1	77272	53	36
114L2072-2		54	21
114L2072-2		KITS	
114L2073-1		53	29
114L2073-1		54	18
114L2073-1		KITS	
114L2074-1	77272	53	32
114L2074-1	77272	54	19
114L2075-1		54	25
114L2075-1		KITS	
114L2075-1	77272	53	27
114L2076-1	77272	53	18
114L2077-1	77272	59	32
114L2078-1	77272	44	22A
114L2079-1	77272	59	40
114L2080-1	77272	44	18C
114L2081-1	77272	53	33
114L2081-3		54	16
114L2081-3		KITS	
114L2082-1	77272	44	
114L2083-1	77272	44	
114L2084-1		53	19
114L2084-1		54	34
114L2084-1		KITS	
114L2085-1	77272	53	20
114L2086-1	77272	59	33
114L2087-1	77272	44	19
114L2088-1	77272	44	
114L2089-1		53	45
114L2089-1		KITS	
114L2090-1		59	43
114L2090-1		KITS	
114L2091-1	77272	59	25
114L2092-1	77272	59	27
114L2094-1		53	30
114L2094-1		54	26
114L2094-1		KITS	
114L2153-1	77272	59	16B
114L2155-3	77272	59	16F
114L2156-1	77272	59	16A
114L2301-1	77272	45	
114L2301-2	77272	45	
114L2301-3	77272	45	
114L2301-4	77272	45	
114L2301-5	77272	43	
114L2301-5	77272	45	8E
114L2310-2	77272	45	
114L2312-1	77272	49	24
114L2313-1		49	45A
114L2313-1		KITS	
114L2316-2	77272	49	10
114L2317-1	77272	49	43C
114L2319-2	77272	45	17A
114L2319-2	77272	47	
114L2320-1	77272	49	21
114L2321-1	77272	49	13B
114L2322-5	77272	45	32
114L2322-5	77272	49	35
114L2323-3	77272	45	
114L2324-1	77272	45	
114L2324-3	77272	45	
114L2325-2	77272	54	45
114L2326-1	77272	54	12
114L2326-3	77272	54	
114L2327-1	77272	54	8
114L2328-1	77272	49	22
114L2329-2	77272	45	12A
114L2330-2	77272	45	14A
114L2331-2	77272	45	10
114L2331-2	77272	54	1
114L2331-3		KITS	
114L2332-3	77272	45	15
114L2332-3	77272	49	
114L2333-2	77272	49	62
114L2334-1	77272	49	55
114L2335-1	77272	49	36
114L2336-1	77272	49	38
114L2337-1	77272	49	40
114L2338-1	77272	49	6
114L2340-1	77272	49	20
114L2341-1	77272	54	49
114L2343-1	77272	49	11
114L2344-1	77272	49	46
114L2345-1	77272	49	18
114L2346-1	77272	49	44
114L2347-1	77272	49	8
114L2348-1	77272	49	16
114L2349-1	77272	49	25
114L2351-1	77272	47	4
114L2352-1	77272	49	12
114L2353-1	77272	44	25H
114L2353-1	77272	45	13C
114L2355-1	77272	49	52
114L2356-1	77272	45	12
114L2357-1	77272	45	
114L2358-1	77272	49	18
114L2359-1		54	42
114L2359-1		KITS	
114L2360-1	77272	54	38
114L2362-1	77272	54	46
114L2363-2	77272	54	50
114L2364-1	77272	49	45
114L2365-1	77272	45	14
114L2370-2	77272	54	17
114L2373-1	77272	54	7
114L2376-1		KITS	
114L2376-1	77272	54	6
114L2378-1	77272	45	12
114L2379-1	77272	49	19
114L2382-2	77272	45	
114L2382-4	77272	45	
114L2383-3	77272	45	
114L2384-1	77272	49	57A
114L2385-1		54	33
114L2385-1		KITS	
114L2386-1	77272	49	41
114L2387-1	77272	49	43A
114L2388-1	77272	49	43B
114L2389-1	77272	49	43
114L2390-1	77272	49	14
114L2391-1	77272	49	28
114L2392-1		47	17
114L2392-1		KITS	
114L2394-1	77272	47	6
114L2395-1	77272	47	13
114L2396-1	77272	47	12
114L2397-3	77272	47	19
114L2398-1		47	15
114L2398-1		KITS	
114L2399-2		47	14
114L2399-2		KITS	

REFERENCE NUMBER	MFG CODE	FIG NUMBER	ITEM NUMBER	REFERENCE NUMBER	MFG CODE	FIG NUMBER	ITEM NUMBER
114L2401-1	77272	45	25	114M1003-5	77272	95	
114L2410-1	77272	45	29	114M1003-7	77272	116	
114L2410-3	77272	45	29	114M1003-7	77272	117	
114L2418-1	77272	45	29F	114M1003-7	77272	119	
114L2419-2	77272	45	29A	114M1003-7	77272	129	
114L2423-2	77272	45	29G	114M1003-7	77272	139	
114L2424-1	77272	49	2	114M1004-1	77272	62	60
114L2476-1	77272	45	26	114M1004-1	77272	217	
114L2499-1		KITS		114M1004-2	77272	62	68
114L2499-1	77272	45	31A	114M1004-2	77272	143	
114L2510-1	77272	45		114M1004-3	77272	62	60
114L2511-1	77272	45		114M1004-3	77272	217A	
114L2512-1	77272	45		114M1004-4	77272	62	68
114L2513-1	77272	45	9	114M1004-4	77272	143	
114L2514-1	77272	45		114M1004-7	77272	62	60
114L2515-1	77272	45	11B	114M1004-7	77272	217B	
114L2516-1	77272	45	10B	114M1004-8	77272	62	68
114L2520-1	77272	49	54	114M1004-8	77272	143	
114L2522-1		47	9	114M2000-2	77272	204	
114L2522-1		KITS		114M2000-2	77272	206	
114L2524-1	77272	45	28	114M2031-2	77272	206	
114L2525-1	77272	49	11A	114M2032-2	77272	206	
114L2528-1	77272	49	64	114M2047	77272	196	
114L2529-1	77272	45		114PG468-29	77272	219	31
114L2531-1	77272	49		114PS100-10	77272	217B	15
114L2532-1	77272	49	1	114PS100-16	77272	QC1	65
114L2533-1	77272	45		114PS100-16	77272	217	13
114L2534-1	77272	45	30	114PS100-2	77272	QC1	48
114L2535-1	77272	45		114PS100-3	77272	217	5
114M1001-1	77272	109		114PS100-30	77272	257	
114M1001-1	77272	110		114PS100-39	77272	257	
114M1001-1	77272	112		114PS100-6	77272	217	11
114M1001-1	77272	115		114PS100-68	77272	221	134
114M1001-3	77272	34	13	114PS100-69	77272	221	104
114M1001-3	77272	34	14	114PS100-70	77272	221	99
114M1001-3	77272	34	19	114PS100-71	77272	221	97
114M1001-3	77272	178		114PS100-72	77272	221	93
114M1001-3	77272	179		114PS100-73	77272	221	86
114M1001-3	77272	250	6	114PS100-76	77272	221	106
114M1001-3	77272	257		114PS100-83	77272	218	61
114M1001-5	77272	95		114PS100-83	77272	219	78A
114M1001-6	77272	34	13	114PS100-83	77272	219A	194
114M1001-6	77272	34	19	114PS100-83	77272	219A	99
114M1001-6	77272	178		114PS100-87	77272	219	26A
114M1001-6	77272	180		114PS100-87	77272	219A	97
114M1001-6	77272	250	6	114PS100-88	77272	219	71A
114M1001-6	77272	257		114PS100-88	77272	219A	190
114M1002-1	77272	115		114PS100-89	77272	217A	12
114M1002-1	77272	116		114PS100-90	77272	221	110
114M1002-2	77272	13		114PS100-92	77272	221	121
114M1002-2	77272	211		114PS100-97	77272	217B	8
114M1002-2	77272	213		114PS200-1	77272	66	35
114M1002-2	77272	220		114PS200-2	77272	66	35
114M1002-2	77272	221		114PS200-2	77272	QC1	42
114M1002-3	77272	34	56	114PS200-3	77272	66	35
114M1002-3	77272	178		114PS200-4	77272	66	35
114M1002-3	77272	250	8	114PS201-1	77272	66	39
114M1002-3	77272	257		114PS201-2	77272	66	39
114M1002-5	77272	95		114PS202-1	77272	66	
114M1003-1	77272	116		114PS202-1	77272	66	6
114M1003-1	77272	117		114PS203-1	77272	258	12
114M1003-1	77272	119		114PS204-2	77272	66	35
114M1003-1	77272	129		114PS205-1	77272	66	39
114M1003-1	77272	139		114PS205-2	77272	66	39
114M1003-2	77272	213		114PS205-2	77272	QC1	43
114M1003-2	77272	220		114PS205-2	77272	67A	
114M1003-2	77272	221		114PS206-2	77272	66	35
114M1003-2	77272	258		114PS206-2	77272	68	
114M1003-2	77272	273		114PS206-3	77272	66	35
114M1003-3	77272	250	9	114PS206-3	77272	68	
114M1003-3	77272	257		114PS208-1	77272	62	33

REFERENCE NUMBER	MFG CODE	FIG NUMBER	ITEM NUMBER
114PS208-1	77272	64A	
114PS208-2	77272	62	33
114PS209-1	77272	249	24
114PS211-1	77272	249	26
114PS219-1	77272	62	
114PS219-2	77272	62	
114PS221-1	77272	66	25
114PS401-1	77272	213	26
114PS401-1	77272	216	
114PS401-2	77272	213	26
114PS401-2	77272	213	6
114PS401-2	77272	216	
114PS401-2	77272	220	4
114PS401-2	77272	221	33
114PS401-2	77272	221	41
114PS401-2	77272	221	56
114PS401-2	77272	221	69
114PS402-1	77272	213	54
114PS402-1	77272	214	
114PS402-1	77272	220	53
114PS402-2	77272	213	54
114PS402-2	77272	214	
114PS402-2	77272	220	53
114PS406-2	77272	221	70
114PS407-1	77272	213	58
114PS407-1	77272	220	55
114PS407-1	77272	221	133
114PS407-1	77272	221	39
114PS407-1	77272	221	95
114PS410-1	77272	211	48
114PS410-2	77272	218	51
114PS410-2	77272	219	46
114PS410-2	77272	219	93
114PS420-1	77272	211	53
114PS420-43	77272	211	53
114PS423-12	77272	218	38
114PS423-12	77272	221A	
114PS423-13	77272	218	48
114PS423-13	77272	221A	
114PS423-5	77272	211	42
114PS423-7	77272	211	43
114PS433-1	77272	211	9A
114PS433-1	77272	218	10
114PS433-1	77272	218	14
114PS433-1	77272	219	59
114PS433-1	77272	219	8
114PS433-11	77272	211	47
114PS433-11	77272	218	40
114PS433-11	77272	218	50
114PS433-13	77272	211	16
114PS433-13	77272	218	21
114PS433-13	77272	218	34
114PS433-13	77272	219	13
114PS433-13	77272	219	64
114PS433-13	77272	219	68
114PS433-13	77272	219A	163
114PS433-13	77272	219A	58
114PS433-15	77272	218	40A
114PS433-15	77272	219	43
114PS433-15	77272	219	84
114PS433-15	77272	219A	119
114PS433-15	77272	219A	14
114PS433-3	77272	211	5
114PS433-3	77272	218	10
114PS433-3	77272	218	14
114PS433-5	77272	211	41
114PS433-5	77272	218	45
114PS433-5	77272	219	
114PS433-5	77272	219	37
114PS433-7	77272	211	36
114PS433-7	77272	211	52
114PS433-7	77272	218	5
114PS433-7	77272	218	55
114PS433-7	77272	219	3
114PS433-7	77272	219	50
114PS433-7	77272	219	54
114PS433-7	77272	219	97
114PS446-3	77272	219	41
114PS446-3	77272	219	82
114PS446-3	77272	221A	
114PS448-15	77272	218	
114PS449-12	77272	219	51
114PS449-12	77272	219	98
114PS449-13	77272	219	
114PS454-1	77272	219	
114PS454-1	77272	219A	170
114PS454-1	77272	219A	65
114PS454-2	77272	218	
114PS455-1	77272	218	74
114PS456-1	77272	218	74
114PS456-1	77272	220	7
114PS456-1	77272	221	30
114PS456-1	77272	221	70
114PS457-1	77272	218	3
114PS457-1	77272	219A	108
114PS457-1	77272	219A	3
114PS457-2	77272	218	3
114PS457-2	77272	219A	108
114PS457-2	77272	219A	3
114PS458-1	77272	218	56
114PS459-1	77272	219A	105
114PS459-1	77272	219A	198
114PS460-1	77272	221	130
114PS460-1	77272	221	88
114PS462-1	77272	218	20
114PS462-1	77272	219A	144
114PS462-1	77272	219A	149
114PS462-1	77272	219A	43
114PS462-2	77272	218	20B
114PS462-3	77272	218	20A
114PS462-3	77272	219A	146
114PS462-3	77272	219A	45
114PS462-4	77272	219A	144
114PS462-4	77272	219A	149
114PS462-4	77272	219A	43
114PS462-5	77272	218	20B
114PS462-6	77272	218	20A
114PS462-6	77272	219A	146
114PS462-6	77272	219A	45
114PS465-1	77272	219A	123
114PS465-1	77272	219A	18
114PS466-33	77272	213	61
114PS466-35	77272	213	62
114PS466-39	77272	213	61A
114PS466-39	77272	220	56
114PS466-40	77272	213	62A
114PS466-40	77272	220	57
114PS468-23	77272	221	121
114PS468-24	77272	221	131
114PS468-25	77272	221	129
114PS468-26	77272	221	93
114PS468-27	77272	221	106
114PS468-28	77272	219	31
114PS468-28	77272	221	80
114PS468-28	77272	221	87
114PS468-29	77272	221	80
114PS468-29	77272	221	87
114PS468-30	77272	221	134
114PS468-31	77272	221	110
114PS468-33	77272	221	77
114PS468-38	77272	213	60
114PS469-1	77272	218	10

REFERENCE NUMBER	MFG CODE	FIG NUMBER	ITEM NUMBER	REFERENCE NUMBER	MFG CODE	FIG NUMBER	ITEM NUMBER
114PS469-1	77272	218	14	114P1010-1	77272	63	
114PS469-1	77272	219A	159	114P1030-25	77272	217	25
114PS469-1	77272	219A	39	114P1030-44	77272	217	24
114PS469-2	77272	218	45A	114P1030-45	77272	217	24
114PS469-2	77272	219A	113	114P1030-65	77272	217	24
114PS469-2	77272	219A	8	114P1030-66	77272	217	25
114PS471-1	77272	218	48	114P1031-1	77272	QC1	47
114PS471-1	77272	221A		114P1031-11	77272	273	11D
114PS471-2	77272	218	38	114P1031-17	77272	QC1	61
114PS471-2	77272	221A		114P1031-21	77272	217	13
114PS472-1	77272	219	41	114P1031-23	77272	257	2
114PS472-1	77272	219	82	114P1031-5	77272	QC1	51
114PS472-1	77272	219A	118	114P1031-9	77272	273	11
114PS472-1	77272	219A	13	114P1033-1	77272	QC1	53
114PS472-1	77272	221A		114P1033-1	77272	217	6
114PS473-1	77272	219A	23	114P1033-1	77272	217A	8
114PS473-15	77272	219A	23	114P1033-1	77272	217B	11
114PS473-16	77272	219A	23	114P1036-1	77272	62	43
114PS473-17	77272	219A	128	114P1036-1	77272	QC1	147
114PS473-17	77272	219A	24	114P1042-1	77272	62	60F
114PS473-18	77272	219A	128	114P1042-1	77272	QC1	72
114PS473-18	77272	219A	24	114P1042-4	77272	62	60F
114PS473-19	77272	219A	129	114P2001-1	77272	62	59
114PS473-2	77272	219A	23	114P2001-1	77272	66	
114PS473-20	77272	219A	129	114P2005-1	77272	62	59
114PS473-21	77272	218		114P2005-1	77272	66	
114PS473-22	77272	218		114P2005-2	77272	62	59
114PS473-23	77272	218		114P2005-2	77272	66	
114PS473-24	77272	218		114P2014-1	77272	66	42
114PS473-3	77272	219A	128	114P2014-1	77272	QC1	45
114PS473-3	77272	219A	24	114P2015-7	77272	66	42
114PS473-4	77272	219A	128	114P2031-1	77272	66	32
114PS473-4	77272	219A	24	114P2031-1	77272	QC1	40
114PS473-5	77272	219A	129	114P2035-1	77272	66	5A
114PS473-6	77272	219A	129	114P2035-1	77272	QC1	34
114PS473-7	77272	218		114P2035-11	77272	66	5A
114PS473-8	77272	218		114P2035-13	77272	66	11
114P0001-1	77272	62		114P2035-2	77272	66	
114P0001-11	77272	62		114P2035-2	77272	QC1	35
114P0001-12	77272	62		114P2035-7	77272	66	5A
114P0001-13	77272	62		114P2036-6	77272	66	25
114P0001-7	77272	62	2	114P2036-6	77272	66	26
114P0001-7	77272	KITS		114P2036-6	77272	QC1	38
114P0001-9	77272	62		114P2041-1	77272	66	25
114P0002-2	77272	62		114P2041-2	77272	66	26
114P0002-4	77272	62		114P2049-1	77272	66	17
114P0004-2	77272	62		114P2049-2	77272	66	17
114P0004-3	77272	62		114P2049-3	77272	66	22
114P0101-1	77272	273		114P223-1	77272	62	19
114P0101-3	77272	273		114P223-1	77272	QC1	183
114P0101-6	77272	273	7	114P3001-1	77272	62	
114P0130-1	77272	273	4B	114P3001-2	77272	62	
114P0131-1	77272	273	6	114P3001-3	77272	62	
114P0134-1	77272	273	32	114P3031-1	77272	62	72
114P1001-1	77272	62		114P3031-1	77272	QC1	140
114P1001-7	77272	62		114P3031-1	77272	217	
114P1001-8	77272	62		114P3031-1	77272	217A	19
114P1001-9	77272	62		114P3031-1	77272	217B	20
114P1002-2	77272	62		114P4001-1	77272	213	
114P1002-4	77272	62		114P4001-11	77272	213	
114P1004-3	77272	62		114P4001-13	77272	213	
114P1004-7	77272	62		114P4001-13	77272	220	
114P1006-1	77272	62	60	114P4001-15	77272	213	
114P1006-1	77272	217		114P4001-16	77272	213	
114P1006-7	77272	62	60	114P4001-17	77272	213	
114P1006-7	77272	217		114P4001-17	77272	220	
114P1008-1	77272	62	60	114P4001-18	77272	213	
114P1008-1	77272	217A		114P4001-18	77272	220	
114P1009-1	77272	62	60	114P4001-3	77272	213	
114P1009-1	77272	217B		114P4001-7	77272	213	
114P1010-1	77272	62	71	114P4001-9	77272	213	

REFERENCE NUMBER	MFG CODE	FIG NUMBER	ITEM NUMBER
114P4001-9	77272	213	43
114P4001-9	77272	220	43
114P4001-9	77272	221	91
114P4009-1	77272	221	
114P4009-2	77272	221	
114P4009-3	77272	221	
114P4010-1	77272	213	35
114P4010-1	77272	215	
114P4010-1	77272	220	33
114P4010-1	77272	221	1
114P4015-1	77272	213	29
114P4015-1	77272	220	27
114P4015-1	77272	221	60
114P4020-1	77272	218	16
114P4020-1	77272	219	63
114P4020-1	77272	219	9
114P4021-1	77272	218	19
114P4021-1	77272	219	12
114P4021-1	77272	219	60
114P4027-1	77272	220	5
114P4027-1	77272	221	2
114P4028-1	77272	220	6
114P4028-1	77272	221	3
114P4029-1	77272	220	15
114P4029-1	77272	221	36
114P4030-1	77272	221	57
114P4038-1	77272	213	56
114P4038-1	77272	213	57
114P4038-11	77272	213	21
114P4038-15	77272	221	136
114P4038-167	77272	213	44
114P4038-167	77272	220	44
114P4038-168	77272	213	
114P4038-168	77272	213	45
114P4038-168	77272	220	45
114P4038-169	77272	213	46
114P4038-169	77272	220	46
114P4038-170	77272	213	47
114P4038-170	77272	220	47
114P4038-19	77272	213	27
114P4038-195	77272	221	136
114P4038-196	77272	221	137
114P4038-203	77272	220	25
114P4038-203	77272	221	53
114P4038-204	77272	220	2
114P4038-210	77272	213	57A
114P4038-210	77272	220	54
114P4038-214	77272	220	16
114P4038-214	77272	221	44
114P4038-218	77272	220	30
114P4038-229	77272	221	64
114P4038-230	77272	221	82
114P4038-231	77272	221	62
114P4038-232	77272	218	68
114P4038-233	77272	218	64
114P4038-234	77272	218	62
114P4038-235		218	73
114P4038-236	77272	219	30
114P4038-236	77272	219A	101
114P4038-237	77272	219	29
114P4038-237	77272	219A	103
114P4038-238	77272	219	77
114P4038-238	77272	219A	195
114P4038-239	77272	219	75
114P4038-239	77272	219A	193
114P4038-240	77272	218	69
114P4038-241	77272	218	73
114P4038-242	77272	221	118
114P4038-243	77272	221	124
114P4038-244	77272	221	112
114P4038-245	77272	221	122
114P4038-246	77272	221	20
114P4038-247	77272	221	16
114P4038-248	77272	218	73A
114P4038-249	77272	218	73B
114P4038-25	77272	213	41
114P4038-25	77272	220	41
114P4038-25	77272	221	9
114P4038-251	77272	220	8
114P4038-251	77272	221	29
114P4038-252	77272	220	9
114P4038-252	77272	221	71
114P4038-31	77272	211	26
114P4038-33	77272	213	19
114P4038-35	77272	213	36
114P4038-35	77272	220	32
114P4038-37	77272	213	34
114P4038-42	77272	213	11
114P4038-43	77272	213	1
114P4038-44	77272	213	2
114P4038-45	77272	213	12
114P4038-46	77272	213	61
114P4038-47	77272	213	62
114P4038-48	77272	213	16
114P4038-48	77272	220	13
114P4038-48	77272	221	27
114P4038-49	77272	213	33
114P4038-49	77272	220	14
114P4038-49	77272	221	74
114P4038-5	77272	213	59
114P4038-50	77272	213	14
114P4038-51	77272	213	32
114P4038-55	77272	213	39
114P4038-55	77272	220	36
114P4038-55	77272	221	12
114P4038-57	77272	213	37
114P4038-57	77272	220	34
114P4038-59	77272	213	23
114P4038-59	77272	220	19
114P4038-59	77272	221	46
114P4038-6	77272	213	60
114P4038-61	77272	213	25
114P4038-61	77272	220	22
114P4038-61	77272	221	50
114P4038-71	77272	213	61A
114P4038-71	77272	220	56
114P4038-72	77272	213	62A
114P4038-72	77272	220	57
114P4038-73	77272	220	1
114P4038-81	77272	221	77
114P4038-98	77272	220	9
114P4038-98	77272	221	71
114P4039-19	77272	221	5
114P4039-19	77272	273	9
114P4039-21	77272	QC1	74
114P4039-23	77272	211	11
114P4039-24	77272	213	51
114P4039-24	77272	220	
114P4039-3	77272	211	25
114P4039-5	77272	213	49
114P4039-5	77272	220	49
114P4039-7	77272	213	48
114P4039-7	77272	220	48
114P4040-1	77272	11A	105A
114P4045-19	77272	62	
114P4101-5	77272	13	
114P4101-5	77272	211	
114P4101-7	77272	13	
114P4101-7	77272	211	
114P4101-701	77272	211	
114P4101-9	77272	211	
114P4101-9	77272	218	

REFERENCE NUMBER	MFG CODE	FIG NUMBER	ITEM NUMBER
114P4101-9	77272	218	73C
114P4101-9	77272	219	
114P4105-10	77272	13	
114P4105-10	77272	218	
114P4105-11	77272	13	
114P4105-11	77272	218	
114P4105-12	77272	13	
114P4105-12	77272	218	
114P4105-13	77272	13	
114P4105-13	77272	218	
114P4105-14	77272	13	
114P4105-14	77272	218	
114P4105-7	77272	13	
114P4105-7	77272	218	
114P4105-8	77272	13	
114P4105-8	77272	218	
114P4105-9	77272	13	
114P4105-9	77272	218	
114P4106-10	77272	219A	
114P4106-7		13	
114P4106-7	77272	219	
114P4106-8	77272	13	
114P4106-8	77272	219	
114P4106-9	77272	219A	
114P4107-10	77272	13	
114P4107-10	77272	219	
114P4107-10	77272	219A	
114P4107-7	77272	13	
114P4107-7	77272	219	
114P4107-8	77272	13	
114P4107-8	77272	219	
114P4107-9	77272	13	
114P4107-9	77272	219	
114P4107-9	77272	219A	
114P4111-3	77272	211	21B
114P4111-3	77272	212	
114P4111-3	77272	218	33
114P4111-3	77272	219	25
114P4111-3	77272	219	71
114P4111-3	77272	219A	173
114P4111-3	77272	219A	68
114P4117-1	77272	211	14B
114P4117-2	77272	211	15
114P4118-1	77272	211	19A
114P4120-1	77272	219	1
114P4120-2	77272	219	1
114P4122-1	77272	218	
114P4122-1	77272	218	30
114P4122-1	77272	219	
114P4122-1	77272	219A	166
114P4122-1	77272	219A	61
114P4122-2	77272	218	
114P4122-2	77272	218	29
114P4122-2	77272	219	
114P4122-2	77272	219A	166
114P4122-2	77272	219A	61
114P4125-1	77272	218	12
114P4125-1	77272	218	7A
114P4125-1	77272	219	57
114P4125-1	77272	219	6
114P4126-2	77272	218	12
114P4126-2	77272	218	7A
114P4127-3	77272	219	52
114P4127-4	77272	219	52
114P4127-8	77272	219	1
114P4127-8	77272	219	52
114P4127-9	77272	219	1
114P4127-9	77272	219	52
114P4130-5	77272	211	8
114P4130-7	77272	211	8
114P4131-5	77272	211	3
114P4131-7	77272	211	3
114P4132-1	77272	13	40D
114P4132-1	77272	18	
114P4133-1	77272	211	22
114P4134-3	77272	211	28
114P4134-705	77272	211	27
114P4134-706	77272	211	27
114P4135-1	77272	62	63
114P4135-1	77272	QC1	75
114P4135-1	77272	217	
114P4135-1	77272	217A	24
114P4135-1	77272	217B	25
114P4253-1	77272	218	
114P4253-1	77272	219	
114P4253-2	77272	218	
114P4253-2	77272	219	
114P4254-1	77272	219	59A
114P4254-1	77272	219	9A
114P4255-1	77272	218	
114P4255-1	77272	218	30
114P4255-1	77272	219	22
114P4255-1	77272	219	67
114P4255-2	77272	218	
114P4255-2	77272	218	29
114P4255-2	77272	219	22
114P4255-2	77272	219	67
114P4255-6	77272	219A	167
114P4255-6	77272	219A	62
114P4255-7	77272	219A	167
114P4255-7	77272	219A	62
114P4256-1	77272	218	25
114P4256-1	77272	218	26
114P4256-10	77272	218	25
114P4256-10	77272	218	26
114P4256-11	77272	219A	
114P4256-12	77272	219A	
114P4256-13	77272	218	25
114P4256-13	77272	218	26
114P4256-14	77272	218	25
114P4256-2	77272	218	25
114P4256-2	77272	218	26
114P4256-5	77272	218	25
114P4256-5	77272	218	26
114P4256-6	77272	218	25
114P4256-6	77272	218	26
114P4256-7	77272	219A	
114P4256-8	77272	219A	
114P4256-9	77272	218	25
114P4256-9	77272	218	26
114P4257-1	77272	218	
114P4258-1	77272	218	76
114P4259-1	77272	221	103
114P4260-1	77272	218	74B
114P4260-2	77272	218	74B
114P4262-1	77272	221	117
114P4262-2	77272	221	123
114P4264-1	77272	218	3
114P4266-1	77272	218	74B
114P4266-2	77272	218	74B
114P4269-1	77272	219A	25
114P4269-10	77272	218	8
114P4269-2	77272	219A	25
114P4269-23	77272	219A	136
114P4269-23	77272	219A	34
114P4269-24	77272	218	8E
114P4269-24	77272	219A	32
114P4269-25	77272	218	12D
114P4269-25	77272	218	8C
114P4269-25	77272	219A	134
114P4269-25	77272	219A	36
114P4269-26	77272	218	

REFERENCE NUMBER	MFG CODE	FIG NUMBER	ITEM NUMBER
114P4269-3	77272	219A	130
114P4269-3	77272	219A	25
114P4269-4	77272	219A	130
114P4269-4	77272	219A	25
114P4269-5	77272	219A	131
114P4269-6	77272	219A	131
114P4269-7	77272	218	12A
114P4269-88	77272	218	12A
114P4269-9	77272	218	8
114P4274-1	77272	221	
114P4274-2	77272	221	
114P4274-3	77272	221	
114P4274-4	77272	221	
114P4276-10	77272	217B	
114P4276-103	77272	221	137
114P4276-11	77272	217B	
114P4276-119	77272	213	44
114P4276-121	77272	213	
114P4276-121	77272	213	45
114P4276-13	77272	217	24
114P4276-13	77272	217B	
114P4276-14	77272	217B	
114P4276-15	77272	217B	
114P4276-9	77272	217B	
114P462-4	77272	218	20
114P5001-1	77272	62	1
114P5001-1	77272	249	
114P5002-1	77272	62	1
114P5002-1	77272	249	
114P5003-105	77272	249	2
114P5003-106	77272	249	14
114P5003-111	77272	249	3
114P5003-112	77272	249	4
114P5003-84	77272	249	14
114P5003-85	77272	QC1	3
114P5003-85	77272	249	2
114P5003-91	77272	249	13A
114P5003-93	77272	249	3
114P5003-94	77272	249	4
114P5004-1	77272	QC1	11
114P5004-19	77272	62	
114P5004-23	77272	62	
114P5004-25	77272	62	
114P5004-27	77272	62	40
114P5004-29	77272	62	36
114P5004-29	77272	QC1	11
114P5004-3	77272	62	39
114P5004-30	77272	62	36
114P5004-31	77272	62	39
114P5004-35	77272	62	
114P5004-36	77272	62	
114P5004-37	77272	62	40
114P5004-41	77272	62	
114P5032-1	77272	QC1	9
114P5032-1	77272	249	16
114P5101-7	77272	62	42
114P5101-7	77272	QC1	13
114P5102-1	77272	62	42
114P5234-16	77272	QC1	5
114P5234-16	77272	249	19
114P7010-19	77272	118	99A
114P7010-21	77272	62	83
114P7010-21	77272	118	
114P7010-22	77272	QC1	187
114P7010-22	77272	118	100
114P7012-1	77272	62	85
114P7012-1	77272	QC1	187
114P7012-1	77272	118	100
114P7012-2	77272	62	
114P7012-2	77272	118	99A
114P7012-4	77272	62	
114P7012-4	77272	118	99A
114P7012-5	77272	62	85
114P7012-6	77272	118	99A
114P7012-8	77272	62	
114P7012-8	77272	118	99A
114P7012-9	77272	62	85
114P7013-1	77272	118	86
114P7030-1	77272	118	101
114P7030-3	77272	118	102
114P7031-1	77272	62	21
114P7031-2	77272	62	
114P7031-3	77272	62	21
114P7031-3	77272	QC1	185
114P7032-1	77272	62	19
114P7032-3	77272	62	
114P7032-6	77272	62	
114P7032-7	77272	62	19
114P7050-2	77272	118	101
114P7051-1	77272	118	97A
114P8001-18	77272	33	
114P8001-18	77272	62	8
114P8001-18	77272	QC1	1A
114P8001-19	77272	33	
114P8002-1	77272	33	
114P8002-1	77272	62	8
114P8002-2	77272	33	
114P8002-2	77272	62	8
114P8002-3	77272	33	
114P8002-3	77272	62	8
114P8002-4	77272	33	
114P8002-4	77272	62	8
114P8002-5	77272	33	
114P8002-5	77272	62	8
114P8011-5	77272	33	11
114P8011-6	77272	33	12
114P8012-1	77272	33	21
114P8012-2	77272	33	22
114P8013-10	77272	33	14
114P8013-9	77272	33	13
114P8014-10	77272	33	24
114P8014-9	77272	33	25
114P8015-1	77272	62	7A
114P8015-2	77272	62	7A
114P8030-103	77272	33	34
114P8030-11	77272	33	31
114P8030-124	77272	33	20
114P8030-130	77272	33	20
114P8030-61	77272	33	33
114P8030-9	77272	33	27
114P8030-91	77272	33	28
114P8031-107	77272	33	4A
114P8031-108	77272	33	4B
114P8031-61	77272	33	18
114P8032-100	77272	33	
114P8032-100	77272	118	44
114P8032-109	77272	33	54
114P8032-110	77272	33	54
114P8032-39	77272	33	54B
114P8032-45	77272	33	53
114P8032-69	77272	33	55
114P8032-99	77272	33	
114P8032-99	77272	118	44
114P8034-18	77272	62	52
114P8034-18	77272	QC1	151
114P8036-3	77272	33	
114P8036-4	77272	33	
114P8038-1	77272	33	
114P8038-1	77272	33	46
114P8038-2	77272	33	
114P8038-2	77272	33	46
114P8039-2	77272	33	29

REFERENCE NUMBER	MFG CODE	FIG NUMBER	ITEM NUMBER
114P8041-1	77272	33	45
114P8042-1	77272	33	
114P8042-3	77272	33	42
114P8042-7	77272	33	
114P8043-1	77272	33	36
114P8044-1	77272	33	
114P8044-2	77272	33	
114P8045-13	77272	62	48
114P8045-14	77272	62	48
114P8045-15	77272	62	47
114P8045-17	77272	62	
114P8046-13	77272	11B	80
114P8046-16	77272	11B	82
114P8047-3	72722	11B	
114P8047-5	77272	11B	
114P8047-6	77272	11B	
114P8047-7	77272	11B	
114P8047-8	77272	11B	
114P8048-3	77272	QC1	149
114P8048-4	77272	QC1	149
114P8049-1	77272	33	44D
114P8049-2	77272	33	44D
114P8049-3	77272	33	
114P8050-1	77272	62	28
114P8050-1	77272	QC1	17
114P8050-2	77272	62	28
114P8050-2	77272	QC1	17
114P8051-1	77272	62	14
114P8051-1	77272	QC1	20
114P8053-1	77272	11B	80
114P8053-2	77272	11B	81
114P8054-1	77272	11B	
114P8054-2	77272	11B	
114P8057-1	77272	33	20
114P8057-48	77272	33	20
114P8057-61	77272	33	20
114P8058-1	77272	33	4A
114P8058-13	77272	33	4A
114P8058-14	77272	33	
114P8058-15	77272	33	
114P8058-2	77272	33	4B
114P8059-1	77272	33	13
114P8059-2	77272	33	14
114P8063-1	77272	62	7B
114P8064-18	77272	62	7I
114RK112-1	77272	70	
114RK605-1	77272	71	
114RK605-2	77272	71	
114RK605-2	77272	KITS	
114RK605-3	77272	71	
114RK605-3	77272	KITS	
114RS100-1	77272	69	4
114RS100-2	77272	69	4
114RS100-2	77272	70	19
114RS101-3	77272	69	2
114RS101-3	77272	70	16
114RS101-4	77272	69	2
114RS202-1	77272	72	12
114RS209-1	77272	69	9B
114RS209-2	77272	69	10
114RS209-3	77272	69	11
114RS210-1	77272	71	36
114RS210-2	77272	71	35
114RS211-1	77272	71	109
114RS211-2	77272	71	108
114RS212-1		KITS	
114RS212-1	77272	71	33A
114RS213-1	77272	71	109
114RS213-2	77272	71	108
114RS213-3	77272	71	109
114RS213-4	77272	71	108
114RS214-1	77272	71	36
114RS214-2	77272	71	35
114RS214-3	77272	71	36
114RS214-4	77272	71	35
114RS214-5	77272	71	36
114RS214-6	77272	71	35
114RS215-1	77272	71	77
114RS215-1	77272	KITS	
114RS215-2	77272	71	77A
114RS215-2	77272	KITS	
114RS216-2	77272	69	
114RS216-3	77272	69	
114RS216-3	77272	70	16
114RS216-4	77272	69	2A
114RS216-4	77272	70	16A
114RS216-5	77272	69	2A
114RS221-3	77272	72	18
114RS221-3	77272	72	49
114RS221-3	77272	73	12
114RS223-1	77272	72	22
114RS223-1	77272	72	53
114RS223-1	77272	73	21
114RS224-1	77272	72	22
114RS224-1	77272	72	53
114RS224-1	77272	73	21
114RS306-2	77272	75	130
114RS306-4	77272	75	130
114RS306-6	77272	75	130
114RS306-6	77272	75	174
114RS306-7	77272	75	126
114RS307-2	77272	75	134
114RS307-2	77272	75	175
114RS307-3	77272	75	134
114RS307-3	77272	75	175
114RS308-1	77272	75	134
114RS308-1	77272	75	175
114RS311-1	77272	75	112
114RS312-1	77272	75	113
114RS313-1	77272	75	106
114RS315-1	77272	75	60
114RS315-2	77272	75	51
114RS315-3	77272	75	60
114RS315-4	77272	75	51
114RS317-3	77272	75	37
114RS317-5	77272	75	38
114RS318-2	77272	75	24A
114RS318-2	77272	75	41
114RS352-1	77272	75	66A
114RS352-1	77272	KITS	
114RS352-2	77272	75	67A
114R0001	77272	72	
114R0002	77272	72	
114R1002-101	77272	69	
114R1002-102	77272	69	
114R1002-107	77272	69	
114R1002-111	77272	69	
114R1002-113	77272	69	
114R1002-115	77272	69	
114R1002-120	77272	69	
114R1002-122	77272	69	
114R1002-128	77272	69	
114R1002-130	77272	69	
114R1002-132	77272	69	
114R1002-27	77272	69	
114R1002-28	77272	69	
114R1002-29	77272	69	
114R1002-30	77272	69	
114R1002-33	77272	69	
114R1002-34	77272	69	
114R1002-35	77272	69	
114R1002-36	77272	69	

REFERENCE NUMBER	MFG CODE	FIG NUMBER	ITEM NUMBER
114R1002-37	77272	69	
114R1002-38	77272	69	
114R1002-41	77272	69	
114R1002-42	77272	69	
114R1002-43	77272	69	
114R1002-44	77272	69	
114R1002-47	77272	69	
114R1002-48	77272	69	
114R1002-49	77272	69	
114R1002-50	77272	69	
114R1002-51	77272	69	
114R1002-52	77272	69	
114R1002-57	77272	69	
114R1002-58	77272	69	
114R1002-61	77272	69	
114R1002-62	77272	69	
114R1002-63	77272	69	
114R1002-64	77272	69	
114R1002-65	77272	69	
114R1002-66	77272	69	
114R1002-69	77272	69	
114R1002-70	77282	69	
114R1002-73	77272	69	
114R1002-74	77272	69	
114R1002-75	77272	69	
114R1002-76	77272	69	
114R1002-77	77272	69	
114R1002-78	77272	69	
114R1002-80	77272	69	
114R1002-82	77272	69	
114R1002-88	77272	69	
114R1002-90	77272	69	
114R1002-92	77272	69	
114R1003-10	77272	69	
114R1003-9	77272	69	
114R1004-2	77272	69	45
114R1005-1	77272	69	44
114R1005-3	77272	69	44
114R1006-3	77272	69	43
114R1007-2	77272	69	
114R1007-3	77272	69	
114R1007-4	77272	69	44
114R1008-2	77272	69	43
114R1008-3	77272	69	
114R1008-4	77272	69	
114R1008-5	77272	69	
114R1010-11	77272	69	49
114R1010-12	77272	69	49
114R1010-13	77272	69	49
114R1010-14	77272	69	49
114R1010-15	77272	69	49
114R1010-16	77272	69	49
114R1010-17	77272	69	49
114R1010-18	77272	69	49
114R1010-19	77272	69	49
114R1010-20	77272	69	49
114R1010-21	77272	69	49
114R1010-22	77272	69	49
114R1010-23	77272	69	49
114R1010-24	77272	69	49
114R1010-512	77272	69	49
114R1010-513	77272	69	49
114R1010-514	77272	69	49
114R1010-515	77272	69	49
114R1010-516	77272	69	49
114R1010-517	77272	69	49
114R1010-518	77272	69	49
114R1010-519	77272	69	49
114R1010-520	77272	69	49
114R1010-521	77272	69	49
114R1010-522	77272	69	49
114R1010-523	77272	69	49
114R1012-10	77272	69	42
114R1012-11	77272	69	42
114R1012-12	77272	69	42
114R1012-14	77272	69	42
114R1012-6	77272	69	42
114R1012-7	77272	69	42
114R1012-8	77272	69	42
114R1012-9	77272	69	42
114R1043-12	77272	69	9A
114R1043-2	77272	69	9
114R1043-4	77272	69	9
114R1043-8	77272	69	9A
114R1043-9	77272	69	9
114R1048-3	77272	69	
114R1049-1	77272	69	
114R1050-1	77272	69	
114R1050-5	77272	69	
114R1051-1	77272	69	
114R1052-1	77272	69	
114R1059-1	77272	69	
114R1060-3	77272	69	46
114R1060-5	77272	69	46
114R1060-6	77272	69	46
114R1060-7	77272	69	46
114R1065-4	77272	69	36
114R1066-10	77272	69	
114R1066-3	77272	69	
114R1066-4	77272	69	
114R1066-7	77272	69	40
114R1066-8	77272	69	40
114R1066-9	77272	69	
114R1067-21	77272	69	
114R1067-22	77272	69	
114R1067-23	77272	69	
114R1067-24	77272	69	
114R1067-25	77272	69	
114R1067-26	77272	69	
114R1067-27	77272	69	
114R1067-28	77272	69	
114R1067-29	77272	69	
114R1067-30	77272	69	
114R1067-31	77272	69	
114R1067-32	77272	69	
114R1067-34	77272	69	
114R1067-35	77272	69	
114R1068-1	77272	69	
114R1069-7	77272	69	17A
114R1069-8	77272	69	17B
114R1070-1	77272	69	
114R1071-3	77272	69	
114R1075-1	77272	69	
114R1075-10	77272	69	
114R1075-12	77272	69	
114R1075-13	77272	69	
114R1075-14	77272	69	
114R1075-15	77272	69	
114R1075-3	77272	69	
114R1075-39	77272	69	
114R1075-40	77272	69	
114R1075-41	77272	69	
114R1075-5	77272	69	
114R1075-6	77272	69	
114R1075-7	77272	69	
114R1075-8	77272	69	
114R1075-9	77272	69	
114R1076-1	77272	69	
114R1077-7	77272	69	48
114R1087-1	77272	69	21
114R1091-5	77272	69	35
114R1106-1	77272	69	20

REFERENCE NUMBER	MFG CODE	FIG NUMBER	ITEM NUMBER
114R1214-1	77272	69	47B
114R1214-1	77272	70	33
114R1215-1	77272	69	38
114R1215-10	77272	69	
114R1215-3	77272	69	39
114R1215-6	77272	69	37
114R1215-9	77272	69	
114R1290-2	77272	69	47A
114R1290-2	77272	70	
114R1290-3	77272	69	47
114R1290-3	77272	70	
114R1325-2	77272	69	
114R1363-1	77272	69	41
114R1371-1	77272	69	
114R1372-10	77272	69	17
114R1372-11	77272	69	
114R1372-12	77272	69	
114R1372-17	77272	69	17
114R1372-18	77272	69	17
114R1372-3	77272	69	
114R1372-4	77272	69	
114R1372-7	77272	69	
114R1372-8	77272	69	
114R1373-1	77272	69	19
114R1373-1	77272	70	11
114R1374-1	77272	69	
114R1374-11	77272	69	34
114R1374-11	77272	BULK	
114R1374-18	77272	69	26
114R1374-23	77272	69	26
114R1374-3	77272	69	28
114R1374-5	77272	69	32
114R1374-7	77272	69	
114R1375-15	77272	69	29
114R1375-16	77272	69	30
114R1375-3	77272	69	14
114R1375-4	77272	69	13
114R145-1	77272	69	51
114R1502-1	77272	70	
114R1502-10	77272	70	
114R1502-13	77272	70	
114R1502-14	77272	70	
114R1502-15	77272	70	
114R1502-16	77272	70	
114R1502-17	77272	70	
114R1502-18	77272	70	
114R1502-2	77272	70	
114R1502-23	77272	70	
114R1502-24	77272	70	
114R1502-25	77272	70	
114R1502-26	77272	70	
114R1502-27	77272	70	
114R1502-28	77272	70	
114R1502-29	77272	70	
114R1502-30	77272	70	
114R1502-31	77272	70	
114R1502-32	77272	70	
114R1502-33	77272	70	
114R1502-34	77272	70	
114R1502-37	77272	70	
114R1502-38	77272	70	
114R1502-39	77272	70	
114R1502-40	77272	70	
114R1502-41	77272	70	
114R1502-42	77272	70	
114R1502-43	77272	70	
114R1502-44	77272	70	
114R1502-47	77272	70	
114R1502-48	77272	70	
114R1502-49	77272	70	
114R1502-50	77272	70	
114R1502-7	77272	70	
114R1502-8	77272	70	
114R1502-9	77272	70	
114R1503-1	77272	70	
114R1503-11	77272	70	
114R1503-12	77272	70	
114R1503-13	77272	70	
114R1503-14	77272	70	
114R1503-15	77272	70	
114R1503-16	77272	70	
114R1503-17	77272	70	
114R1503-18	77272	70	
114R1503-19	77272	70	
114R1503-2	77272	70	
114R1503-20	77272	70	
114R1503-5	77272	70	
114R1503-6	77272	70	
114R1504-10	77272	70	37
114R1504-13	77272	70	37
114R1504-14	77272	70	37
114R1504-9	77272	70	37
114R1505-17	77272	70	36
114R1505-18	77272	70	36
114R1505-19	77272	70	36
114R1505-20	77272	70	36
114R1505-21	77272	70	36
114R1505-22	77272	70	36
114R1505-31	77272	70	36
114R1505-32	77272	70	36
114R1505-33	77272	70	36
114R1505-34	77272	70	36
114R1505-35	77272	70	36
114R1505-36	77272	70	36
114R1505-37	77272	70	36
114R1505-38	77272	70	36
114R1505-5	77272	70	36
114R1505-6	77272	70	36
114R1506-16	77272	70	35
114R1506-17	77272	70	35
114R1506-18	77272	70	35
114R1506-19	77272	70	35
114R1506-20	77272	70	35
114R1506-21	77272	70	35
114R1506-26	77272	70	35
114R1506-27	77272	70	35
114R1506-28	77272	70	35
114R1506-29	77272	70	35
114R1506-6	77272	70	35
114R1506-7	77272	70	35
114R1510-10	77272	70	37A
114R1510-13	77272	70	
114R1510-14	77272	70	
114R1510-15	77272	70	37A
114R1510-16	77272	70	37A
114R1510-19	77272	70	37A
114R1510-20	77272	70	37A
114R1510-21	77272	70	37A
114R1510-22	77272	70	37A
114R1510-4	77272	70	
114R1510-7	77272	70	40
114R1510-9	77272	70	37A
114R1512-10	77272	70	30
114R1512-11	77272	70	30
114R1512-12	77272	70	30
114R1512-13	77272	70	30
114R1512-14	77272	70	30
114R1512-15	77272	70	30
114R1512-16	77272	70	30
114R1512-17	77272	70	30
114R1512-18	77272	70	30
114R1515-1	77272	70	26

REFERENCE NUMBER	MFG CODE	FIG NUMBER	ITEM NUMBER	REFERENCE NUMBER	MFG CODE	FIG NUMBER	ITEM NUMBER
114R1516-1	77272	70	6	114R2001-9	77272	71	
114R1516-2	77272	70	7	114R2002-2	77272	71	
114R1517-1	77272	70	8	114R2002-3	77272	71	
114R1517-2	77272	70	9	114R2002-4	77272	71	
114R1518-1	77272	70	30	114R2002-5	77272	71	
114R1518-2	77272	70	30	114R2002-6	77272	71	
114R1518-3	77272	70	30	114R2003-1	77272	71	
114R1520-1	77272	70		114R2003-2	77272	71	
114R1521-3	77272	70	34	114R2003-3	77272	71	
114R1522-3	77272	70	28	114R2004-2	77272	71	
114R1524-1	77272	70	31	114R2004-3	77272	71	
114R1524-2	77272	70	32	114R2004-4	77272	71	
114R1526-1	77272	70		114R2012-1	77272	71	
114R1526-2	77272	70		114R2012-2	77272	71	
114R1543-3	77272	70	24	114R2012-3	77272	71	
114R1543-4	77272	70	24	114R2050-16	77272	71	112
114R1560-1	77272	70		114R2050-17	77272	71	112
114R1560-10	77272	70		114R2050-18	77272	71	112
114R1560-2	77272	70		114R2050-21	77272	71	112
114R1560-3	77272	70		114R2050-22	77272	71	112
114R1560-4	77272	70		114R2050-7	77272	71	112
114R1560-5	77272	70		114R2050-9	77272	71	112
114R1560-6	77272	70		114R2051-1	77272	71	6
114R1560-7	77272	70		114R2052-1	77272	71	5
114R1560-8	77272	70		114R2053-1	77272	71	13
114R1560-9	77272	70		114R2053-6	77272	71	13
114R1561-1	77272	70		114R2054-1	77272	71	3
114R1563-1	77272	70		114R2058-1	77272	71	12A
114R1564-3	77272	70	29	114R2059-1	77272	71	2A
114R1564-4	77272	70	29	114R2060-1	77272	71	144
114R1565-5	77272	70	41	114R2061-1	77272	71	66
114R1565-6	77272	70	14	114R2061-2	77272	71	66
114R1566-5	77272	70	42	114R2062-1	77272	71	65
114R1570-1	77272	70		114R2062-2	77272	71	65
114R1570-2	77272	70		114R2063-7	77272	71	91A
114R1572-17	77272	70	5	114R2064-1	77272	71	47
114R1572-18	77272	70	5	114R2064-2	77272	71	45
114R1573-2	77272	69	12	114R2064-3	77272	71	46
114R1573-2	77272	70	24A	114R2065-1	77272	71	132
114R1573-3	77272	69	48	114R2065-2	77272	71	135
114R1573-3	77272	70		114R2065-5	77272	71	132
114R1573-4	77272	70		114R2066-13	77272	71	72
114R1574-1	77272	69	3	114R2066-14	77272	71	72
114R1574-1	77272	70	17	114R2066-5	77272	71	72
114R1576-1	77272	69	40A	114R2066-6	77272	71	72
114R1576-1	77272	70	44	114R2066-7	77272	71	72
114R1577-11	77272	70	27	114R2067-1	77272	71	
114R1577-12	77272	70	27	114R2067-19	77272	71	
114R1578-1	77272	69	1	114R2067-2	77272	71	
114R1578-1	77272	70	15	114R2067-20	77272	71	
114R1586-1	77272	70	12	114R2067-21	77272	71	
114R1587-1	77272	70	13	114R2067-22	77272	71	
114R1587-2	77272	70	13	114R2067-3	77272	71	
114R1591-13	77272	70		114R2067-4	77272	71	
114R1591-14	77272	70		114R2067-5	77272	71	
114R1591-5	77272	70		114R2067-6	77272	71	
114R1592-1	77272	70		114R2068-1	77272	71	59
114R2001-10	77272	71		114R2068-2	77272	71	59
114R2001-11	77272	71		114R2069-2	77272	71	58
114R2001-12	77272	71		114R2069-4	77272	71	58
114R2001-13	77272	71		114R2070-1	77272	71	137
114R2001-14	77272	71		114R2070-2	77272	71	137
114R2001-17	77272	71		114R2071-1	77272	71	67
114R2001-19	77272	71		114R2071-2	77272	71	67
114R2001-2	77272	71		114R2072-1	77272	71	73
114R2001-21	77272	71		114R2073-3	77272	71	41A
114R2001-25	77272	71		114R2073-4	77272	71	42
114R2001-5	77272	71		114R2075-1	77272	71	
114R2001-6	77272	71		114R2075-10	77272	71	66A
114R2001-7	77272	71		114R2075-11	77272	71	
114R2001-8	77272	71		114R2075-12	77272	71	

REFERENCE NUMBER	MFG CODE	FIG NUMBER	ITEM NUMBER
114R2075-13	77272	71	72A
114R2075-14	77272	71	72A
114R2075-15	77272	71	
114R2075-16	77272	71	
114R2075-2	77272	71	
114R2075-5	77272	71	65A
114R2075-8	77272	71	68A
114R2075-9	77272	71	69A
114R2076-1	77272	71	60
114R2076-1	77272	71	60A
114R2076-2	77272	71	60
114R2077-1	77272	71	143
114R2078-1	77272	71	141
114R2078-2	77272	71	141
114R2079-1	77272	71	123
114R2080-2	77272	71	124
114R2080-3	77272	71	124
114R2081-2	77272	71	116
114R2081-3	77272	71	116A
114R2082-1	77272	71	133
114R2083-1	77272	71	130
114R2087-2	77272	71	91A
114R2088-14	77272	71	111
114R2088-7	77272	71	111
114R2089-1	77272	71	112A
114R2090-1	77272	71	34
114R2091-1	77272	71	21C
114R2092-1	77272	71	26A
114R2093-1	77272	71	27A
114R2094-1	77272	71	21E
114R2095-2	77272	71	73B
114R2096-1	77272	72	67
114R2096-1	77272	KITS	
114R2096-2	77272	72	103
114R2096-2	77272	KITS	
114R2097-1	77272	72	44
114R2097-1	77272	KITS	
114R2098-1	77272	72	43
114R2098-1	77272	KITS	
114R2098-2	77272	72	75
114R2098-2	77272	KITS	
114R2099-1	77272	71	135A
114R2099-2	77272	71	135B
114R2100-8	77272	72	
114R2104-1	77272	72	21A
114R2104-1	77272	72	52A
114R2104-1	77272	73	25
114R2106-2	77272	72	16
114R2107-1	77272	72	9
114R2107-1	77272	KITS	
114R2108-1	77272	72	15
114R2109-1	77272	71	71
114R2109-2	77272	71	71
114R2110-1	77272	71	70
114R2111-3	77272	72	11
114R2112-1	77272	71	68
114R2112-2	77272	71	68
114R2113-1	77272	71	69
114R2114-1	77272	72	13
114R2115-1	77272	72	14
114R2128-11	77272	71	36
114R2128-112	77272	71	36
114R2129-11	77272	71	35
114R2129-112	77272	71	35
114R2130-2	77272	71	76
114R2131-1	77272	71	75
114R2132-1	77272	71	109
114R2133-1	77272	71	108
114R2139-1	77272	71	110
114R2139-2		KITS	
114R2139-2	77272	71	110
114R2139-2	77272	KITS	
114R2142-1	77272	71	74
114R2142-2	77272	71	74
114R2142-3	77272	71	74
114R2142-3	77272	KITS	
114R2143-2	77272	71	33
114R2143-2	77272	KITS	
114R2155-1	77272	71	78
114R2161-1	77272	71	61
114R2161-1	77272	71	61A
114R2161-2	77272	71	61
114R2162-1	77272	71	49A
114R2163-3	77272	71	49
114R2164-1	77272	71	52A
114R2165-1	77272	71	82
114R2165-2	77272	71	82
114R2166-1	77272	71	50
114R2166-3	77272	71	80A
114R2167-1	77272	71	53
114R2168-1	77272	71	51
114R2168-2	77272	71	81
114R2170-1	77272	71	111B
114R2171-1	77272	75	17
114R2172-1	77272	71	20
114R2173-1	77272	71	20
114R2176-1	77272	71	27
114R2177-1	77272	71	26
114R2178-1	77272	71	34
114R2179-1	77272	71	87
114R2187-1	77272	71	62
114R2187-2	77272	71	63
114R2187-3	77272	71	62
114R2187-4	77272	71	63
114R2188-1	77272	71	32
114R2190-1	77272	71	39
114R2191-1	77272	71	38
114R2196-1	77272	71	104
114R2196-2	77272	71	104
114R2197-1	77272	71	104
114R2197-3	77272	71	104B
114R2197-4	77272	71	104A
114R2199-1	77272	71	101
114R2200-1	77272	71	102
114R2201-1	77272	71	105
114R2202-1	77272	71	106
114R2203-1	77272	71	97
114R2204-1	77272	71	98
114R2205-1	77272	71	96
114R2206-1	77272	71	99
114R2250-1	77272	71	92
114R2250-2	77272	71	95
114R2251-1	77272	71	42A
114R2252-1	77272	71	21
114R3006-10	77272	75	20A
114R3006-11	77272	75	32B
114R3006-12	77272	75	32B
114R3006-5	77272	75	20A
114R3006-6	77272	75	20A
114R3006-7	77272	75	20A
114R3006-8	77272	75	20A
114R3006-9	77272	75	20A
114R3052-7	77272	81	17
114R3053-1	77272	91	8A
114R3053-4	77272	91	8A
114R3101-1	77272	75	75
114R3104-3	77272	75	114
114R3105-1	77272	75	73
114R3108-1	77272	75	35
114R3110-2	77272	75	28
114R3111-1	77272	75	27
114R3111-2	77272	75	31

REFERENCE NUMBER	MFG CODE	FIG NUMBER	ITEM NUMBER
114R3116-10	77272	75	137
114R3116-11	77272	75	140
114R3116-14	77272	75	77
114R3116-15	77272	75	142
114R3116-18	77272	75	141
114R3116-20	77272	75	139
114R3116-21	77272	75	59
114R3116-22	77272	75	72
114R3116-23	77272	75	49
114R3116-23	77272	75	49A
114R3116-24	77272	75	57
114R3116-24	77272	75	57A
114R3116-25	77272	75	78
114R3116-27	77272	75	69
114R3116-28	77272	75	76
114R3116-29	77272	75	138
114R3116-30	77272	75	153
114R3116-30	77272	75	178
114R3116-31	77272	75	154
114R3116-31	77272	75	179
114R3116-32	77272	75	156
114R3116-32	77272	75	181
114R3116-33	77272	75	155
114R3116-33	77272	75	180
114R3116-33	77272	75	190
114R3116-34	77272	75	80
114R3116-35	77272	75	81
114R3116-36	77272	75	59
114R3116-37	77272	75	72
114R3116-38	77272	75	70
114R3116-39	77272	75	171
114R3116-40	77272	75	43
114R3116-43	77272	71	67A
114R3116-44	77272	75	170
114R3116-45	77272	75	72
114R3116-46	77272	75	59
114R3116-47	77272	75	57
114R3116-47	77272	75	57A
114R3116-48	77272	75	49
114R3116-48	77272	75	49A
114R3116-49	77272	75	82
114R3116-5	77272	75	123
114R3116-50	77272	75	188
114R3116-51	77272	75	189
114R3116-52	77272	75	191
114R3116-53	77272	75	80
114R3116-6	77272	75	124
114R3116-6	77272	75	172
114R3116-7	77272	75	125
114R3116-8	77272	75	43
114R3118-1	77272	75	42
114R3119-3	77272	75	105
114R3120-10	77272	75	91
114R3121-1	77272	75	92
114R3121-2	77272	75	136
114R3121-2	77272	75	152
114R3121-2	77272	75	177
114R3121-2	77272	75	187
114R3122-1	77272	75	107
114R3123-1	77272	75	108
114R3125-3	77272	75	23
114R3126-4	77272	75	99
114R3127-1	77272	75	11
114R3128-1	77272	71	145
114R3129-1	77272	75	98
114R3130-1	77272	75	30
114R3131-5	77272	81	16C
114R3131-6	77272	91	
114R3131-7	77272	81	16B
114R3131-8	77272	91	6A
114R3132-1	77272	75	33
114R3133-1	77272	75	32
114R3133-2	77272	75	32
114R3134-1	77272	75	32
114R3302-1	77272	75	
114R3302-10	77272	75	
114R3302-11	77272	75	
114R3302-12	77272	75	
114R3302-2	77272	75	
114R3302-3		75	
114R3302-4	77272	75	
114R3302-510	77272	75	
114R3302-7		75	
114R3302-8	77272	75	
114R3302-9		75	
114R3303-1	77272	75	
114R3303-10	77272	75	
114R3303-2	77272	75	
114R3303-3		75	
114R3303-4		75	
114R3303-5		75	
114R3303-6		75	
114R3303-7	77272	75	
114R3303-8	77272	75	
114R3303-9	77272	75	
114R3304-15	77272	75	
114R3304-16	77272	75	
114R3304-17	77272	75	
114R3304-18	77272	75	
114R3304-19	77272	75	
114R3304-20	77272	75	
114R3304-22	77272	75	
114R3304-24	77272	75	
114R3304-25	77272	75	
114R3304-27	77272	75	
114R3304-5	77272	75	
114R3304-506	77272	75	
114R3304-507	77272	75	
114R3304-508	77272	75	
114R3304-510	77272	75	
114R3304-512	77272	75	
114R3304-6	77272	75	
114R3305-10	77272	75	
114R3305-11	77272	75	
114R3305-12	77272	75	
114R3305-13	77272	75	
114R3305-14	77272	75	
114R3305-16	77272	75	
114R3305-18	77272	75	
114R3305-20	77272	75	
114R3305-22	77272	75	
114R3305-23	77272	75	
114R3305-25	77272	75	
114R3305-27	77272	75	
114R3305-29	77272	75	
114R3305-5	77272	75	
114R3305-6	77272	75	
114R3305-7	77272	75	
114R3305-8	77272	75	
114R3305-9	77272	75	
114R3324-1	77272	75	132
114R3349-1	77272	75	149
114R3349-1	77272	75	160
114R3349-1	77272	75	184
114R3349-1	77272	75	192
114R3349-2	77272	75	150
114R3349-2	77272	75	161
114R3349-2	77272	75	185
114R3349-2	77272	75	193
114R3350-1	77272	75	135
114R3350-15	77272	75	135
114R3350-16	77272	75	135

REFERENCE NUMBER	MFG CODE	FIG NUMBER	ITEM NUMBER
114R3350-2	77272	75	135
114R3350-7	77272	75	135
114R3350-8	77272	75	135
114R3351-1	77272	75	151
114R3351-7	77272	75	176
114R3352-1	77272	75	186
114R3364-1	77272	75	122
114R3364-2	77272	75	122
114R3388-5	77272	75	50
114R3389-4	77272	75	121
114R3389-5	77272	75	121
114R3389-6	77272	75	121
114R3402-1	77272	75	127
114R3406-1	77272	75	75
114R3411-1	77272	75	20A
114R3411-5	77272	75	20A
114R3411-6	77272	75	20A
114R3411-7	77272	75	32B
114R3411-8	77272	75	32B
114R3412-1	77272	75	71
114R3412-4	77272	75	71
114R3413-1	77272	75	71
114R3414-1	77272	75	58
114R3414-4	77272	75	58
114R3414-5	77272	75	58
114R3417-1	77272	75	168
114R3423-2	77272	75	39
114R3425-2	77272	75	22
114R3427-1	77272	75	167
114R3428-1	77272	75	93
114R3433-1	77272	75	71
114R3433-5	77272	75	71
114R3434-5	77272	75	58
114R3438-9	77272	75	50
114R3464-1	77272	75	169
114R3464-5	77272	75	169
114R3464-8	77272	75	169
114R3489-1	77272	75	173
114R3503-1	77272	75	
114R3503-2	77272	75	
114R3505-1	77272	75	
114R3505-12	77272	75	
114R3505-15	77272	75	
114R3505-16	77272	75	
114R3505-2	77272	75	
114R3505-3	77272	75	
114R3505-4	77272	75	
114R3505-7	77272	75	
114R3505-8	77272	75	
114R3610-1	77272	75	29
114R3611-1	77272	75	20A
114R3621-1	77272	75	27
114R3621-2	77272	75	31
114R3623-1	77272	75	40
114R3625-1	77272	75	25
114R3630-1	77272	75	30
114R3632-1	77272	75	26
114R3650-1	77272	75	77A
114R3650-1	77272	222	95
114R3650-1	77272	244	67
114R3650-1	77272	KITS	
114R3650-10	77272	75	55A
114R3650-10	77272	KITS	
114R3650-11	77272	75	55A
114R3650-12	77272	71	73A
114R3650-12	77272	75	17A
114R3650-13	77272	71	73C
114R3650-13	77272	75	17A
114R3650-14	77272	75	18A
114R3650-14	77272	KITS	
114R3650-15	77272	75	18A
114R3650-15	77272	KITS	
114R3650-2	77272	75	78A
114R3650-2	77272	222	58
114R3650-2	77272	244	56
114R3650-2	77272	KITS	
114R3650-3	77272	75	80A
114R3650-3	77272	222	163
114R3650-3	77272	222	177
114R3650-3	77272	222	58
114R3650-3	77272	222	95
114R3650-3	77272	244	56
114R3650-3	77272	244	67
114R3650-4	77272	75	80A
114R3650-4	77272	244	26
114R3650-4	77272	244	67
114R3650-5	77272	75	76A
114R3650-5	77272	222	46
114R3650-5	77272	244	40
114R3650-5	77272	KITS	
114R3650-6	77272	75	81A
114R3650-6	77272	222	198
114R3650-6	77272	222	209
114R3650-6	77272	222	78
114R3650-6	77272	222	82
114R3650-6	77272	244	52
114R3650-6	77272	244	84
114R3650-6	77272	244	95
114R3650-7	77272	75	82A
114R3650-7	77272	244	84
114R3650-7	77272	244	95
114R3650-7	77272	KITS	
114R3650-8	77272	75	47A
114R3650-9	77272	75	47A
114R3650-9	77272	KITS	
114R6001-10	77272	75	10
114R6001-13	77272	75	5A
114R6001-14	77272	75	5A
114R6001-15	77272	75	10
114R6001-16	77272	75	10
114R6001-17	77272	75	5A
114R6001-18	77272	75	5A
114R6001-19	77272	75	5A
114R6001-20	77272	75	5A
114R6001-21	77272	75	10
114R6001-22	77272	75	10
114R6001-9	77272	75	10
114R6052-1	77272	75	8
114R6055-1	77272	75	9
114SK148-21	77272	32	
114SK177-12	77272	32	45
114SK177-14	77272	32	45
114SK177-16	77272	32	45
114SK199-27	77272	11C	80
114SK199-30	77272	11C	79
114SK203-1	77272	11A	
114SK282-5	77272	31	10A
114SK282-6	77272	31	10A
114SK286-3	77272	11B	
114SK286-4	77272	11B	
114SK2914-133	77272	14	2
114SK911-40	77272	11A	
114SK914-1	77272	11B	
114SK915-1	77272	11B	
114SK931-1	77272	11	
114SK969-1	77272	11B	
114SK970-3	77272	11B	
114SK972-1	77272	11	
114SK978-50	77272	11	
114SK979-1	77272	11B	
114SK980-1	77272	11A	
114SS601-1	77272	28	20

REFERENCE NUMBER	MFG CODE	FIG NUMBER	ITEM NUMBER
114SS601-2	77272	28	21
114SS601-3	77272	28	20
114SS601-4	77272	28	21
114SS601-5	77272	28	20
114SS601-6	77272	28	21
114SS601-7	77272	28	20
114SS601-8	77272	28	21
114SS602-4	77272	28	22
114SS603-1	77272	94	6
114SS603-1	77272	11C	25
114SS604-1	77272	28	20
114SS604-2	77272	28	21
114SS605-1	77272	28	
114SS651-1	77272	10	13
114SS651-1	77272	10	29
114SS651-1	77272	10	40
114SS658-3	77272	21	
114SS658-5	77272	11A	91
114SS661-1	81205	21	97G
114SS664-3	77272	28	
114SS664-4	77272	28	
114SS664-5	77272	28	
114SS664-6	77272	28	
114SS668-1	77272	20	68
114SS668-2	77272	20	68
114SS670-11	77272	21	
114SS670-12	77272	21	
114SS670-13	77272	21	65A
114SS677-1	77272	42B	19A
114S0100-1	77272	11	
114S0100-3	77272	11	
114S0200-1	77272	11A	
114S0200-3	77272	11A	
114S0200-7	77272	11A	
114S0200-8	77272	11A	
114S0300-1	77272	11B	
114S0300-3	77272	11B	
114S0300-7	77272	11B	
114S0400-1	77272	11C	
114S0400-7	77272	11C	
114S1004-1	77272	11	126
114S1004-3	77272	11	126
114S1102-283	77272	11	9
114S1102-367	77272	11	9B
114S1102-369	77272	11	9C
114S1102-397	77272	11	9A
114S1105-1	77272	11	
114S1105-293	77272	11	
114S1105-295	77272	11	67
114S1105-3	77272	11	
114S1105-313	77272	11	67
114S1105-341	77272	11	67
114S1105-405	77272	11	67
114S1105-406	77272	11	67
114S1105-459	77272	11	67
114S1105-460	77272	11	67
114S1105-499	77272	11	67
114S1105-5	77272	11	67
114S1105-500	77272	11	67
114S1105-506	77272	11	67
114S1105-7	77272	11	67
114S1106-1	77272	11	
114S1501-1	77272	11	6
114S1502-1	77272	11	7
114S1551-1	77272	10	
114S1551-1	77272	11	127
114S1551-11	77272	10	6
114S1551-113		10	
114S1551-13	77272	10	7
114S1551-131	77272	10	
114S1551-131	77272	11	127
114S1551-133	77272	10	
114S1551-170	77272	10	1
114S1551-172	77272	10	
114S1551-174	77272	10	
114S1551-179	77272	10	5
114S1551-180	77272	10	6
114S1551-181	77272	10	
114S1551-181	77272	11	127
114S1551-182	77272	10	
114S1551-183	77272	10	
114S1551-23	77272	10	8
114S1551-3	77272	10	
114S1551-7	77272	10	4
114S1551-9	77272	10	5
114S1552-1	77272	10	
114S1552-1	77272	11	125B
114S1552-3	77272	10	9
114S1555-1	77272	11	
114S1555-2	77272	11	
114S1555-27	77272	11	134
114S1555-27	77272	11A	20A
114S1555-28	77272	11	135
114S1555-28	77272	11A	22A
114S1602-169	77272	28	
114S1602-170	77272	28	
114S1602-171	77272	28	
114S1602-172	77272	28	
114S1602-3	77272	28	
114S1603-1	77272	28	
114S1603-5	77272	28	
114S1603-6	77272	28	
114S1604-1	77272	28	
114S1604-109	77272	28	
114S1604-208	77272	28	
114S1604-209	77272	28	
114S1604-3	77272	28	
114S1604-37	77272	28	26
114S1604-5	77272	28	
114S1607-101	77272	20	87A
114S1607-61	77272	20	88
114S1607-62	77272	20	88
114S1607-71	77272	20	102
114S1608-1	77272	11	2
114S1608-1	77272	28	
114S1610-1	77272	11	
114S1610-3	77272	11	
114S1610-63	77272	11	
114S1611-1	77272	11	
114S1611-3	77272	11	120
114S1611-3	77272	11B	24
114S1612-1	77272	11	
114S1612-1	77272	17	
114S1612-11	77272	17	
114S1612-15	77272	17	
114S1612-17	77272	17	
114S1612-23	77272	17	
114S1612-25	77272	17	5
114S1612-29	77272	17	
114S1612-3	77272	17	
114S1612-33	77272	17	
114S1612-43	77272	17	10
114S1612-51	77272	17	
114S1612-53	77272	17	15A
114S1612-57	77272	17	17A
114S1612-59	77272	17	27A
114S1612-61	77272	17	
114S1612-67	77272	17	
114S1612-69	77272	17	27A
114S1612-73	77272	17	
114S1612-75	77272	17	
114S1612-76	77272	17	

REFERENCE NUMBER	MFG CODE	FIG NUMBER	ITEM NUMBER
114S1612-77	77272	17	
114S1612-78	77272	17	
114S1612-79	77272	17	
114S1612-80	77272	17	
114S1612-9	77272	17	
114S1614-1	77272	11	
114S1615-1	77272	11	
114S1617-1	77272	11	
114S1618-1	77272	11	
114S1618-37	77272	11	3
114S1618-38	77272	11	3A
114S1618-46	77272	11	4
114S1618-5	77272	11	4
114S1619-1	77272	19	
114S1619-13	77272	16	
114S1619-21	77272	19	2
114S1619-23	77272	19	1
114S1619-27	77272	16	54
114S1619-27	77272	19	
114S1619-29	77272	16	
114S1619-29	77272	19	11
114S1619-29	77272	21	44
114S1619-31	77272	16	54
114S1619-31	77272	19	
114S1619-40	77272	19	
114S1619-5	77272	19	
114S1619-7	77272	19	7A
114S1620-1	77272	15	
114S1620-21	77272	15	50
114S1620-27	77272	15	
114S1620-41	77272	15	40
114S1620-43	77272	15	52
114S1620-57	77272	15	
114S1620-59	77272	15	44
114S1620-9	77272	15	108
114S1621-1	77272	16	
114S1621-11	77272	16	40
114S1621-23	77272	16	22
114S1621-27	77272	16	
114S1621-29	77272	16	
114S1621-3	77272	16	
114S1621-31	77272	16	
114S1621-42	77272	16	
114S1621-5	77272	16	56
114S1621-7	77272	16	55
114S1621-9	77272	16	39
114S1622-1	77272	11	
114S1622-3	77272	11	125A
114S1625-1	77272	11	
114S1626-1	77272	11	
114S1627-1	77272	11	
114S1628-1	77272	11	8
114S1628-1	77272	18	
114S1628-11	77272	18	1
114S1628-17	77272	11	8
114S1628-17	77272	18	
114S1629-1	77272	11	
114S1630-1	77272	11	
114S1631-1	77272	11	
114S1632-1	77272	28	
114S1632-17	77272	28	9
114S1632-18	77272	28	10
114S1632-19	77272	28	11
114S1632-20	77272	28	12
114S1632-23	77272	28	1
114S1632-27	77272	28	14
114S1632-29	77272	28	
114S1632-31	77272	28	
114S1632-33	77272	28	15
114S1632-35	77272	28	2
114S1632-39	77272	28	6
114S1632-41	77272	28	14B
114S1632-45	77272	28	
114S1632-47	77272	28	
114S1632-5	77272	28	
114S1632-53	77272	28	7
114S1632-59	77272	28	
114S1632-63	77272	28	
114S1632-65	77272	28	
114S1632-66	77272	28	16
114S1632-7	77272	28	5A
114S1634-1	77272	15	
114S1634-63	77272	15	
114S1634-65	77272	15	
114S1634-69	77272	15	
114S1634-89	77272	15	
114S1634-97	77272	15	
114S1635-1	77272	16	57
114S1635-3	77272	16	
114S1635-47	77272	16	57
114S1635-49	77272	16	
114S1635-5	77272	16	
114S1635-51	77272	16	
114S1635-73	77272	16	
114S1635-74	77272	16	48
114S1636-1	77272	11	
114S1637-1	77272	11	
114S1637-11	77272	11	
114S1637-7	77272	11	38
114S1643-1	77272	31	
114S1643-29	77272	31	15
114S1643-3	77272	31	13
114S1643-5	77272	31	14
114S1647-1	77272	20	
114S1647-13	77272	20	1
114S1647-14	77272	20	1
114S1647-17	77272	20	1
114S1647-18	77272	20	1
114S1647-2	77272	20	
114S1647-5	77272	20	14
114S1647-6	77272	20	13
114S1647-9	77272	20	14
114S1648-1	77272	20	
114S1648-2	77272	20	
114S1649-5	77272	20	67
114S1649-6	77272	20	67
114S1655-1	77272	11	
114S1655-13	77272	11	65A
114S1655-14	77272	11	66B
114S1655-15	77272	11	65
114S1655-16	77272	11	66
114S1655-17	77272	11	65B
114S1655-18	77272	11	66A
114S1655-2	77272	11	64
114S1659-1	77272	11	141B
114S1659-2	77272	11	141B
114S1661-1	77272	28	
114S1661-2	77272	28	
114S1661-6	77272	28	
114S1664-56	77272	42A	3A
114S1664-72	77272	28	24J
114S1664-79	77272	28	24H
114S1672-1	77272	11	
114S1672-2	77272	11	
114S1672-3	77272	11	4A
114S1673-1	77272	11	
114S1673-2	77272	11	
114S1703-1	77272	11	
114S1703-15	77272	11	
114S1703-17	77272	11	141A
114S1704-1	77272	15	31D
114S1704-13	77272	15	

REFERENCE NUMBER	MFG CODE	FIG NUMBER	ITEM NUMBER
114S1704-13	77272	20	
114S1704-3	77272	16	26C
114S1704-5	77272	20	110
114S1704-6	77272	20	110
114S1704-7	77272	15	
114S1704-9	77272	16	
114S1707-1	77272	16	53
114S1707-1	77272	19	
114S1708-1	77272	16	24A
114S1710-1	77272	16	
114S1710-3	77272	16	3
114S1712-7	77272	18	
114S1712-7	77272	28	13
114S1712-9	77272	18	
114S1712-9	77272	28	
114S1713-3	77272	20	2
114S1713-4	77272	20	2
114S1714-11	77272	28	
114S1714-12	77272	28	
114S1714-29	77272	28	17
114S1714-30	77272	28	18
114S1715-11	77272	28	
114S1715-12	77272	28	
114S1715-35	77272	28	23
114S1715-36	77272	28	24
114S1715-37	77272	28	
114S1715-38	77272	28	
114S1716-1	77272	16	
114S1716-13	77272	15	4
114S1716-17	77272	15	2
114S1716-19	77272	15	10C
114S1716-3	77272	15	41
114S1716-3	77272	16	
114S1716-5	77272	15	42
114S1716-7	77272	15	38
114S1717-1	77272	28	19
114S1722-15	77272	20	69
114S1722-16	77272	20	69
114S1723-17	77272	20	15
114S1723-18	77272	20	15
114S1724-1	77272	20	50
114S1725-1	77272	20	60
114S1725-2	77272	20	60
114S1726-1	77272	20	58
114S1727-3	77272	20	33
114S1728-1	77272	20	42
114S1729-1	77272	20	66A
114S1729-2	77272	20	66A
114S1730-1	77272	20	37
114S1730-2	77272	20	29
114S1730-2	77272	20	54
114S1730-5	77272	20	
114S1731-5	77272	20	
114S1731-6	77272	20	28
114S1731-7	77272	20	
114S1733-6	77272	20	49
114S1733-8	77272	20	25A
114S1734-1	77272	20	64
114S1735-1	77272	20	38
114S1735-2	77272	20	38
114S1736-5	77272	20	
114S1736-6	77272	20	
114S1737-1	77272	20	7
114S1737-2	77272	20	7
114S1739-1	77272	20	78
114S1739-2	77272	20	
114S1740-4	77272	20	36A
114S1741-1	77272	20	40
114S1741-2	77272	20	40
114S1742-1	77272	20	56
114S1742-2	77272	20	56
114S1743-1	77272	20	32
114S1743-2	77272	20	32
114S1757-1	77272	17	20
114S1758-1	77272	17	19
114S1803-1	77272	11	84
114S1803-3	77272	11	68
114S1810-1	77272	11	61
114S1810-3	77272	11	61
114S1813-1	77272	11	69
114S1813-3	77272	11	69
114S1814-1	77272	11	110
114S1814-11	77272	11	115A
114S1814-14	77272	11	115
114S1814-15	77272	11	115B
114S1814-3	77272	11	111
114S1814-5	77272	11	114
114S1814-7	77272	11	111A
114S1814-9	77272	11	111B
114S1815-1	77272	11	62
114S1817-1	77272	11	123
114S1819-1	77272	15	27C
114S1819-3	77272	15	
114S1820-11	77272	15	
114S1820-15	77272	15	
114S1820-7	77272	15	15
114S1820-9	77272	15	17C
114S1823-3	77272	238	9
114S1826-1	77272	11	5
114S1826-1	77272	81	214
114S1826-3	77272	11C	38
114S1835-3	77272	238	10
114S1842-5	77272	11	61D
114S1848-1	77272	11	67A
114S1848-5	77272	11	67A
114S1849-1	77272	16	4
114S1850-1	77272	15	36B
114S1850-13	77272	15	
114S1850-15	77272	11	133
114S1850-17	77272	15	
114S1850-19	77272	15	
114S1850-21	77272	15	28D
114S1850-9	77272	15	12A
114S1851-1	77272	15	25
114S1852-1	77272	31	
114S1852-3	77272	31	
114S1852-4	77272	31	
114S1853-15	77272	15	46
114S1853-17	77272	15	47
114S1854-2	77272	11	127A
114S1859-1	77272	20	79
114S1860-1	77272	20	83
114S1860-1	77272	20	96
114S1860-4	77272	20	96
114S1861-11	77272	20	101
114S1861-9	77272	20	
114S1863-5	77272	20	87
114S1863-6	77272	20	100
114S1864-11	77272	20	
114S1864-9	77272	20	90
114S1865-1	77272	20	95A
114S1865-3	77272	20	
114S1866-11	77272	17	22A
114S1866-3	77272	17	
114S1866-9	77272	17	
114S1868-9	77272	17	18
114S1869-1	77272	15	34
114S1869-3	77272	16	31
114S1869-4	77272	16	32
114S1869-5	77272	15	
114S1869-5	77272	16	
114S1869-5	77272	20	

REFERENCE NUMBER	MFG CODE	FIG NUMBER	ITEM NUMBER
114S1869-7	77272	15	
114S1869-7	77272	16	28
114S1869-7	77272	20	
114S1870-13	77272	16	
114S1870-15	77272	16	12
114S1870-3	77272	16	
114S1870-7	77272	16	15
114S1871-1	77272	16	
114S1871-3	77272	16	18
114S1872-1	77272	16	
114S1872-3	77272	16	9
114S1873-1	77272	16	
114S1873-3	77272	16	21
114S1875-1	77272	11	131
114S1875-3	77272	11	132
114S1875-5	77272	11	133F
114S1875-7	80205	11	133G
114S1880-1	77272	11	10
114S1880-13	77272	11	10
114S1880-15	77272	11	11B
114S1880-3	77272	11	11B
114S1881-1	77272	11	16A
114S1881-10	77272	11	16A
114S1881-11	77272	11	16B
114S1881-3	77272	11	16B
114S1882-1	77272	11	109
114S1883-1	77272	238	1
114S1883-2	77272	238	8A
114S1883-3	77272	238	
114S1883-4	77272	238	
114S1885-1	77272	11	54
114S1886-1	77272	11	57
114S1889-1	77272	11	56A
114S1891-1	77272	238	59
114S1891-3	77272	11	40
114S1891-3	77272	11	91
114S1898-7	77272	20	
114S1898-8	77272	20	
114S1901-1	77272	31	
114S1901-121	77272	31	4
114S1901-122	77272	31	4
114S1901-43	77272	31	9
114S1901-63	77272	31	6
114S1901-67	77272	31	3
114S1901-7	77272	31	
114S1901-75	77272	31	
114S1901-81	77272	31	5
114S1901-85	77272	31	7
114S1901-86	77272	31	7
114S1901-9	77272	31	
114S1902-1	77272	31	
114S1902-187	77272	31	
114S1902-215	77272	31	
114S1902-223	77272	31	
114S1902-259	77272	31	
114S1902-261	77272	31	
114S1902-316	77272	31	11
114S1902-330	77272	31	
114S1902-333	77272	31	
114S1902-334	77272	31	
114S1902-335	77272	31	
114S1902-336	77272	31	
114S1902-354	77272	31	11
114S1902-386	77272	31	
114S1902-387	77272	31	
114S1902-445	77272	31	10
114S1902-446	77272	31	10A
114S1902-447	77272	31	10A
114S1902-454	77272	31	
114S1902-455	77272	31	
114S1902-460	77272	31	10
114S1902-461	77272	31	
114S1902-71	77272	31	10A
114S1902-72	77272	31	10A
114S1903-1	77272	31	
114S1903-36	77272	31	
114S1903-5	77272	31	
114S1903-53	77272	31	
114S1903-6	77272	31	
114S1903-73	77272	31	4
114S1903-739	77272	31	
114S1903-74	77272	31	4
114S1903-75	77272	31	
114S1903-76	77272	31	
114S1903-86	77272	31	4
114S1903-87	77272	31	4
114S1951-1	77272	11	85
114S1951-7	77272	11	85
114S1951-9	77272	11	85
114S1952-1	77272	11	102A
114S1953-1	77272	11	86
114S1954-1	77272	11	36A
114S1954-15	77272	11	36A
114S1954-22	77272	11	36A
114S1954-3	77272	11	36B
114S1957-1	77272	11	47
114S1958-1	77272	11	52
114S1960-5	77272	11	94
114S1961-1	77272	11	71
114S1962-1	77272	11	82A
114S1962-2	77272	11	82B
114S1963-1	77272	11	83
114S2001-1	77272	11A	
114S2001-3	77272	11A	
114S2001-35	77272	11A	97
114S2001-36	77272	11A	98
114S2001-37	77272	11A	
114S2001-38	77272	11A	
114S2001-39	77272	11A	97
114S2001-40	77272	11A	98
114S2001-5	77272	11A	97
114S2001-7	77272	11A	98
114S2003-1	77272	11A	
114S2003-13	77272	11A	
114S2003-14	77272	11A	
114S2003-15	77272	11A	
114S2003-18	77272	11A	1
114S2003-23	77272	11A	1
114S2003-24	77272	11A	1
114S2003-31	77272	11A	
114S2003-5	77272	11A	
114S2003-9	77272	11A	
114S2004-1	77272	11A	18C
114S2004-3	77272	11A	
114S2112-30	77272	13	2D
114S2112-5	77272	13	
114S2112-6	77272	13	
114S2151-1	77272	11A	
114S2151-155	77272	11A	105B
114S2151-156	77272	11A	105B
114S2151-3	77272	11A	
114S2151-47	77272	11A	105C
114S2151-49	77272	11A	
114S2151-51	77272	11A	
114S2151-57	77272	11A	
114S2151-58	77272	11A	
114S2151-71	77272	11A	
114S2151-72	77272	11A	
114S2153-1	77272	11A	
114S2153-2	77272	11A	
114S2305-1	77272	11A	
114S2305-13	77272	11A	15A

REFERENCE NUMBER	MFG CODE	FIG NUMBER	ITEM NUMBER
114S2352-21	77272	11A	
114S2352-23	77272	11A	
114S2352-25	77272	11A	
114S2352-27	77272	11A	
114S2352-35	77272	11A	10
114S2352-36	77272	11A	10
114S2352-37	77272	11A	4
114S2352-38	77272	11A	5
114S2352-39	77272	11A	7
114S2352-40	77272	11A	8
114S2352-41	77272	11A	7
114S2352-42	77272	11A	8
114S2352-43	77272	11A	
114S2352-44	77272	11A	
114S2352-45	77272	11A	
114S2352-46	77272	11A	
114S2352-47	77272	11A	
114S2352-61	77272	11A	
114S2352-62	77272	11A	
114S2352-63	77272	11A	
114S2352-64	77272	11A	
114S2352-65	77272	11A	
114S2352-67	77272	11A	
114S2352-68	77272	11A	
114S2352-69	77272	11A	
114S2352-70	77272	11A	
114S2352-71	77272	11A	
114S2353-1	77272	11A	
114S2353-3	77272	11A	12
114S2452-1	77272	11A	84A
114S2452-2	77272	11A	84A
114S2501-1	77272	11A	
114S2501-193	77272	11A	
114S2501-194	77272	11A	
114S2501-3	77272	11A	
114S2503-1	77272	11A	
114S2503-13	77272	11A	
114S2503-163	77272	11A	16B
114S2503-235	77272	11A	
114S2503-57	77272	11A	16A
114S2505-1	77272	11A	16
114S2505-3	77272	11A	15T
114S2505-33	77272	11A	15U
114S2506-1	77272	11A	
114S2506-15	77272	11A	19
114S2506-16	77272	11A	19
114S2506-17	77272	11A	19
114S2506-18	77272	11A	19
114S2506-2	77272	11A	
114S2506-37	77272	11A	
114S2506-38	77272	11A	
114S2551-1	77272	10	
114S2551-31	77272	10	11
114S2552-1	77272	10	
114S2552-21	77272	10	17
114S2553-1	77272	10	
114S2553-16	77272	10	28
114S2554-1	77272	10	
114S2554-31	77272	10	15
114S2554-32	77272	10	16
114S2554-39	77272	10	
114S2554-40	77272	10	
114S2555-1	77272	10	
114S2555-21	77272	10	25
114S2555-22	77272	10	26
114S2556-1	77272	10	
114S2556-51	77272	10	30
114S2556-52	77272	10	31
114S2557-1	77272	11A	
114S2557-39	77272	11A	46
114S2558-1	77272	11A	
114S2558-29	77272	11A	30
114S2558-3	77272	10	
114S2559-1	77272	11A	
114S2559-3	77272	10	
114S2559-41	77272	11A	59
114S2559-42	77272	11A	61
114S2560-1	77272	11A	
114S2560-146	77272	11A	20
114S2560-147	77272	11A	22
114S2560-2	77272	11A	
114S2560-71	77272	11A	20
114S2560-72	77272	11A	22
114S2560-83	77272	11A	23B
114S2563-1	77272	10	10
114S2564-1	77272	10	24
114S2564-2	77272	10	24
114S2565-1	77272	10	10
114S2565-3	77272	10	14
114S2565-3	77272	10	24
114S2565-4	77272	10	14
114S2565-4	77272	10	24
114S2567-1	77272	11A	47
114S2568-1	77272	11A	31
114S2569-1	77272	11A	60
114S2569-2	77272	11A	62
114S2569-3	77272	11A	60A
114S2569-3	77272	11A	62A
114S2569-3	77272	11B	49
114S2570-1	77272	11A	
114S2570-2	77272	11A	
114S2570-3	77272	11B	
114S2570-4	77272	11B	
114S2570-49	77272	11A	21
114S2570-50	77272	11A	23
114S2570-51	77272	11A	21A
114S2570-51	77272	11B	55
114S2570-52	77272	11A	23A
114S2570-52	77272	11B	56
114S2601-1	77272	271	
114S2601-11	77272	271	
114S2601-13	77272	271	
114S2601-3	77272	271	
114S2601-5	77272	271	
114S2601-7	77272	271	
114S2601-9	77272	271	
114S2602-1	77272	11A	96A
114S2602-1	77272	271	
114S2602-3	77272	11A	96A
114S2602-3	77272	271	
114S2602-5	77272	11A	96A
114S2602-5	77272	271	
114S2602-7	77272	271	
114S2604-2	77272	271	9A
114S2605-3	77272	11B	
114S2605-5	77272	32	25
114S2605-5	77272	11A	2
114S2605-5	77272	11B	29
114S2605-6	77272	11A	
114S2607-1	77272	11A	
114S2608-3	77272	11A	
114S2608-38	77272	11A	18A
114S2609-11	77272	18	
114S2609-11	77272	18	163
114S2609-11	77272	18	77
114S2609-11	77272	32	
114S2609-11	77272	11B	
114S2610-17	77272	18	170
114S2610-17	77272	18	172
114S2610-19	77272	18	175
114S2610-19	77272	32	
114S2610-29	77272	18	174

REFERENCE NUMBER	MFG CODE	FIG NUMBER	ITEM NUMBER
114S2610-29	77272	32	
114S2610-35	77272	18	169
114S2610-35	77272	18	173
114S2610-35	77272	32	
114S2610-41	77272	18	
114S2610-41	77272	11A	17
114S2610-61	77272	18	171
114S2610-61	77272	32	
114S2610-62	77272	18	
114S2610-7	77272	18	
114S2610-7	77272	32	
114S2610-7	77272	11B	
114S2612-1	77272	11A	
114S2612-11	77272	11A	99
114S2612-13	77272	11A	100
114S2612-14	77272	11A	101
114S2612-15	77272	11A	102
114S2612-16	77272	11A	102
114S2612-17	77272	11A	
114S2612-18	77272	11A	
114S2612-19	77272	11A	103
114S2612-2	77272	11A	
114S2612-21	77272	11A	105
114S2612-22	77272	11A	105
114S2612-23	77272	11A	104
114S2613-1	77272	25	
114S2613-1	77272	11A	92
114S2613-13	77272	25	26
114S2613-15	77272	25	21
114S2613-17	77272	25	27
114S2613-19	77272	25	22
114S2613-21	77272	25	4
114S2613-23	77272	25	30
114S2615-1	77272	25	2C
114S2616-1	77272	25	
114S2616-3	77272	25	17
114S2617-1	77272	24	
114S2618-1	77272	24	27
114S2618-3	77272	24	18
114S2618-5	77272	24	21
114S2619-1	77272	24	3
114S2619-11	77272	24	
114S2619-3	77272	24	4
114S2619-5	77272	24	6D
114S2619-7	77272	24	
114S2619-9	77272	24	
114S2623-3	77272	25	31
114S2623-3	77272	26	
114S2623-4	77272	26	24
114S2623-5	77272	26	
114S2623-6	77272	25	31
114S2623-6	77272	26	
114S2623-7	77272	26	
114S2627-1	77272	271	
114S2627-2	77272	271	
114S2627-7	77272	271	
114S2628-1	77272	11A	76
114S2628-1	77272	271	14
114S2628-10	77272	11A	84
114S2628-10	77272	271	14B
114S2628-2	77272	11A	77
114S2628-2	77272	271	14
114S2628-3	77272	11A	78
114S2628-3	77272	271	14
114S2628-5	77272	11A	79
114S2628-5	77272	271	14A
114S2628-6	77272	11A	80
114S2628-6	77272	271	14
114S2628-7	77272	11A	81
114S2628-7	77272	271	14
114S2628-8	77272	11A	82
114S2628-8	77272	271	14
114S2628-9	77272	11A	83
114S2628-9	77272	271	14
114S2633-7	77272	32	
114S2638-2	77272	11A	
114S2638-4	77272	11A	
114S2638-5	77272	11A	110
114S2638-6	77272	11A	111
114S2638-7	77272	11A	112
114S2701-1	77272	11A	34
114S2701-1	77272	11A	48
114S2701-1	77272	11A	63
114S2703-1	77272	271	16
114S2704-1	77272	11A	33
114S2704-1	77272	11A	49
114S2709-1	77272	271	23A
114S2710-23	77272	11A	16D
114S2712-1	77272	10	
114S2713-2	77272	271	22A
114S2714-13	77272	11A	32
114S2714-13	77272	11A	64
114S2717-3	77272	11A	10
114S2717-5	77272	11A	7
114S2717-6	77272	11A	8
114S2717-7	77272	11A	11
114S2717-7	77272	11A	6
114S2717-7	77272	11A	9
114S2717-8	77272	11A	11
114S2717-8	77272	11A	6
114S2717-8	77272	11A	9
114S2721-1	77272	16	44
114S2721-5	77272	16	44
114S2721-5	77272	19	6
114S2721-5	77272	28	29
114S2728-2	77272	11	85A
114S2741-1	77272	12	
114S2741-1	77272	11A	92A
114S2741-10	77272	12	6
114S2741-11	77272	12	7
114S2741-12	77272	12	8
114S2741-13	77272	12	9
114S2741-14	77272	12	10
114S2741-2	77272	12	
114S2741-2	77272	11A	92A
114S2741-3	77272	12	1
114S2741-4	77272	12	2
114S2741-49	77272	12	11
114S2741-5	77272	12	3
114S2741-50	77272	12	12
114S2741-6	77272	12	4
114S2741-64	77272	12	14
114S2741-79	77272	12	15
114S2741-8	77272	12	5
114S2741-9	77272	12	6
114S2741-99	77272	12	16
114S2745-1	77272	11A	11
114S2745-1	77272	11A	6
114S2745-1	77272	11A	9
114S2803-1	77272	271	23
114S2812-1	77272	11A	87A
114S2812-2	77272	11A	87A
114S2813-1	77272	11A	87A
114S2813-11	77272	11A	90
114S2813-12	77272	11A	90
114S2813-2	77272	11A	87A
114S2825-1	77272	25	13
114S2828-1	77272	10	47
114S2828-1	77272	11	141
114S2828-1	77272	11A	29
114S2828-1	77272	11A	45
114S2828-1	77272	11A	58

REFERENCE NUMBER	MFG CODE	FIG NUMBER	ITEM NUMBER
114S2828-1	77272	11A	75
114S2828-1	77272	11B	54
114S2828-1	77272	11B	61
114S2831-1	77272	25	15
114S2832-1	77272	24	23
114S2833-8	77272	11B	
114S2835-1	77272	11A	3
114S2835-11	77272	11A	3A
114S2837-1	77272	11A	106
114S2837-2	77272	11A	106
114S2837-3	77272	11A	107
114S2837-5	77272	11A	107
114S2838-1	77272	11A	88
114S2838-3	77272	11A	89
114S2839-1	77272	11A	12A
114S2843-1	77272	10	
114S2843-1	77272	10	12
114S2844-1	77272	24	13
114S2845-1	77272	25	20
114S2845-2	77272	25	
114S2845-3	77272	25	
114S2845-4	77272	25	18
114S2846-1	77272	24	
114S2846-11	77272	24	9
114S2846-12	77272	24	9
114S2846-2	77272	24	
114S2846-5	77272	24	
114S2847-1	77272	24	
114S2847-13	77272	24	25
114S2848-1	77272	25	
114S2850-1	77272	18	20
114S2850-11	77272	18	
114S2851-1	77272	24	
114S2853-1	77272	24	16B
114S2859-1	77272	24	19
114S2860-1	77272	24	26
114S2865-1	77272	25	
114S2865-3	77272	25	10
114S2866-1	77272	25	6
114S2868-3	77272	26	19
114S2869-1	77272	26	23
114S2870-1	77272	26	
114S2871-1	77272	26	
114S2872-1	77272	26	
114S2872-6	77272	26	7
114S2873-1	77272	26	8
114S2874-1	77272	26	22
114S2875-1	77272	26	1
114S2876-1	77272	26	27
114S2877-1	77272	26	16
114S2877-3	77272	26	17
114S2889-4	77272	11B	
114S2893-1	77272	11A	43A
114S2893-1	77272	11A	56A
114S2893-1	77272	11A	73B
114S2893-11	77272	11A	43C
114S2893-11	77272	11A	56C
114S2893-11	77272	11A	73A
114S2893-11	77272	11B	52A
114S2893-13	77272	10	45
114S2893-13	77272	11	139B
114S2893-13	77272	11A	26
114S2893-13	77272	11B	57
114S2893-15	77272	11	139A
114S2893-17	77272	11A	27
114S2893-17	77272	11B	58
114S2893-4	77272	11A	43B
114S2893-4	77272	11A	56B
114S2893-5	77272	11A	27
114S2893-5	77272	11B	58
114S2893-6	77272	10	44
114S2901-1	77272	28	
114S2901-1	77272	11A	109
114S2901-1	77272	11B	125
114S2901-11	77272	28	28B
114S2901-15	77272	16	43
114S2901-15	77272	19	7
114S2901-15	77272	28	28A
114S2901-16	77272	16	45
114S2901-16	77272	19	5
114S2901-16	77272	28	30
114S2901-9	77272	28	
114S2901-9	77272	11A	109
114S2901-9	77272	11B	125
114S2902-1	77272	24	
114S2902-1	77272	11A	92
114S2902-29	77272	24	10
114S2902-3	77272	24	2C
114S2902-30	77272	24	11
114S2902-54	77272	24	2C
114S2902-59	77272	24	2C
114S2902-61	77272	24	
114S2903-1	77272	10	
114S2903-25	77272	10	20
114S2903-27	77272	10	22
114S2903-29	77272	10	19
114S2903-31	77272	10	
114S2903-33	77272	10	
114S2903-35	77272	10	21
114S2903-47	77272	10	
114S2903-49	77272	10	
114S2903-5	77272	10	
114S2903-62	77272	10	
114S2903-7	77272	10	
114S2903-83	77272	10	18
114S2904-113	77272	14	
114S2904-113	77272	11A	108
114S2904-115	77272	14	
114S2904-115	77272	11A	108
114S2904-117	77272	14	1
114S2904-119	77272	14	1
114S2904-121	77272	14	6
114S2904-122	77272	14	6
114S2904-123	77272	14	10
114S2904-124	77272	14	10
114S2904-125	77272	14	14
114S2904-126	77272	14	14
114S2904-127	77272	14	20
114S2904-128	77272	14	20
114S2904-129	77272	13	95
114S2904-131	77272	13	95
114S2904-133	77272	14	41
114S2904-134	77272	14	41
114S2904-15	77272	14	52
114S2904-153	77272	14	3
114S2904-155	77272	14	8
114S2904-156	77272	14	8
114S2904-157	77272	14	12
114S2904-159	77272	14	17
114S2904-16	77272	14	52
114S2904-160	77272	14	17
114S2904-161	77272	14	22
114S2904-162	77272	14	22
114S2904-163	77272	13	96
114S2904-165	77272	14	43
114S2904-166	77272	14	43
114S2904-167	77272	14	3
114S2904-169	77272	14	3
114S2904-171	77272	13	96
114S2904-173	77272	13	96
114S2904-177	77272	14	
114S2904-177	77272	11B	124

REFERENCE NUMBER	MFG CODE	FIG NUMBER	ITEM NUMBER
114S2904-178	77272	14	
114S2904-178	77272	11B	124
114S2904-199	77272	14	1
114S2904-200	77272	14	1
114S2904-39	77272	14	38
114S2904-41	77272	14	39
114S2904-41	77272	14	40
114S2905-1	77272	18	
114S2905-123	77272	18	
114S2905-139	77272	18	92
114S2905-139	77272	18	99
114S2905-141	77272	18	
114S2905-141	77272	18	93
114S2905-143	77272	18	91
114S2905-143	77272	18	98
114S2905-201	77272	18	
114S2905-201	77272	18	93A
114S2905-201	77272	18	95A
114S2905-201	77272	18	99A
114S2905-201	77272	32	6
114S2905-296	77272	18	
114S2905-297	77272	18	
114S2905-298	77272	18	
114S2905-299	77272	18	
114S2905-305	77272	18	
114S2905-309	77272	18	
114S2905-313	77272	18	
114S2905-358	77272	18	101
114S2905-397	77272	18	90
114S2905-399	77272	18	95
114S2905-401	77272	18	97
114S2905-49	77272	18	
114S2905-51	77272	18	
114S2905-53	77272	18	
114S2905-54	77272	18	
114S2905-55	77272	18	
114S2905-57	77272	27S	
114S2905-59	77272	18	
114S2905-61	77272	18	
114S2905-63	77272	18	
114S2905-64	77272	18	
114S2905-65	77272	18	
114S2905-67	77272	18	
114S2905-69	77272	18	
114S2905-71	77272	18	
114S2905-72	77272	18	
114S2905-73	77272	18	
114S2905-99	77272	18	
114S2905-99	77272	31	
114S2906-114	77272	11A	
114S2906-51	77272	11A	
114S2914-1	77272	14	
114S2914-1	77272	11A	108
114S2914-10	77272	14	21
114S2914-101	77272	14	21
114S2914-11	77272	14	16
114S2914-115	77272	14	42
114S2914-117	77272	14	
114S2914-119	77272	14	2
114S2914-12	77272	14	16
114S2914-120	77272	14	16
114S2914-121	77272	14	16
114S2914-122	77272	14	7
114S2914-123	77272	14	7
114S2914-129	77272	14	2
114S2914-13	77272	14	15
114S2914-131	77272	14	7
114S2914-132	77272	14	2
114S2914-135	77272	14	7
114S2914-137	77272	14	37C
114S2914-138	77272	14	37C
114S2914-139	77272	13	95
114S2914-14	77272	14	15
114S2914-140	77272	14	21
114S2914-144	77272	14	16
114S2914-145	77272	13	96
114S2914-146	77272	14	21
114S2914-148	77272	14	21
114S2914-15	77272	14	11
114S2914-150	77272	14	16
114S2914-158	77272	14	12
114S2914-16	77272	14	11
114S2914-17	77272	14	7
114S2914-18	77272	14	7
114S2914-19	77272	14	2
114S2914-2	77272	14	
114S2914-2	77272	11A	108
114S2914-20	77272	14	2
114S2914-3	77272	14	
114S2914-3	77272	11B	124
114S2914-4	77272	14	
114S2914-4	77272	11B	124
114S2914-50	77272	13	96
114S2914-51	77272	14	44
114S2914-52	77272	13	96
114S2914-53	77272	14	23
114S2914-54	77272	14	23
114S2914-55	77272	14	19
114S2914-56	77272	14	23
114S2914-56	77272	14	4
114S2914-57	77272	14	23
114S2914-57	77272	14	4
114S2914-58	77272	14	23
114S2914-58	77272	14	4
114S2914-59	77272	14	18
114S2914-60	77272	14	13
114S2914-61	77272	14	9
114S2914-62	77272	14	4
114S2914-63	77272	14	4
114S2914-65	77272	14	
114S2914-66	77272	14	44
114S2914-67	77272	14	18
114S2914-68	77272	14	13
114S2914-7	77272	13	95
114S2914-8	77272	13	95
114S2914-81	77272	14	23
114S2914-81	77272	14	4
114S2914-82	77272	14	37A
114S2914-82	77272	14	48
114S2914-83	77272	14	37B
114S2914-84	77272	14	37C
114S2914-85	77272	13	95
114S2914-86	77272	13	95
114S2914-87	77272	14	21
114S2914-88	77272	14	21
114S2914-9	77272	14	21
114S2914-93	77272	14	2
114S2914-94	77272	14	2
114S2915-1	77272	18	
114S2915-20	77272	18	
114S2915-38	77272	18	100A
114S2915-38	77272	18	94A
114S2915-38	77272	27S	14K
114S2915-39	77272	18	
114S2915-40	77272	18	
114S2915-41	77272	18	
114S2915-42	77272	18	
114S2915-59	77272	11A	1B
114S2915-60	77272	18	
114S2915-61	77272	18	
114S2915-61	77272	27S	
114S2915-62	77272	18	

REFERENCE NUMBER	MFG CODE	FIG NUMBER	ITEM NUMBER
114S2915-62	77272	27S	
114S2915-70	77272	18	90
114S2915-71	77272	18	95
114S2915-72	77272	18	97
114S2915-72	77272	27S	14
114S2915-73	77272	18	101
114S2950-11	77272	42C	3
114S2950-16	77272	42C	
114S2950-17	77272	11C	14
114S2950-17	77272	42C	
114S2950-18	77272	11C	14
114S2950-18	77272	42C	
114S2950-19	77272	11C	14
114S2950-19	77272	42C	
114S2950-9	77272	11C	14
114S2950-9	77272	42C	
114S2951-25	77272	42A	38
114S2951-26	77272	42A	38
114S2951-9	77272	42C	35
114S2952-5	77272	42C	29
114S295210	77272	42A	
114S2953-1	77272	42A	33
114S2953-1	77272	42C	34
114S2957-1	77272	42C	
114S2960-1	77272	42C	16A
114S2960-4	77272	42A	15A
114S2960-5	77272	42A	
114S2961-1	77272	42A	40
114S2961-1	77272	42C	37
114S2962-1	77272	42A	19
114S2962-1	77272	42C	20
114S2963-1	77272	42A	8
114S2963-1	77272	42C	9
114S2964-1	77272	42C	
114S2964-15	77272	42A	1
114S2964-16	77272	42A	1
114S2966-14	77272	42A	28
114S2966-15	77272	28	24L
114S2966-15	77272	42A	
114S2966-16	77272	11	142
114S2966-16	77272	42A	
114S2966-3	77272	28	24L
114S2966-3	77272	42A	
114S2966-4	77272	11	142
114S2966-4	77272	42A	
114S2966-5	77272	42A	28
114S2967-1	77272	42A	5
114S2967-1	77272	42C	6
114S2968-1	77272	42A	36
114S2969-1	77272	42A	37
114S2970-1	77272	42A	34
114S2970-2	77272	42A	35
114S2971-10	77272	42B	42
114S2971-108	77272	42B	83
114S2971-109	77272	42B	83
114S2971-13	77272	42B	56
114S2971-14	77272	42B	5
114S2971-21	77272	42B	27
114S2971-23	77272	42B	77
114S2971-24	77272	42B	29
114S2971-25	77272	42B	67
114S2971-26	77272	42B	20
114S2971-27	77272	42B	84
114S2971-28	77272	42B	80
114S2971-30	77272	42B	65
114S2971-31	77272	42B	81
114S2971-32	77272	42B	66
114S2971-35	77272	42B	60
114S2971-38	77272	42B	75
114S2971-52	77272	42B	15
114S2971-53	77272	42B	4
114S2971-6	77272	42B	70
114S2971-67	77272	42B	70
114S2971-7	77272	42B	73A
114S2971-70	77272	42B	83
114S2971-71	77272	42B	83
114S2971-72	77272	11	146
114S2971-72	77272	28	24S
114S2971-72	77272	42B	
114S2971-73	77272	42B	34A
114S2971-75	77272	42B	35
114S2971-8	77272	42B	53A
114S2971-82	77272	42B	53A
114S2971-85	77272	42B	42
114S2971-86	77272	11	146
114S2971-86	77272	28	24S
114S2971-86	77272	42B	
114S2971-90	77272	42B	4
114S2973-1	77272	42B	69
114S2974-1	77272	42B	68
114S2977-1	77272	42B	56
114S2986-1	77272	42B	
114S3001-1	77272	11B	
114S3001-11	77272	11B	
114S3001-3	77272	11B	
114S3001-9	77272	11B	
114S3003-1	77272	11B	
114S3003-3	77272	11B	
114S3003-4	77272	11B	
114S3004-1	77272	11B	
114S3104-1	77272	11B	
114S3104-107	77272	11B	
114S3104-108	77272	11B	
114S3104-129	77272	11B	
114S3104-130	77272	11B	
114S3104-2	77272	11B	
114S3104-79	77272	11B	
114S3105-1	77272	11B	
114S3105-2	77272	11B	
114S3107-2	77272	11B	
114S3107-50	77272	11B	
114S3107-52	77272	11B	
114S3108-1	77272	11B	
114S3108-3	77272	11B	
114S3108-85	77272	11B	
114S3108-87	77272	11B	
114S3108-93	77272	11B	
114S3108-94	77272	11B	
114S3156-166	77272	11B	
114S3156-2	77272	11B	
114S3156-4	77272	11B	
114S3157-5	77272	11B	
114S3157-96	77272	11B	
114S3304-111	77272	11B	
114S3304-21	77272	11B	
114S3304-85	77272	11B	
114S3305-35	77272	11B	
114S3305-43	77272	11B	
114S3305-44	77272	11B	
114S3305-5	77272	11B	
114S3308-1	77272	11B	
114S3308-15	77272	11B	
114S3308-3	77272	11B	
114S3308-91	77272	11B	
114S3311-1	77272	11B	
114S3311-75	77272	11B	
114S3314-1	77272	11B	
114S3314-27	77272	11B	
114S3353-1	77272	11B	
114S3353-3	77272	11B	
114S3353-41	77272	11B	
114S3353-43	77272	11B	

REFERENCE NUMBER	MFG CODE	FIG NUMBER	ITEM NUMBER	REFERENCE NUMBER	MFG CODE	FIG NUMBER	ITEM NUMBER
114S3353-45	77272	11B		114S3613-36	77272	11B	
114S3353-73	77272	11B		114S3613-37	77272	11B	
114S3354-2	77272	11B		114S3613-38	77272	11B	
114S3354-220	77272	11B		114S3613-39	77272	11B	63
114S3354-286	77272	11B		114S3613-41	77272	11B	65
114S3404-1	77272	11B		114S3613-43	77272	11B	64
114S3404-41	77272	11B		114S3613-7	77272	11B	
114S3404-48	77272	11B		114S3613-8	77272	11B	
114S3501-1	77272	11B		114S3614-1	77272	11B	
114S3501-199	77272	11B		114S3614-11	77272	11B	
114S3501-3	77272	11B		114S3614-15	77272	11B	
114S3501-375	77272	11B		114S3614-157	77272	11B	
114S3501-377	77272	11B		114S3614-161	77272	11B	
114S3501-7	77272	11B		114S3614-163	77272	11B	104
114S3501-9	77272	11B		114S3614-164	77272	11B	
114S3503-1	77272	11B		114S3614-165	77272	11B	
114S3506-1	77272	11B		114S3614-39	77272	11B	
114S3506-2	77272	11B		114S3614-40	77272	11B	
114S3506-25	77272	11B	62	114S3614-47	77272	11B	
114S3506-26	77272	11B	62	114S3614-55	77272	11B	
114S3507-1	77272	11B		114S3614-61	77272	11B	105
114S3507-3	77272	11B		114S3614-89	77272	11B	
114S3507-5	77272	11B		114S3615-1	77272	18	
114S3551-1	77272	10		114S3615-1	77272	11B	103
114S3551-1	77272	11B	66	114S3615-21	77272	18	166
114S3551-25	77272	10	32	114S3615-3	77272	18	161D
114S3551-33	77272	10		114S3615-35	77272	18	162
114S3601-10	77272	11B		114S3615-61	77272	18	
114S3601-7	77272	11B		114S3615-63	77272	18	
114S3601-8	77272	11B		114S3615-69	77272	18	167
114S3601-9	77272	11B		114S3615-7	77272	18	165C
114S3606-1	77272	11B		114S3615-9	77272	18	
114S3606-3	77272	11B		114S3621-1	77272	18	
114S3606-5	77272	11B	33	114S3621-1	77272	11B	23
114S3607-1	77272	11C		114S3621-15	77272	18	
114S3607-123	77272	11C	64A	114S3621-3	77272	18	132B
114S3607-129	77272	11C	64D	114S3640-1	77272	11B	
114S3607-139	77272	11C	65	114S3640-2	77272	11B	
114S3607-141	77272	11C	67	114S3702-10	77272	11B	75
114S3607-145	77272	11C	66	114S3702-5	77272	11B	73
114S3607-147	77272	11C	68	114S3702-7	77272	11B	74
114S3607-163	77272	11C	79	114S3702-9	77272	11B	75
114S3607-167	77272	11C	81	114S3703-1	77272	11B	20
114S3607-170	77272	11B	28	114S3703-11	77272	11B	106
114S3607-171	77272	11B		114S3703-13	77272	11B	107
114S3607-179	77272	11C	72	114S3703-15	77272	76	181
114S3607-180	77272	11C	73	114S3703-15	77272	11B	107
114S3607-181	77272	11C	74	114S3703-19	77272	11B	
114S3607-182	77272	11C	74A	114S3703-20	77272	11B	89
114S3607-183	77272	11C	75	114S3703-21	77272	11B	92
114S3607-184	77272	11C	75A	114S3703-22	77272	11B	90
114S3607-185	77272	11C	76	114S3703-23	77272	11B	91
114S3607-186	77272	11C	76A	114S3703-24	77272	11B	88A
114S3607-187	77272	11C	77	114S3703-7	77272	24	8
114S3607-188	77272	11C	77A	114S3703-9	77272	11C	29A
114S3607-189	77272	11C	78	114S3706-3	77272	11B	21
114S3607-29	77272	11B		114S3707-3	77272	11B	37
114S3607-3	77272	11B		114S3707-3	77272	KITS	
114S3607-45	77272	11B		114S3807-1	77272	11B	118
114S3607-55	77272	11C	69	114S3807-11	77272	11B	
114S3608-1	77272	11B		114S3807-12	77272	11B	
114S3608-2	77272	11B		114S3807-2	77272	11B	118
114S3608-27	77272	11B		114S3808-1	77272	11B	
114S3608-28	77272	11B		114S3808-11	77272	11B	
114S3611-19	77272	11B	25	114S3808-12	77272	11B	
114S3611-3	77272	11B		114S3808-15	77272	11B	
114S3611-33	77272	11B		114S3808-17	77272	11B	
114S3613-1	77272	11B		114S3812-11	77272	11B	
114S3613-31	77272	11B		114S3812-12	77272	11B	
114S3613-32	77272	11B		114S3812-13	77272	11B	69
114S3613-35	77272	11B		114S3812-17	77272	11B	

REFERENCE NUMBER	MFG CODE	FIG NUMBER	ITEM NUMBER
114S3812-20	77272	11B	67
114S3812-21	77272	11B	68
114S3812-22	77272	11B	
114S3814-1	77272	11B	18A
114S3814-2	77272	11B	18A
114S3815-1	77272	11B	77
114S3815-3	77272	11	1
114S3816-1	77272	11B	119
114S3816-11	77272	11B	
114S3816-12	77272	11B	
114S3816-2	77272	11B	119
114S3817-39	77272	11B	15
114S3817-41	77272	11B	16
114S3819-39	77272	11B	19
114S3819-41	77272	11B	19
114S3819-43	77272	11B	
114S3819-45	77272	11B	
114S3820-1	77272	11B	18B
114S3820-5	77272	11B	18B
114S3823-1	77272	11B	42
114S3823-3	77272	11B	42A
114S3823-5	77272	11B	27
114S3823-7	77272	11B	
114S3823-9	77272	11B	18
114S3825-13	77272	11B	
114S3825-15	77272	11B	
114S3825-17	77272	11B	
114S3825-19	77272	11B	120
114S3825-21	77272	11B	
114S3825-22	77272	11B	
114S3825-23	77272	11B	26
114S3825-24	77272	11B	26
114S3837-3	77272	11B	117
114S3837-4	77272	11B	117
114S3840-1	77272	11B	
114S3840-2	77272	11B	
114S3841-1	77272	11B	
114S3841-2	77272	11B	
114S3842-1	77272	11B	43
114S3842-2	77272	11B	43
114S3847-1	77272	11B	34
114S3847-3	77272	11B	34A
114S3848-5	77272	11B	42
114S3849-1	77272	11B	72
114S3849-15	77272	11B	72
114S3849-16	77272	11B	72
114S3849-17	77272	11B	
114S3849-18	77272	11B	
114S3849-2	77272	11B	72
114S3849-3	77272	11B	
114S3849-4	77272	11B	
114S3858-1	77272	11B	39B
114S3858-2	77272	11B	40B
114S3859-1	77272	11B	106A
114S3881-1	77272	11B	30
114S3882-1	77272	11B	13
114S3882-13	77272	11B	14
114S3883-1	77272	11B	11
114S3883-5	77272	11B	11
114S3901-1	77272	11B	
114S3901-25	77272	11B	
114S3901-27	77272	11B	
114S3901-29	77272	11B	
114S3901-31	77272	11B	
114S3901-33	77272	11B	48
114S3902-1	77272	11B	
114S3902-187	77272	11B	
114S3902-2	77272	11B	
114S3902-243	77272	11B	
114S3902-244	77272	11B	
114S3902-253	77272	11B	
114S3902-254	77272	11B	
114S3902-255	77272	11B	
114S3902-256	77272	11B	
114S3902-259	77272	11B	
114S3902-260	77272	11B	
114S3902-3	77272	11B	
114S3902-339	77272	11B	
114S3902-340	77272	11B	
114S3902-361	77272	11B	
114S3902-4	77272	11B	
114S3902-445	77272	11B	
114S3902-446	77272	11B	
114S3902-59	77272	11B	45
114S3903-1	77272	18	
114S3903-1	77272	11B	22
114S3903-11	77272	18	127
114S3903-15	77272	18	129
114S3903-17	77272	18	130
114S3903-21	77272	18	
114S3903-3	77272	18	
114S3903-5		18	
114S3904-1	77272	18	
114S3904-1	77272	11B	116
114S3904-17	77272	18	
114S3904-17	77272	18	138
114S3904-19	77272	18	
114S3904-19	77272	18	135
114S3904-23	77272	18	
114S3904-25	77272	18	
114S3904-3	77272	18	
114S3904-3	77272	11B	116
114S3904-5	77272	18	134
114S3904-5	77272	18	2
114S3904-50	77272	18	
114S3905-1	77272	18	
114S3905-1	77272	11B	
114S3905-23	77272	18	
114S3905-3	77272	18	156
114S3905-33	77272	18	155
114S3905-35	77272	18	159
114S3905-37	77272	18	158
114S3905-47	77272	18	
114S3905-49	77272	18	
114S3906-1	77272	32	
114S3906-1	77272	11B	47
114S3906-122	77272	32	24
114S3906-3	77272	32	24
114S3906-45	77272	32	
114S3906-46	77272	32	
114S3906-5	77272	32	24
114S3906-89	77272	32	24
114S3906-90	77272	32	24
114S3908-1	77272	11B	
114S3908-25	77272	11B	109
114S3908-26	77272	11B	109
114S3908-45	77272	11B	
114S3908-46	77272	11B	
114S3908-49	77272	11B	
114S3908-5	77272	11B	
114S3908-50	77272	11B	
114S3910-147	77272	32	2
114S3910-153	77272	32	
114S3910-153	77272	11B	46
114S3910-166	77272	32	12
114S3910-43	77272	32	3C
114S3910-44	77272	32	3C
114S3910-45	77272	32	1
114S3910-57	77272	32	17
114S3910-71	77272	32	1A
114S3910-72	77272	32	1A
114S3910-73	77272	32	7

REFERENCE NUMBER	MFG CODE	FIG NUMBER	ITEM NUMBER
114S3910-85	77272	32	
114S3910-85	77272	11B	46
114S3910-89	77272	32	1A
114S3910-90	77272	32	1A
114S3910-91	77272	32	3C
114S3910-92	77272	32	3C
114S3913-1	77272	11B	
114S3913-2	77272	11B	
114S3915-1	77272	33	
114S3915-1	77272	11B	44
114S3915-2	77272	33	
114S3915-2	77272	11B	44
114S3915-41	77272	33	54
114S3915-42	77272	33	54
114S3920-1	77272	32	
114S3920-1	77272	11B	46
114S3920-15	77272	32	13
114S3920-41	77272	32	3
114S3920-42	77272	32	3A
114S3920-43	77272	32	3B
114S3921-1	77272	11B	
114S3921-2	77272	11B	48
114S4101-1	77272	11C	
114S4101-19	77272	11C	4B
114S4101-37	77272	11C	2
114S4101-38	77272	11C	3
114S4101-89	77272	11C	1B
114S4101-91	77272	11C	4A
114S4101-92	77272	11C	4A
114S4101-93	77272	11C	2
114S4101-94	77272	11C	3
114S4104-1	77272	11C	
114S4104-3	77272	11C	5
114S4104-57	77272	11C	5
114S4106-1	77272	11C	
114S4106-26	77272	11C	9
114S4106-33	77272	11C	9
114S4107-1	77272	11C	
114S4107-3	77272	11C	11
114S4108-1	77272	11C	17
114S4108-3	77272	11C	
114S4109-1	77272	11C	
114S4109-24	77272	11C	19
114S4109-29	77272	11C	
114S4109-33	77272	11C	19
114S4110-1	77272	11C	
114S4110-3	77272	11C	
114S4111-13	77272	11C	
114S4111-35	77272	11C	21
114S4112-1	77272	11C	
114S4112-18	77272	11C	59
114S4112-19	77272	11C	
114S4112-21	77272	11C	60
114S4112-22	77272	11C	
114S4112-23	77272	11C	
114S4112-27	77272	11C	54
114S4112-3	77272	11C	
114S4112-31	77272	11C	52
114S4112-41	77272	11C	
114S4112-5	77272	11C	55
114S4112-6	77272	11C	56
114S4112-9	77272	11C	53
114S4113-1	77272	11C	
114S4117-1	77272	11C	
114S4117-135	77272	11C	
114S4117-137	77272	11C	
114S4117-21	77272	11C	1
114S4117-3	77272	11C	
114S4118-1	77272	11C	
114S4118-15	77272	11C	26B
114S4118-166	77272	11C	26D
114S4118-17	77272	11C	26C
114S4118-193	77272	11C	
114S4118-194	77272	11C	
114S4118-195	77272	11C	26
114S4118-196	77272	11C	26
114S4118-220	77272	11C	26E
114S4118-3	77272	11C	
114S4118-39	77272	11C	26A
114S4118-5	77272	11C	26
114S4118-7	77272	11C	26
114S4119-1	77272	11C	
114S4119-54	77272	11C	
114S4119-55	77272	11C	43
114S4119-60	77272	11C	44
114S4128-1	77272	11C	
114S4128-3	77272	11C	17
114S4129-1	77272	11C	
114S460-1	77272	221	107
114S4601-15	77272	18	
114S4601-15	77272	11C	
114S4601-17	77272	18	168
114S4601-25	77272	18	168
114S4601-9	77272	18	
114S4601-9	77272	11C	
114S4602-1	77272	18	
114S4602-1	77272	11C	
114S4602-11	77272	18	
114S4602-45	77272	18	149
114S4602-5	77272	18	
114S4602-55	77272	18	
114S4602-57	77272	18	147A
114S4602-59	77272	18	148
114S4602-7	77272	18	
114S4602-7	77272	11C	
114S4603-1	77272	18	
114S4603-1		11C	
114S4603-11	77272	18	
114S4603-15	77272	18	
114S4603-17	77272	18	
114S4603-21	77272	18	
114S4603-3	77272	18	153
114S4603-5	77272	18	
114S4603-5	77272	11C	
114S4603-7	77272	18	140
114S4604-1	77272	32	
114S4604-17	77272	32	
114S4604-2	77272	32	
114S4604-23	77272	32	66
114S4604-3	77272	32	59
114S4604-35	77272	32	
114S4604-37	77272	32	
114S4604-4	77272	32	59
114S4604-45	77272	32	
114S4604-46	77272	32	
114S4604-51	77272	32	59
114S4604-52	77272	32	59
114S4604-57	77272	32	
114S4604-59	77272	32	
114S4604-61	77272	32	
114S4604-63	77272	32	
114S4604-65	77272	32	
114S4604-7	77272	32	63
114S4604-73	77272	32	59
114S4604-74	77272	32	59
114S4605-1	77272	18	
114S4605-1	77272	11C	
114S4605-3	77272	18	154
114S4605-5	77272	18	
114S4606-1	77272	18	
114S4606-1	77272	11C	
114S4606-2	77272	18	177

REFERENCE NUMBER	MFG CODE	FIG NUMBER	ITEM NUMBER
114S4607-1	77272	18	
114S4607-1	77272	11C	
114S4607-2	77272	18	176
114S4609-59	77272	32	
114S4621-1	77272	11C	
114S4621-118	77272	11C	23
114S4621-5	77272	11C	24
114S4622-1	77272	11C	
114S4626-1	77272	11C	
114S4702-1	77272	11C	39
114S4702-1	77272	222	100
114S4702-1	77272	222	184
114S4702-10	77272	11C	39
114S4702-10	77272	222	100
114S4702-10	77272	222	184
114S4702-11	77272	11C	39
114S4702-5	77272	11C	40
114S4702-5	77272	222	170
114S4702-5	77272	222	63
114S4702-7	77272	11C	42
114S4702-9	77272	11C	39
114S4703-114	77272	11C	29B
114S4801-1	77272	11C	18
114S4801-1	77272	11C	4
114S4801-1	77272	11C	8
114S4802-1	77272	11C	12
114S4802-19	77272	11C	13
114S4802-21	77272	11C	13
114S4802-3	77272	11C	12
114S4802-5	77272	11C	6
114S4802-7	77272	11C	7
114S4803-1	77272	32	64
114S4803-2	77272	32	64
114S4803-3	77272	32	65
114S4803-4	77272	32	
114S4803-4	77272	32	65
114S4803-5	77272	32	
114S4803-6	77272	32	
114S4803-7	77272	32	
114S4803-8	77272	32	
114S4805-4	77272	11C	29
114S4810-1	77272	11C	10
114S4811-5	77272	11C	22
114S4823-1	77272	11C	62A
114S4824-1	77272	11C	30
114S4824-3	77272	11C	30A
114S4827-4	77272	11C	51A
114S4827-5	77272	11C	51A
114S4828-12	77272	11C	51
114S4828-2	77272	11C	50A
114S4828-8	77272	11C	50B
114S4830-1	77272	11C	10
114S4831-1	77272	11C	20
114S4832-3	77272	11C	27
114S4832-4	77272	11C	28
114S4835-2	77272	11C	20
114S4836-1	77272	11C	10
114S4901-1	77272	32	
114S4901-223	77272	32	28
114S4901-224	77272	32	29
114S4901-39	77272	32	31
114S4901-40	77272	32	31
114S4901-41	77272	32	
114S4901-55	77272	32	32
114S4901-56	77272	32	32
114S4901-83	77272	32	27A
114S4901-9	77272	32	42A
114S4901-91	77272	32	
114S4901-93	77272	32	
114S4901-95	77272	32	
114S4904-1	77272	32	
114S4904-111	77272	32	
114S4904-117	77272	32	47
114S4904-118	77272	32	50
114S4904-121	77272	32	
114S4904-127	77272	32	
114S4904-128	77272	32	
114S4904-13	77272	32	
114S4904-137	77272	32	
114S4904-143	77272	32	
114S4904-145	77272	32	48
114S4904-147	77272	32	51
114S4904-149	77272	32	
114S4904-15	77272	32	46
114S4904-150	77272	32	
114S4904-17	77272	32	
114S4904-19	77272	32	
114S4904-243	77272	32	49
114S4904-245	77272	32	
114S4904-249	77272	32	
114S4904-253	77272	32	
114S4904-259	77272	32	
114S4904-291	77272	32	
114S4904-293	77272	32	
114S4904-295	77272	32	
114S4904-301	77272	32	
114S4904-303	77272	32	
114S4904-351	77272	32	
114S4904-379	77272	32	49
114S4904-380	77272	32	
114S4904-381	77272	32	
114S4904-395	77272	32	45
114S4904-417	77272	32	53A
114S4904-419	77272	32	45
114S4904-456	77272	32	45
114S4904-470	77272	32	
114S4904-481	77272	32	
114S4904-484	77272	32	
114S4904-488	77272	32	
114S4904-489	77272	32	
114S4904-5	77272	32	
114S4904-87	77272	32	
114S4904-97	77272	32	
114S4905-1	77272	32	
114S4905-21	77272	32	
114S4905-33	77272	32	56
114S4905-34	77272	32	56
114S4905-5	77272	32	57
114S4906-1	77272	32	
114S4906-11	77272	32	
114S4906-13	77272	32	70
114S4906-25	77272	32	72
114S4906-27	77272	32	71
114S4906-3	77272	32	68
114S4906-69	77272	32	68
114S4907-1	77272	32	
114S4907-3	77272	32	73
114S4907-5	77272	32	75
114S4908-1	77272	32	
114S4909-1	77272	32	
114S4909-2	77272	32	69
114S4909-48	77272	32	69
114S4909-53	77272	32	69
114S4912-13	77272	32	77
114S4912-5	77272	32	
114S4912-7	77272	32	74
114S4914-1	77272	32	
114S4914-11	77272	32	66
114S4914-2	77272	32	
114S4914-3	77272	32	59
114S4914-4	77272	32	59
114S4914-5	77272	32	

REFERENCE NUMBER	MFG CODE	FIG NUMBER	ITEM NUMBER
114S4914-6	77272	32	
114S4915-1	77272	32	
114S4915-13	77272	32	45
114S5001-1	77272	13	
114S5001-1	77272	11A	92B
114S5001-11	77272	13	16A
114S5001-3	77272	13	
114S5001-3	77272	11A	92B
114S5001-5	77272	13	
114S5001-5	77272	11A	93
114S5001-7	77272	13	
114S5001-7	77272	11A	93
114S5001-9	77272	13	16A
114S5002-1	77272	13	
114S5002-1	77272	11A	95
114S5002-23	77272	13	40A
114S5002-25	77272	13	40A
114S5002-3	77272	13	
114S5002-3	77272	11A	95
114S5002-31	77272	13	40A
114S5002-32	77272	13	40A
114S5002-35	77272	13	
114S5002-35	77272	11A	95
114S5002-37	77272	13	
114S5002-37	77272	11A	95
114S5002-45	77272	13	
114S5002-45	77272	11A	95
114S5002-5	77272	13	40A
114S5002-50	77272	13	
114S5002-50	77272	11A	95
114S5002-53	77272	13	40A
114S5002-54	77272	13	40A
114S5002-56	77272	13	40A
114S5002-57	77272	13	40A
114S5002-63	77272	13	40A
114S5002-64	77272	13	40A
114S5002-68	77272	13	40A
114S5002-69	77272	13	40A
114S5002-7	77272	13	40A
114S5002-70	77272	13	16A
114S5002-71	77272	13	16A
114S5002-72	77272	13	16A
114S5002-73	77272	13	16A
114S5003-13	77272	13	
114S5003-13	77272	11B	112
114S5003-15	77272	13	
114S5003-15	77272	11B	112
114S5003-39	77272	13	
114S5003-39	77272	11A	96
114S5003-41	77272	13	
114S5003-41	77272	11A	96
114S5003-56	77272	13	67A
114S5003-57	77272	13	67A
114S5003-58	77272	13	94A
114S5003-59	77272	13	94A
114S5011-1	77272	13	
114S5011-1	77272	11A	92B
114S5011-2	77272	13	
114S5011-2	77272	11A	92B
114S5013-1	77272	13	
114S5013-1	77272	11A	96
114S5013-11	77272	13	67A
114S5013-12	77272	13	67A
114S5013-19	77272	13	67A
114S5013-20	77272	13	67A
114S5013-27	77272	13	67A
114S5013-28	77272	13	67A
114S5013-29	77272	13	67A
114S5013-3	77272	13	
114S5013-3	77272	11A	96
114S5013-30	77272	13	67A
114S5013-5	77272	13	67A
114S5013-7	77272	13	67A
114S5021-1	77272	13	
114S5021-1	77272	11A	93
114S5021-12	77272	18	
114S5021-17	77272	13	16A
114S5021-18	77272	13	16A
114S5021-28	77272	13	16A
114S5021-29	77272	13	16A
114S5021-3	77272	13	
114S5021-3	77272	11A	93
114S5021-39	77272	13	16A
114S5021-40	77272	13	16A
114S5021-43	77272	13	16A
114S5021-44	77272	13	16A
114S5021-45	77272	13	16A
114S5021-46	77272	13	16A
114S5021-5	77272	13	16A
114S5021-7	77272	13	16A
114S5023-1	77272	13	
114S5023-1	77272	11B	112
114S5023-2	77272	13	
114S5023-2	77272	11B	112
114S5023-3	77272	13	94A
114S5023-4	77272	13	94A
114S5303-1	77272	13	
114S5303-2	77272	13	
114S5303-5	77272	13	94C
114S5303-6	77272	13	94C
114S5511-1	77272	13	
114S5511-1	77272	18	
114S5511-3	77272	13	16B
114S5511-3	77272	18	
114S5512-1	77272	13	1
114S5512-1		18	
114S5512-23	77272	13	
114S5512-3	77272	13	
114S5520-1	77272	13	
114S5520-2	77272	13	
114S5520-31	77272	13	40B
114S5520-33	77272	13	40C
114S5520-34	77272	13	40C
114S5520-54	77272	13	
114S5520-55	77272	13	
114S5521-1	77272	13	
114S5521-1	77272	18	
114S5521-2	77272	13	
114S5521-2	77272	18	
114S5521-3	77272	13	
114S5521-3	77272	18	
114S5521-4	77272	13	
114S5521-4	77272	18	
114S5521-40	77272	18	
114S5521-41	77272	18	
114S5521-42	77272	13	67B
114S5521-43	77272	13	67B
114S5521-48	77272	13	
114S5521-48	77272	18	
114S5521-59	77272	13	
114S5521-59	77272	18	
114S5521-61	77272	13	
114S5521-61	77272	18	
114S5521-62	77272	13	
114S5521-62	77272	18	
114S5522-1	77272	13	2
114S5522-1	77272	18	
114S5522-2	77272	13	
114S5522-2	77272	18	
114S5530-101	77272	13	
114S5530-101	77272	18	
114S5530-103	77272	13	

REFERENCE NUMBER	MFG CODE	FIG NUMBER	ITEM NUMBER
114S5530-103	77272	18	
114S5530-105	77272	13	
114S5530-105	77272	18	
114S5530-106	77272	13	
114S5530-106	77272	18	
114S5531-1	77272	13	
114S5531-1	77272	18	
114S5531-2	77272	13	
114S5531-2	77272	18	
114S5551-1	77272	31	
114S5551-1	77272	118	113
114S5551-107	77272	31	27
114S5551-2	77272	31	
114S5551-2	77272	118	113
114S5551-209	77272	31	21
114S5551-211	77272	31	22
114S5551-212	77272	31	21
114S5551-213	77272	31	22
114S5551-3	77272	31	17B
114S5551-37	77272	31	18
114S5551-4	77272	31	17B
114S5551-85	77272	31	25E
114S5551-86	77272	31	25E
114S5551-87	77272	31	25E
114S5551-88	77272	31	25E
114S5551-89	77272	31	20D
114S5601-1	77272	18	
114S5601-11	77272	18	
114S5601-15	77272	18	
114S5601-17	77272	18	
114S5601-19	77272	18	24
114S5601-21	77272	18	
114S5601-3	77272	18	24
114S5602-13	77272	18	
114S5602-17	77272	18	
114S5602-19	77272	18	
114S5602-25	77272	18	
114S5602-27	77272	18	
114S5602-29	77272	18	
114S5602-3	77272	18	102
114S5602-3	77272	18	110
114S5602-3	77272	18	22
114S5602-32	77272	18	22
114S5602-33	77272	18	
114S5602-34	77272	18	
114S5602-5	77272	18	103
114S5602-5	77272	18	23
114S5602-7	77272	18	76
114S5612-1	77272	18	31A
114S5612-1	77272	18	81A
114S5612-12	77272	18	32
114S5612-12	77272	18	82
114S5612-19	77272	18	33
114S5612-19	77272	18	83
114S5612-2	77272	18	31B
114S5612-3	77272	18	35
114S5612-3	77272	18	85
114S5612-4	77272	18	36
114S5701-1	77272	13	35
114S5701-10	77272	13	7
114S5701-3	77272	13	66A
114S5701-5	77272	13	67
114S5701-5	77272	18	56
114S5701-7	77272	13	86
114S5701-7	77272	18	105
114S5701-9	77272	13	5
114S5701-9	77272	13	6
114S5707-1	77272	11A	
114S5707-16	77272	11A	107H
114S5707-19	77272	BULK	
114S5707-2	77272	11A	
114S5707-3	77272	11A	107B
114S5707-32	77272	11A	107C
114S5707-33	77272	11A	107A
114S5707-34	77272	11A	107D
114S5707-4	77272	11A	107B
114S5707-7	77272	11A	107E
114S5707-8	77272	11A	107F
114S5707-9	77272	11A	107G
114S5708-3	77272	11A	107J
114S5708-4	77272	11A	107J
114S5717-1	77272	18	
114S5717-10	77272	18	
114S5717-11	77272	18	
114S5717-12	77272	18	26
114S5717-12	77272	18	72
114S5717-13	77272	18	26
114S5717-13	77272	18	72
114S5717-2	77272	18	
114S5717-3	77272	18	
114S5717-4	77272	18	25
114S5717-4	77272	18	68
114S5717-5	77272	18	25
114S5717-5	77272	18	68
114S5717-8	77272	18	
114S5717-9	77272	18	
114S5807-3	77272	13	94E
114S5807-4	77272	13	94E
114S5808-1	77272	18	
114S5808-2	77272	18	
114S5809-2	77272	13	94D
114S5809-4	77272	13	
114S5810-1	77272	18	
114S5810-2	77272	18	
114S5816-1	77272	18	39
114S5816-1	77272	18	88
114S5816-2	77272	18	40
114S5816-2	77272	18	89
114S5823-1	77272	13	
114S5823-18	77272	13	44
114S5823-2	77272	13	
114S5823-20	77272	13	51
114S5823-21	77272	13	52
114S5823-22	77272	13	53
114S5823-23	77272	13	54
114S5823-24	77272	13	55
114S5823-3	77272	13	
114S5823-33	77272	13	41
114S5823-34	77272	13	48
114S5823-35	77272	13	49
114S5823-43	77272	13	
114S5823-44	77272	13	
114S5823-45	77272	13	
114S5823-46	77272	13	42
114S5823-47	77272	13	49A
114S5823-49	77272	13	55A
114S5823-57	77272	13	43
114S5823-58	77272	13	50
114S5823-62	77272	13	41
114S5824-1	77272	13	
114S5824-12	77272	13	24
114S5824-12	77272	13	75
114S5824-13	77272	13	25
114S5824-13	77272	13	76
114S5824-14	77272	13	26
114S5824-14	77272	13	77
114S5824-15	77272	13	19
114S5824-15	77272	13	70
114S5824-22	77272	13	33
114S5824-22	77272	13	63
114S5824-22	77272	13	84
114S5824-25	77272	13	

REFERENCE NUMBER	MFG CODE	FIG NUMBER	ITEM NUMBER
114S5824-28	77272	13	
114S5824-29	77272	13	23
114S5824-29	77272	13	74
114S5824-3	77272	13	23A
114S5824-3	77272	13	74A
114S5824-30	77272	13	17
114S5824-30	77272	13	68
114S5824-31	77272	13	
114S5824-49	77272	13	27
114S5824-49	77272	13	56
114S5824-49	77272	13	78
114S5824-55	77272	13	
114S5824-56	77272	13	
114S5824-57	77272	13	
114S5824-58	77272	13	
114S5824-59	77272	13	18
114S5824-59	77272	13	69
114S5824-62	77272	13	28
114S5824-62	77272	13	57
114S5824-62	77272	13	79
114S5901-1	77272	18	
114S5901-1	77272	11A	94
114S5901-10	77272	18	
114S5901-109	77272	18	
114S5901-111	77272	18	
114S5901-112	77272	18	
114S5901-113	77272	18	46
114S5901-114	77272	18	46
114S5901-115	77272	18	50
114S5901-116	77272	18	51
114S5901-119	77272	18	
114S5901-120	77272	18	
114S5901-122	77272	18	47
114S5901-123	77272	18	47
114S5901-128	77272	18	48
114S5901-129	77272	18	50
114S5901-130	77272	18	41
114S5901-131	77272	18	41
114S5901-132	77272	18	50
114S5901-133	77272	18	50
114S5901-148	77272	18	
114S5901-153	77272	18	43
114S5901-154	77272	18	43
114S5901-2	77272	18	
114S5901-2	77272	11A	94
114S5901-61	77272	18	
114S5901-65	77272	18	48
114S5901-66	77272	18	48
114S5901-67	77272	18	49
114S5901-69	77272	18	42
114S5901-7	77272	18	
114S5901-709	77272	18	46A
114S5901-71	77272	18	41
114S5901-710	77272	18	46A
114S5901-72	77272	18	41
114S5901-81	77272	18	52
114S5901-82	77272	18	53
114S5901-83	77272	18	45
114S5901-9	77272	18	
114S5901-91	77272	18	43
114S5901-92	77272	18	43
114S5902-1	77272	18	
114S5902-15	77272	18	11
114S5902-19	77272	18	142
114S5902-19	77272	18	150
114S5902-19	77272	18	8
114S5902-21	77272	18	143
114S5902-21	77272	18	15
114S5902-21	77272	18	152
114S5902-5	77272	18	5
114S5903-1	77272	18	
114S5903-17	77272	18	67
114S5903-29	77272	18	
114S5903-3	77272	18	65
114S5904-1	77272	18	18
114S5904-19	77272	18	
114S5904-2	77272	18	18
114S5904-21	77272	18	
114S5904-29	77272	18	
114S5904-3	77272	18	19
114S5904-31	77272	18	
114S5904-71	77272	18	18
114S5904-72	77272	18	18
114S5904-73	77272	18	19
114S5904-74	77272	18	19
114S5905-1	77272	18	
114S5905-1	77272	11B	115
114S5905-113	77272	18	115
114S5905-114	77272	18	115
114S5905-2	77272	18	
114S5905-2	77272	11B	115
114S5905-58	77272	18	
114S5905-76	77272	18	116
114S5905-77	77272	18	117
114S5905-97	77272	18	119
114S5906-1	77272	13	
114S5906-115	77272	13	16D
114S5906-2	77272	13	
114S5906-3	77272	13	16C
114S5906-4	77272	13	16C
114S5907-1	77272	18	
114S5907-1	77272	11B	114
114S5907-2	77272	18	
114S5907-2	77272	11B	114
114S5907-3	77272	18	120
114S5907-4	77272	18	120
114S5907-5	77272	18	123
114S5907-63	77272	18	122
114S5907-65	77272	18	124
114S5907-93	77272	18	
114S5907-95	77272	18	
114S5907-96	77272	18	
114S5909-1	77272	18	
114S5909-1	77272	11B	115
114S5909-2	77272	18	
114S5909-2	77272	11B	115
114S5909-57	77272	18	116
114S5909-58	77272	18	117
114S5909-59	77272	18	118
114S5909-65	77272	18	115
114S5909-66	77272	18	115
114S5909-75	77272	18	115
114S5909-76	77272	18	115
114S5910-1	77272	18	
114S5910-1	77272	11B	114
114S5910-114	77272	18	
114S5910-119	77272	18	120
114S5910-120	77272	18	120
114S5910-123	77272	18	120
114S5910-124	77272	18	120
114S5910-2	77272	18	
114S5910-2	77272	11B	114
114S5910-27	77272	18	
114S5910-28	77272	18	
114S5910-35	77272	18	
114S5912-1	77272	18	
114S5912-2	77272	18	6
114S5912-5	77272	18	12
114S5912-6	77272	18	9
114S5912-7	77272	18	16
114S5913-1	77272	18	
114S5913-2	77272	18	114A

REFERENCE NUMBER	MFG CODE	FIG NUMBER	ITEM NUMBER
114S5913-2	77272	18	63A
114S5913-8	77272	18	114
114S5913-8	77272	18	64
114S5914-1	77272	18	17
114S5914-2	77272	18	17
114S5915-21	77272	18	
114S5915-22	77272	18	
114S5915-39	77272	13	94B
114S5916-1	77272	13	
114S5916-2	77272	13	
114S5921-1	77272	18	
114S5921-1	77272	11A	95A
114S5921-2	77272	18	
114S5921-2	77272	11A	95A
114S5921-31	77272	18	60
114S5921-32	77272	18	60
114S5921-33	77272	18	59A
114S5921-34	77272	18	59A
114S5921-36	77272	18	
114S5921-43	77272	18	59A
114S5921-44	77272	18	59A
114S5921-5	77272	18	
114S5931-1	77272	18	
114S5931-1	77272	11B	112
114S5931-2	77272	18	
114S5931-2	77272	11B	112
114S5931-43	77272	18	109
114S5931-44	77272	18	109
114S5931-49	77272	18	108A
114S5931-50	77272	18	108A
114S6001-1	77272	21	
114S6001-12	77272	21	
114S6001-14	77272	21	
114S6001-15	77272	21	
114S6001-16	77272	21	
114S6001-17	77272	21	
114S6001-3	77272	21	
114S6001-7	77272	21	
114S6002-153	77272	21	
114S6002-154	77272	21	
114S6002-161	77272	21	
114S6002-175	77272	21	
114S6002-176	77272	21	
114S6002-182	77272	21	
114S6002-183	77272	21	
114S6002-184	77272	21	
114S6002-200	77272	21	27
114S6002-5	77272	21	
114S6002-68	77272	21	
114S6002-69	77272	21	
114S6002-77	77272	21	28
114S6002-89	77272	21	
114S6002-93	77272	21	
114S6003-1	77272	21	6
114S6003-15	77272	21	9
114S6003-21	77272	21	6
114S6003-3	77272	21	6
114S6104-1	77272	21	
114S6104-2	77272	21	
114S6104-23	77272	21	
114S6104-24	77272	21	
114S6106-1	77272	21	
114S6106-3	77272	21	75
114S6107-1	77272	21	
114S6107-3	77272	21	
114S6107-41	77272	21	
114S6107-42	77272	21	
114S6107-43	77272	21	
114S6109-1	77272	21	
114S6151-1	77272	21	
114S6151-111	77272	21	
114S6151-112	77272	21	
114S6151-123	77272	21	97H
114S6151-124	77272	21	97H
114S6151-2	77272	21	
114S6151-85	77272	21	97D
114S6151-87	77272	21	97C
114S6152-1	77272	21	
114S6152-2	77272	21	
114S6152-3	77272	21	93
114S6152-4	77272	21	94
114S6152-7	77272	21	
114S6154-1	77272	21	
114S6154-2	77272	21	
114S6154-39	77272	21	
114S6502-1	77272	21	
114S6503-1	77272	21	
114S6503-127	77272	21	
114S6503-128	77272	21	78
114S6503-3		21	78
114S6503-97	77272	21	78
114S6505-1	77272	21	
114S6505-2	77272	21	
114S6505-5	77272	21	
114S6505-6	77272	21	
114S6505-7	77272	21	
114S6505-8	77272	21	
114S6551-1	77272	10	
114S6551-1	77272	21	68
114S6551-7	77272	10	38
114S6552-1	77272	10	
114S6552-1	77272	21	67
114S6552-27	77272	10	42
114S6552-28	77272	10	42
114S6552-31	77272	10	
114S6552-31	77272	21	67A
114S6554-1	77272	10	
114S6554-1	77272	21	66
114S6554-11	77272	10	
114S6554-13	77272	10	
114S6554-15	77272	10	34
114S6554-17	77272	10	35
114S6554-19	77272	10	36
114S6554-21	77272	10	37
114S6554-5	77272	10	33
114S6601-1	77272	21	
114S6601-2	77272	21	
114S6601-21	77272	21	57
114S6601-29	77272	21	
114S6601-3	77272	21	
114S6601-30	77272	21	
114S6601-31	77272	21	
114S6601-32	77272	21	
114S6601-4	77272	21	
114S6601-47	77272	21	
114S6601-48	77272	21	
114S6601-49	77272	21	50B
114S6601-50	77272	21	50C
114S6603-1	77272	21	
114S6603-2	77272	21	
114S6604-1	77272	21	7
114S6605-46	77272	21	11
114S6606-1	77272	22	38A
114S6608-1	77272	21	
114S6608-29	77272	21	98
114S6608-31	77272	21	99
114S6608-33	77272	21	
114S6609-1	77272	21	
114S6609-1	77272	22	
114S6609-11	77272	22	31
114S6610-1	77272	21	
114S6610-12	77272	21	

REFERENCE NUMBER	MFG CODE	FIG NUMBER	ITEM NUMBER	REFERENCE NUMBER	MFG CODE	FIG NUMBER	ITEM NUMBER
114S6611-15	77272	21	92	114S6812-2	77272	22	
114S6611-17	77272	21	85	114S6813-1	77272	22	
114S6611-18	77272	21	86	114S6813-11	77272	22	16A
114S6611-19	77272	21	84	114S6813-12	77272	22	16A
114S6611-19	77272	21	91	114S6813-2	77272	22	
114S6611-29	77272	21	30	114S6814-15	77272	22	4A
114S6611-31	77272	21	29	114S6814-5	77272	22	
114S6611-43	77272	21		114S6815-1	77272	22	
114S6611-44	77272	21		114S6815-11	77272	22	23A
114S6611-45	77272	21		114S6816-15	77272	22	12C
114S6611-46	77272	21	90A	114S6817-1	77272	21	54A
114S6611-47	77272	21	83A	114S6817-11	77272	21	55
114S6611-48	77272	21	83B	114S6818-1	77272	21	61D
114S6611-49	77272	21	32	114S6818-11	77272	21	
114S6611-50	77272	21	35	114S6819-1	77272	21	56
114S6611-51	77272	21	33	114S6820-1	77272	22	19C
114S6611-52	77272	21	31	114S6820-1	77272	22	9C
114S6611-53	77272	21	36	114S6820-11	77272	22	
114S6611-54	77272	21	34	114S6820-13	77272	22	
114S6611-55	77272	21		114S6821-1	77272	21	76
114S6611-56	77272	21		114S6821-11	77272	21	
114S6611-57	77272	21		114S6822-5	77272	22	8
114S6612-1	77272	22	18	114S6822-7	77272	22	19
114S6612-11	77272	22	24	114S6822-7	77272	22	9
114S6612-2	77272	22	18	114S6823-1	77272	22	1
114S6613-1	77272	22	6E	114S6824-1	77272	22	
114S6613-2	77272	22	6E	114S6824-3	77272	22	
114S6701-19	77272	21		114S6824-5	77272	22	
114S6701-25	77272	21	25A	114S6824-7	77272	22	
114S6701-26	77272	21	16C	114S6825-1	77272	21	26A
114S6701-27	77272	21		114S6827-1	77272	22	34
114S6701-28	77272	21		114S6828-1	77272	21	
114S6701-29	77272	21		114S6901-1	77272	21	
114S6701-30	77272	21	26	114S6901-23	77272	21	
114S6701-31	77272	21	17	114S6901-25	77272	21	43
114S6701-32	77272	21	19	114S6901-3	77272	21	42
114S6701-33	77272	21	20	114S6901-5	77272	21	
114S6701-34	77272	21		114VS800-3	77272	189A	
114S6701-35	77272	21		114VS800-3	77272	190A	
114S6701-36	77272	21	21	114V8000-6	77272	189A	5
114S6701-37	77272	21	18	114V8000-7	77272	189A	3
114S6703-1		22		114V8000-8	77272	189A	4
114S6703-11	77272	22		114V8001-6	77272	189A	
114S6703-13	77272	22	30	114V8002-5	77272	189A	13
114S6703-3	77272	22	29	114V8002-7	77272	189A	36
114S6704-1	77272	22		114V8002-8	77272	189A	34
114S6706-1	77272	21		114V8010-7	77272	189A	38
114S6709-1	77272	21		114V8013-8	77272	189A	82
114S6709-2	77272	21		114V8014-5	77272	189	15
114S6710-1	77272	21	13B	114V8014-6	77272	188	
114S6711-1	77272	21		114V8014-6	77272	189	
114S6802-1	77272	21		114V8015-3	77272	189	10
114S6802-11	77272	21	97	114V8018-5	77272	189	19
114S6803-5	77272	21	69	114V8021-2	77272	428	
114S6804-1	77272	21	73	114V8021-2	77272	189A	
114S6804-2	77272	21	74	114X1011-1	77272	34	
114S6805-6	77272	21	14C	1141B29	82402	265	261
114S6806-1	77272	21	97A	1141B29	82402	268	187
114S6806-1	77272	21	97F	1141B31	82402	265	260
114S6806-2	77272	21	97B	1141B32	82402	265	215
114S6806-2	77272	21	97E	1141B35	82402	265	250
114S6807-1	77272	22		1141B37	82402	265	244
114S6807-11	77272	22	53	1141B37	82402	265	246
114S6807-18	77272	22	44	1141B37	82402	265	251
114S6807-3	77272	22		1141B37	82402	268	175
114S6808-3	77272	22	42A	1141B37	82402	268	192
114S6809-3	77272	22	43B	1141B37	82402	268	213
114S6810-3	77272	22	43	1141C61	82402	265	144
114S6812-1	77272	22		1141C61	82402	265	196
114S6812-11	77272	22	28A	1141C61	82402	268	168
114S6812-12	77272	22	28A	1141C61	82402	268	99

REFERENCE NUMBER	MFG CODE	FIG.	ITEM NO.
1146-1-6	99057	F19	12
114625	62983	67	48
115	12848	F24	
116-1008	95354	182A	32
116058	00502	137	5
11678	72914	197	24
11702	72914	197	60
11703	72914	197	14
11704	72914	197	61
11705	72914	197	53
11712	72914	197	20
11714	72914	197	49
11715	72914	197	59
11738	72914	197	46
11739	72914	197	58
11743	72914	197	15
11846-4	72914	197	52
118604	96124	150	1
118604-101	96124	150	
118604-102	96124	150	
118605	96124	150	21
118606	96124	150	20
118607	96124	150	17
118608	96124	150	19
118608-101	96124	150	
118608-102	96124	150	
118609	96124	150	15
118614	96124	150	16
118615	96124	150	11
118616	96124	150	9
118617	96124	150	10
118619	96124	150	4
118621	96124	150	2
118623	96124	150	12
118624	96124	150	14
118625	96124	150	13
118930-02-01	35351	158	37
118930-02-01	35351	158	34
119-18	71286	31	
11969		KITS	
11969	99643	132	12
11969	99643	146	17
11971	99643	132	4
11971	99643	146	10
11972-1	99643	132	7
11977		KITS	
11977	99643	132	15
11977	99643	146	21
11978	99643	132	13
11978	99643	146	19
11979		KITS	
11979	99643	132	18
11979	99643	146	23
11979	72914	197	
11982		KITS	
11982	99643	132	19
11982	99643	146	24
12030	89513	A30	6
12060		260	5
12062		KITS	
12LMCFM2-62	72962	183	19
12LMCFM2-82	72962	183	30
12NC4284-1-62	72962	204A	146
12Z12100-2	10001	BULK	
12Z2007-353	94135	265	159
12Z2007-353	94135	265	228
12Z2007-353	94135	265	26
12Z2007-353	94135	265	43
12Z2007-353	72962	268	154
12Z2007-353	72962	268	67
1200PRIMER	71984	MSUP	

REFERENCE NUMBER	MFG CODE	FIG.	ITEM NO.
121-11646	86579	247	16
1212239-1	19315	68	13
1226	20175	F1	15
1228	03914	F1	16
1232	03914	F1	17
1236-1-6	99057	11	133D
1240	73038	F1	18
124074	62983	266	28
124123	62983	266	34
124220	62983	266	31
12424		KITS	
12424	99643	272	21
12426	99643	272	20
12427		KITS	
12427	99643	272	17
12428	99643	272	16
12431		KITS	
12431	99643	272	13
124320	62983	266	33
1244	73038	F1	19
124682-4S10-6	18355	32	58C
1248	03914	F1	20
125-1-5		KITS	
125001	92555	74	82
1252	73038	F1	21
12550P24	71785	183A	39
1258	03914	F1	22
1259		KITS	
1261915-109	19315	204A	160
1261915-162	19315	204A	100
1261915-162	19315	204A	163
1261915-198	19315	204A	132
1261915-199	19315	204A	133
1262	20175	F1	23
12629		KITS	
12631	99643	272	15
1264	03914	F1	24
126701-2	70951	251	12
126701-2	70951	252	
1268	03914	F1	25
127-100282-01	73949	205	37
1270	03914	F1	26
12703	99643	224	26
12703	99643	224	31
1272	73038	F1	27
12764	88379	126	10
12764	88379	128	23
12765	88379	128	
12766	88379	128	
12770	35609	126	1
12770	35609	128	14
12771	35609	126	1
12771	35609	128	14
12773	88379	128	
12782	88379	128	6
12789	88379	126	10
12789	88379	128	23
12797	35609	128	30
12800	72914	190	92
12805	88379	128	46
12809	88379	128	31
12818	88379	128	46
12828-1	35609	128	28
12828-2	88379	128	28
12832		126	1A
12832		128	18
12832		KITS	
12852		126	1A
12852		128	18
12852		KITS	
128978	62983	138	42

REFERENCE NUMBER	MFG CODE	FIG NUMBER	ITEM NUMBER
12907	35609	128	9
12908	88379	128	9
12909	88379	128	4
1291137-1	19315	68	52
1291137-1	19315	183A	54
12913	88379	128	5
12921	35609	128	
12922	35609	126	5
12922	35609	128	25
12923	35609	126	6
12923	35609	128	
12925	35609	126	6
12925	35609	128	
12927	35609	128	40
129414	62983	266	29
13-047200	31435	83	35Q
13C73	89513	260	59
13C83	58588	260	43
13C86	58588	260	45
13C87	58588	260	44
13C88	89513	260	42A
13C92	89513	260	64
13C99	89513	260	54
13VC0CM	92555	74	85
130053	62983	266	40
130089	62983	266	39
13014	05167	258A	13
13026	80099	258A	12
13028	05167	258A	10
13032-1-1894	00671	94	1
13032-1-1894	00671	94	5
13034	05167	258A	6
13038	05167	258A	8
13051	05167	258A	9
13059	12848	258A	5
13059-2	05167	258A	5
13083-5	05167	258	12A
13083-5	05167	258A	1
13088	05167	258A	15
131176	62983	154	
131177	62983	154	14
13146	05167	258A	3
13183	35609	128	42
1319	87187	MSUP	
1332-300	11871	75	79
1332-300-2	11871	75	79
1332-300-2	11871	75	83
13394	88379	128	41
13447	35609	128	10
13449	35609	128	38
13453	88379	128	32
13456	35609	128	36
13458		KITS	
13458	99643	132	10
13458	99643	146	15
135M9	99866	A6	
135001	92555	74	82
13540-3	81996	287	
1356-643888	09523	119	393
1357-33C	89944	170	59
1357-33C	89944	171	61
1357-37	89944	170	56
1357-37	89944	171	57
1357-38	89944	170	55
1357-38	89944	171	58
1357-90182	89944	171	41
1357-90182	89944	171	55
1357-903B	89944	170	75
1357-903B	89944	171	56
1357-915C	89944	170	62
13586		KITS	
13586	99643	272	14
135930	73168	QC1	169
135930	73168	259	13
13684-1	99643	111	1
13749	88379	128	24
138100	62983	154	
138181	62983	154	12
1382988-2	75477	94	9
13836	60038	56	3
13889	60038	56	2
13889-13830	60038	BULK	
13889-13836	60038	56	
139772	62983	266	1A
139925	62983	266	9
14C03	58588	260	49
14C09	89513	260	38A
14C17	89513	260	4
14C18	58588	260	8
14C19	85913	260	19
14C19	89513	260	27
14C20	89513	260	21
14C20	89513	260	37
14C23		260	6
14C23		KITS	
14P1	82146	MSUP	
1406-55SQ	95238	BULK	
1406H90	95238	BULK	
1407873	82402	265	123
1407873	82402	268	129
1414-12	89944	170	85
1414-12	89944	171	73
141497	62983	154	34
1419-101	97896	202	
1419-115	97896	202	
1419-116	97896	202	
1419-118	97896	202	36
14288	99643	120	22
14289	99643	120	12
14292	99643	120	16
14295	99643	120	4
143P1003-1	77272	213	
143P1003-3	77272	213	
143P1005-1	77272	213	
143P1005-2	77272	213	
143S1037-3	77272	251	61
14301	99643	120	2
14302	99643	120	15
14302		KITS	
14303	99643	120	14
14303		KITS	
14304	99643	120	11
14304		KITS	
14305	99643	120	10
14305		KITS	
14306	99643	120	9
14307	99643	120	8
14307		KITS	
14308	99643	120	5
14308		KITS	
14309	99643	120	7
14309		KITS	
14311	99643	120	21
14311		KITS	
14339	99643	121	26
14341	99643	121	12
14341		KITS	
14342	99643	121	9
14343	99643	121	11
14343		KITS	
14344	99643	121	7
14344		KITS	

REFERENCE NUMBER	MFG CODE	FIG NUMBER	ITEM NUMBER
14345	99643	121	18
14346	99643	121	1
14346		KITS	
14347	99643	121	16
14348	99643	121	20
14348		KITS	
14349	99643	121	24
14353	99643	121	3
14354	99643	121	6
14355	99643	121	5
14355		KITS	
14356	99643	121	8
14360	88379	128	
14361	88379	128	
14385	35609	128	
14432	99643	224	43
14433	99643	224	44
14434	99643	224	42
14435	99643	224	36
14437	99643	224	35
14442	99643	224	29
14444	99643	224	11
14445	99643	224	10
14448	99643	224	18
14509	99643	122	1
14509		KITS	
14511	99643	122	53
14512		KITS	
14512	99643	122	48
14513		KITS	
14513	99643	122	19
14513	99643	122	35
14513	99643	130	23
14514		KITS	
14514	99643	122	32
14514	99643	130	20
14515		KITS	
14515	99643	122	14
14516	99643	122	5
14517	99643	122	12
14518	99643	122	52
14519	99643	122	50
14521	99643	122	45
14521	99643	130	30
14522		122	49
14522		KITS	
14523		122	13
14523		KITS	
14524		122	22
14524		122	38
14524		130	25
14524		KITS	
14525		122	29
14525		KITS	
14526	99643	122	30
14526	99643	130	18
14527	99643	122	10
14528	99643	122	39
14528	99643	130	26
14529	99643	122	20
14529	99643	122	36
14529	99643	130	24
14531	99643	122	23
14532	99643	122	27
14547		122	26
14547		122	42
14547		KITS	
14548		122	15
14548		KITS	
146-200047-01	73949	225	27
1468-1-8	99057	F19	10

REFERENCE NUMBER	MFG CODE	FIG NUMBER	ITEM NUMBER
14681	99643	272	3
14694	99643	272	61
14697	99643	272	10
14697-1	99643	272	10
14767	99643	224	34
14826	99643	272	58
14832	99643	272	51
14839-1	99643	272	60
14841	99643	272	59
14843	99643	272	25
14844	99643	272	33
14845		KITS	
14845	99643	272	26
14846		KITS	
14846	99643	272	32
14847	99643	272	2
14847		KITS	
14848-1		KITS	
14849		KITS	
14849	99643	272	42
14851		KITS	
14851	99643	272	5
14852		KITS	
14852	99643	272	27
148529	62983	63	124
148696	62983	67	39
148790	62983	266	5
1489048-1	02987	A55	
1489406-1	02987	A31	3
1490288-0002	02987	157	
1490288-0002	02987	158	
1492046-0001	02987	157	
1492046-0001	02987	158	
1492513-0001	02987	157	
1492513-0001	02987	158	
1493202-0001	02987	157	
1493202-0001	02987	158	
1496749-0001	02987	188	68
1497638-0003	77820	188	66
150D106X0010B2	56289	173	35
150D107X0020S2	56289	204A	26
150D226X9060S2	56289	204A	27
150D226X9060S2	56289	204A	90
150D475X0035B2	56289	169	19
150D475X0035B2	56289	173	21
15005-352T3	44655	201	107
15052-352T2	44655	201	105
15052-352T2	44655	201	31
15052-352T3	44655	201	32
15052-352T3	44655	201	69
151D115X0020W2	56289	204A	80
15101	11346	222	
151125	62983	154	11
151548	62983	63	94
152-000128-00	73949	205	16
152-31101	00543	119	
152B4	35918	167	30
152B55	35918	167	30
152105	62983	266	38
152963	62983	266	41
1544	75297	BULK	
154558	62983	138	51
1547	90166	65	25
15504B		KITS	
15504B	73760	216	15
15505D		KITS	
15505D	73760	216	16
15506B		KITS	
15506B	73760	216	13
15507C		KITS	
15507C	73760	216	14

REFERENCE NUMBER	MFG CODE	FIG NUMBER	ITEM NUMBER
15508B	73760	216	10
15510AC	73760	216	12
15510R	73760	216	12
15511BA		KITS	
15511BA	73760	216	2
15512FM3-17	73760	216	21
15512FM3-47	73760	216	21
155317	62983	154	
155317	62983	266	
15543A		KITS	
15543A	73760	216	47
15543A	73760	216	50
15544H		KITS	
15546	72914	190	
15549A		KITS	
15549A	73760	216	4
15561D		KITS	
15561D	73760	216	1
15562E		KITS	
15562E	73760	216	5
15567	72914	190	
15568	72914	190	154
15585	72914	190	8
15594M	73760	216	33
15594M		KITS	
1560CH47-199-3	81996	11C	20A
1560CH47-206-3	81996	11	61E
1560CH47-214-4	81996	BULK	
1560CH47-217-11	81996	255	
1560CH47-217-5	81996	255	27
1560CH47-217-6	81996	255	27
1560CH47-217-7	81996	255	26
1560CH47-217-9	81996	255	25
1560CH47-218-3	81996	28	38A
1560CH47-220-1	81996	KITS	
1560CH47-225-101	81996	281	
1560CH47-225-102	81996	281	
1560CH47-226-101	81996	281	16
1560CH47-226-102	81996	281	17
1560CH47-227-101	81996	281	
1560CH47-227-102	81996	281	
1560CH47-228-101	81996	281	
1560CH47-230-101	81996	281	1
1560CH47-230-102	81996	281	2
1560CH47-231-101	81996	281	
1560CH47-232-101	81996	281	
1560CH47-232-102	81996	281	
1560CH47-232-103	81996	281	
1560CH47-232-104	81996	281	
1560CH47-234-102	81996	281	3
1560CH47-267-101	81996	281	13
1560CH47-267-102	81996	281	13
1560CH47-267-103	81996	281	
1560CH47-267-103	81996	282	14
1560CH47-267-104	81996	281	
1560CH47-267-104	81996	282	15
1560CH47-270-101	81996	281	7
1560CH47-270-102	81996	281	8
1560CH47-277-101	81996	281	4
1560CH47-277-103	81996	281	4
1560CH47-277-103	81996	282	13
1560CH47-277-104	81996	281	4
1560CH47-277-104	81996	282	11
1560CH47-287-1	81996	281	
1560CH47-288-101	81996	281	
1560CH47-288-101	81996	282	10
1560CH47-288-103	81996	282	9
1560CH47-301-1	81996	282	17
1560CH47-302-1	81996	282	16
1560CH47-303-1	81996	282	1
1560CH47-304-1	81996	282	23
1560CH47-305-1	81996	282	18
1560CH47-306-1	81996	282	19
1560CH47-306-2	81996	282	20
1560CH47-307-1	81996	282	4
1560CH47-310-101	81996	282	5
1560CH47-310-102	81996	282	8
1560CH47-360-3	81996	119	218
1560CH47-360-3	81996	119	86
1560CH47-360-5	81996	119	221
1560CH47-360-7	81996	119	231
1560CH47-365-1	81996	283	
1560CH47-365-3	81996	283	
1560CH47-365-4	81996	283	
1560CH47-365-5	81996	283	
1560CH47-385-11	81996	275	
1560CH47-386-2	81996	KITS	
1560CH47-387-4	81996	A1	3
1560CH47-395-1	81996	251	
1560CH47-396-1	81996	KITS	
1560CH47-398-1	81996	F3	1
1560CH47-400-1	81996	21	6A
1560CH47-402-2	81996	118	
1560CH47-403-1	81996	A8	11
1560CH47-409-1	81996	KITS	
1560CH47-414-1	81996	71	
1560CH47-414-1	81996	KITS	
1560CH47-559-1	81996	281	
1560CH47203-3	81996	280	11
1560CH47203-4	81996	280	8
1560CH47203-5	81996	280	10
1560CH47203-6	81996	280	7
1560CH47203-7	81996	280	12
1560CH47203-8	81996	280	4
1560EG006	81996	MSUP	
156001	92555	102	37A
156001	92555	103	
156001	92555	124	
156002	92555	102	37A
156002	92555	102	37E
15603A	73760	216	52
15605B	73760	216	54
15607A		216	61
15607A		KITS	
15607BK	73760	216	61
15607BL	73760	216	61
15607D	73760	216	8A
15607E	73760	216	8A
15609J	73760	216	56
15610A		KITS	
15610A	73760	216	44
156101	92555	49	26B
156101	92555	57	22
156101	92555	73	28B
156101	92555	124	
156102	92555	272	23
156102	92555	272	56
1562-38IN	88730	BULK	
15645A		KITS	
15645A	73760	216	24
15692-67	72914	182A	19A
157-1-7A	99057	78	45
15715A		KITS	
15715A	73760	216	72
15716A		KITS	
15716A	73760	216	25
15716B		KITS	
15716C		KITS	
15716C	73760	216	25
15716D		KITS	
15716D	73760	216	25
15716E		KITS	

REFERENCE NUMBER	MFG CODE	FIG NUMBER	ITEM NUMBER
15716E	73760	216	25
1576B	73760	216	25
158-9	11244	BULK	
15803	99643	272	36
15804	99643	272	39
15805	99643	272	38
158250	62983	63	130
159184	62983	266	43
159185	62983	266	47
1599C133	82402	265	109
1599C133	82402	268	111
16022A	89513	262C	8
1604-178	65301	165	1
1607144-1	99251	165	82
16092W	73760	216	88
161-000305-00	73949	226	50
16108	95879	F18	
161017	62983	266	7
161312	62983	266	
161347	62983	63	88
161347	62983	267	34
16149A	73760	216	57
16151A		KITS	
16151A	73760	216	62
16151BS	73760	216	62
161570	62983	266	8
16292	99643	130	
16316	99643	132	41
16317		KITS	
16317	99643	132	17
16317	99643	146	22
16318		132	40
16318		KITS	
16319		KITS	
16319	99643	132	27
16319	99643	146	32
1632K2	82831	A54	
16321		132	33
16321		KITS	
16322	99643	132	37
16323	99643	132	24
16324	99643	132	28
16325	99643	132	34
16326	99643	132	29
16327	99643	132	20
16329		132	6
16329		KITS	
1639C60	82402	265	110
1639C60	82402	268	114
1639C61	82402	265	113
1639C61	82402	268	117
1639C62	82402	265	108
1639C62	82402	268	110
164129	62983	BULK	
164130	62983	149	
164131	62983	BULK	
1644A	89896	44	
164432	62983	63	90
164432	62983	138	29
164432	62983	149	65
164432	62983	154	43
164432	62983	266	20
164432	62983	267	31
164432	62983	274	37
164886	62983	138	5
164929	62983	154	41
164929	62983	266	18
165265	62983	67	29
16532A		216	70
16532A		KITS	
16532F		KITS	
16532G		216	70
16532G		KITS	
16532H	73760	216	70A
16535A		KITS	
16535A	73760	216	77
16536C		KITS	
16536C	73760	216	76
16537A	73760	216	79
165385	62983	149	27
16539B		KITS	
16539B	73760	216	71
16541A	73760	216	70C
16542A		KITS	
16542A	73760	216	65
16597	99643	146	3
16606A23-101	73760	216	11A
16606A23-109		KITS	
16606A23-109	73760	216	3
16612	99643	146	28
16615	99643	146	4
16616	99643	146	12
16667	62983	149	16
16667	62983	149	29
16667	62983	274	48
1679B103	82402	265	188
1679B103	82402	268	228
168361	62983	267	12
16844A		KITS	
16844A	73760	216	28
16844A	73760	216	33F
16848BA		KITS	
16848BA	73760	216	53
16848BB		KITS	
16848BB	73760	216	53
16848BC		KITS	
16848BC	73760	216	53
16848BD		KITS	
16848BD	73760	216	53
16848BE		KITS	
16848BE	73760	216	53
16925	99643	146	2A
16926	99643	146	25
169774	62983	267	14
17R1-2AA	77272	18	
17S4-6AA	71286	18	112
17S4-6AA	71286	18	62
1711B	83448	75	148
1711B	83448	75	162
1711B	83448	75	194
1712B68	82402	265	203
1712B68	82402	268	224
17188		130	14
17188		KITS	
17189		132	1
17189		KITS	
17246		KITS	
17247		KITS	
17300	12848	258	12
17301	12848	258	12
17421	99643	122	
17421	99643	KITS	
17424	99643	272	
17424	99643	KITS	
17425	99643	272	
17425	99643	KITS	
17431	99643	120	
17431	99643	KITS	
17437	99643	121	
17437	99643	KITS	
17438	99643	132	
17438	99643	KITS	

REFERENCE NUMBER	MFG CODE	FIG NUMBER	ITEM NUMBER
17439	99643	132	
17439	99643	KITS	
17441	99643	122	
17441	99643	KITS	
17577	99643	224	28
17581	99643	224	40
17583	99643	224	21
17584	99643	224	22
17586	99643	224	24
17610	72914	197	41
176420	62983	154	27
17662	99643	224	47A
177181	62983	266	1
17726		130	6
17726		KITS	
17727-1	99643	130	3
17728		130	2
17728		KITS	
17729		130	5
17729		KITS	
1773169-2	19315	68	35
17734	99643	224	39
17735	99643	224	
17736	99643	224	
17743	99643	224	25
17747-3		KITS	
17749		130	8
17749		KITS	
1776	20209	157	45
1778551-2	19315	204A	4
1781	53655	60	45
1781	53655	61	47
17819	99643	111	16
17821	99643	111	12
17822	99643	111	7
17823	99643	111	8
17824	99643	111	4
17825	99643	111	15
17826	99643	111	6
1783755-615	56232	157	34
1783867-1	56232	182	33
178682	62983	266	32
178683	62983	266	37
1786950-6	19315	204A	175
1790044-9	19315	204A	125
1791712-6	19315	183A	63
1792	20209	157	45
179275	62983	267	40
1793841	82402	265	307
1793841	82402	268	268
17943	99643	146	9A
1796741-22	19315	68	85
1796743-50	19315	68	23
1796743-6	19315	68	51
1796743-6	19315	183A	53
1796746-83	19315	183A	61
17973	99643	146	33
17974	99643	146	31
17975	99643	146	16
18-1704	96774	117	77
18-1704	96774	129	137
18-1704	96774	129	56
18C29		262	27A
18C29		KITS	
180-66344F0124	00624	93	24
1800	53655	60	46
1800	53655	61	48
1804774-1	19315	204A	143
1804774-9	19315	204A	142
1806-1400	96264	184	33
1806-1600	96264	184	34

REFERENCE NUMBER	MFG CODE	FIG NUMBER	ITEM NUMBER
1807381-15	19315	68	63
181-000318-01	73949	205	14
1813564-11	19315	204A	118
18144	99643	111	9
18145	99643	111	5
1814789-30	19315	68	6
1814789-31	19315	68	6
1814789-32	19315	68	6
1814789-33	19315	68	6
1814789-34	19315	68	6
1814789-35	19315	68	6
1814789-37	19315	68	6
1814789-38	19315	68	6
1814789-39	19315	68	6
1814789-40	19315	68	6
1814789-47	19315	68	8
1814789-48	19315	68	6
1814789-49	19315	68	6
1814789-51	19315	68	6
1814789-52	19315	68	6
1814789-53	19315	68	6
1814789-54	19315	68	6
1814789-55	19315	68	6
1814789-56	19315	68	6
1814789-58	19315	68	6
1814789-59	19315	68	6
1814789-60	19315	68	6
1814789-61	19315	68	6
1814789-62	19315	68	6
1814789-63	19315	68	6
1814789-64	19315	68	6
1814789-65	19315	68	6
1814789-66	19315	68	6
1814789-67	19315	68	6
1814789-68	19315	68	6
1814789-69	19315	68	6
1814789-70	19315	68	6
1814789-71	19315	68	6
1814789-72	19315	68	6
1814789-73	19315	68	6
181829	62983	154	7
1823725-169	19315	204A	41
1838323-12	19315	204A	33
18422-0-350	73168	251	45
1842985-43	19315	204A	37
1845-15	89944	170	45
1845-15	89944	171	45
1845-24	89944	170	21
1845-24	89944	171	23
1845-904	89944	171	30A
1845-905	89944	171	39
1845X4-03	89944	157	57
1845X4-03	89944	158	52
1845X4-03D	89944	157	57
1845X4-03D	89944	158	52
1846-3	89944	170	51
1846-3	89944	171	51
184789-36	19315	68	6
185068	36536	204	33A
185069	36536	204	33B
185610	62983	138	49
1860104-118	19315	204A	40
1860104-127	19315	204A	59
1860104-151	19315	204A	67
1860104-158	19315	204A	58
1860104-81	19315	204A	83
1860104-94	19315	204A	60
1860109-1	19315	204A	107
186014	62983	266	42
1861531-2	19315	183A	72
1861531-2	19315	204A	114

REFERENCE NUMBER	MFG CODE	FIG NUMBER	ITEM NUMBER
1861531-2	19315	204A	139
1861531-2	19315	204A	173
1862	53655	60	40
1862	53655	61	42
1863	53655	60	41
1863	53655	61	43
18643	99643	130	11
18646		KITS	
1866-60-102	83330	F22	
1866-60-103	83330	F22	
1867453-1	19315	204A	140
187CKF005	92555	74	46
187CKR005	92555	102	
187CKR005	92555	102	37H
187CKR005	92555	103	
18700	12848	258	8
187101	92555	74	84
1871755-2	19315	204A	101
1871755-2	19315	204A	164
1878286-1	19315	204A	113
1879851-1	19315	68	5
18804774-7	19315	204A	144
18834	99643	130	
18834	99643	KITS	
18835	99643	130	
18835	99643	KITS	
18850	99643	112	19
1890	90166	65	14
1890	90166	65	2
1890	90166	65	5
189395	62983	266	
1895824-2	19315	204A	117
1895824-2	19315	204A	97
19-41	36922	157	45
19C241	56289	169	51
19C241	56289	173	15
19C241	56289	173	48
190-15	89944	170	69
190-15	89944	170	81
190-15	89944	170	96
190-15	89944	171	65
190-15	89944	171	70
190-15	89944	171	75
1904S	38443	265	290
1904S	38443	265	292
1904S	38443	265	91
1904S	38443	265	93
1904S	38443	268	21
1904S	38443	268	252
1906R	38443	134	10
1907092-10	19315	204A	141
1907393-1	19315	204A	61
1907394-1	19315	204A	68
1907644-2	19315	204A	112
1907644-2	19315	204A	174
19077A	89513	262C	5
1907992-1	19315	204A	
1907992-1	19315	204A	167
191326	53021	192	8
1915476-4	19315	204A	111
1915660-1	19315	204A	131
1915944-1	19315	204A	136
191621	62983	266	10
1916572-1	19315	183A	65
1916919-1	19315	68	31
1916919-2	19315	68	31
1916919-3	19315	68	31
1916919-4	19315	68	31
1921436-5	19315	183A	64
1925868-1	19315	68	66
1925883-1	19315	183A	60
1932	20175	F1	3
19338A		216	55
19338A		KITS	
1936	20175	F1	4
1936131-1	19315	68	77
1936132-1	19315	68	4
1936133-1	19315	68	36
1936134-1	19315	68	30
1936137-1	19315	68	47
1936138-1	19315	68	46
1936140-1	19315	68	48
1936142-1	19315	68	50
1936144-1	19315	68	53
1936148-1	19315	68	80
1936149-1	19315	68	78
1936149-2	19315	68	84
1936150-1	19315	68	86
1936150-2	19315	68	86
1936150-3	19315	68	86
1936150-4	19315	68	86
1936152-1	19315	68	55
1936153-1	19315	68	79
1936155-1	19315	68	81
1936155-2	19315	68	81
1936155-3	19315	68	81
1936155-4	19315	68	81
1936159-1	19315	68	74
1936161-1	19315	68	76
1936161-2	19315	68	76
1936161-3	19315	68	76
1936161-4	19315	68	76
1936163-1	19315	68	45
1936163-1	19315	68	75
1936163-2	19315	68	45
1936163-2	19315	68	75
1936163-3	19315	68	45
1936163-3	19315	68	75
1936172-1	19315	68	34
1936173-4	19315	68	2
1936174-1	19315	68	3
1936459-1	19315	183A	24
1936460-1	19315	183A	55
1936469-1	19315	183A	83
1936477-1	19315	183A	48
1936478-1	19315	183A	20
1936479-1	19315	183A	19
1936480-1	19315	183A	13
1936482-1	19315	183A	
1936484-1	19315	183A	11
1936486-1	19315	183A	44
1936487-1	19315	183A	8
1936488-1	19315	183A	37
1936489-1	19315	183A	38
1936492-1	19315	183A	45
1936493-1	19315	183A	43
1936817-1	19315	68	61
1936821-1	19315	68	62
1936822-1	19315	68	59
1936824-1	19315	68	49
1936825-1	19315	68	26
1936834-1	19315	68	15
1936840-1	19315	68	20
1936850-1	19315	68	25
1936851-1	19315	68	69
1936854-1	19315	68	70
1936862-1	19315	68	33
1936995-1	19315	183A	81
1936996-1	19315	183A	80
1936997-1	19315	183A	73
1936998-1	19315	204A	123
1937011-1	19315	183A	52

REFERENCE NUMBER	MFG CODE	FIG NUMBER	ITEM NUMBER
1937023-1	19315	183A	21
1937049-1	19315	204A	134
1937345-3	19315	183A	10
1937353-1	19315	204A	3
1940	20175	F1	5
1940051	94988	210	41
1940052	94988	210	25
1940056	94988	210	46
1944	20175	F1	6
194645	62983	267	54
1948	20175	F1	7
19490-1	55820	BULK	
1952	20175	F1	8
195259	62983	267	49
1954	76786	36	30
195545	62983	149	32
1958	20175	F1	9
1958410-1	19315	183A	14
1958524-1	19315	183A	59
1958524-2	19315	183A	59
1959358-1	19315	204A	120
1959359-1	19315	204A	121
196168	62983	149	52
196170	62983	138	2
1962	20175	F1	10
1963563-1	19315	204A	24
1963566-1	19315	204A	115
1963567	19315	204A	
1963597-1	19315	68	38
1963598-1	19315	68	71
1963600-1	19315	68	87
1963604-1	19315	68	27
1964	20175	F1	11
1964414-1	19315	204A	16
1964415-1	19315	204A	147
1967030-6	19315	183A	40
1967494-1	19315	204A	14
1967520-1	19315	68	83
1967672-1	19315	183A	29
1967674-1	19315	183A	36
1967758-1	19315	68	65
1967886-1	19315	68	64
1967951-1	19315	204A	2
1967973-1	19315	183A	71
1967973-2	19315	183A	71
1967976-1	19315	183A	27
1967983-1	19315	183A	
1967984-1	19315	183A	
1967985-1	19315	183A	82
1967986-1	19315	183A	82
1967987-1	19315	183A	42
1967988-1	19315	183A	42
1967989-1	19315	183A	
1967990-1	19315	183A	51
1967991-1	19315	183A	47
1967994-1	19315	183A	50
1968	20175	F1	12
1970	20175	F1	13
1972	20175	F1	14
1975588-1	19315	68	42A
1975588-2	19315	68	43
1975588-3	19315	68	44
1976113-1	19315	204A	61
1976113-1	19315	204A	68
1979303-1	19315	183A	81C
1979309-1	19315	183A	58
1979763-1	19315	68	29
1979766-1	19315	68	11
1979766-2	19315	68	11
1979766-3	19315	68	11
1979766-4	19315	68	11
1979781-1	19315	68	10
1980160-1	19315	68	28
1980162-2	19315	68	41A
1980164-1	19315	68	22
1980165-1	19315	68	
1980167-1	19315	68	18
1980175-1	19315	68	36A
1981171-1	19315	68	72
1981172-1	19315	68	73
198244	62983	154	22
19884-75-300	98625	62	
2-000-030-09	91547	62	
2-000-030-12	91547	62	
2-000-030-18	91547	62	
2-000-030-18	91547	QC1	1
2-000-030-22	91547	62	
2-000-030-22	91547	QC1	1
2-001-020-01	91547	62	
2-001-020-05	91547	62	
2-010-040-02	91547	62	55
2-010-040-02	91547	QC1	14
2-110-128-04	91547	BULK	
2-14S418-6	02697	64A	34
2-157-47-071	02697	88	68
2-158-47-071	02697	89	56
2-160-114-01	91547	62	34
2-160-114-01	91547	QC1	27
2-160-47-071	02697	88	43
2-161-47-071	02697	76	69
2-162-47-071	02697	88	47B
2-163-47-071	02697	76	75
2-163-47-071	02697	89	59
2-164-47-071	02697	89	29
2-176-47-071	02697	89	86
2-275-47-071	02697	83	91
2-275-47-071	02697	91	18
2-276-47-071	02697	76	143
2-278-47-071	02697	83	236
2-278-47-071	02697	83	255
2-31-1011-10	83259	176	5
2-31-1011-10	83259	177	4
2-32-47-071	02697	83	152
2-33-47-071	45681	97	
2-33-47-071	45681	98	
2-33-47-071	45681	99	
2-333-47-071	82697	KITS	
2-39-47-071	83259	88	101
2-39-47-071	83259	89	134
2-39-47-071	83259	QC1	182
2-39-47-071	83259	KITS	
2-6S418-6	02697	64A	55
2-8S418-6	02697	64A	40
2-8S418-6	02697	64A	56
2A	92555	124	
2N1042	81349	192	20
2N1613	81349	204A	98
2N1671B	03508	194	82
2N1671C	03508	194	118
2N1671C	03508	194	82
2N1711	81349	169	35
2N1711	81349	173	32
2N2219	04713	176	32A
2N2219	04713	177	34A
2N2222A	07263	204A	103
2N2329	81349	189A	86
2N2905A	81349	204A	162
2N2905A	81349	204A	99
2N2945	01295	204A	106
2N343	01295	186	21
2N3440	81349	192	58
2N382	94154	192	35

REFERENCE NUMBER	MFG CODE	FIG NUMBER	ITEM NUMBER
2N859	87216	177	35
2N956	07263	204A	105
2W1-9-8-30	05624	192	70
20-0109-1701	80294	228	93
20-3844		KITS	
20-3844	89513	262B	4
20-4290		KITS	
20-7816		KITS	
20-7998		KITS	
20-7998	89513	262B	12
20C67	89513	261	9
2000-93	89944	170	78
2000-93	89944	171	71
200005	62983	63	103
2001571	94988	210	76
2001656	94988	210	33
200211-79	00736	79	47
200211-79	00736	96	27
200211-81	00736	79	43
200211-81	00736	96	24
200654	00736	79	29
200654-110	00736	79	32
200656-106	00736	79	50
200656-106	00736	96	30
20097H1-3C5D	56878	75	110
2010117	81039	231	115
2010117		KITS	
201918	62983	267	59
202245	00736	96	14
202784	62983	267	61
202798	62983	149	55
202839	62983	149	
20300V	00736	79	49
20300V	00736	96	29
20306AC	00736	79	45
20306AC	00736	96	25
20306V	00736	79	37
20306V	00736	96	20
20312J	00736	79	5
2031510	94988	210	102
204003	88245	184	44A
205KG	21335	265	278
205KG	21335	268	237
205W	21335	154	36
2060013	94988	210	85
20632	89944	170	74
20632	89944	171	59
206865	62983	267	4
20746	71468	BULK	
207598	62983	149	79
2077	53655	60	44
2077	53655	61	46
207798	62983	63	49
2078	53655	60	47
2078	53655	61	49
209873	62983	63	76
209907	62983	63	78
21-1073-1	81873	72	97
21-1073-1	81873	74	8
21AE	09747	157	45
21EN31R1	91929	45	31
2101558	94988	210	3
2101585	94988	210	1
2104-4	78189	192	
21067-12	72914	197	34
211092	62983	267	55
2111540	94988	210	104
2111544	94988	210	82
211193	62983	63	48
211263	62983	267	51
211268	62983	267	52
211269	62983	267	53
2113	20209	157	45
2113A	20209	157	45
211477	62983	138	56
211490	62983	138	56A
211491	62983	138	54
211606	62983	63	79
211753	62983	267	60
211754	62983	267	62
211757	62983	267	10
211758	62983	267	8
211759	62983	267	11
2119	20209	157	45
211900-1	91547	188	66
211900-2	91547	188	66
211907	62983	138	47
211912	92983	138	50
211914	62983	138	41
211917	62983	138	55
211957	62983	63	77
212-12	71286	18	132A
212-12	71286	32	
212-12	71286	11C	82
212-12S	71286	10	7D
212-12S	71286	18	167A
212-12S	71286	249	13
212-12S	71286	249	15
212-12S	71286	KITS	
212-12SD	71286	32	
212634	62983	138	37
212675	62983	138	
212676	62983	138	
212768	62983	149	
212804	62983	63	43
212897	62983	138	34
212898	62983	149	13
212898	62983	274	45
2130	20209	157	45
213033	62983	149	108
213033	62983	274	70
213035	62983	149	106
213035	62983	274	68
213036	62983	149	105
213036	62983	274	67
2131547	94988	210	24
2131629	94988	210	6
2132	20209	157	45
213345	62983	138	45
2134	20209	157	45
213482	62983	149	91
21371	72914	197	
214-16	71286	18	
214-16	71286	18	93E
214-16	71286	18	95E
214-16	71286	18	99E
214-16	71286	32	15
214-16N	71286	BULK	
2149	20209	157	45
21522	82647	129	14
215229	62983	149	
215230	62983	149	
215250	62983	149	101
215250	62983	274	63
215259	62983	149	
215347	62983	149	107
215347	62983	274	69
215664	62983	63	35
2159	20209	157	45
216258	62983	149	41
216285	62983	149	75
216286	62983	149	78

REFERENCE NUMBER	MFG CODE	FIG NUMBER	ITEM NUMBER
216290	62983	149	74
216314	62983	149	40
216315	62983	149	42
216536	62983	267	38
216820	62983	267	50
2171511	94988	210	44
21732	72914	197	21
217879	62983	149	4
217879	62983	274	6
218001	92555	74	80
218001	92555	81	108A
218001	92555	102	37C
218001	92555	103	
218002	92555	102	37C
218002	92555	102	37G
218002	92555	224	46
218101	92555	87	21
218102	92555	272	57
218520	62983	267	58
218522	62983	267	41
218583	62983	267	18
218678	62983	267	13
218689	62983	274	35
218927	62983	138	43
2191-30	18965	135	13
2191541	94988	210	48
219296	62983	267	20
219592	62983	267	
219592	62983	267	33
219864	62983	63	50
219867	62983	63	82
219869	62983	149	
22A524	25140	62	57
22A524	25140	81	40
22A524	25140	QC1	29
22A524	25140	273	16
22D3043-3	77272	92	7
22LHCFM2-40	72962	183	32
22R1101-1	77272	69	23
22R1102-1	77272	69	22
220105	62983	138	33
2201509	94988	210	88
2201523	94988	210	54
220298	77445	BULK	
220301	62983	154	
220315	62983	138	
220316	62983	138	36
220317	62983	138	7
220318	62983	138	
220331	62983	149	37
220356	62983	63	106
220422	62983	266	24
220485	62983	154	
220548	92108	BULK	
2206-12	89944	170	3
2206-12	89944	171	3
2206-51	89944	170	4
2206-904-1	89944	170	13
2206-904-1	89944	171	15
2206-905-1	89944	170	14
2206-905-1	89944	171	16
2206BX3	89944	170	5
2206BX3	89944	171	4
2206B2	89944	170	49
2206B2	89944	171	49
2206CX1	89944	170	54
2206CX1	89944	171	54
2206CX4-04	89944	157	57
2206CX4-04	89944	158	52
2206CX4-04	89944	171	
2206CX902	89944	170	43A
2206CX902	89944	171	43A
2206X03-1	89944	170	17
2206X03-1	89944	171	19
2206X4-04	89944	157	57
2206X4-04	89944	158	52
2206X4-04	89944	171	
220631	62983	266	36
220738	62983	149	100
220738	62983	274	62
220866	62983	63	55
221054	62983	149	
2211528	94988	210	87
221455	62983	63	61
2219-915-1	89944	170	15
2219-915-1	89944	171	17
2219X4-03	89944	157	57
2219X4-03	89944	158	52
222-1-4-20	80813	125	1
22200-1	99643	129	12
22200-1	99643	130	
222348	62983	149	21
222348	62983	274	50
222442	62983	138	
222720	62983	149	59
223DC14	93230	BULK	
2230-4	98159	211	14A
2230-4	98159	211	18B
2230-4	98159	211	2
2230-4	98159	211	33
2230-4	98159	211	38
2230-4	98159	211	41B
2230-4	98159	211	51
2230-4	98159	211	7
2230-4	98159	219	
2230-4	91859	KITS	
223063	62983	267	37
223085	62983	267	36
223095	62983	267	35
2231518	94988	210	40
2231528	94988	210	39
2231530	94988	210	18
2231530	94988	210	26
2231530	94988	210	45
2231532	94988	210	63
2231550	94988	210	53
22322SET12	79300	157	45
223387	62983	63	95A
223593	62983	149	12
223593	62983	274	44
223657	62983	149	11
223657	62983	274	43
223789	62983	267	57
223791	62983	267	56
22393A	75511	262B	17
224L1-501	31435	193	47
224016	62983	138	12
22405A	75511	262B	6
224255	62983	149	26
224286	62983	149	
224287	62983	149	33
224425	62983	149	14
224425	62983	274	46
224569	62983	63	71
224582	62983	63	40
224924	62983	63	72
225-0017-000	71468	BULK	
2250MB	37362	F22	
225234	62983	63	118
2254	80477	10	
2254	80477	10	31A
2254	92541	34	9

REFERENCE NUMBER	MFG CODE	FIG NUMBER	ITEM NUMBER
22574B	72914	190	43
225783	62983	63	69
225799	62983	63	83
225914	62983	149	39
226-404SS	19315	68	37
22622-51	95957	10	46
22622-51	95957	11	140
22622-51	95957	11A	28
22622-51	95957	11A	44
22622-51	95957	11A	57
22622-51	95957	11A	74
22622-51	95957	11B	53
22622-51	95957	11B	60
226300	62983	63	70
226309	62983	63	122
2270086-0001	02987	188	67
2270188-0001	02987	188	69
2271442-0001	02987	188	71
2271443-0001	02987	188	70
2271575-0001	02987	188	72
227305	62983	149	61
2280TL2	79300	157	45
228001	92555	74	80
22809	79300	157	45
22809A	79300	157	45
22809L1A	79300	157	45
22809S12	79300	157	45
22809TL1A	79300	157	45
22809T2	79300	157	45
228101	92555	87	21
22811-2SB	79300	157	45
229112	62983	149	67
229554	62983	154	
230-1261P3	49956	MSUP	
230880	62983	274	22
231-407SS	19315	183A	41
231-407SS	19315	204A	108
231-407SS	19315	204A	165
232648	62983	149	94
23425-0	08455	265	296
23425-0	08455	268	257
234409	62983	149	
234410	62983	149	
235251	62983	267	23
235395	62983	149	62
235396	62983	149	
235424	62983	154	
235457	62983	267	17
235634	62983	149	
237065	62983	63	47
237132	62983	267	2
237133	62983	267	3
237134	62983	267	5
237439	62983	63	39
237451	62983	149	99
237451	62983	274	61
238039	62983	149	89
2391-8CNX1-000	91767	BULK	
239376	62983	63	84
240174	62983	138	46
240175	62983	138	
241016	62983	149	7
241016	62983	274	55
241017	62983	149	6
241017	62983	274	54
241018	62983	149	9
241018	62983	274	57
241103	62983	267	22A
241161	62983	267	43
242E	56289	202	30
242E681	56289	186	20

REFERENCE NUMBER	MFG CODE	FIG NUMBER	ITEM NUMBER
242241	62983	274	8
242814	62983	274	14
242842	62983	274	13
242850	62983	274	25
242976	62983	274	10
243-000054-00	73949	205	20
2433	90166	65	81
244-16	71286	BULK	
244-16S	71286	11	66C
2452-02	72926	223	241
2452-048RET	72962	226	28
2452-054RET	72962	21	
2452-064	72962	15	12
2452-064	72962	15	14
2452-064	72962	15	24
2452-064RET	72962	11	84B
2452-064RET	72962	11	96
2452-126RET	72962	11	73
24540-100	98625	QC1	6
24540-100	98625	249	21
24540-100	98625	249	31
245554	62983	149	80
246077	62983	63	74
246193	62983	149	30
246193	62983	274	40
246249	62983	63	64
246296	62983	266	23
246305	62983	267	32
246374	62983	63	73
246375	62983	63	75
246449	62983	63	51
246709	62983	63	41
247623	62983	63	67
248639	36378	BULK	
248764	62983	149	70
248774	62983	67	46A
248819	62983	67	11
248819	62983	67	47
248821	62983	67	21
248821	62983	67	27
248866	62983	149	69
249581	62983	63	38
25-0021-1115	72914	182A	16
25-0021-1116	72914	182A	16
25-0021-202	72914	182A	16
25-0021-210	72914	182A	16
25-0021-237	72914	182A	16
25-0021-282	72914	182A	16
25-0021-396	72914	182A	16
25-0021-966	72914	182A	16
25-0021-967	72914	182A	16
25-0021-968	72914	182A	16
25-0021-969	72914	182A	16
25-0021-970	72914	182A	16
25-0021-971	72914	182A	16
25-0021-972	72914	182A	16
25-0021-973	72914	182A	16
25-0021-974	72914	182A	16
25-0021-975	72914	182A	16
25-0021-976	72914	182A	16
25-0021-977	72914	182A	16
25-0021-978	72914	182A	16
25-0021-979	72914	182A	16
25-0021-980	72914	182A	16
25-0021-981	72914	182A	16
25-0021-982	72914	182A	16
25-0021-993	72914	182A	16
25-0021-994	72914	182A	16
25-0021-995	72914	182A	16
25-0021-996	72914	182A	16
25-0037-11	72914	182A	17

REFERENCE NUMBER	MFG CODE	FIG NUMBER	ITEM NUMBER
25-0037-9	72914	182A	15
25-0116-1	72914	197A	8
250CKF005	92555	74	79
250001	92555	74	81
25008-2	92108	MSUP	
25009-2	92108	MSUP	
25011-2	92108	MSUP	
251981	62983	138	53
251982	62983	138	
251983	62983	138	
251984	62983	138	
253314	62983	63	111
254869	62983	63	112
254923	62983	63	33
254941	62983	63	53
254942	62983	63	54
254943	62983	63	45
254960	62983	63	66
254961	62983	63	65
2552-048RET	72962	28	24V
2552-048RET	72962	88	91
2552-048RET	72962	89	128
2552-054	72962	42A	25
2552-054	72962	42C	26
2552-52-048	72962	28	24W
2552-52-048	72962	88	90
2552-52-048	72962	89	128A
2552-52-048	72962	KITS	
2552-52-048RET	72962	KITS	
2552-52-054	72962	21	70
25547-1	72914	190	9
255773	62983	63	80
255789	62983	154	22A
2561579	94988	210	47
2561691	94988	210	
25808	72914	190	
25809	72914	190	
2585006	00170	276	1
2585020		182	10
258684	62983	266	44
25915-0	55820	273	1
26C26601	99215	112	34
26C26601	99215	123	
26C26602	99215	109	76
26C26602	99215	119	20
26C26602	99215	123	
26C26603	99215	119	317
26C26603	99215	123	
26C26608	99215	109	77
26C26608	99215	123	
26C26608-76K	99215	123	
26R16-1	71286	11	122A
26R16-1	71286	14	29A
26R16-1	71286	11B	24A
26R16-1	71286	11C	68A
26R8-1	71286	62	
26SJ12	99699	200	17
26S22-3	71286	BULK	
26S37-20	71286	BULK	
26S39-6	71286	11C	65A
26S39-6	71286	222	
26S8-11	71286	BULK	
26S8-11	71286	KITS	
26S8-2	71286	BULK	
26S8-3	71286	32	14
26S8-3	71286	KITS	
26S8-4	71286	32	21
2600-12	71286	249	7
2600-2	71286	32	14
2600-2	71286	32	76
2600-2S	71286	18	165A
2600-2W	71286	BULK	
2600-3	71286	10	7A
2600-6	71286	249	5
2600-6	71286	KITS	
2600-7	71286	11C	82
2600-8	71286	11	121
2600-8	71286	249	10
2600-8	71286	KITS	
2600-9	71286	249	6
2600-9	71286	KITS	
2600ES	71286	32	22
2600ES	71286	249	11
2600ES	71286	249	8
2600E2S	71286	BULK	
2600LW	71286	10	7C
2600LW	71286	14	29
2600SW	71286	11	122
2600SW	71286	18	132A
2600SW	71286	18	165B
2600SW	71286	32	76
2600SW	71286	33	58
2600SW	71286	11C	65B
2600SW	71286	222	
2600SW2	71286	249	12
2600SW2	71286	249	9
260001	92225	74	81
26020011	80234	251	59
26020013	80234	201	13
26030014	80234	188	9
260407	95750	157	57
260407	95750	158	52
260492	62983	267	
260494	62983	267	46
261716	62983	266	12
261811	62983	274	23
261825	62983	149	19A
261831	62983	149	
261833	62983	149	
261834	62983	149	1
261962	62983	274	31
261963	62983	274	
261963	62983	274	42
261965	62983	274	17A
261970	62983	149	97
261982	62983	274	49
261997	62983	149	
262080	62983	149	
262081	62983	149	103
262081	62983	274	65
262210	62983	138	16A
262211	62983	138	
262211	62983	138	35
262212	62983	138	
262213	62983	138	
262214	62983	138	24
262215	62983	138	48
262216	62983	138	44
262218	62983	138	
262219	62983	138	52
262717	62983	274	52
262815	62983	149	44
262815	62983	274	19
262816	62983	149	45
262816	62983	274	20
2651578	94988	210	
2651582	94988	210	72A
2651593	94988	210	16A
2651594	94988	210	64
2651726	94988	210	
2651727	94988	210	
2651728	94988	210	

REFERENCE NUMBER	MFG CODE	FIG NUMBER	ITEM NUMBER
2651729	94988	210	
2651730	94988	210	58
26801-1	99643	150A	7
269305-3	86020	117	
269305-3	86020	129	
26964	99643	150A	18
26966	99643	150A	5
26968	99643	150A	3
26969	99643	150A	17
26969	99643	150A	2
26971	99643	150A	4
26974	99643	150A	9
26975	99643	150A	11
26976	99643	150A	6
26977	99643	150A	21
26981	99643	150A	26
26982	99643	150A	27
26983	99643	150A	23
26984	99643	150A	
26985	99643	150A	20
26986	99643	150A	19
27C30		262	5
27C30		KITS	
27S1-1-15	71286	32	26
27S3-1	71286	32	27
27S3-5	71286	14	27
27S3-5	71286	KITS	
27S5-1	71286	BULK	
2700-02PB	80539	BULK	
2700-11S	71286	BULK	
2700-2	71286	10	78
2700-5	71286	14	26
2700-6S	71286	BULK	
2700-6S	71286	KITS	
2700-7S	71286	BULK	
2700-7S	71286	KITS	
27078	72914	197	3
270957	62983	149	90
271042	62983	149	83
271692	62983	149	93
2725-709	05167	258A	14
2735-5	01634	BULK	
274327	62983	149	
274781	62983	149	88
274795	62983	149	
274796	62983	149	
274797	62983	149	
274953	62983	149	
27498	99643	150A	25
274984	62983	149	63
2752-048	72962	21	63
2752-048RET	72962	21	64
2752-080	72962	BULK	
2752-080RET	72962	BULK	
276347	62983	149	104
276347	62983	274	64
276352	62983	154	3
276354	62983	154	29
276357	62983	149	86
276424	62983	149	87
276434	62983	149	85
2765-51-1	97896	182	
276855	62983	149	38
27696A	75511	2628	9
277417	62983	149	95
278000-3	36536	186	2
2791501	94988	210	49
2791591-1	94988	210	50
2791591-2	94988	210	43
279316	62983	67	28
279790	62983	149	73
279792	62983	149	36
279847	62983	149	56
279993	62983	149	58
28-1C	76691	34	
28-1C	76691	36	
28-1C	76691	62	
28-1C	76691	62	15
28-1C	76691	F20	20
28-1C	76691	F20	32
28-1C	76691	263	14A
28-1C	76691	263	9
28-1C	76691	BULK	
28S10-1	71286	62	7G
28S11-4	71286	62	7G
28VS200Y9	94988	207	
28VS200Y9	94988	207	30
28VS200Y9	94988	207	35
28VS200Y9	94988	208	36
28VS200Y9	94988	210	
280205	62983	149	
280257	62983	149	77
281001	92555	73	30A
281001	92555	83	210
281001	92555	87	22
281001RF0	92555	83	181
281001RF0	92555	81	106
281001RF0	92555	88	33
281001RF0	92555	88	51
281101	92555	BULK	
281250	62983	67	45
281741	62983	149	49
281742	62983	149	50
281743	62983	149	51
281744	62983	149	53
282055	62983	149	71
282056	62983	149	48A
282326	62983	149	54
282401	62983	149	81
282667	62983	149	76
283869	62983	149	
284000	62983	149	
284000	62983	149	23
284000	62983	274	
284000	62983	274	42
284001	62983	149	
284001	62983	274	59
284002	62983	149	98
284111	62983	149	28
284112	62983	149	25
284137	62983	149	24
284142	92983	149	102
284142	62983	274	66
284340	62983	149	
284863	62983	274	28
284864	62983	274	26
284870	62983	274	23
285318	62983	138	
285319	62983	138	24
285321	62983	138	
288907	62983	63	60
289240	62983	149	96
289288	62983	266	14A
29C11	58588	260	29
29C13	89513	260	11
29C14	89513	260	36
29C24	89513	260	12
29C25	89513	260	33
291001	92555	83	210
291001RF0T	92555	81	106
291001RF0T	92555	88	33
291001RF0T	92555	88	51

REFERENCE NUMBER	MFG CODE	FIG NUMBER	ITEM NUMBER
2911C1728S	99171	MSUP	
294055RET	76530	BULK	
2967-3-3		KITS	
2967-3-4		KITS	
29802	75361	76	27
29802	75361	81	46
29802	75361	83	112
3-32X1-2LG	73957	265	205
3-32X1-2LG	73957	268	162
3-32X1-2TYPEA	83584	81	209
3-32X1-2TYPEA	83584	88	98
3-32X3-4LG	73957	265	141
3-32X3-4LG	73957	265	193
3-32X3-4LG	73957	265	197
3-32X3-4LG	73957	268	166
3-32X3-4LG	73957	268	170
3-32X3-4LG	73957	268	98
3-32X5-8TYA	83584	89	34A
3-5N525-6	02697	69	4A
3-5N525-6	02697	70	19A
3-8-23NF3A	99145	203	15
3AB	92555	81	107
3AB	92555	83	210
3AB	92555	124	
3A011-1	98391	112	34
3A011-1	98391	153	
3A011-12	98391	153	2
3A011-13		KITS	
3A011-17	98391	153	
3A011-2	98391	109	76
3A011-2	98391	119	20
3A011-2	98391	153	
3A011-3	98391	119	317
3A011-3	98391	153	
3A011-4	98391	109	77
3A011-4	98391	153	
3A012-13	98391	153	1
3A012-14	98391	153	8
3C6637-50	83843	215	60
3DS4-57B	86577	192	33
3L3F	32105	37A	42
3N123	80183	189A	111
3R1443	26044	119	159
3SA45-4D44G	85254	270	17
3S2791G20189	01526	186	14
3X101412	62983	67	35
3X118323	62983	267	22
3X191469A	62983	154	38
3X194021	62983	67	58
3X215225	62983	63	1
3X218530	62983	267	21
3X246159	62983	67	13
3X62986	62983	266	15
3X75316	62983	63	17
3X94665	62983	63	59
3X94665	62983	267	16
3X99206	62983	138	3
30-0205-1	72914	196	
30-0238-1	72914	204	33E
30-7866		KITS	
30-7866	89513	262B	5
30-7980		KITS	
30-7980	89513	262B	15
30C17	89513	257	19
30C17	89513	262	43
30C17	89513	262C	
300-510	70408	203	22
30004	25204	A18	7
30005	35609	A51	4
30010	25204	A19	5
30015	25204	A18	6
30032-1050	31435	83	350
3009	89513	262A	1
3010164	81039	231	46
3020103	81039	231	40
3039-12	18965	135	
30402103	12848	258	12
30402103	05167	258A	
3070301	81039	231	43
30747-2	72914	197	18
3090115	81039	231	81
3090115		KITS	
3090310	81039	231	54
3090310		KITS	
31-01614-1	70138	64A	23
31-01614-3	70138	64A	22
3103-29	18965	135	
3105206	99879	F12	
311143	62983	63	110
31161-001	31435	83	35
31181096029	00624	A48	
31185	83612	BULK	
312-12S	71286	62	
312-12S	71286	KITS	
31203	33525	BULK	
3121215	81039	231	105
31220-002	31435	83	35
31220-1018	31435	83	35G
31220-1023	31435	83	35M
31220-1027	31435	83	35J
31220-1053	31435	83	35P
312797	62983	63	46
3139	90166	65	26
31710	72914	197	
31731	72914	197	45
32-0242-2	70138	64A	60
32-0481-1	70138	64A	25
32-0554-1	70138	64A	14
32-0568-1	70138	64A	61
32-0620-1	70138	64A	71
32-0621-1	70138	64A	58
32-0622-1	70138	64A	57
32-0697-4	70138	64A	24
32-0697-6	70138	64A	62
32-0713-1	70138	64A	32
32-0718-1	70138	64A	13
32-0718-2	70138	64A	2A
32-0719-2	70138	64A	26
32-0720-2	70138	64A	70
32-0722-1	70138	64A	65
32-0725-1	70138	64A	66
32-0726-1	70138	64A	48
32-0727-1	70138	64A	43
32-0728-1	70138	64A	44
32-0729-1	70138	64A	46
32-0730-1	70138	64A	54
32-0731-1	70138	64A	49
32-0732-1	70138	64A	51
32-0733-1	70138	64A	41
32-0734-1	70138	64A	50
32-0735-1	70138	64A	39
32-0736-1	70138	64A	38
32-0737-1	70138	64A	36
32-0738-1	70138	64A	37
32-0739-1	70138	64A	33
32-0740-1	70138	64A	53
32-0743-1	70138	64A	67
32-0745-1	70138	64A	21
32-0746-1	70138	64A	19
32-0747-1	70138	64A	29
32-0747-2	70138	64A	28
32-0749-1	70138	64A	27

REFERENCE NUMBER	MFG CODE	FIG NUMBER	ITEM NUMBER	REFERENCE NUMBER	MFG CODE	FIG NUMBER	ITEM NUMBER
32-0750-2	70138	64A	15	3302-4	00624	115	59
32-0751-1	70138	64A	4A	3302-4	00624	269	4
32-0752-1	70138	64A	4	3302-8	00624	QC1	80
32-0757-1	70138	64A	11	3302-8	00624	117	35
32-0759-1	70138	64A	35	3302-8	00624	119	262
32-0760-1	70138	64A	30	3305-10	00624	117	36
32-0760-2	70138	64A	46A	3305-10	00624	119	253
32-0761-1	70138	64A	17A	3305-12	00624	A3	1
32-0762-1	70138	64A		3305-4	00624	269	4
32-0766-1	70138	64A	10	3305-8	00624	A3	1
32-0767-1	70138	64A	12	3305-8	00624	QC1	80
32-0768-2	70138	64A	6	3305-8	00624	117	35
32-0769-1	70138	64A	5	3305-8	00624	119	262
32-0770-1	70138	64A	7	33133	99879	F12	
32-0783-1	70138	64A	8	33134	99879	F12	
32C91	89515	260	31	331753	62983	67	25
32C93	89513	261	4	33197R	24617	BULK	
32C94	89513	262	59	33200A	75511	2628	16
3202-10	00624	QC1	86	334	08108	157	8
3202-10	00624	117	36	334	08108	158	8
3202-10	00624	119	253	334	08108	167	43
3202-12	00624	129	2	334	08108	182	
3202-12	00624	129	98	334	08108	188	18
3202-8	00624	129	1	334	08108	201	55
3202-8	00624	129	97	33488	33525	BULK	
320306	00779	BULK		3394-2	18965	135	12
320383	62983	63	104	339887	62983	63	105
320402	62983	67	52	34D99	66640	215	6
3207-12	00624	129	2	340	71984	MSUP	
3207-12	00624	129	98	34033-45	99879	A32	5
3207-8	00624	129	1	34044-12	99879	F12	
3207-8	00624	129	97	34134	00779	190	
320782	62983	67	31	342651	62983	67	41A
321155	62983	67	68	342652	62983	67	43
321162	62983	67	67	342875	62983	67	40
321163	62983	67	65	343001RF0T	92555	76	47
321209	62983	67	37	343001RF0T	92555	81	66
321243	62982	67	46	343001RF0T	92555	89	124B
321245	62983	67	42	343001RF0T	92555	80	22
321248	62983	67	41	343001RF0T	92555	81	173A
321251	62983	67	33	343001RF0T	92555	83	306
321252	62983	67	32	343001RF0T	92555	89	38
321253	62983	67	30	343001RF0T	92555	89	65
321255	62983	67	49	343001RF0T	92555	89	83A
321396	62983	67	59	343101	92555	83	180
321434	62983	67	60	34349	81039	231	11
32190-2	72914	190	29	34349		KITS	
322047	00779	BULK		34350	00779	190	
322326	62983	67	64	345280	62983	67	69
322378	62983	67	54	34901V	00736	79	35
322804	89305	173	27	34901V	00736	96	18
323	79963	210	74	34902J	00736	79	21
323153	00779	BULK		34902V	00736	79	38
323932	89110	BULK		34902V	00736	96	21
32445	00779	BULK		34903J	00736	79	10
3250	76786	269	21	34907J	00736	79	21
325011	00779	BULK		349981	62983	67	44
325092-3	03104	BULK		35000-5	73168	259	16
325167	00779	BULK		350152	93712	248	122
325660	62983	67	57	35108J	00736	79	18
3271-3INX50YDROLL	94960	BULK		35108J	00736	79	4
3271-4INX50YDRL	94960	BULK		35220630010	89944	170	91
3271-500X50YDRL	94960	BULK		35220630020	89944	170	76
3272-500X50YDRL	94960	BULK		35220630030	89944	170	89
327635	00779	BULK		353001	92555	83	
3277X500X50YDRL	94960	BULK		353001RF0T	92555	80	22
3278	82918	BULK		353001RF0T	92555	81	66
32944	02660	183		353001RF0T	92555	83	306
33KDD5FS30160	21335	192	122	353001RF0T	92555	89	38
33KDD5FS30160	21335	233	28	353001RF0T	92555	89	65
3300-8	00624	117	35	35303-11	73168	62	

REFERENCE NUMBER	MFG CODE	FIG NUMBER	ITEM NUMBER	REFERENCE NUMBER	MFG CODE	FIG NUMBER	ITEM NUMBER
353101	92555	83	180	371-127B6	89944	171	22
353114	62983	274	4	371-127B7	89944	170	20
3532	15814	378	42	371-127B7	89944	171	22
353281	62983	67	38	371-127B8	89944	170	20
353282	62983	67	55	371-127B8	89944	171	22
353286	62983	67	14	371-13B	89944	170	2
353290	62983	67	18	371-13B	89944	171	2
353291	62983	67	19	371-14	89944	170	1
353292	62983	67	10	371-14	89944	171	1
353296	62983	67	7	371-16	89944	171	44
353905	62983	67	3	371-20B	89944	170	23
35401-0	73168	QC1		371-20B	89944	171	25
35401-0	73168	QC1	157	371-21B	89944	171	10
35401-0	73168	QC1	161	371-30B	89944	170	19
35401-0	73168	259	12	371-30B	89944	171	21
35401-0	73168	259	6	371-41	89944	170	31
35401-0	73168	259	9	371-41	89944	171	33
35450-1	73168	QC1	162	371-46	89944	170	40
35450-1	73168	259	4	371-46	89944	171	42
354860	62983	67	6	371-52	89944	170	34
354861	62983	67	50	371-52	89944	171	36
354862	62983	67	51	371-53	89944	170	38
35491-0	73168	259	3	371-53	89944	171	40
354940	62983	67	8	371-60B	89944	170	30
35560-3-575	73168	QC1	155	371-60B	89944	171	32
35560-3-575	73168	259	2	371-61B	89944	170	12
35565	72914	190	1	371-61B	89944	171	14
35608-4-575	73168	QC1	156	371-75	89944	170	86
35608-4-575	73168	259	1	371-75	89944	170	88
35681	00779	BULK		371-75	89944	170	90
3591-3CNX0285	91767	281		371-75	89944	171	68
3591-3CNX190	91767	134	76	371-75	89944	171	72
3591-3CNX190	91767	149	20	371-75	89944	171	74
3591-3CNX190	91767	274	51	371-80	89944	170	60
360-100799-00	73949	205	17	371-80	89944	171	60
360297	62983	63	125	371-903	89944	170	24
360297	62983	138	70	371-903	89944	171	26
360897-1	98897	F23		371-906	89944	170	35
361984	06848	215	56	371-906	89944	171	37
362A	60038	50	3	371-907	89944	170	30A
362A	60038	55	3	371-907	89944	171	32A
36311P	00736	79	19	371-908	89944	170	33
36318P	00736	79	19	371-908	89944	171	35
3638-034	90166	65	83	371-909	89944	170	32
3638-040	90166	65	38	371-909	89944	171	34
3638-047	90166	65	75	371-910	89944	170	36
365C63-913M	98625	83	38	371-910	89944	171	38
366-63-325S	98625	119		371-911	89944	170	29
368	60038	50	2	371-911	89944	171	31
368	60038	55	2	371-913	89944	170	26
368-362A	60038	50		371-913	89944	171	28
368-362A	60038	55		371-914	89944	170	25
369-1-9	99057	11	36D	371-914	89944	171	27
36964	00779	190		371K121	89944	170	46
37081	72914	197	6	371K121	89944	171	46
37082	72914	197	5	371K904C2	89944	170	22
371-10	89944	170	48	371K904C2	89944	171	24
371-10	89944	171	48	371S25	89944	170	41
371-11	89944	170	47	371S25	89944	171	43
371-11	89944	171	47	371S54	89944	170	27
371-127B	89944	170	20	371S54	89944	171	29
371-127B	89944	171	22	371S7	89944	170	28
371-127B2	89944	170	20	371S7	89944	171	30
371-127B2	89944	171	22	372838	62983	67	18
371-127B3	89944	170	20	375201-16	00624	62	
371-127B3	89944	171	22	375201-16	00624	213	3
371-127B4	89944	170	20	375201-16	00624	220	3
371-127B4	89944	171	22	375201-16	00624	221	34
371-127B5	89944	170	20	375201-16	00624	221	67
371-127B5	89944	171	22	375201-6	00624	213	42
371-127B6	89944	170	20	375201-6	00624	221	7

REFERENCE NUMBER	MFG CODE	FIG NUMBER	ITEM NUMBER
375201-6	00624	273	10
375419	62983	67	8
3755-16	00624	62	61
3755-16	00624	QC1	73
3755-16	00624	217	
3755-16	00624	217A	21
3755-16	00624	217B	22
3755-6	00624	273	10
3755-6	00624	BULK	
37642	72914	197	51
37688-0	55820	273	1
37688-1000	55820	273	1
378000-16	00624	213	
378000-16	00624	220	50
38C77	89513	262	4
38ZZ	38443	265	202
38ZZ	38443	265	204
38ZZ	38443	268	160
38ZZ	38443	268	223
380933	75477	94	4
380934	75477	94	2
380940	75477	94	8A
380941	75477	94	17
380943-1	75477	94	15
380947	75477	94	16
3817-5	18965	135	5
3823	90166	65	13
3823	90166	65	4
382637	89305	169	29
382637	89305	173	24
382664	89305	169	59
382664-3	89305	169	63
382915-015	89305	176	18
382915-016	89305	177	17
382915-03019	89305	169	30
382978	89305	169	2
382978	89305	173	2
382979	89305	169	65
382979	89305	173	54
382985	89305	169	23
382985	89305	173	22
382999	89305	169	64
383224	77932	169	2A
384921	89305	176	1
384921	89305	177	1
3870	76381	BULK	
388170	89305	176	45
388177	89305	177	50A
388200	89305	176	46
388200	89305	177	51
388265-015	89305	176	17
388265-016	89305	177	16
388266	89305	177	22
388268	89305	177	36
388273-001	89305	176	44
388273-002	89305	177	50
388274	89305	176	11
388274	89305	177	10
388280-001	89305	177	37
388280-002	89305	176	41
388280-002	89305	177	47
388280-003	89305	176	33
388280-003	89300	177	43
388280-004	89305	176	37
388280-004	89305	177	32
388280-007	89305	176	35
388280-008	89305	176	38
388285	89305	176	16
388285	89305	177	15
388286-002	89305	176	15
388286-002	89305	177	14
388288	89305	176	19
388288	89305	177	18
388294	89305	176	12
388294	89305	177	11
388295	89305	176	9
388295	89305	177	8
388297	89305	176	22
388297	89305	177	21
388302	89305	177	3A
388310	89305	176	23
388312	89305	177	46
388317	89305	176	36
388318	89305	176	34
388321	89305	176	31
388321	89305	177	29
388322	89305	176	2
3910068A195	99879	F12	
3910068A220	99879	F12	
3911-1QA1-1	19315	158	10
3911-1QA1-1	19315	165	
392135	89305	169	26
392136	89305	169	58
392137	89305	169	56
39220630010	89944	170	44
392286	77932	169	57
392295	77932	169	27
392799	89305	177	45
3928-11	71279	189	39
392800	89305	177	30
392801	89305	177	25
392802	89305	176	6
392802	89305	177	5
392803	89305	176	28
392805	89305	176	14
392805	89305	177	13
392806	89305	177	33
392807	89305	176	32
392813	89305	169	49
392814	89305	176	40
392815	89305	177	42
392816	89305	177	38
393578-15	89305	169	6
393578-15	89305	173	5
393650-1	89305	169	3
393650-1	89305	173	3
393653	89305	169	67
393653	89305	173	56
393756	89305	173	23E
397-2	94640	188	
397-8	94640	228	
397000	89305	169	24
397096	89305	169	1
397096	89305	173	1
397158-03019	89305	169	
397158-06013	89305	173	
397196	89305	173	23C
397219-03002	89305	169	55
397219-06006	89305	173	52
397222	89305	169	17
397222	89305	173	12
397224-03019	89305	169	16
397226	89305	169	31
397226	89305	173	43
397227	89305	169	46
397227	89305	173	50
397255-06013	89305	173	11
397491-3	89305	169	14
397491-3	89305	173	10
397544	89305	169	47
397544	89305	173	44
397556-1	89305	169	8

REFERENCE NUMBER	MFG CODE	FIG NUMBER	ITEM NUMBER
397556-4	89305	173	6
397754-03002	89305	169	5
397754-06006	89305	173	4
397851	89305	169	9
397851	89305	173	7
397934-004	89305	169	28
397934-005	89305	173	23D
397967-03019	89305	169	32
397967-06013	89305	173	26
397970	89305	169	25
398-8	94640	188	
4-00124-009	03848	BULK	
4-102-0001	09384	F22	
4AB	84685	83	180
4MP937G	27637	198	7
4NBF614YJ		KITS	
4R66-5	97896	182	
40-7632		KITS	
40-7632	89513	262B	10
40-7633		KITS	
40-7633	89513	262B	8
40G11-3	71286	31	13C
40G11-4	71286	18	153C
40G16-130	71286	18	153B
40G16-130	71286	32	
40G16-130	71286	32	44
40G26-1	71286	18	
40G26-1	71286	18	93D
40G26-1	71286	18	95D
40G26-1	77272	18	99D
40G26-1	71286	32	10
40R12-1	71286	31	14A
40R8-16-1	71286	11C	1A
40S28-12-122A	71285	BULK	
40S37-7	71286	18	153A
40S39	71286	18	153D
40S5-2	71286	31	13A
40S5-2	71286	KITS	
400A	61864	18	
40011		KITS	
40016-5		KITS	
400164	79300	157	45
400164	79300	158	40
4002-12W	71286	32	44
4002-3	71286	18	149A
4002-3	71286	KITS	
4002-4	71286	18	149D
4002-4S	71286	11	65C
4002-6S	71286	18	
4002-6S	71286	18	93B
4002-6S	71286	18	95B
4002-6S	71286	18	99B
4002-6S	71286	32	8
4002-6S	71286	KITS	
4002G	71286	BULK	
4002N	71286	18	149B
4002NS	71286	11	65D
4002NS	71286	18	
4002NS	71286	18	93C
4002NS	77272	18	95C
4002NS	71286	18	99C
4002NS	71286	32	9
40022		KITS	
40023		KITS	
40024		KITS	
40036		KITS	
40043	93712	248	117
40044-22		KITS	
40046		KITS	
40070	93712	248	113
40071	93712	248	114A
40073	93712	248	114
40099-1		KITS	
40099-2		KITS	
40100		KITS	
40104	93712	248	118
40119	93712	248	119
40136		KITS	
40139	93712	248	77
40146		KITS	
40173	93712	248	121
4020106-1	81039	231	120
4020106-2	81039	231	122
4021109	81039	230	17B
4021109	81039	231	12
40220630010	89944	170	73
40222A	72671	F16	17
40222A	72671	F16	39
40223A	72671	F16	21
40223A	72671	F16	40
4028-9	72285	BULK	
4030	77247	MSUP	
40306B	72671	F10	2E
40307B	72671	F15	13A
40308B	72671	F15	13
40315		KITS	
40321		KITS	
40323	93712	248	126
40324		KITS	
40325-7		KITS	
40338	93712	248	120
40340	93712	248	125
40341	93712	248	115
40351-1		KITS	
40351-2		KITS	
40360		KITS	
40361		KITS	
40364	93712	248	123
40386	93712	248	124
404718		145	25
404718		KITS	
40485B	91796	F17	31
405390		145	5
405390		KITS	
405391		145	7
405391		KITS	
405392		145	4
405392		KITS	
405498		145	19
405498		145	27
405498		KITS	
405499	77068	145	8
405821		145	26
405821		KITS	
405822		145	20
405822		KITS	
405833		KITS	
405834		KITS	
406001	92555	BULK	
406001RF0T	92555	HO	22A
406001RF0T	92555	81	108
406001RF0T	92555	83	209
406001RF0T	92555	83	264
406001RF0T	92555	83	364
406101	92555	BULK	
4067B102	82402	265	240
4067B115	82402	265	105
4067B115	82402	268	123
4067B118	82402	268	171
4067B119	82402	265	191
4067B119	82402	265	200
4067B119	82402	268	172

REFERENCE NUMBER	MFG CODE	FIG NUMBER	ITEM NUMBER	REFERENCE NUMBER	MFG CODE	FIG NUMBER	ITEM NUMBER
4067B120	82402	265	136	4067C42	82402	268	100
4067B120	82402	268	92	4067C43	82402	265	145
4067B131	82402	265	165	4067C43	82402	268	101
4067B131	82402	265	171	4067C45	82402	265	195
4067B131	82402	268	140	4067C45	82402	268	167
4067B132	82402	265	38	4067C47	82402	265	194
4067B132	82402	268	57	4067C47	82402	268	165
4067B135	82402	265	140	4067C48	82402	265	198
4067B135	82402	268	96	4067C48	82402	268	169
4067B137	82402	265	166	4067C50	82402	265	264
4067B137	82402	268	141	4067C50	82402	268	189
4067B30	82402	265	54	4067C52	82402	265	208
4067B31	82402	265	79	4067C52	82402	268	222
4067B31	82402	268	37	4067C59	82402	265	308
4067B34	82402	265	57	4067C59	82402	268	269
4067B35	82402	265	92	4067C70	82402	265	
4067B35	82402	268	22	4067C70	82402	268	132A
4067B37	82402	265	131	4067C72	82402	265	164
4067B37	82402	268	109	4067C72	82402	265	170
4067B51	82402	265	216	4067C72	82402	268	139
4067B58	82402	265	146	4067C82	82402	268	216
4067B58	82402	268	102	4067C85	82402	265	217
4067B61	82402	265	135	4067C89	82402	265	242
4067B61	82402	268	91	4067C90	88044	268	107
4067B62	82402	265	207	4067C94	82402	265	14
4067B62	82402	268	164	4067C94	82402	268	81
4067B65	82402	265	304	4067C96	82402	265	177
4067B65	82402	268	263	4067C96	82402	268	149
4067B73	82402	265	16	4067D122	82402	265	284
4067B73	82402	265	180	4067D122	82402	268	244
4067B73	82402	268	142	4067D123	82402	265	201
4067B73	82402	268	83	4067D123	82402	268	226
4067B80	82402	265	270	4067D125	82402	265	265
4067B95	82402	265	88	4067D125	82402	268	225
4067B95	82402	268	19	4067D15	82402	268	120
4067C121	82402	265	190	4067D165	82402	268	205
4067C121	82402	268	227	4067D166	82402	268	185
4067C124	82402	265	148	4067D167	82402	268	194
4067C124	82402	268	103	4067D175	82402	268	195A
4067C153	82402	268	217	4067D176	82402	268	195
4067C16	82402	265	124	4067D177	82402	268	184
4067C16	82402	268	130	4067D179	82402	268	204
4067C164	82402	268	180	4067D18	82402	265	288
4067C164	82402	268	206	4067D18	82402	268	249
4067C168	82402	268	199	4067D181	82402	268	186
4067C169	82402	268	198	4067D181	82402	268	193
4067C171	82402	268	200	4067D19	82402	265	286
4067C172	82402	268	197	4067D19	82402	268	248
4067C173	82402	268	201	4067D197	82402	265	308
4067C174	82402	268	210	4067D20	82402	265	291
4067C178	82402	268	178	4067D20	82402	268	253
4067C180	82402	268	183	4067D21	82402	265	294
4067C182	82402	268	137	4067D21	82402	268	255
4067C185	82402	268	149A	4067D22	82402	265	85
4067C186	82402	268	149E	4067D22	82402	268	18
4067C192	82402	268	235	4067D23	82402	265	90
4067C193	82402	268	138	4067D23	82402	268	20
4067C25	82402	268	131	4067D24	82402	265	83
4067C27	82402	265	142	4067D24	82402	268	26
4067C27	82402	268	97	4067D26	82402	265	53
4067C28	82402	268	124	4067D26	82402	268	15
4067C29	82402	265	104	4067D46	82402	265	139
4067C29	82402	268	125	4067D46	82402	268	95
4067C32	82402	265	82	4067D63	82402	265	86
4067C32	82402	268	24	4067D63	82402	268	17
4067C33	82402	265	81	4067D67	82402	268	73
4067C33	82402	268	23	4067D68	82402	265	13A
4067C39	82402	268	153	4067D69	82402	265	181
4067C40	82402	265	206	4067D69	82402	268	148
4067C40	82402	268	161	4067D76	82402	265	68
4067C42	82402	265	143	4067D76	82402	268	39

REFERENCE NUMBER	MFG CODE	FIG NUMBER	ITEM NUMBER	REFERENCE NUMBER	MFG CODE	FIG NUMBER	ITEM NUMBER
4067D77	82402	265	73	42-798100	81755	BULK	
4067D77	82402	268	43	42-798600	81755	BULK	
4067D88	82402	265	305	42CV15001	90166	65	3
4067D88	82402	268	266	42C14155-1	80244	BULK	
4067E13	82402	268	172A	42FLW624	56878	269	15
4067E17	82402	265	285	42253-1	00502	137	35
4067E17	82402	268	247	42253-2	00502	137	22A
4067E38	82402	268	90	4231547	94988	210	62
4067E6	82402	265	6	42345-115	00502	137	23
4067E6	82402	268	5A	4240-10	98159	BULK	
4067R10	82402	268	231	424356		KITS	
4067R162	82402	268		424360		KITS	
4067R184	82402	268	56	42445OPC7	10001	MSUP	
4067R187	82402	268	150	425	76381	BULK	
4067R9	82402	268	258	428A1-00INWD60YDRL	76381	BULK	
4073-3	98159	10	39	428A2-00INWD60YDRL	76381	BULK	
4074	98159	11A	85	428A3-00INWD60YDRL	76381	BULK	
40740A	72671	F16	10	428A4-00INWD60YDRL	76381	BULK	
40741B	72671	F16	43	430-001-001	26055	221A	
41A9177	00724	42	9	430-001-002	26055	221A	
41C92A10	56289	169	50	430-001-003	26055	221A	
41C92A10	56289	173	47	430-001-004	26055	221A	
41175	05637	F16	13	4312	00142	189A	35
41176	05637	F16	46	43594	62983	154	
413003	75915	260	30	43599	62983	154	24
41311 02-2A1A		KITS		436-1-304-2	36536	186	6
41311 04-0A1A		KITS		436-1-305-1	36536	186	8
41311 04-2A1A		KITS		436-1-308-1	36536	186	7
4131102-2A1A		KITS		4380205		KITS	
4131102-2A1A	81039	230	32	4380205	81039	231	27
4131102-2A1A	81039	230	60	4390934	81039	230	82
4131102-2A1A	81039	231	30	444-011-001	26055	186A	5
4131102-2A1A	81039	231	75	450-003-001	26055	221A	12
4131102-2A1A	81039	231	78	450-003-002	26055	221A	12
4131103-2A1A		KITS		450-003-003	26055	221A	12
4131103-2A1A	81039	231	48	450-003-004	26055	221A	12
4131104-0A1A		KITS		450694	77294	157	57
4131104-2A1A		KITS		450694	77294	158	52
4131104-2A1A	81039	230	42	450706	77294	157	45
4131104-2A1A	81039	230	55	45220630010	89944	170	77
4131104-2A1A	81039	231	72	45220630021	89944	170	64
4131104-2A1A	81039	231	91	4530303	81039	231	51
4137103-0A1A	81039	231	32	4540405	81039	231	
4137103-0A1A	81039	231	36	455-3W	76381	BULK	
4137103-0A1A		KITS		455-5	76381	BULK	
41374249	81755	BULK		45687	62983	63	44
41384209	81755	BULK		45687	62983	274	27
4150335	81039	230	16	4600207-2	81039	231	61
416-187	99321	211	39	4600207-2		KITS	
416-187	99321	218	43	4600208-2	81039	231	62
416-187	99321	219		4600208-2		KITS	
416-187	99321	219	34	461812		KITS	
416-50	99321	211	39	461813		KITS	
416-50	99321	218	43A	4620105	81039	231	44
416-50	99321	219A	111	4620129	81039	230	
416-50	99321	219A	6	462087		KITS	
416-736	99321	218	44B	462095		KITS	
416-736	99321	219A	112	46264	62983	154	31
416-736	99321	219A	7	463101	89305	176	39
416-736	99341	211	39	463101	89305	177	44
416001	92555	83		463156	89305	169	54
416001RFOT	92555	80	22A	463156	89305	173	51
416001RFOT	92555	81	108	463437	89305	169	45
416001RFOT	92555	83		463513	89305	173	46
416001RFOT	92555	83	209	46361	44655	201	106
416001RFOT	92555	83	264	463724	89305	169	48
41670	72671	F10	2D	463724	89305	173	45
41850A1-4580	72914	188	22	463944	89305	173	23A
41850A1-4580	72914	190		464G1032-10	82831	18	
4198	90166	65	76	46487	62983	154	36
4198	90166	65	78	4649	98159	10	27

REFERENCE NUMBER	MFG CODE	FIG NUMBER	ITEM NUMBER
4660-02	80539	BULK	
4660H02	80539	BULK	
466294		145	9
466294		KITS	
466296	77068	145	13
4680-119	90166	65	63
4680-142	90166	65	61
468001	92555	74	78
468001RFOT	92555	83	360
468001RFOT	92555	88	94
469100	77068	119	374
469100	77068	145	
469193	77068	145	28
469196		145	1
469324	89305	173	23B
469361	89305	173	25
469366	89305	173	23
47-150-243-1	97499	29	
47003	44655	201	87
471-11NCH	76381	BULK	
4720EG003-16Z0160	81996	213	
473	76381	BULK	
4744405P9	24446	BULK	
475C62NW	91511	213	38
475C62NW	91511	220	35
477KN40	89944	170	16
477KN40	89944	171	18
477KN43	89944	170	10
477KN43	89944	171	12
477KN43-2	89944	171	12
478-1-002	36536	186	10
478-1-003	36536	186	17
478-1-006	36536	186	28
478-4-001	36536	186	
478-4-004	36536	186	24
478001	92555	74	78
478001RFOT	92555	83	
48A7141-1	98745	F23	
48A7141-1	98745	BULK	
48B7796	88042	271	15
48C929-2	80049	F24	4
48P9	56289	189A	10
4830513	81039	231	35
4830514	81039	231	34
4870102	81039	231	
49010C600	82402	268	250
4920CH47-003-1	81996	A6	2
4920103	81039	231	52
49245	61864	BULK	
494H1032-16	82831	24	
4943	90166	65	11
4946C	73760	216	22
4996C		KITS	
4996C	73760	216	22
4996D		KITS	
4996D	73760	216	6
5-32JNA	95987	183A	68
5-32X1 1-4	73957	151	11
5-32X1-2TYPEA	83584	83	352
5-32X1-2TYPEA	83584	80	2
5-32X5-8 TYPE A	83584	81	124
5-32X5-8 TYPE A	83584	81	126
5-32X7-16TYPEA	83584	81	211
5-32X9-16TYPEA	83584	80	11
5-32X9-16TYPEA	83584	80	15
5A020	98391	QC1	103
5A020	98391	QC1	113
5A020	98391	119	122
5A020	98391	129	
5A020	98391	129	95G
5A020	98391	143	25

REFERENCE NUMBER	MFG CODE	FIG NUMBER	ITEM NUMBER
5R2-1	71286	18	
5S10-13	71286	32	54
5S3-1	71286	18	
5S3-1	71286	32	55
5S3-1	71286	182	
5S5-6	71286	182	
50-001-020	02470	BULK	
50D3770	80049	37	32
50D3770	80049	37A	99
5000-45	62983	266	4
5000-62ST18		KITS	
5000B	95264	192	45
50000T28	75250	A40	5
50000T43	75250	A55	
50000T5	75250	A55	
50000T55	75250	A54	
500001RFOT	92555	89	124A
5000166	73842	57	19
50049	75250	134	21
50049	75250	134	30
500702-5310	75477	251	12
50076	75250	134	63
5008-100	79163	274	24
5008-87	79136	138	40
50178-002	31435	191	37
50178-002	31435	191	4
50178-002	31435	195	29
50178-002	31435	195	52
50185-010	31435	191	11
50185-010	31435	191	43
50185-010	31435	195	42
50185-010	31435	195	7
502006	73030	BULK	
50221	75250	134	17
50221	75250	134	28
50221	75250	134	36
50252-000	31435	196	1
50252-000	31435	198	45
5050614	81039	231	20
505548-24	75477	94	20
506129-10D	99879	211	29
506129-10D	99879	211	31
506130-10D	99879	211	30
506130-10D	98159	211	34
5066	89616	BULK	
50675	75250	134	
50675	75250	KITS	
50926	75250	134	24
51J3817	80049	263	27
5100-12		KITS	
5100-62W	79136	183	44
5103-31	79136	154	4
5107	90166	65	55
5108-93	79136	154	21
5113	90166	65	35
5115	90166	65	33
5116	90166	65	32
5118	90166	65	31
5119	90166	65	34
5120CH47-013-1	81996	A2	8
512054	73842	57	17
512054	73842	58	16
51220630011	89944	170	97
51232	75250	134	
51250-003	31435	191	40
51250-003	31435	191	8
51250-003	31435	195	25
51250-003	31435	195	51
51250-010	31435	191	40
51250-010	31435	191	8
51250-010	31435	193	

REFERENCE NUMBER	MFG CODE	FIG NUMBER	ITEM NUMBER
51250-010	31435	195	25
51250-010	31435	195	51
51250-1004	31435	193	35
51250-1018	31435	193	44
51250-1033	31435	193	58
51250-1046	31435	193	95
51250-1048	31435	193	5
51250-1050	31435	193	1
51250-1052	31435	193	27
51250-1055	31435	193	86
51250-1057	31435	193	37
51250-1058	31435	193	32
51250-106	31435	193	7
51250-1062	31435	193	38
51250-306	31435	193	
51250-307	31435	193	28
51250-308	31435	193	
51319	75250	134	
5134	90166	65	30
5144-137	90166	65	50
51480	75250	134	79
51500-1272	31435	194	6
51500-1850	31435	191	25
51500-1850	31435	194	228
51500-1850	31435	195	19
51500-325	31435	194	
51500-516	31435	194	
51500-517	31435	194	
51500-521	31435	191	21
51500-521	31435	194	193
51500-521	31435	195	18
51500-526	31435	191	20
51500-526	31435	194	157
51500-526	31435	195	17
51500-536	31435	191	18
51500-536	31435	194	75
51500-536	31435	195	15
51500-543	31435	194	64
51500-556	31435	194	
51500-586	31435	191	19
51500-586	31435	194	114
51500-586	31435	195	16
51500-615	31435	194	
51500-620	31435	194	
51500-9970	31435	194	192
51508-1220	31435	194	217
5151	90166	65	62
5152	90166	65	70
5153	90166	65	71
5154	90166	65	67
5155	90166	65	69
5170501	81039	231	42
5170501	81039	231	89
5170501		KITS	
51720	75250	134	
51722	75250	134	58
5178	90166	65	83A
51791	75250	134	55
51799	75250	134	68
5180CH47-000-1	81996	F1	1
51825	75250	134	65
51837	75250	134	38
51839	75250	134	72
51840	75250	134	
51862	75250	134	64
51864	75250	134	67
5188	90166	65	95
51897	75250	134	
51898	75250	134	
51899	75250	134	
51902	75250	134	74
51905	75250	134	7
51924	75250	134	26
51927	75250	134	57
51928	75250	134	51
51929	75250	134	73
5193	90166	65	58
51930	75250	134	45
5195	90166	65	1
51952	75250	134	22
52-028-125-0375		KITS	
52-040-187-1125	72962	44	25A
52-040-187-1375		59	38
52-040-187-1375		KITS	
52-040-187-1875		51	63
52-040-187-1875		KITS	
52-048-250-2656	72962	76	128
52-048-250-2656	72962	KITS	
52-118-10	98391	153	13
52-118-10		KITS	
52-118-114	98391	153	
52-118-13	98391	153	11
52-27-19	98391	153	7
52-27-23	98391	153	17
52-79-101-1	98391	144	9
52-79-102	98391	144	8
52-79-103	98391	144	2
52-79-104-1	98391	144	1
52-79-112	98391	144	7
52-81-101	98391	136	21
52-81-103	98391	136	20
52-81-107	98391	136	4
52-82-101	98391	136	10
52-82-107	98391	136	9
52-82-109	98391	136	8
52C93	89513	251	30
52LHA3575-02	72962	11A	35
52LHA3575-02	72962	11A	50
52ND2398-24-080	72962	BULK	
52OANDSTYLEGB	24981	21	
5200-5187-5194	89616	BULK	
5242B		216	42
5242B		KITS	
5242C	73760	216	42
52437	75250	134	69
52488	62983	138	31
52488	62983	149	64
52488	62983	274	39
5249	93389	34	
52665	75250	134	7
52777-300	00624	64	1
53D22004	80049	F24	1
53D22020	80049	F24	2
53G1	31596	157	45
530-4SS	02987	165	11
530-4SS	02987	165	14
530-4SS	02987	165	4
531001	92555	49	3
531001RFOT	92555	81	208
539798	73481	BULK	
54H19651	98750	37	36
54H19651	98750	37A	103A
5403	05154	BULK	
541001RFOT	92555	81	208
541101	92555	80	22
54120013		KITS	
5412033	81039	231	24
5412033		KITS	
5412100B0312A	81039	231	39
5412100B0312A		KITS	
5412100E0250A	81039	230	77
5412100E0250A	81039	231	82

REFERENCE NUMBER	MFG CODE	FIG NUMBER	ITEM NUMBER
5412100E0250A		KITS	
5415-012	90166	65	44A
542-002-001	26055	221A	
545-015-001	26055	221A	4
545-016-001	26055	221A	6
546-010-001	26055	186A	
546-020-001	26055	186A	4
54916-1804M	98625	62	41
54916-1804M	98625	QC1	12
54916-1938M	98625	62	41
55-0090-3	72914	190	2
550743-1	77068	119	
550751		KITS	
5528A		KITS	
5528A	73760	216	81
5540-5	02121	51	10
555-47	93712	248	96
555-50-2	93712	248	102
5550111	81039	230	81
5555-15		KITS	
5555-25		KITS	
556-008-001	26055	221A	9
556-008-002	26055	221A	9
556-008-003	26055	221A	9
556-008-004	26055	221A	9
55661	75250	134	16
55668	75250	134	19
55671T1	75250	A54	
55675	75250	134	15
55682	75250	134	14
55748	75250	134	33
55764	75250	134	31
55765	75250	134	34
5580-3	90166	65	22A
5580-5	90166	65	36A
5580-7	90166	65	73A
55871	75250	134	7B
55872	75250	134	7A
55905	98625	139	54
56B25A	00624	76	18
56B25A	00624	81	26
56B25A	00624	83	125
56D6221	97151	34	
56E589	99238	37	38
56F658	81349	43	
56F658	81349	45	
561871-8-8		KITS	
5620202	81039	230	
56220630020	89944	170	84
56220630040	89944	170	66
56220640010	89944	BULK	
562622-2		KITS	
5641	90166	65	86
5649	90166	65	52
5650	90166	65	51
56504	75250	134	78
5651	90166	65	53
56512	75250	134	11
56527	75250	134	70
56531	75250	134	56
56534	75250	134	71
56539	75250	134	54
56632T1	75250	A37	2
56632T2	75250	A46	1
56669-2150S	98625	62	35
56669-2150S	98625	QC1	10
56688	75250	134	8
5669	90166	65	37
56690		134	
56691T1	75250	A46	2
56692	75250	134	9
56693	75250	134	5
567	83527	MSUP	
5670	90166	65	82
56757	75250	134	
56758T1	75250	A47	1
56762	75250	134	62
5690906	81039	231	
5690906		KITS	
5693	90166	65	88
57A88	89513	262	27
57A88		KITS	
57D677	80049	37	32
57D677	80049	37A	99
57220630010	89944	170	87
57220630060	89944	170	83
57426	62983	154	32
575R989H02	89661	115	59
57556GB	73760	216	33B
5770	90166	65	65
5775	90166	65	93
5776	90166	65	47
5777-6	90166	65	44
5780	90166	65	40
5782	90166	65	91
5783	90166	65	90
5785	90166	65	89
5789	90166	65	28
5790	90166	65	72
5796	90166	65	73
5797	90166	65	64
5798	90166	65	60
5802	90166	65	59
5805	90166	65	57
58326A	73760	216	70B
58422	75250	134	60
58481		KITS	
58481	75250	52	10
58481	75250	105	4
58495	00502	BULK	
5877	90166	65	87
5886	90166	65	85
5887	90166	65	84
59-028-125-0375	72962	78	48
59-040-187-1-250		KITS	
59A5A186-7	10001	186	12
59A5A186-7	10001	186	16
59A5A186-7	10001	186	5
59C39	89513	262	44
590849	21450	190	
5910-1	90166	65	80
59179	00502	137	39
59181	00502	137	7
59183	00502	137	44
59184	00502	137	22
59186	00502	137	20
59186	00502	137	42
59187	00502	137	32
59189	00502	137	
59190	00502	137	
59191	00502	137	34
59195	00502	137	19
59195	00502	137	41
5927	90166	65	12
5930	90166	65	18
5931	90166	65	16
5934-2	90166	65	6
5934-5	90166	65	6
5935	90166	65	9
5936	90166	65	19
5938	90166	65	
5953	90166	65	92

REFERENCE NUMBER	MFG CODE	FIG NUMBER	ITEM NUMBER
5961-928	89373	43	12
597	79963	231	26
597		KITS	
6-967-2-1	86768	109	
6-967-2-1	86768	139	23
6-967-2-1	86768	139	72
6-967-2-7	86768	109	
6-967-2-7	86768	139	25
6-967-2-7	86768	139	76
6NBF817YJ	60380	49	27
6RW102YF1D	24446	207	30
6RW102YF1D	24446	207	35
6RW102YF1D	24446	208	36
60-0954-1	72914	182A	48
60C38	89513	262	25
60C38		KITS	
600-001-5-16	83259	26	
600-015-10	83259	196	
600-042-1	83259	43	6
600-045	07096	32	
600-045	07096	32	4
6001-5A	91506	34	63
6003	90166	65	77
6003-31-4-1H	31435	193	29
6007-3A	91506	269	10
601-12	00624	KITS	
601-16	00624	KITS	
601-20	00624	KITS	
601-4	00624	KITS	
601-6	00624	KITS	
601-8	00624	KITS	
601002H0120	00624	83	240
601096	62983	127	6
6014	90166	65	79
601510	62983	127	9
6016-1A	91506	34	
6016-1A	91506	34	62
601810	62983	149	
602109	62983	63	119
6021515-31	81039	231	63
6021515-31		KITS	
6021515-32	81039	231	63
6021515-32		KITS	
6021541	81039	230	1
6021541		KITS	
6021541-8	81039	230	1
6021541-8		KITS	
6022408	81039	231	53
60327R1	72619	167	14
603554	62983	138	66
603555	62983	63	129
604D3-100-100	82831	24	
604D3-50FT53NF	82831	BULK	
6042H32	27191	198	21
604425	62983	63	123
604429	62983	63	99
604434	62983	63	117
604436	62983	63	120
604445	62983	63	7
604448	62983	63	20
604449	62983	63	23
604450	62983	63	9
604451	62983	63	13
604452	62983	63	21
604453	62983	63	10
604454	62983	63	19
604455	62983	63	6
604466	62983	63	8
604496	62983	63	3
604505	62983	63	97
604535	62983	63	14
604685	62983	63	126
604685	62983	138	72
604686	62983	63	115
604686	62983	138	59
604793	62983	63	11
6050	90166	65	46
6051	90166	65	41
606586	62983	63	24
606586	62983	67	9
606587	62983	63	12
606587	62983	67	20
606615	62983	127	
6071	90166	65	10
607257	62983	63	128
607706	62983	63	116
607715	62983	63	95
608005	62983	63	25
608298	62983	63	100
608300	62983	63	113
608301	62983	63	109
608302	62983	63	108
608304	62983	63	96
608305	62983	63	98
608308	62983	63	107
608448	62983	63	102
608655	62983	63	121
6088	90166	65	23
608872	62983	138	62
6090	90166	65	74
609033	62983	138	73
609034	62983	138	
609036	62983	138	
609037	62983	138	
609038	62983	138	
609039	62983	138	63
609040	62983	138	61
609041	62983	138	
609042	62983	138	69
609043	62983	138	65
609044	62983	138	68
609045	62983	138	67
609046	62983	138	60
609047	62983	138	58
609285	62983	63	18
61-40106-0322	89944	170	8
61-40106-0322	89944	171	8
61-42805-0212	89944	170	61
61A61	89513	262	54
61015-01	83326	160	60
61015-101	83326	160	14
61015-101	83326	160	67
61015-101	83326	160	84
61015-101	83326	160	87
61018050208	89944	170	43
610415	62983	138	
610415	62983	138	39
610519	62983	138	
610520	62983	138	
611360	14170	BULK	
6116	77969	21	
611763	62983	138	
611764	62983	138	
611764	62983	138	39
611765	62983	138	73
61401060320	89944	170	7
61401060320	89944	171	7
61401100018	89944	BULK	
61406050424	89944	170	72
61430050206	89944	170	63
6198ANM	75595	28	39
6284407	07878	37	

REFERENCE NUMBER	MFG CODE	FIG NUMBER	ITEM NUMBER
62B4407	07878	37A	
62FM440	56878	186	9
624-13LD	93712	248	21
624-18-2LD	93712	248	22
624A5	00624	BULK	
625B1C104J	14752	194	190
6260	90166	65	49
63C65	89513	260	
63C65	58588	KITS	
63X213	73680	265	280
63X213	73680	268	243
64C12	89513	261	19
64C13	89513	261	37
640-1-13	70236	113	9
640-1-14	70236	113	8
640-1-6	70236	113	12
640-2-10	70236	113	6
640-2-11	70236	113	4
640-2-12	70236	113	10
640-2-2	70236	113	1
6402	70236	112	47
6402	70236	113	
640815	62983	67	63
640816	62983	67	62
6413-3	90166	65	66
65C30	89513	257	3
65C30	89513	262	
65D34083-7	98750	37	
65D34083-7	98750	37A	
653278	56232	278	15
66-0101-1	72914	182A	22
66-0110-1	72914	182A	14
66-1093-3	72914	182A	18
66634	62983	63	68
66634	62983	154	28
67A370-1	90166	65	56
6701C		KITS	
6701C	73760	216	48
6701D		KITS	
6701D	73760	216	51
67045	62983	63	56
671CLU4-035D	89944	157	57
671CLU4-035D	89944	158	52
671CPU19-015	89944	157	57
671CPU19-015	89944	158	52
671CPU19-015D	89944	157	57
671CPU19-015D	89944	158	52
671CPX10-051	89944	157	57
671CPX10-051	89944	158	52
671CPX10-051D	89944	157	57
671CPX10-051D	89944	158	52
671CPX4-037	89944	157	57
671CPX4-037	89944	158	52
671CPX4-037D	89944	157	57
671CPX4-037D	89944	158	52
671CPX4-038	89944	157	57
671CPX4-038	89944	158	52
671C133	89944	170	53
671C133	89944	171	53
671C134	89944	170	52
671C134	89944	171	52
673447	56232	278	16
6746-10-75		216	32
6746-10-75		KITS	
6746-6-1-50		KITS	
675002	36536	186	29
676-3-10FR	13908	BULK	
676-3-8FR	83930	BULK	
676-4	00624	BULK	
676-4	00624	KITS	
676-6	00624	BULK	
676-6	00624	KITS	
676-8	00624	BULK	
676-8	00624	KITS	
67711	75250	134	66
6775	83930	112	50
6775	83930	116	1
68-119	81982	135	14
68-119	81982	148	
68-11915	81982	148	30
68-11916	81982	148	29
68-11918	81982	148	17
68-11920	81982	148	23
68-11922	81982	148	22
68-11923	81982	148	11A
68-11924	81982	148	14
68-1660-12	72962	184	
68-1660-26	56878	184	42
68-1660-26	72962	184	27
68-1660-26	72962	184	48
68-18517	81982	148	19
68-18518	81982	148	18
68-18519	81982	148	18A
68-18521	81982	148	22A
68-18532	81982	148	21
68-18533	81982	148	20
68-18536	81982	148	26
68-18540	81982	148	
68-18543	81982	148	17B
68-191-03113	81982	148	27
68-191-03115	81982	148	8
68TM62	56878	184	
680-16-0360	00624	A10	
6820S048	56878	BULK	
69C33	89513	262	53
69C34	89513	262	10
69C36	89513	262	12
69C37	89513	262	11
69C38	89513	262	19A
69178	62983	138	19
698-008-001	26055	221A	
698-008-003	26055	221A	
7-0406-1	62983	138	74
7A	92555	80	22
7BR35	44655	188	
7C1-10	71286	221	6
7C1-10	71286	273	18F
7R12	43334	26	15
70001T1	75250	A36	8
70001T12	75250	A36	4
70001T15	75250	A36	1
70001T16	75250	A36	3
70001T17	75250	A36	5
70001T18	75250	A53	7
70001T19	75250	A35	5
70001T3	75250	A42	7
70001T4	75250	A42	2
70001T5	75250	A37	1
70001T6	75250	A37	4
70001T8	75250	A36	3
701	71286	BULK	
7030	71643	BULK	
70361-12-124	56878	A51	
70362-1216	56878	A51	
70471		KITS	
70471	75250	52	7
70471	75250	105	9
706-001-135	26055	221A	15
706-001-146	26055	221A	14
706-001-256	26055	221A	13
706-002-118	26055	221A	8
7068201	75250	52	1A

REFERENCE NUMBER	MFG CODE	FIG NUMBER	ITEM NUMBER
7068301	75250	105	2
707R	71286	BULK	
7074-12	94641	151	18
7074-12		KITS	
7074-4	94641	151	5
7074-6	94641	151	12
7074-6		KITS	
7074-7	94641	151	17
7074-7		KITS	
7074-8	94641	151	6
70964		KITS	
71-07-11	98391	153	14
71-07-12	98391	153	15
71-07-16-2	98391	153	19
71-07-17	98391	153	16
7100	37940	MSUP	
710312-1	19315	68	60
711	40770	A55	
7110-1-0	81860	188	61
713200	78385	97	13
713200	78385	97	19
713200	78385	97	9
713200	78385	98	9
713200	78385	99	9
71448	75250	105	5
71451	75250	52	8
71509	75250	105	8
71549	75250	52	3
716-006-001	26055	221A	11
716-007-001	26055	221A	3
716-50	89944	170	68
716-50	89944	170	80
716-50	89944	170	95
716-50	89944	171	64
716-50	89944	171	69
71616	75250	105	
71616	75250	KITS	
71717	75250	105	
71717	75250	KITS	
7185-4CN0375	91767	26	
7185-6CNX375	91767	78	46
718719	78385	97	12
718719	78385	97	18
718719	78385	97	8
718719	78385	98	8
718719	78385	99	8
718736	78385	99	1
718739	78385	98	1
718753	78385	97	7C
718768-1	78385	97	22
718768-1	78385	97	5
718768-1	78385	98	12
718768-3	78385	97	21
718768-3	78385	98	11
718768-3	78385	98	4
718768-3	78385	99	11
718768-3	78385	99	4
718768-4	78385	97	6
718769	78385	97	1
718772	78385	97	2
720-001-002	26055	186A	2
72086	91511	18	
72086	91511	213	53
72086	91511	213	53A
72086	91511	220	52
721-0002	07355	75	83
722-001-004	26055	221A	
722-001-005	26055	221A	
722-006-001	26055	221A	1
727	00502	137	45
728-007-001	26055	221A	10
73002105045	89944	170	67
7300565	62983	A31	4
736-004-001	26055	221A	5
736-008-002	26055	186A	3
7387BS	73760	262C	9
7396D	89513	262C	3
74-31	05972	MSUP	
740130-1	19315	204A	130
75-0-120	79963	176	43
75-0-120	79963	177	48
75A95	89513	262	6A
75A95		KITS	
75FP4-832	56878	190	
750156-327	70628	62	
750246-3	19315	204A	145
75257T1	75250	A35	5
75403	75250	52	13
7540704		KITS	
7540704	75250	52	11
7540704	75250	52	15
7540704	75250	52	4
7540704	75250	105	11
7540704	75250	105	7
7540804		KITS	
7540804	75250	52	6
7540804	75250	105	14
754107	75250	52	18
7541407	75250	105	24
75416		KITS	
75416	75250	52	16
75416	75250	105	16
7541901	75250	52	5
7542704	75250	105	18
7542704		KITS	
7542901	75250	52	24
7543004		KITS	
7543004	75250	52	19
7543004	75250	105	25
7543004	75250	105	26
7548104		KITS	
7548104	75250	52	21
75502		KITS	
75514	75250	105	15
75536	75250	52	23
7559401	75250	105	
75613	75250	52	17
75613	75250	105	23
75680		KITS	
7568701	75250	52	20
757-002-001	26055	186A	6
7572301	75250	105	13
75759		KITS	
75800T9	75250	A25	3
75838	75250	105	22
75838		KITS	
759-005-001	26055	221A	2
75934	75250	105	28
75947	75250	105	19
75952	75250	105	1
75953	75250	105	17
75971	75250	52	14
76-0080-1	72914	182A	23
76-0080-3	72914	182A	20
760091-90	31435	193	31
76088	75250	45	29B
76088	75250	52	
7609-37A5-1	06840	117	77
7609-37A5-1	06840	129	137
7609-37A5-1	06840	129	56
7609-37C5-1	06840	117	77
7609-37C5-1	06840	129	137

REFERENCE NUMBER	MFG CODE	FIG NUMBER	ITEM NUMBER
7609-37C5-1	06840	129	56
7609-37M5-2	02987	117	77
7609-37M5-2	02987	129	137
7609-37M5-2	02987	129	56
76144-4	00624	BULK	
76144-4	00624	KITS	
76144-6	00624	BULK	
76144-6	00624	KITS	
76145-4	00624	BULK	
76145-4	00624	KITS	
766	11710	A43	
77C03	89513	251	32
77R3ZC1DR2	43334	216	80
77R3ZC1DR2		KITS	
77R4XR3CJ	43334	248	45
777124-1	19315	165	41
777307-1	19315	165	
78024-4	00624	BULK	
78024-4	00624	KITS	
78024-6	00624	BULK	
78024-6	00624	KITS	
7859		KITS	
7859	89513	262B	2
78948	62983	154	30
79-022-093-0437	72962	190	40
79-048-219-1700	72962	BULK	
79NCFMA2-62	72962	204A	15
7919-24	72914	157	7
7919-24	72914	158	7
7930J0-021	44389	MSUP	
800-515-8	83259	215	35
800399	18876	BULK	
80055-44	73168	MSUP	
801032	18876	MSUP	
8014684	18876	BULK	
803145	19203	MSUP	
80320-2-75	10417	BULK	
8034658-1	18876	BULK	
8034658-22	18876	BULK	
8034658-23	18876	BULK	
8034661-64	18876	BULK	
805	00502	137	45
805600	18876	MSUP	
8098E	15818	189	22
8098E	16170	189A	56
8098E	16170	189A	96
809847	19203	MSUP	
809850	19203	MSUP	
81-0346-3	72914	182A	21
81-0616-1	72914	182A	11A
81-0618-1	72914	182A	9
81-0618-2	72914	182A	4
81-0625-1	72914	182A	25
81-0625-3	72914	182A	27
81-0626-1	72914	182A	48
81-0628-1	72914	182A	26
81-0630-1	72914	182A	24
81R4293	89513	262C	1
812251	19315	165	53
812252	19315	165	99
812253	19315	165	83
812254	19315	165	2
812263	99251	165	73
812264	19315	165	75
812265	19315	165	
812266	19315	165	94
812267	19315	165	80
812268	19315	165	63
812269	19315	165	24
812270	19315	165	95
812272	19315	165	81
812273	19315	165	79
812278	19315	165	96
812279	19315	165	92
812280	19315	165	90
812281	19315	165	91
812282	19315	165	21
812284	19315	165	88
812285	99251	165	19
812286	19315	165	22
812289	99251	165	5
812290	99251	165	9
812291	19315	165	33
812292	19315	165	35
812295	99251	165	31
812296	99251	165	36
812297	99251	165	29
812298	99251	165	28
812299	19315	165	27
812300	19315	165	
812300	19315	165	23
812301	19315	165	25
812304	19315	165	89
812305	19315	165	87
812306	19315	165	93
812307	19315	165	67
812307	19315	165	76
812307	19315	173	53
812307	19315	173	8
812307	19315	176	13
812307	19315	176	21
812307	19315	177	12
812307	19315	177	20
812309	19315	165	16
812311	19315	165	59
812312	99251	165	61
812313	19315	165	54
812315	99251	165	56
812316	19315	165	51
812321	19315	165	50
812322	19315	165	30
812323	19315	165	48
812324	19315	165	46
812325	19315	165	47
812327	99251	165	44
812328	19315	165	45
812329	19315	165	42
812330	19315	165	43
812332	99251	165	7
812335	19315	165	78
812336	19315	165	8
812402	19315	165	86
814368	18876	MSUP	
8161819	18876	57	16A
8161819	18876	58	15A
8169S9	19203	MSUP	
819NMG	75595	28	35
8195-21	99643	129	54
82A16	89513	261	26
82A50	89513	261	6
82A52	89513	261	11
82A54	89513	261	12
826-12D	00624	KITS	
826-16D	00624	KITS	
826-20D	00624	KITS	
826-8D	00624	KITS	
8274A	78285	95	114
8274A	78385	97	
8275B	78385	95	39
8275B	78385	98	
829475	19203	BULK	
83-7	80049	BULK	

REFERENCE NUMBER	MFG CODE	FIG NUMBER	ITEM NUMBER
83A83		262	3
83A83	89513	262	8
83A83		KITS	
83611	00502	137	27
83612	00502	137	29
83614	00502	137	17
83615	00502	137	16
83618	00502	137	21
83630	00502	137	8
837016	19203	MSUP	
83781	00502	137	34
8401-102	92065	155	5
8401-104	92065	155	6
8401-110	92065	155	4
8401-110		KITS	
8401-111	92065	155	8
8401-111		KITS	
8401-112	92065	155	10
8401-112		KITS	
8401-141	92065	155	
841155	33525	258	12A
8421-031-010	14775	155	
8421-031-010	14775	KITS	
8421-100---	14775	155	11
8421-101	92065	155	7
8421-103	92065	155	1
8421-107	92065	155	2
8425-031	91699	119	393
8425-031	14775	155	
8425-031-010	14775	155	
8425-031-010	14775	KITS	
8425-100	14775	155	11
8425-101	92065	155	7
8425-102	92065	155	5
8425-103	92065	155	1
8425-104	92065	155	6
8425-107	14775	155	2
8425-109	92065	155	4
8425-109		KITS	
8425-111	92065	155	8
8425-111		KITS	
8425-112	92065	155	10
8425-112		KITS	
8450-03	94120	183A	70
8450-03	94120	204A	109
8450-03	94120	204A	166
8450-03	94120	204A	170
8450-03	94120	204A	22
85220630020	89944	170	76A
85220630040	89944	170	58
85220630060	89944	170	79
85220630070	89944	170	82
85220630080	89944	170	87A
85220630090	89944	170	89A
85220630101	89944	170	
85220630150	89944	170	
85220630160	89944	170	65
85220630170	89944	170	
855SER2-0	08717	203	29
8635993	19200	BULK	
86703	62983	266	26
86703	62983	267	48
87220630010	89944	170	39
87220630010	89944	170	54A
87261	62983	154	26
87262	62983	63	81
87262	62983	154	15
87263	62983	154	25
87268	62983	154	16
873364	33525	258	12A
87614	62983	266	27
8783476	19203	BULK	
8790670-1	19203	MSUP	
8790672	19203	MSUP	
8790674	19203	MSUP	
88-5272PT2	49956	BULK	
88A78	89513	262	
880112-12D	00624	KITS	
880112-16D	00624	KITS	
880112-20D	00624	KITS	
880114-20D	00624	KITS	
880114-4	00624	KITS	
880629-10D	00624	BULK	
88133	62983	274	21
89A22	58588	261	31
890B2-654	83527	MSUP	
8908413	18876	184	
891635	33525	258	12
892868	33525	258	12
9-196-650	81923	34	26
9-196-650	81923	34	6
9C	37676	MSUP	
9SPB85-7	29666	BULK	
90A30	89513	261	24
900591A14C	00624	BULK	
900628-10	00624	BULK	
900628-10	00624	KITS	
900628-4	00624	BULK	
900628-4	00624	KITS	
9007316	18876	MSUP	
901	75543	192	87
902-290-1	00624	117	3A
902-290-1	00624	119	
902-462-1	98625	115	43
902-475-1	98625	115	42
902-7	86579	197	2
9024-1-12	70236	119	
9031917	18876	BULK	
90498	62983	138	17
905	75543	192	11
906D874-3	83843	252	10
9060184	18876	MSUP	
908D324-1	83843	215	
91-6012-1500-00	95354	182A	31
91S2-66W0	71286	31	
911C259-1	83843	215	40
91152-7	13636	287	17
91152-8	13636	284	13
91152-8	13636	285	14
91152-8	13636	285	55
91152-8	13636	286	27
91152-8	13636	287	9
91153-3	13636	286	7
914201	62983	154	
917-238S	98625	117	
917-238S	98625	129	
9177178	18876	BULK	
92-018	71984	MSUP	
92-1660-26	72962	192	26
9205316	18876	MSUP	
9206H	38443	248	67
92101020000	19315	68	68
92101030000	19315	165	18
92101030000	19315	165	58
92101030000	19315	165	85
92101030000	19315	165	98
921070	62983	BULK	
921072	62983	BULK	
92219	62983	63	30
92231006313	19315	183A	32A

REFERENCE NUMBER	MFG CODE	FIG NUMBER	ITEM NUMBER
9229-4457	00614	196	27
92341040300	19315	183A	18
92341040700	19315	183A	49
92341060500	19315	183A	84
92341060800	19315	183A	46
92341080400	19315	183A	33
92341080600	19315	183A	85
92411122312	19315	68	82
92411210212	19315	183A	35
925-11	14672	37	
92511100800	19315	183A	12
92521030300	19315	68	58
92521030400	19315	68	57
92521040500	19315	68	17
92522040500	19315	68	12
92522040500	19315	68	39
92522040600	19315	68	14
92522040800	19315	68	40
92531040800	19315	183A	16
92531080900	19315	183A	28
92551020400	19315	68	67
92551020500	19315	204A	157
92551030300	19315	183A	81A
92551030400	19315	183A	57
92551040300	19315	204A	135
92551040400	19315	183A	69
92551040500	19315	68	24
92551040500	19315	183A	1
92551040500	19315	183A	66
92551040500	19315	183A	9
92551040500	19315	204A	168
92551040500	19315	204A	20
92551040500	19315	204A	6
92551040800	19315	204A	10
92551060500	19315	204A	13
92551060700	19315	204A	15A
92551060800	19315	204A	1
92551060800	19315	204A	127
92701040000	19315	68	41
92701060000	19315	204A	128
93A91	89513	261	36
93334	62983	266	22
93334	62983	267	29
94C34	89513	KITS	
94C34	89513	262B	
942-11	14672	37	20
943-11	14672	37	30
943-11	14672	37	7
948031-1154	06481	MSUP	
95-204630-609	05972	MSUP	
95-204680-0079	58854	MSUP	
95111413933	19315	204A	116
9521864	73842	56	12
9522159	73842	57	4
9522329	73842	56	5
9522728	73842	57	5
9523463	73842	55	14
9523759	73842	56	11
9523813	73842	55	10
9523892	73842	57	3
9524861	73842	55	1
9525021	73842	58	19
9525029	73842	50	13
9525029	73842	55	16
9525032	73842	57	11
9525033	73842	58	10
9525034	73842	58	2
9525035	73842	58	7
9525054	73842	56	1
9532589	73842	44	13
9532589	73842	58	
9532607	73842	55	11
9532608	73842	55	4
9532612	73842	56	8
9532626	73842	57	7
9532628	73842	58	6
9532629	73842	58	3
9532631	73842	58	1
9532714	73842	57	1
9533594	73842	57	15
9533594	73842	58	14
9535174	73842	50	14
9535175	73842	50	9
9536242	73842	57	2
9541634	73842	43	10
9541634	73842	55	
9541635	73842	43	14
9541635	73842	45	8D
9541635	73842	57	
9543175	73842	50	1
9543362	73842	43	10
9543362	73842	45	68
9543362	73842	50	
9543413	73842	50	11
9543414	73842	50	8
9543601	73842	43	14
9543601	73842	45	8D
9543601	73842	57	
9543602	73842	44	9
9543602	73842	56	
9543604	73842	56	6
955-4	80049	BULK	
9555A	74144	207	20
9555A	77138	207	23
9555A	74144	207	4
9555A	74144	208	13
956C453-1	83843	215	63
956C454-1	83843	215	
956C456-1	83843	215	54
956C457-1	83843	215	59
967-100	89944	170	70
967-100	89944	171	66
967-936	89944	170	94
97-3106A8S1S496	02660	196	
9775CA	73760	216	41
9775VC	73760	216	41
9778BN	73760	216	59
9778C	73760	216	59
9779C	73760	216	49
9784B		KITS	
9784B	73760	216	40
9785C	73760	216	26
9785D	73760	216	23
9785K	73760	216	23
9785M	73760	216	23
9785V	73760	216	23
9785X	73760	216	23
9792B		216	43
9792B		KITS	
9792L	73760	216	43
98A04	89513	261	5
98464	62983	154	13
99-0806-002	93712	248	14
990	87889	MSUP	
99200300503	19315	68	7
99200507513	19315	204A	48
99445	62983	266	45
99785-2	61864	32	
99785-2	61864	32	38
99840-2-120	90763	32	
99840-2-120	90763	32	38
999077	96124	150	7

REFERENCE NUMBER	MFG CODE	FIG NUMBER	ITEM NUMBER	REFERENCE NUMBER	MFG CODE	FIG NUMBER	ITEM NUMBER
99967C098	90763	18					
99967C098	90763	32					
99967C098	90763	32	38				

By Order of the Secretary of the Army:

FRED C. WEYAND
General, United States Army
Vice Chief of Staff

Official:
VERNE L. BOWERS
Major General, United States Army
The Adjutant General

DISTRIBUTION:

To be distributed in accordance with DA Form 12-31 Direct and General Support Maintenance Requirements for CH-47A, CH-47B and C aircraft.

☆ U.S. GOVERNMENT PRINTING OFFICE: 1974-665-314/16 REG.#6